79023648A
October, 2005

Challenger®

Parts Manual

MT800 SERIES TRACK TRACTORS

MT835 (BAM40001-59999)
MT845 (BBP40001-59999)
MT855 (BCC40001-59999)
MT865 (BDS40001-59999)
9YY1 - Up (Transmission)
AZG1 - Up (Axle)
AZH1 - Up (Axle)
AZJ1 - Up (Axle)
AZK1 - Up (Axle)

ALPHABETICAL INDEX

The complete alphabetical index appears at the beginning of this publication. It is used to locate major groups, assemblies and components.

NUMERICAL INDEX

The numerical index of this publication follows the Alphabetical Index at the beginning of the publication and indicates at which grid location and page number a part number appears.

ILLUSTRATIONS

All illustrations are located on the left hand page with the text on the right. Except for some common hardware, all parts are identified with an item number which corresponds to the ìitemî column on the text page. This is followed by the parts number, quantity and description.

HARDWARE

Common hardware not identified such as bolts, nuts, cotter pins and lube fittings, are listed indented in the text beneath the item to which they attach or fit. Common hardware listed indented beneath an item is NOT included unless specified. Example: (Incl. BOLT, LOCKWASHER AND NUT).

ORDERING PARTS

Be sure to refer to both the text and the illustration to assure ordering the correct part.

RECOMMENDED DEALER STOCK

A recommended dealer stock listing appears at the end of this publication.

AGCO

AIR INLET AND EXHAUST SYSTEM

AIR CLEANER AS-BASIC - 192-8980 MT835 & MT845 155
AIR CLEANER AS-BASIC - 196-4056 (MT855 & MT865) 157
AIR CLEANER GP - 172-5337 (MT855 & MT865) 151
AIR CLEANER GP - 172-5338 MT835 & MT845 153
LINES GP-AIR - 172-5341 MT855 & MT865 161
LINES GP-AIR - 172-5342 MT835 & MT845 159
LINES GP-EJECTOR - 197-4849 MT855 & MT865 165
LINES GP-EJECTOR - 212-4444 MT835 & MT845 163
MUFFLER GP - 172-5335 MT855 & MT865 169
MUFFLER GP - 172-5336 MT835 & MT845 167
SHIELD GP-EXHAUST - 218-2883 EAME - ITALIAN MARKET 149

BRAKING SYSTEM

BRAKE AR - 185-8860 AIR TRAILER (WITHOUT HITCH) MT835 & MT845 EAME ONLY 717
BRAKE AR - 186-1620 AIR TRAILER (WITHOUT HITCH) EAME ONLY 719
BRAKE AR - 192-6390 AIR TRAILER (WITH HITCH) MT855 & MT865 723
BRAKE AR-AIR - 192-6400 WITH HITCH MT835 & MT845 EAME ONLY 721
BRAKE GP-PARKING - 210-7510 731
CONTROL GP-PARKING BRAKE - 172-6857 EAME ONLY 733
CONTROL GP-PARKING BRAKE - 192-6350 737
CONTROL GP-PARKING BRAKE - 192-6360 SECONDARY EAME ONLY 735
CONTROL GP-SERVICE BRAKE - 200-4400 739
CYLINDER GP-MASTER - 184-5338 SERVICE BRAKE 743
KIT HYDR TRAILER BRAKE - 209-3689 WITH 3 POINT HITCH EAME ONLY 729
KIT-HYD BRAKE - 501140D1 WITHOUT 3 POINT HITCH SPECIAL APPLICATIONS 727
KIT-HYD TRAILER BRAKE - 209-3688 WITHOUT 3 POINT HITCH EAME ONLY 725
LINES & CONTROL GP (KIT) - 190-0436 AIR TRAILER BRAKE
(WITHOUT HITCH) (EAME ONLY) 751
LINES & CONTROL GP - 190-0436 AIR TRAILER BRAKE (WITHOUT HITCH) (EAME ONLY) 753
LINES GP-BRAKE - 163-0386 745
LINES GP-BRAKE - 193-1547 COMMON 747
LINES GP-CONTROL (KIT) - 200-4310 AIR TRAILER BRAKE (WITH HITCH) EAME ONLY 755
LINES GP-CONTROL (KIT) - 210-4310 AIR TRAILER BRAKE (WITH HITCH) EAME ONLY 757
LINES GP-SERV BRAKE (B) - 185-8787 EAME ONLY 741
SUPPORT GP-LINES - 200-4320 EAME ONLY 759
TANK & LINES GP-AIR - 190-0435 761
TANK AR-AIR - 190-0439 MT835 & MT845 EAME ONLY 763
TANK AR-AIR - 190-0440 MT855 & MT865 EAME ONLY 765
TANK AR-AIR - 210-5703 MT835 & MT845 ROW & SPECIAL ONLY 767
TANK AR-AIR - 210-5704 MT855 & MT865 ROW & SPECIAL ONLY 769
VALVE GP-ACCUMULATOR CHARGING - 216-6972 771
VALVE GP-PARKING BRAKE - 200-4351 773

COOLING SYSTEM

COOLER GP & MOUNTING - 190-1482 127
CORE & MOUNTING GP - 229-8899 129
FAN GP - 206-6397 ENGINE 131
GUARD GP-FAN - 228-4631 MT835 & MT845 141
GUARD GP-FAN - 228-4632 MT855 & MT865 143
GUARD GP-FAN BLAST - 500038D1 139
LINES GP-COOLANT - 172-5344 135
LINES GP-COOLANT - 172-5345 MT835 & MT845 133
LINES GP-TURBOCHARGER - 503583D1 S/N: EFF 3/14/05 137
TANK GP-EXPANSION & COOLANT - 185-2220 MT855 & MT865 147
TANK GP-EXPANSION & COOLANT - 194-7966 MT835 & MT845 145

DECALS & MARKINGS

DECAL SHEET-COMPLETING AR - 501513D1 ENGLISH 1243
DECAL SHEET-COMPLETING AR - 501514D1 DUTCH 1245
DECAL SHEET-COMPLETING AR - 501515D1 FRENCH 1247
DECAL SHEET-COMPLETING AR - 501516D1 JAPANESE 1249
DECAL SHEET-COMPLETING AR - 501517D1 PORTUGUESE 1251

DECALS & MARKINGS (CONTINUED)

DECAL SHEET-COMPLETING AR - 501518D1 RUSSIAN 1253
DECAL SHEET-COMPLETING AR - 501519D1 SPANISH 1255
DECAL SHEET-VEHICLE 501505D1 EAME ONLY 1241
DECAL SHEET-VEHICLE - 501503D1 1237
DECAL SHEET-VEHICLE - 501504D1 1239
FILM GP - & PLATES - 179-2185 ROW & SPECIAL (PAGE 1 OF 5) 1227
FILM GP - & PLATES - 179-2185 ROW & SPECIAL (PAGE 2 OF 5) 1229
FILM GP - & PLATES - 179-2185 ROW & SPECIAL (PAGE 3 OF 5) 1231
FILM GP - & PLATES - 179-2185 ROW & SPECIAL (PAGE 4 OF 5) 1233
FILM GP - & PLATES - 179-2185 ROW & SPECIAL (PAGE 5 OF 5) 1235
FILM GP-CAT - 500735D1 1205
FILM GP-CHALLENGER - 500736D1 1207
FILM GP-MT835 - 500744D1 1195
FILM GP-MT845 - 500745D1 1197
FILM GP-MT855 - 500746D1 1199
FILM GP-MT865 - 500747D1 1201
FILM GP-PAINT & - 179-2261 EAME ONLY (PAGE 1 OF 9) 1209
FILM GP-PAINT & - 179-2261 EAME ONLY (PAGE 2 OF 9) 1211
FILM GP-PAINT & - 179-2261 EAME ONLY (PAGE 3 OF 9) 1213
FILM GP-PAINT & - 179-2261 EAME ONLY (PAGE 4 OF 9) 1215
FILM GP-PAINT & - 179-2261 EAME ONLY (PAGE 5 OF 9) 1217
FILM GP-PAINT & - 179-2261 EAME ONLY (PAGE 6 OF 9) 1219
FILM GP-PAINT & - 179-2261 EAME ONLY (PAGE 7 OF 9) 1221
FILM GP-PAINT & - 179-2261 EAME ONLY (PAGE 8 OF 9) 1223
FILM GP-PAINT & - 179-2261 EAME ONLY (PAGE 9 OF 9) 1225
WARNING GP-SLOW MOVING VEHICLE 172-8886 1203

DIFFERENTIAL STEERING SYSTEM

CONTROL GP-SECONDARY STEERING - 166-4623 EAME ONLY 779
CONTROL GP-STEERING (BASIC) - 217-9780 777
CONTROL GP-STEERING - 217-9779 775
HEAD GP-MOTOR - 203-1213 793
HEAD GP-PUMP - 205-6398 781
MOTOR & MOUNTING GP - 172-4517 STEERING EAME ONLY 785
MOTOR & MTG GP-STEERING - 158-2404 ROW & SPECIAL ONLY 783
MOTOR GP-PISTON - CH162-9601 STEERING 787
MOTOR GP-PISTON - CH162-9602 STEERING 789
ROTATING GP-MOTOR - 203-0189 STEERING 791

DRAWBAR, THREE POINT HITCH AND PTO

ADAPTER GP-PLUG - 180-4039 ROW AND SPECIAL APPLICATIONS 947
CONTROL AR-DRAWBAR - 184-5033 POWERED DRAWBAR 949
CONTROL AR-DRAWBAR - 210-7489 WIDE SWING 951
COUPLER GP-QUICK - 179-3318 CATEGORY 3 & 4 NARROW 957
COUPLER GP-QUICK - 180-6640 CATEGORY 4 959
CYLINDER AS-STEERING - CH189-6001 967
CYLINDER AS-0102-0408-Y CH189-4911 101.6MM X 408MM (4 X 16.06") 965
CYLINDER GP - CH184-5034 961
CYLINDER GP-STEERING - 183-4396 963
DRAWBAR GP-SWINGING 210-7507 971
DRAWBAR GP-WIDE SWINGING - 180-4036 969
GUARD GP-CYLINDER - 200-8772 POWERED DRAWBAR 975
GUARD GP-POWER TAKE-OFF - 183-4470 1013
HITCH AR - 179-0851 WIDE SWINGING DRAWBAR 953
HITCH AR-NON AG - 179-0853 955
HITCH AR-3 POINT (FIELD) - 169-0028 CATEGORY 4-W/O HYD TRAILER BRAKES 979
HITCH AR-3 POINT (FIELD) - 186-0979 CATAGORY 3&4 NARROW-
W/HYD TRAILER BRAKES EAME ONLY 985
HITCH AR-3 POINT (FIELD) - 189-3300 CATEGORY 4-
W/HYDRAULIC TRAILER BRAKES EAME ONLY 987
HITCH AR-3 POINT - 169-0027 CAT 3 & 4 NARROW-W/O HYD TRAILER BRAKES 977
HITCH AR-3 POINT - 179-0852 CATEGORY 3/4 W/STEERABLE 981
HITCH AR-3 POINT - 180-6639 CATEGORY 4 W/STEERABLE 983
HITCH GP-3 POINT - 179-3317 CATEGORY 3/4 989

DRAWBAR, THREE POINT HITCH AND PTO (CONTINUED)

HITCH GP-3 POINT - 184-5065 CATEGORY 4 991
LINES GP-CYLINDER - 158-2363 3 POINT HITCH 993
LINES GP-CYLINDER - 180-0503 POWERED DRAWBAR 997
LINES GP-POWER TAKE-OFF - 189-2976 999
LINK GP-LIFT 186-1090 1001
LINK GP-UPPER 186-1091 1003
MOUNTING GP-CYLINDER - 184-5035 CONTROLLED DRAWBAR 1005
PLUG GP-3 PT-HITCH - 224-9662 DRAWBAR HITCH APPLICATIONS 1007
POWER TAKE-OFF (KIT) - 163-0400 ROW & SPECIAL APPLICATIONS 1009
POWER TAKE-OFF (KIT) - 224-8603 EAME 1011
ROCKSHAFT GP - 186-1063 1015
SUPPORT GP-DRAWBAR - 180-4038 SCRAPER HITCH 1017
SUPPORT GP-DRAWBAR - 210-7508 ROW AND SPECIAL APPLICATIONS 1019
SUPPORT GP-FRAME - 210-7509 CONTROLLED DRAWBAR 1021

ELECTRICAL AND STARTING SYSTEM

ANTENNA GP-DATA RADIO - 501124D1 GPS BASE STATION 337
BATTERY & WIRING GP - 136-5658 3 BATTERIES
WITHOUT DISCONNECT SWITCH MT835 & MT845 197
BATTERY & WIRING GP - 136-5662 4 BATTERIES WITHOUT DISCONNECT SWITCH 199
BATTERY & WIRING GP - 136-5663 4 BATTERIES WITH DISCONNECT SWITCH 201
BATTERY GP - 136-5659 3 BATTERY W/DISCONNECT SWITCH 205
BLOCK AS-FUSE 501830D1 291
BLOCK AS-FUSE 501831D1 293
BLOCK AS-FUSE 501832D1 295
BLOCK AS-FUSE 501833D1 297
BLOCK AS-FUSE 501834D1 299
BLOCK AS-FUSE 501835D1 301
BLOCK AS-FUSE - 501829D1 289
CIRCUIT BREAKER GP - 136-5654 ELECTRONIC CONTROL MODULE 207
CONTROL & WIRING GP - 136-5670 209
CONTROL & WIRING GP-HITCH - 136-5378 LIFT CIRCUIT 211
CONTROL AR - AUTOGUIDE SYSTEM 500628D1 217
CONTROL AR-COMMUNICATION - 216-0852 ISO 213
CONTROL AR-MACHINE - 216-0874 ISO READY UPGRADE 215
CONTROL GP-ELECTRONIC 501033D1 279
CONTROL GP-POWER TAKE-OFF - 152-0446 ROW 221
CONTROL GP-POWER TAKE-OFF - 224-5884 EAME 223
CONTROL GP-UNPROGRAMMED 216-0658 229
ELECTRONICS GP-IMPLEMENT - 229-0891 (SOFTWARE) 3 POINT HITCH 227
ELECTRONICS GP-MACHINE - ISO 216-0614 231
FUSE GP - 169-6380 285
FUSE GP-CLAAS - 172-6841 EAME ONLY 287
HEATER GP-JACKET WATER-120V - 215-1802 MT835 & MT845 ROW & SPECIAL ONLY 233
HEATER GP-JACKET WATER-120V - 215-1807 MT855 & MT865 ROW & SPECIAL ONLY 235
HEATER GP-JACKET WATER-240V - 215-1808 MT835 & MT845 EAME ONLY 237
HEATER GP-JACKET WATER-240V - 215-1809 MT855 & MT865 EAME ONLY 239
HEATER GP-TRANSMISSION-120V 163-0402 ROW & SPECIAL ONLY 241
HEATER GP-TRANSMISSION-240V 163-0403 EAME ONLY 243
KIT CONTROL AR-AUTOGUIDE SYSTEM 500630D1 FIELD INSTALLED 219
KIT-GPS BASE STATION - 502609D1 335
KIT-LIGHTING - 500650D1 CONVERT STD TO DELUXE ROW AND SPECIAL APPLICATIONS 253
KIT-LIGHTING - 500651D1 CONVERT STD TO HID ROW AND SPECIAL APPLICATIONS 255
KIT-LIGHTING - 500652D1 CONVERT DELUXE TO HID ROW AND SPECIAL APPLICATIONS 257
KIT-PTO SWITCH ADAPTOR 502423D1 225
LAMP GP-HOOD - 12V HALOGEN 500775D1 259
LAMP GP-HOOD-12V HID 500776D1 261
LIGHT AS - COURTESY - 12V 501935D1 245
LIGHTING GP-ROAD (LH TRAFFIC) 168-6580 FIELD INSTALLED EAME ONLY 275
LIGHTING GP-ROAD (RH TRAFFIC) 168-6581 FIELD INSTALLED EAME ONLY 277
LIGHTING GP-SIGNAL - 12V 136-5665 265
LIGHTING GP-SIGNAL - 136-5429 EAME ONLY 269

ELECTRICAL AND STARTING SYSTEM (CONTINUED)

LIGHTING GP-SIGNAL - 216-0806 EAME ONLY 267
LIGHTING GP-WARNING - 12V 162-4101 273
LIGHTING GP-WARNING - 216-9823 271
LIGHTING GP-12V DELUXE - 500646D1 249
LIGHTING GP-12V HID - 500647D1 251
LIGHTING GP-12V STD - 500645D1 ROW AND SPECIAL APPLICATIONS 247
MOUNTING GP-BATTERY - 142-9739 4 BATTERIES 283
MOUNTING GP-BATTERY - 142-9760 3 BATTERIES 281
MOUNTING GP-GPS - 500478D1 AUTOGUIDE SYSTEM 325
MOUNTING GP-KIT - 187-4896 AUX ANTENNA & NON-AUTOGUIDE GPS RECEIVER 327
MOUNTING GP-PDA - 501168D1 AUTOGUIDE SYSTEM 333
RECEIVER GP-TRANSMITTER & GPS - 500607D1 AUTOGUIDE CONTROL 339
RECEIVER KIT-TRANSMITTER - 162-4099 331
SENSOR & MTG GP-GROUND SPEED 136-5388 303
SENSOR & MTG GP-GROUND SPEED 136-5404 EAME 305
SENSOR GP-PRESSURE - CH161-9932 395
SERVICE GP-AUTOGUIDE - 500389D1 323
STARTING AID GP-ETHER - 187-1740 MT855 & MT865 309
STARTING MOTOR AS-ELECTRIC - 502284D1 12 VOLT MT835 & MT845 315
STARTING MOTOR GP-ELECTRIC - 180-2924 MT855 & MT865 313
STARTING MOTOR GP-ELECTRIC - 208-0090 12 VOLT MT835 & MT845 311
STARTING MOTOR GP-ELECTRIC - 502282D1 12 VOLT MT855 & MT865 317
STARTING MOTOR GP-ELECTRIC - 502283D1 12 VOLT MT855 & MT865 319
STATING AID GP-ETHER - 186-1671 MT835 & MT845 307
SWITCH GP-GUIDANCE - 500606D1 AUTOGUIDE SYSTEM 321
SWITCH GP-WIPER - CH135-9967 INTERMITTENT 12 VOLT 329
VALVE GP-ETHER - 210-8961 MT835 & MT845 341
VALVE GP-ETHER - 211-8220 MT855 & MT865 343
WARNING GP-BACKUP - 195-5968 345
WIRING GP - 214-3504 AUTOGUIDE ISO COMPATIBLE 349
WIRING GP REMOTE CONTROL - 173-6505 ROW & SPECIAL APPLICATIONS 347
WIRING GP-AUXILIARY - 162-4097 351
WIRING GP-CAB - 152-0005A EAME ONLY 359
WIRING GP-CAB - 152-0005B EAME ONLY 361
WIRING GP-CAB - 152-0420 1 OF 2 ROW & SPECIAL APPLICATIONS 353
WIRING GP-CAB - 152-0420 2 OF 2 ROW & SPECIAL APPLICATIONS 357
WIRING GP-COMPACT DISC CHANGER 195-9532 365
WIRING GP-CONSOLE - 136-5477 WITHOUT PTO 369
WIRING GP-CONSOLE - 166-1211 ARMREST W/PTO 367
WIRING GP-CONSOLE - 168-1946 (AUX POWER CLAAS) EAME ONLY 371
WIRING GP-MACHINE - 136-5668 375
WIRING GP-SHUTOFF - 162-4096 ENGINE 387
WIRING GP-SHUTOFF - 173-6501 TIME DELAY LIGHTING SHUTOFF 389
WIRING GP-TRAILER - 162-4102 CONNECTOR SWITCHES ROW & SPECIAL 391
WIRING GP-TRAILER - 168-1945 CONNECTOR SWITCHES EAME 393
WIRING GP-TRAILER JUMPER - 501940D1 363
WIRING GP-VEHICLE - 136-5668 373
WIRING GP-VEHICLE - 136-5669 1 OF 3 EAME ONLY 379
WIRING GP-VEHICLE - 136-5669 2 OF 3 EAME ONLY 381
WIRING GP-VEHICLE - 136-5669 3 OF 3 EAME ONLY 383
WORK LIGHT-HID 500634D1 & 500635D1 263

ENGINE INSTALLATION ARRANGEMENT

AIR COMPRESSOR GP - 180-2937 MT835 & MT845 93
AIR COMPRESSOR GP - 215-8055 97
COMPRESSOR GP-AIR - 500970D1 MT855 & MT865 99
DRIVE GP-ACCESSORY - 187-1791 105
DRIVE GP-FAN - 193-2265 MT855 109
DRIVE GP-FAN - 193-2266 MT835 & MT845 107
DRIVE GP-FAN - 197-5675 MT865 111
INSTALLATION AR-MT835 - 172-5361 ROW & SPECIAL APPLICATIONS 77

ENGINE INSTALLATION ARRANGEMENT (CONTINUED)

INSTALLATION AR-MT835 - 187-1741 EAME ONLY 79
INSTALLATION AR-MT845 - 172-5362 ROW & SPECIAL APPLICATIONS 81
INSTALLATION AR-MT845 - 187-1742 EAME ONLY 83
INSTALLATION AR-MT855 - 172-5363 ROW & SPECIAL APPLICATIONS 85
INSTALLATION AR-MT855 - 187-1743 EAME ONLY 87
INSTALLATION AR-MT865 - 172-5364 ROW & SPECIAL APPLICATIONS 89
INSTALLATION AR-MT865 - 187-1744 EAME ONLY 91
MOUNTING GP-ALTERNATOR - 206-6987 113
MOUNTING GP-ENGINE - 172-5333 117
MOUNTING GP-ENGINE - 172-5334 MT835 & MT845 115
MOUNTING GP-REFRIGERANT COMPR - 187-1792 119
PULLEY GP - 185-2237 MT835 & MT845 121
PULLEY GP - 185-2239 FAN BELT TIGHTENER MT855 123
PULLEY GP - 185-2240 FAN BELT TIGHTENER MT865 125

FRAME AND BODY

BRACE GP-SAFETY - 222-9033 HOOD ROW & SPECIAL 605
CHASSIS AR - 179-1953 547
COUNTERWEIGHT GP - 185-8688 ROLLER FRAME (1393KG/3071 LB) ROW AND EAME 551
COUNTERWEIGHT GP - 185-8690 ROLLER FRAME (2786KG/6142 LB) ROW AND EAME 553
COUNTERWEIGHT GP-FRONT - 184-5329 20 WEIGHTS (1440KG/3175LB) ROW ONLY 559
COUNTERWEIGHT GP-FRONT - 184-5357 32 WEIGHTS (2000KG/4409LB) 563
COUNTERWEIGHT GP-FRONT - 502116D1 6 WEIGHTS (963KG/2063LB) EAME ONLY 555
COUNTERWEIGHT GP-FRONT - 502117D1 16 WEIGHTS (1403KG/3091LB) EAME ONLY 557
COUNTERWEIGHT GP-FRONT - 502118D1 28 WEIGHTS (1963KG/4328LB) EAME ONLY 561
COUNTERWEIGHT GP-IDLER - 177-4588 (909KG/2000LB) 565
COUNTERWEIGHT GP-IDLER - 178-8047 (1575KG/3500LB) 567
COUNTERWEIGHT GP-IDLER - 185-8720 (2043KG/4500LB) 569
COVER GP-ACCESS - 190-5943 571
EXTENSION GP-FENDER - 186-2427 EAME ONLY 577
FENDER GP - 161-9174 ROW & SPECIAL 573
FENDER GP - 161-9177 EAME ONLY 575
FRAME GP - 179-1954 (MT835 & MT845) 579
GRILL GP-RADIATOR - 158-5960 581
GUARD GP - 187-8609 EAME ONLY 583
GUARD GP-BOTTOM - 185-8849 585
GUARD GP-BOTTOM - 200-8826 FOR USE WITH 197-8558 AUX FUEL TANK AR 587
GUARD GP-BOTTOM - 213-2481 REAR 589
GUARD GP-POWER TRAIN - 189-5805 (MT835 & MT845) 591
HANDHOLD GP - 203-9179 INNER 593
HANDHOLD GP - 221-8534 EAME ONLY 623
HOOD & GUARD GP - 156-1313 ROW & SPECIAL 597
HOOD & GUARD GP - 161-9173 1 OF 2 EAME ONLY 601
HOOD & GUARD GP - 161-9173 2 OF 2 EAME ONLY 603
KIT-MOUNTING - 208-7698 FIRE EXTINGUISHER ROW & SPECIAL 607
MOUNTING GP-BODY - 158-5925 LICENSE PLATE EAME ONLY 613
MOUNTING GP-CAB - 162-4112 611
MOUNTING GP-COUNTERWEIGHT - 184-5337 (504KG/1112 LB) ROW ONLY 549
MOUNTING GP-MONITOR - 222-7965 615
MOUNTING GP-WITH FIRE EXTINGUISHER 501785D1 EAME ONLY 609
PANEL GP-ENCLOSURE (CAT) - 210-4350 617
PLUG GP-COUNTERWEIGHT - 183-5789 COMPLETING 619
REFLECTOR GP - 215-7336 FOR USE WITH DRAWBAR EAME 635
REFLECTOR GP - 215-9580 FOR USE WITH HITCH EAME 637
STEP GP - 156-1327 621
SUPPORT GP-COMPONENT - 190-5441 631
SUPPORT GP-FUEL TANK - 186-5431 1 OF 2 625
SUPPORT GP-FUEL TANK - 186-5431 2 OF 2 627
TOW CABLE GP - 500039D1 595
WALKWAY GP - 183-6384 633

FUEL SYSTEM

CONTROL GP-DECELERATOR - 152-0447 171
CONTROL GP-GOVERNOR - 207-2031 173
FILTER GP-WATER SEP & FUEL - 198-0187 MT855 & MT865 177
FILTER GP-WATER SEP & FUEL - 198-0188 MT835 & MT845 175
LINES GP-FUEL - 179-2183 MT855 & MT865 181
LINES GP-FUEL - 197-1317 183
LINES GP-FUEL - 213-9315 MT835 & MT845 179
TANK & MTG GP-FUEL - 179-2182 185
TANK AR-FUEL - 197-8558 AUXILIARY 94.8 LITERS (25 GALLONS) 187
TANK GP-FUEL - 186-5432 1155 LITERS (305 GALLONS) 189
TANK GP-FUEL - 196-7742 RIGHT HAND 191
TANK GP-FUEL - 206-8891 94.63 LITERS (25 GALLONS) 195
TANK GP-FUEL - 500016D1 LEFT HAND 193

HYDRAULIC SYSTEM

ACTUATOR GP-PISTON PUMP - CH183-8430 795
CASE DRAIN GP-FLAT FACE - 502643D1 3 PT HITCH 823
CASE DRAIN GP-PIONEER - 502644D1 3-PT HITCH 825
CONNECTOR GP-VALVE - 180-7174 ABOVE 60 LPM
HYDRAULIC POWER BEYOND ROW AND SPECIAL APPLICATIONS 799
CONVERSION GP-CONTROL VALVE - 185-8699 4 VALVE TO 5 VALVE UPGRADE 801
CONVERSION GP-CONTROL VALVE - 185-8701 803
CONVERSION GP-CONTROL VALVE - 189-5906 5 VALVE TO 6 VALVE UPGRADE 807
CONVERSION GP-CONTROL VALVE - 189-5910 4 VALVE TO 5 VALVE UPGRADE 805
CYLINDER GP (0125-0345-Y) 125MM X 345MM (4.92 X 13.58") 813
CYLINDER GP-LIFT 811
FILTER & MTG GP-HYDRAULIC - 158-2349 815
FILTER GP-OIL (BASIC) - 501767D1 (S/N: EFF BAM40601;BBP40472; BCC40702;BDS40823) 829
FILTER GP-OIL - 210-2395 TRANSMISSION/STEERING/IMPLEMENT (S/N: PRIOR
BAM40601;BBP40472; BCC40702;BDS40823) 827
GUARD GP-HDY FILTER - 233-7373 ROW ONLY 817
HYDRAULIC AR - 158-2342 831
HYDRAULIC KIT-CASE DRAIN 189-3141 EAME ONLY 819
HYDRAULIC KIT-CASE DRAIN 189-3142 821
HYDRAULIC KIT-POWER BEYOND - 178-7162 STD FLOW
(0-60 LPM) .5" COUPLER ROW AND SPECIAL APPLICATIONS 797
KIT-COUPLING-POWER BEYOND - 189-3143 (CLAAS) EAME ONLY 809
LINES GP-COUPLER 210-0851 835
LINES GP-COUPLER - 190-0438 833
LINES GP-ECOLOGY - 502214D1 855
LINES GP-HYD OIL - 172-4516 837
LINES GP-HYDRAULIC - 209-8326 (FOR USE W/85CC CAPACITY CHARGE PUMP) 851
LINES GP-HYDRAULIC OIL - 193-1558 841
LINES GP-HYDRAULIC OIL - 209-8325 849
LINES GP-HYDRAULIC OIL - 501130D1 HYDRAULIC TRAILER BRAKE 857
LINES GP-IMPL - 172-4519 87CC CAPACITY IMPLEMENT PUMP 853
LINES GP-IMPLEMENT - 158-2356 843
LINES GP-IMPLEMENT - 172-4518 847
LINES GP-STEERING - 158-2393 859
MOUNTING GP-VALVE - 158-2339 861
MOUNTING GP-VALVE - 162-9805 865
MOUNTING GP-VALVE - 193-1548 863
PUMP & MOUNTING GP - 162-9804 (63CC IMPLEMENT PUMP) 867
PUMP & MOUNTING GP - 165-7901 (87CC IMPLEMENT PUMP) 869
PUMP & MTG GP-HYDRAULIC - 158-2397 SCAVENGE PUMP 871
PUMP AR-HYDRAULIC - 180-0184 63CC IMPLEMENT PUMP 873
PUMP AR-HYDRAULIC - 180-0185 87CC IMPLEMENT PUMP 875
PUMP GP-GEAR - CH206-6337 STEERING, IMPLEMENT & TRANS CHARGE 877
PUMP GP-GEAR - CH207-3629 SCAVANGE PUMP STEERING,
IMPLEMENT & TRANS CHARGE 879
PUMP GP-PISTON (SLIPPER) - CH206-9019 63CC IMPLEMENT 885
PUMP GP-PISTON - CH162-9592 SCAVENGE PUMP SLIPPER 881
PUMP GP-PISTON - CH206-9017 87CC IMPLEMENT 883
ROTATING GP-PUMP - 190-3118 87CC IMPLEMENT PUMP 887

HYDRAULIC SYSTEM (CONTINUED)

ROTATING GP-PUMP - 190-6501 63CC IMPLEMENT PUMP 889
ROTATING GP-PUMP - 205-6400 SCAVENGE PUMP 891
VALVE AR - 180-1438 5 IMPLEMENTS 905
VALVE AR - 193-8197 W/O HITCH & W/O HYDRAULIC TRAILER BRAKE 893
VALVE AR - 193-8198 W/HITCH & W/O HYDRAULIC TRAILER BRAKE ROW & EAME 897
VALVE AR - 193-8199 W/O HITCH & W/HYDRAULIC TRAILER BRAKE EAME ONLY 899
VALVE AR - 193-8200 W/HITCH & W/HYDRAULIC TRAILER BRAKE EAME ONLY 901
VALVE AR - 501070D1 W/O HITCH & W/HYDRAULIC TRAILER BRAKE 895
VALVE AR-BANK 4 - 180-1434 903
VALVE AR-IMPL - 500795D1 6 IMPLEMENTS 907
VALVE GP-BANK 2 - 192-4816 PRIORITY W/HYDRAULIC TRAILER BRAKE 909
VALVE GP-BANK 3 - 192-4708 PRIORITY WITH HITCH 911
VALVE GP-BANK 4 - 180-0494 IMPLEMENT 913
VALVE GP-BANK 4 - 192-4817 PRIORITY W/HITCH & W/HYD TRAILER BRAKES EAME ONLY 915
VALVE GP-BANK 5 - 180-0495 IMPLEMENT 917
VALVE GP-BANK 6 - 500752D1 5 REMOTES 919
VALVE GP-BRAKE CONTROL - 196-2318 HYDRAULIC TRAILER BRAKES 931
VALVE GP-CONTROL - 162-9816 IMPLEMENT 923
VALVE GP-CONTROL - 162-9817 STEERABLE HITCH 925
VALVE GP-CONTROL - 162-9818 3 POINT HITCH 927
VALVE GP-CONTROL - 192-4707 PRIORITY W/HYDRAULIC TRAILER BRAKES 929
VALVE GP-CONTROL - 209-5019 PRIORITY & ACCUMULATOR CHARGE 933
VALVE GP-CONTROL - 209-5020 PRIORITY 935
VALVE GP-CONTROL - 209-5021 PRIORITY 937
VALVE GP-FLOW CONTROL&RELIEF - 227-8830 IMPLEMENT 921
VALVE GP-PRESS & FLOW CMPNSTR - 214-9379 939
VALVE GP-PRESSURE COMPENSATOR CH6E-4392 941
VALVE GP-SERVO - CH183-8417 943
VALVE GP-SERVO - 205-6412 945

MACHINE ARRANGEMENT

BASE COMMON AR (EURO) - 179-2180 EAME 75
BASE COMMON AR - 179-1952 ROW & SPECIAL ONLY 73
BASE UNIT AR-MT835 - 500033D1 SPECIAL APPLICATIONS 65
BASE UNIT AR-MT845 - 500034D1 SPECIAL APPLICATIONS 67
BASE UNIT AR-MT855 - 500035D1 SPECIAL APPLICATIONS 69
BASE UNIT AR-MT865 - 156-5584 ROW 55
BASE UNIT AR-MT865 - 500037D1 SPECIAL APPLICATIONS 71
BASIC UNIT AR-MT835 - 156-5581 ROW 49
BASIC UNIT AR-MT835 - 179-2193 EAME 57
BASIC UNIT AR-MT845 - 156-5582 ROW 51
BASIC UNIT AR-MT845 - 179-2194 EAME 59
BASIC UNIT AR-MT855 - 156-5583 ROW 53
BASIC UNIT AR-MT855 - 179-2195 EAME 61
BASIC UNIT AR-MT865 - 179-2196 EAME 63

MAINTENANCE PARTS

RECOMMENDED DEALER STOCK 1263

OPERATOR STATION

AIR CONDITIONER & MOUNTING GP-BASIC 151-9986
(S/N: PRIOR TO BAM50633; BBP50486; BCC50765; BDS50909) 1023
AIR CONDITIONER & MOUNTING GP-BASIC 502502D1
(S/N: EFF BAM50633; BBP50486; BCC50765; BDS50909) 1025
AIR CONDITIONER & MOUNTING GP-DELUXE 166-4592
(S/N: PRIOR TO BAM50619; BBP50482; BCC50756; BDS50902) 1027
AIR CONDITIONER & MOUNTING GP-DELUXE 502501D1
(S/N: EFF BAM50619;BBP50482; BCC50756;BDS50902) 1029
AIR CONDITIONER GP-BASIC - 152-0428
(S/N: PRIOR TO BAM40605; BBP40472; BCC40709; BDS40834) 1 OF 3 1031
AIR CONDITIONER GP-BASIC - 152-0428
(S/N: PRIOR TO BAM40605; BBP40472; BCC40709; BDS40834) 2 OF 3 1033
AIR CONDITIONER GP-BASIC - 152-0428
(S/N: PRIOR TO BAM40605; BBP40472; BCC40709; BDS40834) 3 OF 3 1035
AIR CONDITIONER GP-DELUXE - 152-0427
(S/N: PRIOR TO BAM40575;BBP40461; BCC40683;BDS40763) 1039
AIR CONDITIONER GP-DELUXE - 502499D1
(S/N: EFF BAM40575;BBP40461; BCC40683;BDS40763) 1043
ANTENNA GP-RADIO - 168-1951 1045
ANTENNA GP-RADIO - 210-1570 BUSINESS BAND 1047
ARMREST GP - 500484D2 4 IMP W/PTO-W/O HTCH 1129
ARMREST GP - 500485D2 4 IMP W/PTO-W/HITCH 1131

OPERATOR STATION (CONTINUED)

ARMREST GP - 500486D2 4 IMP W/O PTO-W/O HITCH 1133
ARMREST GP - 500487D2 4 IMP W/O PTO-W/HITCH 1135
ARMREST GP - 500488D2 5 IMP W/PTO-W/O HITCH 1137
ARMREST GP - 500489D2 5 IMP W/PTO-W/HTCH 1139
ARMREST GP - 500490D2 5 IMP W/O PTO-W/O HITCH 1141
ARMREST GP - 500491D2 5 IMP W/O PTO-W/HITCH 1143
ARMREST GP - 500791D2 6 IMP W/PTO-W/O HITCH 1145
ARMREST GP - 500792D2 6 IMP W/PTO-W/HITCH 1147
ARMREST GP - 500793D2 6 IMP W/O PTO-W/O HITCH 1149
ARMREST GP - 500794D2 6 IMP W/O PTO-W/HITCH 1151
CAB AR-BASIC - 500842D1 EAME ONLY 1049
CAB AR-BASIC - 500844D1 ROW & SPECIAL APPLICATIONS 1053
CAB AR-DELUXE - 500841D1 EAME ONLY 1051
CAB AR-DELUXE - 500843D1 MT835 & MT845 ROW & SPECIAL APPLICATIONS 1055
CAB AR-DELUXE - 500849D1 MT855 & MT865 ROW & SPECIAL APPLICATIONS 1057
CAB GP - 152-0003 ROW & SPECIAL APPLICATIONS 1059
CAB GP - 152-0004 EAME ONLY 1061
CHANGER GP-COMPACT DISC - 173-6507 ROW AND SPECIAL APPLICATIONS 1117
COMPRESSOR GP-REFRIGERANT - CH178-9570 1063
CONDITIONER GP-AIR-BASIC - 502500D1
(S/N: PRIOR TO BAM40605; BBP40472; BCC40709; BDS40834) 1037
CONSOLE GP - 500768D1 1067
CONSOLE GP-MTG - 500839D1 1127
CONSOLE GP-OPERATOR - 152-0434 WITH PTO 1065
CONTROL GP-AIR & TEMPERATURE 166-4586 1071
CONTROL GP-BRAKE & CLUTCH 152-0438 1073
CONTROL GP-HITCH - 152-0445 REAR 3 POINT 1075
CONTROL GP-IMPLEMENT 209-8704 1085
CONTROL GP-IMPLEMENT - 4 HANDLES 152-0443 1079
CONTROL GP-IMPLEMENT - 4TH HANDLE 136-5355 1077
CONTROL GP-IMPLEMENT - 5 HANDLES 166-4590 1083
CONTROL GP-IMPLEMENT - 6TH HANDLE 152-0448 1081
CONTROL GP-TRANSMISSION 169-6347 1089
CONTROL GP-TRANSMISSION - 169-6346 1087
COVER GP - 500761D1 1069
DOOR GP-CAB (LH) - 164-7068
(S/N: PRIOR TO BAM40608; BBP40474; BCC60741; BDS40890) 1091
DOOR GP-CAB (LH) - 500927D1 (S/N: EFF BAM40608; BBP40474; BCC60741; BDS40890) 1093
DUCT GP-CAB AIR 166-4556 1095
GLASS GP-WINDSHIELD - 151-9994 ROW & SPECIAL 1185
GLASS GP-WINDSHIELD - 151-9995 EAME ONLY 1187
HEADLINER GP - 152-0418 OPERATOR COMPARTMENT 1097
INSULATION GP-WEATHER - 217-2214 1125
KIT-SEAT AS (LUMBAR) - BASIC 220-2329 1159
KIT-SEAT AS (LUMBAR) - DELUXE 501912D1 1161
KIT-SEAT SUSPENSION - BASIC 501898D1 1163
KIT-SEAT SUSPENSION - DELUXE 501909D1 1165
KIT-SUSPENSION GP - DELUXE SEAT 501916D1 1169
KIT-SUSPENSION GP-BASIC SEAT 501900D1 1167
KIT-WIPER (RH) - 162-4103 1193
LINES GP-A/C - 172-5343 1099
LINES GP-HEATER - DELUXE 208-2881 1103
LINES GP-HEATER - 208-2880 1101
MIRROR GP - 206-0588 SIDE AREA VIEW EAME ONLY 1109
MIRROR GP-REAR VIEW - 209-5607 MANUAL ADJUSTMENT 1105
MIRROR GP-REAR VIEW - 209-5608 POWER ADJUSTMENT & HEATED 1107
RADIO GP-AUTOGUIDE - 232-0869 1119
RADIO GP-DELUXE - 168-1970 12V HD AM/FM/WB/CAS/REMOTE/GRN
BACKLIGHT ROW AND SPECIAL APPLICATIONS 1113
RADIO GP-DELUXE CD - 170-5739 12V HD AM/FM/WB/CD/REMOTE/GRN
BACKLIGHT ROW AND SPECIAL APPLICATIONS 1115
RADIO GP-STD - 168-1952 12V HD, AM/FM/WB/CASS W/GREEN BACKLIGHT 1111
ROOF GP-CAB - 152-0417 ROW AND SPECIAL APPLICATIONS 1121
ROOF GP-CAB - 152-0444 EAME ONLY 1123

OPERATOR STATION (CONTINUED)

SEAT GP - DELUXE 500853D1 1157
SEAT GP-BASIC 500840D1 1155
SEAT GP-TRAINING - 152-0433 1153
SPEAKER GP-RADIO 152-0419 1171
SPEAKER GP-RADIO - SUBWOOFER 173-6506 1173
STEERING COLUMN GP - CH166-3611 1175
TRIM GP-CAB - 224-3917 1 OF 2 1177
TRIM GP-CAB - 224-3917 2 OF 2 1179
VISOR GP-CAB (SUN VISOR) - FRONT 152-0424 1181
VISOR GP-CAB (SUN VISOR) - REAR 162-4095 1183
WIPER GP (DELUXE) - 196-3968 1191
WIPER GP-WINDOW (BASIC) - 152-0422 1189

PAINT

PAINT 1261

POWER TRAIN

152-5242 TRANSMISSION AR S/N: 9YY1-UP 511
155-9571 CLUTCH GP-INPUT S/N: 9YY1-1465 427
155-9572 CLUTCH GP-INTERMEDIATE SHAFT S/N: 9YY1-1465 429
155-9575 CLUTCH GP-REVERSE S/N: 9YY1-UP 433
155-9576 CLUTCH GP-OUTPUT SHAFT S/N: 9YY1-UP 435
155-9579 CASE & PARTS GP-PLANETARY S/N: 9YY1-950 421
155-9579 CASE & PARTS GP-PLANETARY S/N: 9YY951-UP 423
155-9580 CONTROL GP-TRANSMISSION HYD S/N: 9YY1-UP 453
177-5233 CLUTCH GP-PLANETARY S/N: 9YY1-UP 439
177-5234 DRIVE GP-PUMP S/N: 9YY1-UP 493
179-9479 FINAL DRIVE GP S/N: AZG1-955; AZJ1-1479 497
179-9479 FINAL DRIVE GP S/N: AZG956-UP; AZJ1480-UP 499
179-9480 FINAL DRIVE GP S/N: AZH1-990; AZK1-987 2286-2600MM (90-102 IN) GAUGE 501
179-9480 FINAL DRIVE GP S/N: AZH991-UP; AZK988-UP 503
180-4376 DIFFERENTIAL GP-STEERING (PAGE 1 OF 2) S/N: AZG1-906; AZH1-972; 457
180-4376 DIFFERENTIAL GP-STEERING (PAGE 2 OF 2) S/N: AZG1-906; AZH1-972; 459
180-4376 DIFFERENTIAL GP-STEERING S/N: AZG1-906; AZH1-972; 455
180-4376 DIFFERENTIAL GP-STEERING S/N: AZG1013-UP; AZH1005-UP; AZJ1897-UP 483
180-4376 DIFFERENTIAL GP-STEERING S/N: AZG907-950; AZH973-983; 463
180-4376 DIFFERENTIAL GP-STEERING S/N: AZG951-1012; AZH984-1004; 473
185-3955 AXLE AR-WITH POWER TAKE-OFF S/N: AZG1-UP 2286-3251 MM (90-128 IN) 515
185-3956 AXLE AR-WITH POWER TAKE-OFF S/N: AZH1-UP 2286-2600 MM (90-102 IN) 517
185-3957 AXLE AR S/N: AZJ1-UP 2286-3251 MM (90-128 IN)
CANNOT BE USED WITH POWER TAKE OFF 519
185-3958 AXLE AR-WITHOUT POWER TAKE-OFF S/N: AZK1-UP 2286-2600 MM (90-102 IN) 521
185-8737 COVER GP-DIFFERENTIAL S/N: AZJ1-UP; AZK1-UP 523
187-4930 POWER TAKE-OFF GP S/N: AZG1-879; AZH1-959 525
187-4930 POWER TAKE-OFF GP S/N: AZG880-900; AZH960-971 531
187-4930 POWER TAKE-OFF GP S/N: AZG901-UP; AZH972-UP 537
198-1013 VALVE GP-RELIEF S/N: 9YY1-UP 513
200-5027 POWER TRAIN AR - WITH PTO (2286-3251MM/90-128") GAGE 413
200-5028 POWER TRAIN AR-WITH PTO (2286-2600MM/90-102") GAGE 415
200-5029 POWER TRAIN AR - W/ PTO 417
200-5030 POWER TRAIN AR WITHOUT PTO 419
211-8277 FASTENER GP-FINAL DRIVE 495
216-5343 VALVE GP-MODULATING S/N: AZG1-879; AZH1-959 543
216-5343 VALVE GP-MODULATING S/N: AZG880-UP; AZH960-UP; 9YY1-UP
12V ELECTRONIC CLUTCH PRESSURE CONTROL 545
217-7314 HOUSING GP-DIFFERENTIAL S/N: AZG1-906; AZH1-972; 505
225-6958 HOUSING GP-DIFFERENTIAL S/N: AZG907-950;AZH973-983; 507
232-1774 CLUTCH GP-TRANSMISSION INPUT SHAFT CLUTCH GROUP
S/N: 9YY1466-UP 443
232-1774 CLUTCH GP-TRANSMISSION INTERMEDIATE SHAFT CLUTCH GROUP (1 OF 2)
S/N: 9YY1466-UP 445
232-1774 CLUTCH GP-TRANSMISSION INTERMEDIATE SHAFT CLUTCH GROUP (2 OF 2)
S/N: 9YY1466-UP 447
232-1774 CLUTCH GP-TRANSMISSION OUTPUT SHAFT CLUTCH GROUP (1 OF 2)
S/N: 9YY1466-UP 449
232-1774 CLUTCH GP-TRANSMISSION OUTPUT SHAFT CLUTCH GROUP (2 OF 2)
S/N: 9YY1466-UP 451
232-1774 CLUTCH GP-TRANSMISSION REVERSE SHAFT CLUTCH GROUP
S/N: 9YY1466-UP 441
242-0962 HOUSING GP-DIFFERENTIAL S/N: AZG951-UP; AZH984-UP; 509

POWER TRAIN ATTACHING

BREATHER GP-POWERTRAIN - 502496D1
(S/N: EFF BAM40556; BBP40455; BCC40654; BDS40740) 405
DRAIN GP-ECOLOGY - CH163-0397 399
FILLER GP-POWER TRAIN OIL - 179-4304
(S/N: PRIOR TO BAM40556; BBP40455; BCC40654; BDS40740) 403
FILLER GP-POWER TRAIN OIL - 502498D1 401
GUARD GP-AXLE - 208-3021 EAME ONLY 397
SHAFT GP-INPUT - 163-0383 407
SHAFT GP-INPUT - 163-0384 MT855 & MT865 409
UNIVERSAL JOINT GP - 163-0414 411

SERVICE EQUIPMENT AND SUPPLIES

PROTECTION GP-VANDALISM 185-8848 1257
TOOL GP-AXLE GAUGE CHANGE - 203-9712 FACTORY OPTION 1259

TRACK BELTS

BELT AR-EXTREME AP - 156-6075 (457MM/18") 645
BELT AR-EXTREME AP - 177-4522 (700MM/27.5") 647
BELT AR-EXTREME AP - 177-4523 (762MM/30") 649
BELT AR-EXTREME AP - 178-8087 (914MM/36") 651
BELT AR-GENERAL AG - 156-6079 (762MM/30") 641
BELT AR-GENERAL AG - 156-6082 (914MM/36") 643
BELT AR-GENERAL AP - 156-6077 (699MM/27.5") ROW & EAME 639
BELT AR-SPECIAL AP - 502027D1 (762MM/30") 653
BELT AR-SPECIAL AP - 502028D1 (914MM/36") 655
KIT-GUIDE BLOCK GENERAL AG & EXTREME APPLICATIONS 657

UNDERCARRIAGE

BOGIE GP - 130-4818 671
FRAME AR-LH - 156-4883 675
FRAME AR-RH 156-4882 673
FRAME GP-TRACK ROLLER - 163-0678 677
GAGE AR-TRACK (W/PTO) 2286-3251 MM (90-128 IN) ROW ONLY 661
GAUGE AR-TRACK (W/O PTO) - 177-9947 (2286-2600MM/90-102") EAME ONLY 663
GAUGE AR-TRACK (W/O PTO) - 177-9948 (2286-3251MM/90-128") ROW ONLY 659
GAUGE AR-TRACK (W/PTO) - 183-2197 (2286-2600MM/90-102") EAME ONLY 665
GUARD GP-LINES - 201-9927 TENSIONER WIRE 679
GUARD GP-LINES - 201-9928 681
IDLER GP - 127-9545 683
MOUNTING GP-IDLER - 177-4589 685
MOUNTING GP-TENSIONER - 184-6718 TRACK BELT 687
RESTRAIN GP-ROLLERFRAME - 500040D1 705
ROLLER AR - 156-4891 MIDDLE 112 MM (4.4 IN) 689
ROLLER AR - 156-4893 MIDDLE 204 MM (8 IN) 691
SUPPORT GP-DRIVE WHEEL - 156-4884 RIGHT HAND 693
SUPPORT GP-DRIVE WHEEL - 156-4885 LEFT HAND 695
SUPPORT GP-UNDERCARRIAGE - 163-1009 WIDE GAUGE 697
SUPPORT GP-UNDERCARRIAGE - 177-9945 (2286-2600MM/90-102") EAME ONLY 699
TENSIONER GP-BELT - LH 500835D1 667
TENSIONER GP-BELT - RH 500836D1 669
UNDERCARRIAGE AR - 156-4881 ROW 701
UNDERCARRIAGE AR - 177-9946 EAME ONLY 703
WEDGE GP-WHEEL - 189-8931 EAME ONLY 715
WHEEL AR-DRIVER - 220-2357 112 MM (4.4 IN) ROW & EAME 707
WHEEL AR-DRIVER - 220-2358 WIDE 196 MM (7.7 IN) 709
WHEEL AR-IDLER - 220-2355 105 MM (4.1 IN) 711
WHEEL AR-IDLER - 220-2356 192 MM (7.6 IN) 713

INDEX

Part No.	Page	Grid
AG518357	1013	1-F 7
CH0L-1352	97	1-B 11
CH0L-1352	103	1-B 12
CH0L-2072	747	1-E 4
CH0S-1617	97	1-B 11
CH0S-1617	103	1-B 12
CH0T-0200	1001	1-F 6
CH0T-0200	1003	1-F 6
CH001-5600	775	1-E 7
CH001-5600	777	1-E 7
CH001-5600	1073	1-F 13
CH003-7764	145	1-B 16
CH003-7764	147	1-B 16
CH003-7764	843	1-E 14
CH004-7270	147	1-B 16
CH006-6586	403	1-C 18
CH006-6586	405	1-C 18
CH006-7801	145	1-B 16
CH030-4606	195	1-B 21
CH030-9613	1193	1-G 1
CH032-3631	93	1-B 11
CH033-1097	969	1-F 2
CH033-5879	921	1-E 22
CH033-6031	853	1-E 15
CH033-6032	923	1-E 22
CH033-6032	925	1-E 22
CH033-6033	179	1-B 19
CH033-6033	181	1-B 20
CH033-6043	939	1-E 23
CH033-7291	581	1-D 12
CH034-4202	183	1-B 20
CH053-2313	145	1-B 16
CH061-9593	191	1-B 21
CH077-3241	399	1-C 17
CH077-5261	877	1-E 17
CH090-9554	1091	1-F 15
CH090-9554	1093	1-F 15
CH090-9555	1179	1-F 23
CH095-0687	885	1-E 18
CH095-0736	347	1-C 12
CH095-0741	1203	1-G 2
CH095-0759	1153	1-F 21
CH095-0845	1001	1-F 6
CH095-0845	1003	1-F 6
CH095-0915	171	1-B 19
CH095-0942	943	1-E 24
CH095-1316	751	1-E 5
CH095-1316	755	1-E 5
CH095-1715	931	1-E 23
CH095-1750	771	1-E 7
CH095-9230	1001	1-F 6
CH096-2323	923	1-E 22
CH096-5968	945	1-E 24
CH096-6095	881	1-E 18
CH096-6166	359	1-C 13
CH096-6166	361	1-C 14
CH096-6166	1177	1-F 23
CH1A-8827	957	1-F 1
CH1A-8827	959	1-F 1
CH1B-0676	1073	1-F 13
CH1B-4202	743	1-E 4
CH1F-5403	1073	1-F 13
CH1G-3174	787	1-E 8
CH1G-3174	793	1-E 9
CH1H-8289	621	1-D 16
CH1J-2860	683	1-D 22
CH1J-4757	683	1-D 22
CH1J-6474	969	1-F 2
CH1J-9671	667	1-D 20
CH1J-9671	669	1-D 20
CH1J-9671	671	1-D 21
CH1J-9671	683	1-D 22
CH1J-9671	693	1-D 23
CH1J-9671	695	1-D 23
CH1K-6872	617	1-D 15
CH1N-5970	671	1-D 21
CH1P-4278	145	1-B 16
CH1P-4278	147	1-B 16
CH1P-4278	175	1-B 19
CH1P-4278	177	1-B 19
CH1P-4278	191	1-B 21
CH1P-4278	403	1-C 18
CH1P-4278	405	1-C 18
CH1P-4278	667	1-D 20
CH1P-4278	669	1-D 20
CH1P-4278	845	1-E 14
CH1P-4278	855	1-E 15
CH1P-4578	853	1-E 15
CH1P-5767	859	1-E 15
CH1R-0771	175	1-B 19
CH1R-0771	177	1-B 19
CH1S-0994	99	1-B 11
CH1S-0994	211	1-B 23
CH1S-0994	741	1-E 4
CH1S-0994	759	1-E 5
CH1S-0994	845	1-E 14
CH1S-0994	855	1-E 15
CH1S-1015	859	1-E 15
CH1U-8846	693	1-D 23
CH1U-8846	695	1-D 23
CH100-4036	597	1-D 13
CH100-4036	601	1-D 14
CH100-4336	199	1-B 21
CH100-4336	203	1-B 22
CH101-2850	155	1-B 17
CH101-2850	157	1-B 17
CH101-2867	1097	1-F 15
CH101-3129	679	1-D 21
CH101-3129	681	1-D 22
CH102-0409	407	1-C 18
CH102-8802	341	1-C 12
CH102-8802	343	1-C 12
CH102-8802	345	1-C 12
CH102-8802	353	1-C 13
CH102-8802	373	1-C 15
CH102-8802	379	1-C 15
CH102-8802	383	1-C 16
CH102-8802	1063	1-F 12
CH102-8803	375	1-C 15
CH102-8803	395	1-C 17
CH102-8805	1107	1-F 16
CH102-8805	1189	1-F 24
CH102-8805	1191	1-G 1
CH102-8805	1193	1-G 1
CH102-8806	329	1-C 10
CH102-8806	1189	1-F 24
CH103-6216	97	1-B 11
CH103-6216	103	1-B 12
CH103-8089	621	1-D 16
CH104-2091	1067	1-F 12
CH104-2091	1095	1-F 15
CH104-3466	957	1-F 1
CH105-1632	883	1-E 18
CH105-1638	883	1-E 18
CH105-1646	887	1-E 18
CH105-1648	887	1-E 18
CH105-1650	887	1-E 18
CH105-1651	887	1-E 18
CH105-1866	163	1-B 18
CH105-1866	165	1-B 18
CH105-2145	939	1-E 23
CH105-3031	883	1-E 18
CH105-3032	883	1-E 18
CH105-3033	883	1-E 18
CH105-8034	361	1-C 14
CH106-2105	843	1-E 14
CH106-2105	855	1-E 15
CH107-5591	1027	1-F 8
CH107-5591	1029	1-F 8
CH108-5985	667	1-D 20
CH108-5985	669	1-D 20
CH108-6075	683	1-D 22
CH108-7251	993	1-F 5
CH109-2356	1007	1-F 6
CH109-9685	927	1-E 22
CH110-0004	99	1-B 11
CH110-2028	331	1-C 11
CH110-2028	359	1-C 13
CH110-2028	1121	1-F 18
CH110-2028	1123	1-F 18
CH110-2028	1171	1-F 23
CH110-6349	667	1-D 20
CH110-6349	669	1-D 20
CH110-6349	859	1-E 15
CH111-4627	1177	1-F 23
CH111-8897	945	1-E 24
CH112-4631	945	1-E 24
CH112-6174	1189	1-F 24
CH113-0899	1075	1-F 13
CH113-4420	791	1-E 9
CH113-8490	289	1-C 6
CH113-8490	291	1-C 7
CH113-8490	293	1-C 7
CH113-8490	295	1-C 7
CH113-8490	297	1-C 7
CH113-8490	1263	1-G 8
CH113-8491	289	1-C 6
CH113-8491	291	1-C 7
CH113-8491	295	1-C 7
CH113-8491	297	1-C 7
CH113-8491	299	1-C 7
CH113-8491	301	1-C 8
CH113-8491	1263	1-G 8
CH113-8492	289	1-C 6
CH113-8492	291	1-C 7
CH113-8492	293	1-C 7
CH113-8492	299	1-C 7
CH113-8492	301	1-C 8
CH113-8492	1263	1-G 8
CH113-8880	597	1-D 13
CH113-8880	601	1-D 14
CH114-3469	1063	1-F 12
CH114-4231	145	1-B 16
CH114-5333	373	1-C 15
CH114-5333	379	1-C 15
CH114-5785	1099	1-F 15
CH114-5786	733	1-E 3
CH114-5793	597	1-D 13
CH114-5793	601	1-D 14
CH116-5728	171	1-B 19
CH116-7471	361	1-C 14
CH117-0754	969	1-F 2
CH117-2311	361	1-C 14
CH117-8801	885	1-E 18
CH117-8929	1095	1-F 15
CH118-0772	621	1-D 16
CH118-4728	93	1-B 11
CH119-0942	795	1-E 9
CH119-1329	1001	1-F 6
CH119-5026	251	1-C 3
CH119-5026	255	1-C 3
CH119-5026	257	1-C 3
CH119-5026	351	1-C 13
CH119-5026	371	1-C 15
CH119-5026	1067	1-F 12
CH119-5026	1097	1-F 15
CH119-5026	1171	1-F 23
CH119-6110	791	1-E 9
CH119-7845	781	1-E 8
CH119-9708	667	1-D 20
CH119-9708	669	1-D 20
CH120-4897	209	1-B 22
CH120-4897	229	1-B 24
CH121-9753	275	1-C 5
CH121-9753	277	1-C 5
CH121-9754	275	1-C 5
CH121-9754	277	1-C 5
CH121-9755	275	1-C 5
CH121-9755	277	1-C 5
CH121-9870	1179	1-F 23
CH122-1162	997	1-F 5
CH122-6606	891	1-E 19
CH122-6607	891	1-E 19
CH122-8352	145	1-B 16
CH122-9250	751	1-E 5
CH122-9250	755	1-E 5
CH123-0707	359	1-C 13
CH123-1373	197	1-B 21
CH123-1373	199	1-B 21
CH123-2017	781	1-E 8
CH123-4950	599	1-D 13
CH123-4950	601	1-D 14
CH123-4950	1257	1-G 7
CH123-5748	791	1-E 9
CH123-7556	781	1-E 8
CH123-7582	881	1-E 18
CH123-7583	781	1-E 8
CH124-3548	289	1-C 6
CH124-3548	291	1-C 7
CH124-3548	293	1-C 7
CH124-3548	295	1-C 7
CH124-3548	297	1-C 7
CH124-3548	1263	1-G 8
CH124-4653	351	1-C 13
CH124-5572	97	1-B 11
CH124-5572	103	1-B 12
CH124-7346	1073	1-F 13
CH125-7131	93	1-B 11
CH126-1645	881	1-E 18
CH126-1766	827	1-E 12
CH126-1773	209	1-B 22
CH127-2170	171	1-B 19
CH127-2170	705	1-D 24
CH127-8609	237	1-C 1
CH127-8609	239	1-C 1
CH127-9548	683	1-D 22
CH127-9553	683	1-D 22
CH127-9554	683	1-D 22
CH128-0331	93	1-B 11
CH128-2162	1027	1-F 8
CH128-2162	1029	1-F 8
CH128-4249	213	1-B 23
CH128-4249	349	1-C 12
CH129-2181	93	1-B 11
CH129-3178	581	1-D 12
CH129-3178	597	1-D 13
CH129-3178	599	1-D 13
CH129-3178	601	1-D 14
CH129-3178	603	1-D 14
CH129-3178	1075	1-F 13
CH129-3178	1177	1-F 23
CH129-6457	359	1-C 13
CH129-6457	361	1-C 14
CH130-5742	1071	1-F 13
CH131-2171	93	1-B 11
CH131-3093	1027	1-F 8
CH131-3093	1029	1-F 8
CH131-3540	597	1-D 13
CH131-3540	599	1-D 13
CH131-3540	601	1-D 14
CH131-3540	1023	1-F 8
CH131-3540	1025	1-F 8
CH131-3540	1027	1-F 8
CH131-3540	1029	1-F 8
CH131-3540	1095	1-F 15
CH131-8627	233	1-C 1
CH131-8627	235	1-C 1
CH132-5789	197	1-B 21
CH132-5789	199	1-B 21
CH132-5789	203	1-B 22

Part No.	Page	Grid
CH132-5789	205	1-B 22
CH132-5789	373	1-C 15
CH132-5789	383	1-C 16
CH133-6517	233	1-C 1
CH133-6517	235	1-C 1
CH133-6517	237	1-C 1
CH133-6517	239	1-C 1
CH134-1935	1191	1-G 1
CH134-1935	1263	1-G 8
CH134-3987	377	1-C 15
CH134-3987	383	1-C 16
CH134-3988	197	1-B 21
CH134-3988	199	1-B 21
CH134-3988	203	1-B 22
CH134-3988	205	1-B 22
CH134-3988	375	1-C 15
CH134-3988	381	1-C 16
CH134-3988	383	1-C 16
CH134-4126	209	1-B 22
CH134-4126	229	1-B 24
CH134-7489	781	1-E 8
CH135-6260	159	1-B 17
CH135-6261	159	1-B 17
CH135-6261	161	1-B 18
CH135-8854	781	1-E 8
CH135-8854	881	1-E 18
CH135-9967	329	1-C 10
CH135-9967	1191	1-G 1
CH136-5252	247	1-C 2
CH136-5252	249	1-C 2
CH136-5252	251	1-C 3
CH136-5254	273	1-C 5
CH136-5268	351	1-C 13
CH136-5268	371	1-C 15
CH136-5414	1171	1-F 23
CH136-5415	1171	1-F 23
CH136-5434	1173	1-F 23
CH136-5490	1111	1-F 17
CH136-5490	1113	1-F 17
CH136-5490	1115	1-F 17
CH136-5511	359	1-C 13
CH136-8423	883	1-E 18
CH136-8423	885	1-E 18
CH137-3780	881	1-E 18
CH137-9775	555	1-D 9
CH137-9775	557	1-D 9
CH137-9775	561	1-D 10
CH139-6911	209	1-B 22
CH139-6911	229	1-B 24
CH140-1739	883	1-E 18
CH140-5181	1091	1-F 15
CH140-5181	1093	1-F 15
CH141-0243	891	1-E 19
CH141-1762	1189	1-F 24
CH141-1762	1191	1-G 1
CH141-2759	297	1-C 7
CH141-2759	299	1-C 7
CH141-2759	301	1-C 8
CH141-2759	1263	1-G 8
CH142-2304	731	1-E 3
CH142-2304	733	1-E 3
CH142-2304	1091	1-F 15
CH142-2304	1093	1-F 15
CH142-2304	1185	1-F 24
CH142-2304	1187	1-F 24
CH142-9681	1111	1-F 17
CH142-9681	1113	1-F 17
CH142-9681	1115	1-F 17
CH144-2179	611	1-D 15
CH144-9093	943	1-E 24
CH144-9094	943	1-E 24
CH144-9097	943	1-E 24
CH144-9098	943	1-E 24
CH144-9101	781	1-E 8
CH144-9103	781	1-E 8
CH145-0846	361	1-C 14
CH145-0847	361	1-C 14
CH145-9545	581	1-D 12
CH146-0835	97	1-B 11
CH146-0835	103	1-B 12
CH146-4350	923	1-E 22
CH146-4351	923	1-E 22
CH146-7453	145	1-B 16
CH146-7453	147	1-B 16
CH146-7453	179	1-B 19
CH146-7453	181	1-B 20
CH146-9439	249	1-C 2
CH146-9439	251	1-C 3
CH146-9439	253	1-C 3
CH146-9439	255	1-C 3
CH146-9439	257	1-C 3
CH146-9439	273	1-C 5
CH146-9439	289	1-C 6
CH146-9439	291	1-C 7
CH146-9439	293	1-C 7
CH146-9439	295	1-C 7
CH146-9439	297	1-C 7
CH146-9439	299	1-C 7
CH146-9439	301	1-C 8
CH146-9439	351	1-C 13
CH146-9439	371	1-C 15
CH146-9439	389	1-C 16
CH146-9439	1107	1-F 16
CH146-9439	1191	1-G 1
CH147-7143	975	1-F 3
CH148-7017	265	1-C 4
CH148-8305	667	1-D 20
CH148-8305	669	1-D 20
CH148-8305	837	1-E 13
CH148-8313	843	1-E 14
CH148-8313	855	1-E 15
CH148-8326	741	1-E 4
CH148-8327	837	1-E 13
CH148-8327	843	1-E 14
CH148-8334	837	1-E 13
CH148-8334	845	1-E 14
CH148-8334	849	1-E 14
CH148-8334	851	1-E 15
CH148-8335	847	1-E 14
CH148-8335	849	1-E 14
CH148-8335	851	1-E 15
CH148-8340	741	1-E 4
CH148-8340	747	1-E 4
CH148-8340	993	1-F 5
CH148-8342	993	1-F 5
CH148-8342	999	1-F 5
CH148-8346	993	1-F 5
CH148-8347	823	1-E 12
CH148-8347	825	1-E 12
CH148-8347	845	1-E 14
CH148-8347	859	1-E 15
CH148-8353	845	1-E 14
CH148-8355	845	1-E 14
CH148-8355	847	1-E 14
CH148-8355	853	1-E 15
CH148-8356	837	1-E 13
CH148-8360	859	1-E 15
CH148-8364	741	1-E 4
CH148-8364	747	1-E 4
CH148-8364	847	1-E 14
CH148-8364	853	1-E 15
CH148-8364	859	1-E 15
CH148-8364	993	1-F 5
CH148-8364	997	1-F 5
CH148-8367	735	1-E 3
CH148-8370	747	1-E 4
CH148-8372	747	1-E 4
CH148-8372	859	1-E 15
CH148-8372	997	1-F 5
CH148-8374	735	1-E 3
CH148-8374	841	1-E 14
CH148-8374	857	1-E 15
CH148-8378	735	1-E 3
CH148-8378	741	1-E 4
CH148-8378	845	1-E 14
CH148-8383	741	1-E 4
CH148-8388	849	1-E 14
CH148-8388	851	1-E 15
CH148-8393	995	1-F 5
CH148-8419	753	1-E 5
CH148-8419	757	1-E 5
CH148-8428	995	1-F 5
CH148-8428	997	1-F 5
CH148-8433	741	1-E 4
CH148-8436	747	1-E 4
CH148-8439	845	1-E 14
CH148-8444	741	1-E 4
CH148-8444	747	1-E 4
CH148-8444	857	1-E 15
CH148-8446	995	1-F 5
CH149-0231	845	1-E 14
CH149-2758	281	1-C 6
CH149-2758	283	1-C 6
CH149-6371	373	1-C 15
CH149-6371	379	1-C 15
CH150-3037	995	1-F 5
CH150-3065	797	1-E 9
CH150-3065	799	1-E 9
CH150-3065	809	1-E 10
CH150-8766	971	1-F 3
CH151-6030	715	1-E 1
CH151-9989	1185	1-F 24
CH151-9989	1187	1-F 24
CH152-4241	989	1-F 4
CH152-4241	991	1-F 5
CH153-4058	797	1-E 9
CH153-4061	797	1-E 9
CH153-4061	799	1-E 9
CH153-6225	797	1-E 9
CH153-6225	799	1-E 9
CH153-6227	799	1-E 9
CH153-6228	799	1-E 9
CH154-2881	237	1-C 1
CH154-2881	239	1-C 1
CH154-5428	345	1-C 12
CH154-9989	1179	1-F 23
CH155-2255	1089	1-F 14
CH155-2258	1089	1-F 14
CH155-2270	827	1-E 12
CH155-3504	137	1-B 15
CH155-3504	999	1-F 5
CH156-0283	247	1-C 2
CH156-0283	249	1-C 2
CH156-0283	251	1-C 3
CH156-0283	253	1-C 3
CH156-0283	255	1-C 3
CH156-0283	257	1-C 3
CH156-0283	731	1-E 3
CH156-0283	733	1-E 3
CH156-4897	683	1-D 22
CH156-4900	683	1-D 22
CH156-6175	345	1-C 12
CH157-0217	1071	1-F 13
CH157-0449	1065	1-F 12
CH159-5890	799	1-E 9
CH159-5893	797	1-E 9
CH159-5893	799	1-E 9
CH159-5897	797	1-E 9
CH159-5897	799	1-E 9
CH159-5898	797	1-E 9
CH159-5898	997	1-F 5
CH160-3957	683	1-D 22
CH160-5223	683	1-D 22
CH160-8756	1185	1-F 24
CH160-8756	1187	1-F 24
CH161-6149	781	1-E 8
CH161-6149	943	1-E 24
CH161-6154	771	1-E 7
CH161-9932	377	1-C 15
CH161-9932	383	1-C 16
CH161-9932	395	1-C 17
CH162-0177	745	1-E 4
CH162-0177	921	1-E 22
CH162-6555	1085	1-F 14
CH162-6660	1067	1-F 12
CH162-8550	1175	1-F 23
CH162-9592	871	1-E 17
CH162-9592	881	1-E 18
CH162-9601	783	1-E 8
CH162-9601	787	1-E 8
CH162-9602	785	1-E 8
CH162-9602	789	1-E 8
CH162-9799	923	1-E 22
CH162-9821	923	1-E 22
CH163-0397	75	1-B 9
CH163-0397	399	1-C 17
CH163-0421	241	1-C 2
CH163-2657	353	1-C 13
CH163-2657	361	1-C 14
CH163-6018	735	1-E 3
CH164-0909	667	1-D 20
CH164-0909	669	1-D 20
CH164-5557	819	1-E 11
CH164-5557	821	1-E 12
CH164-5557	997	1-F 5
CH164-5624	821	1-E 12
CH164-7057	1091	1-F 15
CH164-7057	1093	1-F 15
CH164-7070	1091	1-F 15
CH164-7070	1093	1-F 15
CH164-7491	971	1-F 3
CH164-8478	1095	1-F 15
CH164-9869	741	1-E 4
CH165-5694	809	1-E 10
CH165-5975	321	1-C 10
CH165-5975	353	1-C 13
CH165-5975	357	1-C 13
CH165-5975	361	1-C 14
CH165-5975	1065	1-F 12
CH165-6969	791	1-E 9
CH166-3611	1067	1-F 12
CH166-3611	1175	1-F 23
CH166-4573	1091	1-F 15
CH166-4573	1093	1-F 15
CH166-4574	1091	1-F 15
CH166-4574	1093	1-F 15
CH166-4596	1191	1-G 1
CH166-4615	1045	1-F 10
CH166-7413	793	1-E 9
CH166-7414	793	1-E 9
CH167-2195	965	1-F 2
CH167-2201	813	1-E 11
CH167-2209	667	1-D 20
CH167-2209	669	1-D 20
CH167-2312	813	1-E 11
CH167-2320	667	1-D 20
CH167-2320	669	1-D 20
CH167-2457	965	1-F 2
CH168-2197	885	1-E 18
CH168-2198	885	1-E 18
CH168-2203	885	1-E 18
CH168-2309	1185	1-F 24
CH168-2309	1187	1-F 24
CH168-2333	1065	1-F 12
CH168-3378	889	1-E 18
CH168-3379	889	1-E 18
CH168-3380	889	1-E 18
CH168-3381	889	1-E 18
CH168-3382	889	1-E 18
CH168-3384	889	1-E 18

INDEX

Part No.	Page	Grid
CH168-3385	889	1-E 18
CH168-3504	883	1-E 18
CH168-3504	885	1-E 18
CH168-4599	797	1-E 9
CH168-7317	885	1-E 18
CH168-7319	885	1-E 18
CH168-7710	677	1-D 21
CH168-7863	885	1-E 18
CH168-8389	1211	1-G 3
CH168-8389	1231	1-G 5
CH169-3261	1175	1-F 23
CH169-4273	749	1-E 4
CH169-6324	1111	1-F 17
CH169-6325	1113	1-F 17
CH169-6326	1115	1-F 17
CH169-6352	1177	1-F 23
CH169-6377	1185	1-F 24
CH169-6377	1187	1-F 24
CH169-6392	1091	1-F 15
CH169-6392	1093	1-F 15
CH169-6397	1181	1-F 24
CH169-6397	1183	1-F 24
CH170-0964	797	1-E 9
CH170-0964	799	1-E 9
CH170-0964	809	1-E 10
CH170-1445	1185	1-F 24
CH170-1445	1187	1-F 24
CH170-2237	251	1-C 3
CH170-2237	255	1-C 3
CH170-2237	257	1-C 3
CH170-2237	289	1-C 6
CH170-2237	291	1-C 7
CH170-2237	293	1-C 7
CH170-2237	295	1-C 7
CH170-2320	1015	1-F 7
CH170-5282	99	1-B 11
CH170-5696	1189	1-F 24
CH170-5696	1191	1-G 1
CH170-7251	1113	1-F 17
CH170-7251	1115	1-F 17
CH170-7251	1117	1-F 17
CH171-1105	751	1-E 5
CH171-1105	755	1-E 5
CH171-1106	751	1-E 5
CH171-1106	755	1-E 5
CH171-1107	751	1-E 5
CH171-1107	755	1-E 5
CH171-3054	791	1-E 9
CH171-3055	791	1-E 9
CH171-3057	791	1-E 9
CH171-3058	791	1-E 9
CH171-3059	791	1-E 9
CH171-3060	791	1-E 9
CH171-3061	791	1-E 9
CH171-4047	1095	1-F 15
CH171-5989	791	1-E 9
CH171-6723	995	1-F 5
CH172-2241	121	1-B 14
CH172-2241	123	1-B 14
CH172-2241	125	1-B 14
CH172-3403	121	1-B 14
CH172-3403	123	1-B 14
CH172-3403	125	1-B 14
CH172-3511	223	1-B 24
CH172-4620	809	1-E 10
CH172-4621	797	1-E 9
CH172-4621	809	1-E 10
CH172-4622	809	1-E 10
CH172-4702	93	1-B 11
CH172-5761	747	1-E 4
CH172-6847	1117	1-F 17
CH172-6862	1185	1-F 24
CH172-6862	1187	1-F 24
CH172-9287	747	1-E 4
CH173-0566	399	1-C 17
CH173-3175	301	1-C 8
CH173-7126	175	1-B 19
CH173-7126	177	1-B 19
CH173-7223	377	1-C 15
CH173-7223	383	1-C 16
CH173-7639	809	1-E 10
CH173-9683	965	1-F 2
CH174-4874	693	1-D 23
CH174-4874	695	1-D 23
CH174-5747	173	1-B 19
CH174-5747	1075	1-F 13
CH174-5789	1177	1-F 23
CH174-5810	993	1-F 5
CH174-6381	1121	1-F 18
CH174-6381	1123	1-F 18
CH174-9061	371	1-C 15
CH174-9215	993	1-F 5
CH174-9994	885	1-E 18
CH175-1323	255	1-C 3
CH175-1323	257	1-C 3
CH175-1323	259	1-C 3
CH175-1323	261	1-C 4
CH175-1323	1263	1-G 8
CH175-2851	667	1-D 20
CH175-2851	669	1-D 20
CH175-3135	923	1-E 22
CH175-3135	925	1-E 22
CH175-3244	375	1-C 15
CH175-3244	383	1-C 16
CH175-4966	399	1-C 17
CH175-5327	761	1-E 6
CH175-7057	359	1-C 13
CH175-7514	671	1-D 21
CH175-7900	965	1-F 2
CH176-4546	223	1-B 24
CH177-0378	171	1-B 19
CH177-1872	697	1-D 23
CH177-1872	699	1-D 23
CH177-3405	969	1-F 2
CH177-3405	971	1-F 3
CH177-9778	175	1-B 19
CH178-3333	911	1-E 21
CH178-3888	1189	1-F 24
CH178-4164	781	1-E 8
CH178-4171	781	1-E 8
CH178-7955	1187	1-F 24
CH178-7962	1065	1-F 12
CH178-7963	1065	1-F 12
CH178-7965	1067	1-F 12
CH178-9570	119	1-B 13
CH178-9570	1063	1-F 12
CH179-2959	1179	1-F 23
CH179-3160	1121	1-F 18
CH179-3160	1123	1-F 18
CH179-4206	1081	1-F 14
CH179-4209	1193	1-G 1
CH179-4217	1187	1-F 24
CH179-4265	303	1-C 8
CH179-4324	173	1-B 19
CH179-4324	359	1-C 13
CH179-4324	1075	1-F 13
CH179-6898	733	1-E 3
CH179-8665	845	1-E 14
CH179-8665	855	1-E 15
CH180-0613	291	1-C 7
CH180-0613	293	1-C 7
CH180-0613	295	1-C 7
CH180-1120	739	1-E 3
CH180-6213	885	1-E 18
CH180-7317	305	1-C 8
CH180-9339	395	1-C 17
CH183-3724	799	1-E 9
CH183-3725	797	1-E 9
CH183-4236	751	1-E 5
CH183-4236	755	1-E 5
CH183-4584	377	1-C 15
CH183-4584	381	1-C 16
CH183-5008	957	1-F 1
CH183-5008	959	1-F 1
CH183-8033	129	1-B 14
CH183-8417	795	1-E 9
CH183-8417	943	1-E 24
CH183-8418	943	1-E 24
CH183-8419	943	1-E 24
CH183-8420	943	1-E 24
CH183-8421	943	1-E 24
CH183-8423	943	1-E 24
CH183-8424	943	1-E 24
CH183-8425	943	1-E 24
CH183-8426	943	1-E 24
CH183-8427	943	1-E 24
CH183-8428	943	1-E 24
CH183-8429	943	1-E 24
CH183-8430	795	1-E 9
CH183-8430	881	1-E 18
CH183-8431	795	1-E 9
CH183-8442	795	1-E 9
CH183-8443	795	1-E 9
CH183-8444	795	1-E 9
CH183-8446	891	1-E 19
CH183-8447	891	1-E 19
CH183-8449	891	1-E 19
CH183-8450	891	1-E 19
CH183-8451	891	1-E 19
CH183-8452	891	1-E 19
CH183-8453	891	1-E 19
CH183-8454	881	1-E 18
CH184-5034	949	1-E 24
CH184-5034	951	1-F 1
CH184-5034	961	1-F 2
CH184-5339	743	1-E 4
CH184-8029	93	1-B 11
CH184-8029	99	1-B 11
CH185-0295	885	1-E 18
CH185-0296	885	1-E 18
CH185-3886	1175	1-F 23
CH185-3959	841	1-E 14
CH185-3959	857	1-E 15
CH185-7141	331	1-C 11
CH185-9753	751	1-E 5
CH185-9753	755	1-E 5
CH185-9753	761	1-E 6
CH185-9753	833	1-E 13
CH185-9753	835	1-E 13
CH185-9759	751	1-E 5
CH185-9759	755	1-E 5
CH185-9762	751	1-E 5
CH185-9762	755	1-E 5
CH185-9762	761	1-E 6
CH185-9763	833	1-E 13
CH185-9768	751	1-E 5
CH185-9768	755	1-E 5
CH185-9768	759	1-E 5
CH185-9772	751	1-E 5
CH185-9772	755	1-E 5
CH185-9773	751	1-E 5
CH185-9773	755	1-E 5
CH185-9773	761	1-E 6
CH185-9773	833	1-E 13
CH185-9773	835	1-E 13
CH186-0341	923	1-E 22
CH186-0347	923	1-E 22
CH186-0348	923	1-E 22
CH186-0364	923	1-E 22
CH186-0365	923	1-E 22
CH186-0367	923	1-E 22
CH186-0368	923	1-E 22
CH186-0368	925	1-E 22
CH186-0369	923	1-E 22
CH186-0369	925	1-E 22
CH186-0370	923	1-E 22
CH186-0371	923	1-E 22
CH186-0371	925	1-E 22
CH186-0372	925	1-E 22
CH186-0375	923	1-E 22
CH186-0376	923	1-E 22
CH186-0996	969	1-F 2
CH186-0996	971	1-F 3
CH186-0997	969	1-F 2
CH186-0997	971	1-F 3
CH186-0998	969	1-F 2
CH186-1000	963	1-F 2
CH186-1069	1001	1-F 6
CH186-1069	1003	1-F 6
CH186-1081	1001	1-F 6
CH186-1094	1001	1-F 6
CH186-1096	1001	1-F 6
CH186-1682	1067	1-F 12
CH186-3735	1189	1-F 24
CH186-3735	1191	1-G 1
CH186-4955	813	1-E 11
CH186-5137	813	1-E 11
CH186-5862	191	1-B 21
CH187-4902	1059	1-F 11
CH187-4902	1061	1-F 12
CH187-4917	1075	1-F 13
CH187-6297	751	1-E 5
CH187-6297	755	1-E 5
CH187-6297	761	1-E 6
CH187-6486	751	1-E 5
CH187-6486	755	1-E 5
CH187-6486	761	1-E 6
CH187-9018	833	1-E 13
CH187-9018	835	1-E 13
CH187-9630	923	1-E 22
CH188-3640	913	1-E 21
CH188-3640	917	1-E 21
CH188-3640	919	1-E 21
CH188-7789	931	1-E 23
CH188-9637	887	1-E 18
CH188-9644	265	1-C 4
CH188-9644	267	1-C 4
CH189-3284	1003	1-F 6
CH189-4882	965	1-F 2
CH189-4888	965	1-F 2
CH189-4906	965	1-F 2
CH189-4907	965	1-F 2
CH189-4911	961	1-F 2
CH189-4911	965	1-F 2
CH189-6001	963	1-F 2
CH189-6001	967	1-F 2
CH189-6397	965	1-F 2
CH189-8610	1193	1-G 1
CH189-8610	1263	1-G 8
CH190-0430	751	1-E 5
CH190-0430	755	1-E 5
CH190-0431	761	1-E 6
CH190-2584	957	1-F 1
CH190-2584	959	1-F 1
CH190-2611	1005	1-F 6
CH190-2612	1005	1-F 6
CH190-2615	959	1-F 1
CH190-2623	811	1-E 11
CH190-2634	989	1-F 4
CH190-2634	991	1-F 5
CH190-3120	883	1-E 18
CH190-3391	693	1-D 23
CH190-3391	695	1-D 23
CH190-3576	687	1-D 22
CH190-3583	687	1-D 22
CH190-6507	885	1-E 18
CH190-6508	889	1-E 18
CH190-6516	883	1-E 18
CH190-6518	883	1-E 18
CH190-6519	883	1-E 18

Part No.	Page	Grid
CH190-6520	883	1-E 18
CH190-6523	883	1-E 18
CH190-6528	887	1-E 18
CH191-1780	1067	1-F 12
CH191-3701	1175	1-F 23
CH191-6944	809	1-E 10
CH191-8010	1257	1-G 7
CH191-9311	833	1-E 13
CH191-9311	835	1-E 13
CH192-4765	1027	1-F 8
CH192-4765	1029	1-F 8
CH192-4767	1073	1-F 13
CH192-5173	611	1-D 15
CH192-6280	811	1-E 11
CH192-6280	977	1-F 3
CH192-6280	979	1-F 3
CH192-6280	981	1-F 4
CH192-6280	983	1-F 4
CH192-6280	985	1-F 4
CH192-6280	987	1-F 4
CH192-6389	741	1-E 4
CH192-7054	1111	1-F 17
CH192-7054	1113	1-F 17
CH192-7054	1115	1-F 17
CH192-7111	921	1-E 22
CH192-8841	859	1-E 15
CH193-1036	939	1-E 23
CH193-5914	621	1-D 16
CH193-5914	679	1-D 21
CH193-5914	681	1-D 22
CH193-5914	735	1-E 3
CH193-5914	861	1-E 16
CH193-5914	971	1-F 3
CH193-5914	995	1-F 5
CH193-5914	1177	1-F 23
CH193-5914	1179	1-F 23
CH193-5914	1189	1-F 24
CH193-5915	579	1-D 11
CH193-5915	677	1-D 21
CH193-5915	693	1-D 23
CH193-5915	695	1-D 23
CH193-5916	621	1-D 16
CH194-4168	121	1-B 14
CH194-4168	123	1-B 14
CH194-4168	125	1-B 14
CH194-4650	939	1-E 23
CH194-4651	939	1-E 23
CH194-6725	761	1-E 6
CH194-6848	883	1-E 18
CH194-7620	377	1-C 15
CH194-8673	879	1-E 17
CH195-1104	667	1-D 20
CH195-1104	669	1-D 20
CH195-2600	1121	1-F 18
CH195-2600	1123	1-F 18
CH195-2601	1121	1-F 18
CH195-2601	1123	1-F 18
CH195-2602	1121	1-F 18
CH195-2602	1123	1-F 18
CH195-2607	1121	1-F 18
CH195-2607	1123	1-F 18
CH195-2608	1121	1-F 18
CH195-2608	1123	1-F 18
CH195-2609	1121	1-F 18
CH195-2609	1123	1-F 18
CH195-2614	1121	1-F 18
CH195-2614	1123	1-F 18
CH195-2626	1079	1-F 13
CH195-2626	1083	1-F 14
CH195-7925	1023	1-F 8
CH195-7925	1025	1-F 8
CH196-2881	1121	1-F 18
CH196-2881	1123	1-F 18
CH196-3017	957	1-F 1
CH196-3019	959	1-F 1
CH196-3019	989	1-F 4
CH196-3019	991	1-F 5
CH196-3022	957	1-F 1
CH196-3024	811	1-E 11
CH196-3025	989	1-F 4
CH196-3025	991	1-F 5
CH196-3030	989	1-F 4
CH196-3030	991	1-F 5
CH196-3034	989	1-F 4
CH196-3034	991	1-F 5
CH196-3041	971	1-F 3
CH196-3042	971	1-F 3
CH196-3698	1175	1-F 23
CH196-3699	1175	1-F 23
CH196-4250	945	1-E 24
CH196-4254	945	1-E 24
CH196-7341	273	1-C 5
CH196-9321	1257	1-G 7
CH196-9444	945	1-E 24
CH197-4832	993	1-F 5
CH197-5854	1177	1-F 23
CH197-5910	741	1-E 4
CH198-1544	947	1-E 24
CH198-1963	757	1-E 5
CH198-8789	811	1-E 11
CH198-8789	813	1-E 11
CH199-7718	993	1-F 5
CH2A-1314	859	1-E 15
CH2A-1314	973	1-F 3
CH2A-3211	1065	1-F 12
CH2A-3211	1257	1-G 7
CH2B-0858	179	1-B 19
CH2B-0858	181	1-B 20
CH2B-0858	191	1-B 21
CH2B-0941	93	1-B 11
CH2B-2404	749	1-E 4
CH2D-9454	683	1-D 22
CH2D-9455	683	1-D 22
CH2H-3429	211	1-B 23
CH2H-3920	329	1-C 10
CH2H-3920	1189	1-F 24
CH2H-3934	97	1-B 11
CH2H-3934	103	1-B 12
CH2H-3934	867	1-E 16
CH2H-3934	869	1-E 16
CH2J-3961	813	1-E 11
CH2J-6356	171	1-B 19
CH2J-6356	733	1-E 3
CH2J-6356	743	1-E 4
CH2J-8163	813	1-E 11
CH2K-4973	93	1-B 11
CH2K-6830	965	1-F 2
CH2K-8199	399	1-C 17
CH2K-8199	799	1-E 9
CH2L-6726	211	1-B 23
CH2M-1908	845	1-E 14
CH2M-5795	617	1-D 15
CH2N-7456	381	1-C 16
CH2P-2717	1257	1-G 7
CH2R-2376	1095	1-F 15
CH2R-8613	147	1-B 16
CH2S-3440	191	1-B 21
CH200-0010	957	1-F 1
CH200-0010	989	1-F 4
CH200-0010	991	1-F 5
CH200-4328	93	1-B 11
CH200-4349	751	1-E 5
CH200-4349	755	1-E 5
CH200-4359	751	1-E 5
CH200-4359	755	1-E 5
CH200-4379	751	1-E 5
CH200-4379	755	1-E 5
CH200-4384	743	1-E 4
CH200-6208	265	1-C 4
CH200-6208	269	1-C 4
CH200-8649	93	1-B 11
CH200-8649	197	1-B 21
CH200-8649	199	1-B 21
CH200-8649	201	1-B 22
CH200-8649	205	1-B 22
CH200-8708	989	1-F 4
CH200-8708	991	1-F 5
CH200-8747	969	1-F 2
CH200-8749	969	1-F 2
CH200-8749	971	1-F 3
CH200-8751	969	1-F 2
CH200-8751	1017	1-F 7
CH201-0780	939	1-E 23
CH201-7614	799	1-E 9
CH201-7615	797	1-E 9
CH201-8106	971	1-F 3
CH201-8106	1005	1-F 6
CH201-9691	273	1-C 5
CH201-9692	273	1-C 5
CH202-2373	167	1-B 18
CH202-2373	169	1-B 18
CH202-2592	877	1-E 17
CH202-2593	877	1-E 17
CH202-2595	877	1-E 17
CH202-8633	683	1-D 22
CH202-9222	555	1-D 9
CH202-9222	557	1-D 9
CH202-9222	559	1-D 9
CH202-9222	561	1-D 10
CH202-9222	563	1-D 10
CH202-9701	683	1-D 22
CH203-0343	791	1-E 9
CH203-3169	791	1-E 9
CH203-8550	777	1-E 7
CH204-5041	131	1-B 15
CH204-7458	377	1-C 15
CH204-7458	383	1-C 16
CH205-3692	841	1-E 14
CH205-3692	857	1-E 15
CH205-5366	167	1-B 18
CH205-5366	169	1-B 18
CH205-6395	881	1-E 18
CH205-6397	781	1-E 8
CH206-0325	179	1-B 19
CH206-0325	181	1-B 20
CH206-2491	1085	1-F 14
CH206-4627	969	1-F 2
CH206-4627	971	1-F 3
CH206-4628	969	1-F 2
CH206-4636	959	1-F 1
CH206-4640	989	1-F 4
CH206-4640	991	1-F 5
CH206-4708	625	1-D 16
CH206-5823	1193	1-G 1
CH206-6337	867	1-E 16
CH206-6337	869	1-E 16
CH206-6337	877	1-E 17
CH206-9017	869	1-E 16
CH206-9017	883	1-E 18
CH206-9019	867	1-E 16
CH206-9019	885	1-E 18
CH207-2021	1065	1-F 12
CH207-2021	1079	1-F 13
CH207-2021	1083	1-F 14
CH207-2023	1075	1-F 13
CH207-2024	1075	1-F 13
CH207-2032	173	1-B 19
CH207-2039	1065	1-F 12
CH207-3629	871	1-E 17
CH207-3629	879	1-E 17
CH207-5359	849	1-E 14
CH207-5359	851	1-E 15
CH207-5360	849	1-E 14
CH207-5360	851	1-E 15
CH207-6797	331	1-C 11
CH208-0765	853	1-E 15
CH208-1663	667	1-D 20
CH208-1663	669	1-D 20
CH208-2404	1091	1-F 15
CH208-2404	1093	1-F 15
CH208-2404	1185	1-F 24
CH208-2404	1187	1-F 24
CH208-2878	1101	1-F 16
CH208-4830	175	1-B 19
CH208-5384	177	1-B 19
CH208-5521	1179	1-F 23
CH208-6662	1071	1-F 13
CH208-9482	347	1-C 12
CH208-9635	1191	1-G 1
CH208-9829	747	1-E 4
CH208-9830	747	1-E 4
CH208-9844	849	1-E 14
CH208-9844	851	1-E 15
CH208-9850	841	1-E 14
CH208-9850	857	1-E 15
CH208-9927	819	1-E 11
CH208-9927	821	1-E 12
CH208-9972	843	1-E 14
CH208-9973	843	1-E 14
CH208-9974	843	1-E 14
CH209-0620	167	1-B 18
CH209-3394	135	1-B 15
CH209-3395	135	1-B 15
CH209-4481	1191	1-G 1
CH209-4482	1191	1-G 1
CH209-6417	331	1-C 11
CH209-7451	921	1-E 22
CH209-7452	921	1-E 22
CH209-7496	913	1-E 21
CH209-7498	807	1-E 10
CH209-8296	923	1-E 22
CH209-9078	879	1-E 17
CH209-9079	879	1-E 17
CH209-9233	1105	1-F 16
CH209-9680	923	1-E 22
CH209-9921	931	1-E 23
CH209-9927	931	1-E 23
CH209-9947	931	1-E 23
CH209-9955	931	1-E 23
CH209-9957	931	1-E 23
CH209-9961	931	1-E 23
CH209-9962	931	1-E 23
CH210-0159	849	1-E 14
CH210-0159	851	1-E 15
CH210-0179	879	1-E 17
CH210-0181	837	1-E 13
CH210-0183	837	1-E 13
CH210-0780	879	1-E 17
CH210-1993	931	1-E 23
CH210-2265	195	1-B 21
CH210-2265	585	1-D 12
CH210-4352	581	1-D 12
CH210-4352	1095	1-F 15
CH210-4570	307	1-C 8
CH210-4570	309	1-C 8
CH210-7488	971	1-F 3
CH210-7492	971	1-F 3
CH210-7499	971	1-F 3
CH210-7518	971	1-F 3
CH210-7531	1003	1-F 6
CH210-7532	1003	1-F 6
CH211-0912	837	1-E 13
CH211-2722	997	1-F 5
CH211-2723	997	1-F 5
CH211-2724	997	1-F 5
CH211-2725	997	1-F 5
CH211-3502	847	1-E 14
CH211-3590	197	1-B 21
CH211-3590	199	1-B 21
CH211-3590	203	1-B 22

INDEX

Part No.	Page	Grid
CH211-3590	205	1-B 22
CH211-4423	573	1-D 11
CH211-4423	575	1-D 11
CH211-4837	1193	1-G 1
CH211-8202	995	1-F 5
CH211-8713	167	1-B 18
CH211-8713	169	1-B 18
CH211-9968	993	1-F 5
CH212-0279	197	1-B 21
CH212-0279	199	1-B 21
CH212-0279	203	1-B 22
CH212-0279	205	1-B 22
CH212-0279	993	1-F 5
CH212-0297	741	1-E 4
CH212-0302	741	1-E 4
CH212-0310	741	1-E 4
CH212-3416	1079	1-F 13
CH212-3416	1081	1-F 14
CH212-3416	1083	1-F 14
CH212-3585	747	1-E 4
CH212-3812	181	1-B 20
CH212-4443	365	1-C 14
CH212-4443	735	1-E 3
CH212-4443	1073	1-F 13
CH212-6998	359	1-C 13
CH213-1783	243	1-C 2
CH213-1827	697	1-D 23
CH213-1827	699	1-D 23
CH213-4497	591	1-D 13
CH213-6199	971	1-F 3
CH213-6273	993	1-F 5
CH213-8872	993	1-F 5
CH214-1071	1007	1-F 6
CH214-2184	1075	1-F 13
CH214-4661	677	1-D 21
CH214-9203	883	1-E 18
CH214-9441	171	1-B 19
CH215-1382	267	1-C 4
CH215-6489	179	1-B 19
CH215-6489	181	1-B 20
CH215-9463	671	1-D 21
CH215-9464	683	1-D 22
CH216-2628	1023	1-F 8
CH216-2628	1025	1-F 8
CH216-2628	1027	1-F 8
CH216-2628	1029	1-F 8
CH216-2628	1189	1-F 24
CH216-2628	1191	1-G 1
CH216-4098	927	1-E 22
CH216-6428	603	1-D 14
CH216-6428	605	1-D 14
CH216-7114	929	1-E 22
CH216-7114	933	1-E 23
CH216-7114	935	1-E 23
CH216-7114	937	1-E 23
CH216-7115	935	1-E 23
CH216-7115	937	1-E 23
CH216-7116	771	1-E 7
CH216-7117	771	1-E 7
CH216-7118	771	1-E 7
CH216-7616	1121	1-F 18
CH216-7617	271	1-C 5
CH216-7617	1121	1-F 18
CH216-8187	931	1-E 23
CH216-8189	931	1-E 23
CH216-8190	931	1-E 23
CH216-8191	931	1-E 23
CH216-8275	1203	1-G 2
CH216-9085	355	1-C 13
CH216-9085	361	1-C 14
CH216-9085	1073	1-F 13
CH216-9165	1095	1-F 15
CH217-2130	1125	1-F 18
CH217-2131	1125	1-F 18
CH217-2132	1177	1-F 23
CH217-5909	259	1-C 3
CH217-5909	261	1-C 4
CH217-5909	581	1-D 12
CH217-5909	599	1-D 13
CH217-5909	601	1-D 14
CH217-5909	1043	1-F 10
CH217-5909	1121	1-F 18
CH217-5909	1123	1-F 18
CH218-2891	149	1-B 16
CH218-2892	149	1-B 16
CH218-2969	993	1-F 5
CH218-3575	741	1-E 4
CH219-0664	349	1-C 12
CH219-4673	357	1-C 13
CH219-4673	361	1-C 14
CH219-5676	837	1-E 13
CH219-5677	837	1-E 13
CH219-5678	837	1-E 13
CH219-5679	837	1-E 13
CH219-7932	843	1-E 14
CH219-9653	747	1-E 4
CH220-8678	175	1-B 19
CH220-8678	177	1-B 19
CH221-0050	741	1-E 4
CH221-0051	741	1-E 4
CH221-2002	183	1-B 20
CH221-2002	191	1-B 21
CH221-2003	191	1-B 21
CH221-3265	191	1-B 21
CH222-0527	845	1-E 14
CH222-0527	855	1-E 15
CH222-4435	1121	1-F 18
CH223-9254	841	1-E 14
CH223-9254	857	1-E 15
CH223-9804	991	1-F 5
CH225-5203	843	1-E 14
CH225-6215	1059	1-F 11
CH226-0372	731	1-E 3
CH226-0372	733	1-E 3
CH226-2711	731	1-E 3
CH226-2711	733	1-E 3
CH226-6489	819	1-E 11
CH226-6489	821	1-E 12
CH227-8229	141	1-B 16
CH3B-0551	191	1-B 21
CH3B-2263	883	1-E 18
CH3B-4501	359	1-C 13
CH3B-4501	361	1-C 14
CH3B-4501	377	1-C 15
CH3B-4501	385	1-C 16
CH3B-4501	1089	1-F 14
CH3B-4503	173	1-B 19
CH3B-4505	97	1-B 11
CH3B-4505	103	1-B 12
CH3B-4605	1095	1-F 15
CH3B-4607	617	1-D 15
CH3B-4610	621	1-D 16
CH3B-4611	603	1-D 14
CH3B-4611	605	1-D 14
CH3B-4611	969	1-F 2
CH3B-4611	971	1-F 3
CH3B-4615	1073	1-F 13
CH3B-4617	733	1-E 3
CH3B-4617	735	1-E 3
CH3B-4617	957	1-F 1
CH3B-4617	959	1-F 1
CH3B-4617	969	1-F 2
CH3B-4629	589	1-D 12
CH3B-8486	667	1-D 20
CH3B-8486	669	1-D 20
CH3C-6969	273	1-C 5
CH3C-6969	351	1-C 13
CH3C-6969	361	1-C 14
CH3C-6969	371	1-C 15
CH3D-6209	633	1-D 17
CH3D-9132	693	1-D 23
CH3D-9132	695	1-D 23
CH3D-9133	693	1-D 23
CH3D-9133	695	1-D 23
CH3E-3363	279	1-C 5
CH3E-3369	279	1-C 5
CH3E-3371	395	1-C 17
CH3E-3389	329	1-C 10
CH3E-3389	1189	1-F 24
CH3E-4289	931	1-E 23
CH3E-4296	923	1-E 22
CH3E-4297	751	1-E 5
CH3E-4297	755	1-E 5
CH3E-4297	761	1-E 6
CH3E-4298	931	1-E 23
CH3E-4352	1091	1-F 15
CH3E-4352	1093	1-F 15
CH3E-4353	1059	1-F 11
CH3E-4353	1061	1-F 12
CH3E-4883	115	1-B 13
CH3E-4883	117	1-B 13
CH3E-6600	1027	1-F 8
CH3E-6600	1029	1-F 8
CH3E-6762	753	1-E 5
CH3E-6762	757	1-E 5
CH3E-6762	761	1-E 6
CH3E-6762	833	1-E 13
CH3E-6762	835	1-E 13
CH3E-7449	93	1-B 11
CH3E-8008	781	1-E 8
CH3E-8020	225	1-B 24
CH3E-8020	1127	1-F 18
CH3E-8020	1177	1-F 23
CH3E-9860	247	1-C 2
CH3E-9860	249	1-C 2
CH3E-9860	251	1-C 3
CH3E-9860	253	1-C 3
CH3E-9860	255	1-C 3
CH3E-9860	257	1-C 3
CH3E-9860	617	1-D 15
CH3E-9865	1257	1-G 7
CH3F-9556	1189	1-F 24
CH3F-9556	1191	1-G 1
CH3G-0785	927	1-E 22
CH3K-0360	667	1-D 20
CH3K-0360	669	1-D 20
CH3K-0360	735	1-E 3
CH3K-0360	741	1-E 4
CH3K-0360	745	1-E 4
CH3K-0360	747	1-E 4
CH3K-0360	825	1-E 12
CH3K-0360	841	1-E 14
CH3K-0360	847	1-E 14
CH3K-0360	853	1-E 15
CH3K-0360	855	1-E 15
CH3K-0360	857	1-E 15
CH3K-0360	859	1-E 15
CH3K-0360	911	1-E 21
CH3K-0360	915	1-E 21
CH3K-0360	925	1-E 22
CH3K-0360	993	1-F 5
CH3K-0360	995	1-F 5
CH3K-0360	997	1-F 5
CH3K-0360	999	1-F 5
CH3K-0715	881	1-E 18
CH3K-9089	621	1-D 16
CH3P-3547	1075	1-F 13
CH3S-5096	1023	1-F 8
CH3S-5096	1025	1-F 8
CH3S-5096	1027	1-F 8
CH3S-5096	1029	1-F 8
CH3S-5096	1263	1-G 8
CH3S-8664	179	1-B 19
CH3S-8664	181	1-B 20
CH3S-8664	197	1-B 21
CH3S-8664	199	1-B 21
CH3S-8664	203	1-B 22
CH3S-8664	205	1-B 22
CH3S-8664	759	1-E 5
CH3S-8664	1099	1-F 15
CH3S-8665	819	1-E 11
CH3S-8665	821	1-E 12
CH3S-9233	809	1-E 10
CH3S-9557	269	1-C 4
CH3T-0851	259	1-C 3
CH3T-0851	261	1-C 4
CH3T-8607	353	1-C 13
CH3T-8607	359	1-C 13
CH3T-8747	407	1-C 18
CH3W-6116	973	1-F 3
CH3W-7412	617	1-D 15
CH4B-2047	381	1-C 16
CH4B-4274	173	1-B 19
CH4B-4274	211	1-B 23
CH4B-4274	251	1-C 3
CH4B-4274	255	1-C 3
CH4B-4274	257	1-C 3
CH4B-4274	259	1-C 3
CH4B-4274	261	1-C 4
CH4B-4274	381	1-C 16
CH4B-9302	93	1-B 11
CH4D-2619	779	1-E 7
CH4D-4431	667	1-D 20
CH4D-4431	669	1-D 20
CH4D-7388	1099	1-F 15
CH4D-7388	1127	1-F 18
CH4D-7733	741	1-E 4
CH4D-7735	741	1-E 4
CH4D-7735	841	1-E 14
CH4D-7735	857	1-E 15
CH4D-7794	377	1-C 15
CH4D-7794	381	1-C 16
CH4D-7794	385	1-C 16
CH4D-9517	177	1-B 19
CH4D-9517	373	1-C 15
CH4D-9517	379	1-C 15
CH4E-1251	171	1-B 19
CH4E-1251	733	1-E 3
CH4E-2229	361	1-C 14
CH4E-7808	1073	1-F 13
CH4H-7655	1109	1-F 16
CH4I-3038	273	1-C 5
CH4I-5399	183	1-B 20
CH4J-0522	853	1-E 15
CH4J-2036	589	1-D 12
CH4J-2701	743	1-E 4
CH4J-5050	159	1-B 17
CH4J-5050	161	1-B 18
CH4K-2039	93	1-B 11
CH4K-7239	683	1-D 22
CH4K-8302	95	1-B 11
CH4K-8302	99	1-B 11
CH4K-8341	173	1-B 19
CH4K-8341	1075	1-F 13
CH4K-8864	197	1-B 21
CH4K-8864	199	1-B 21
CH4K-8864	203	1-B 22
CH4K-8864	205	1-B 22
CH4K-8864	377	1-C 15
CH4K-8864	385	1-C 16
CH4K-8864	753	1-E 5
CH4K-8864	757	1-E 5
CH4K-8864	845	1-E 14
CH4K-8864	855	1-E 15
CH4K-9097	581	1-D 12
CH4L-3641	997	1-F 5
CH4L-8183	971	1-F 3
CH4M-7668	879	1-E 17
CH4P-3966	97	1-B 11
CH4P-3966	103	1-B 12

Part No.	Page	Grid
CH4P-3977	97	1-B 11
CH4P-3977	103	1-B 12
CH4P-7428	377	1-C 15
CH4P-7428	385	1-C 16
CH4P-7428	973	1-F 3
CH4P-7581	203	1-B 22
CH4P-7581	205	1-B 22
CH4P-7581	359	1-C 13
CH4P-7581	373	1-C 15
CH4P-7581	375	1-C 15
CH4P-7581	377	1-C 15
CH4P-7581	379	1-C 15
CH4P-7581	381	1-C 16
CH4P-7581	385	1-C 16
CH4P-7581	759	1-E 5
CH4P-7581	1007	1-F 6
CH4P-8134	359	1-C 13
CH4S-1962	741	1-E 4
CH4S-1962	839	1-E 13
CH4S-1962	999	1-F 5
CH4S-1962	1099	1-F 15
CH4V-2264	1097	1-F 15
CH4V-2445	883	1-E 18
CH4W-1203	107	1-B 12
CH4W-1203	109	1-B 12
CH4W-1203	111	1-B 13
CH4W-1204	107	1-B 12
CH4W-1204	109	1-B 12
CH4W-1204	111	1-B 13
CH4W-2042	107	1-B 12
CH4W-2042	109	1-B 12
CH4W-2042	111	1-B 13
CH5B-9192	753	1-E 5
CH5B-9192	757	1-E 5
CH5C-2874	251	1-C 3
CH5C-2874	255	1-C 3
CH5C-2874	257	1-C 3
CH5C-2874	355	1-C 13
CH5C-2874	359	1-C 13
CH5C-8312	357	1-C 13
CH5C-8312	361	1-C 14
CH5C-8312	377	1-C 15
CH5C-8312	385	1-C 16
CH5C-8312	1073	1-F 13
CH5D-4204	997	1-F 5
CH5D-5958	791	1-E 9
CH5D-6539	923	1-E 22
CH5D-8159	1001	1-F 6
CH5D-8159	1003	1-F 6
CH5E-7045	945	1-E 24
CH5F-1648	133	1-B 15
CH5F-3999	813	1-E 11
CH5F-5434	93	1-B 11
CH5F-5434	99	1-B 11
CH5J-3079	733	1-E 3
CH5J-4715	197	1-B 21
CH5J-4715	199	1-B 21
CH5J-4715	203	1-B 22
CH5J-4715	205	1-B 22
CH5J-7154	965	1-F 2
CH5K-1078	683	1-D 22
CH5K-3294	175	1-B 19
CH5L-4758	797	1-E 9
CH5M-2894	733	1-E 3
CH5P-0537	1065	1-F 12
CH5P-0767	133	1-B 15
CH5P-0767	135	1-B 15
CH5P-0767	1101	1-F 16
CH5P-1075	93	1-B 11
CH5P-1075	99	1-B 11
CH5P-1259	163	1-B 18
CH5P-1259	165	1-B 18
CH5P-1420	145	1-B 16
CH5P-1420	147	1-B 16
CH5P-1420	845	1-E 14
CH5P-1420	855	1-E 15
CH5P-1442	145	1-B 16
CH5P-1442	147	1-B 16
CH5P-1442	403	1-C 18
CH5P-1442	405	1-C 18
CH5P-1442	845	1-E 14
CH5P-3602	571	1-D 11
CH5P-4115	211	1-B 23
CH5P-4115	345	1-C 12
CH5P-4115	571	1-D 11
CH5P-4115	581	1-D 12
CH5P-4115	597	1-D 13
CH5P-4115	599	1-D 13
CH5P-4115	601	1-D 14
CH5P-4115	603	1-D 14
CH5P-4115	613	1-D 15
CH5P-4115	973	1-F 3
CH5P-4115	1023	1-F 8
CH5P-4115	1025	1-F 8
CH5P-4115	1027	1-F 8
CH5P-4115	1029	1-F 8
CH5P-4115	1121	1-F 18
CH5P-4115	1123	1-F 18
CH5P-4115	1191	1-G 1
CH5P-4829	1023	1-F 8
CH5P-4829	1025	1-F 8
CH5P-4829	1027	1-F 8
CH5P-4892	847	1-E 14
CH5P-4924	845	1-E 14
CH5P-5727	579	1-D 11
CH5P-5777	667	1-D 20
CH5P-5777	669	1-D 20
CH5P-6129	1029	1-F 8
CH5P-6442	175	1-B 19
CH5P-6442	177	1-B 19
CH5P-6442	667	1-D 20
CH5P-6442	669	1-D 20
CH5P-7468	847	1-E 14
CH5P-7468	853	1-E 15
CH5P-7469	847	1-E 14
CH5P-7469	853	1-E 15
CH5P-7684	881	1-E 18
CH5P-7701	183	1-B 20
CH5P-7803	1189	1-F 24
CH5P-7808	99	1-B 11
CH5P-7958	1211	1-G 3
CH5P-7958	1235	1-G 5
CH5P-8087	947	1-E 24
CH5P-8119	737	1-E 3
CH5P-8244	879	1-E 17
CH5P-8247	1127	1-F 18
CH5P-8440	679	1-D 21
CH5P-8440	681	1-D 22
CH5P-8444	847	1-E 14
CH5P-8444	853	1-E 15
CH5P-8500	353	1-C 13
CH5P-8500	361	1-C 14
CH5P-8500	1091	1-F 15
CH5P-8500	1093	1-F 15
CH5P-8500	1211	1-G 3
CH5P-8500	1221	1-G 4
CH5P-8500	1229	1-G 4
CH5P-8500	1235	1-G 5
CH5P-8500	1257	1-G 7
CH5P-8500	1263	1-G 8
CH5P-8502	1257	1-G 7
CH5P-8837	555	1-D 9
CH5P-8837	557	1-D 9
CH5P-8837	561	1-D 10
CH5P-8905	995	1-F 5
CH5P-9085	679	1-D 21
CH5P-9085	681	1-D 22
CH5P-9186	729	1-E 2
CH5P-9186	805	1-E 10
CH5P-9186	807	1-E 10
CH5P-9186	923	1-E 22
CH5P-9186	925	1-E 22
CH5P-9186	927	1-E 22
CH5P-9205	601	1-D 14
CH5P-9262	939	1-E 23
CH5P-9517	845	1-E 14
CH5P-9517	855	1-E 15
CH5P-9651	671	1-D 21
CH5P-9652	671	1-D 21
CH5R-5676	809	1-E 10
CH5R-5718	809	1-E 10
CH5R-5780	809	1-E 10
CH5R-6304	809	1-E 10
CH5R-6305	799	1-E 9
CH5R-6868	809	1-E 10
CH5S-9062	107	1-B 12
CH5S-9062	109	1-B 12
CH5S-9062	111	1-B 13
CH5V-0354	973	1-F 3
CH5V-1496	1177	1-F 23
CH5W-9411	771	1-E 7
CH6B-1032	845	1-E 14
CH6C-3679	129	1-B 14
CH6D-1641	749	1-E 4
CH6D-1641	995	1-F 5
CH6D-1641	997	1-F 5
CH6D-3025	211	1-B 23
CH6D-4244	741	1-E 4
CH6D-4246	179	1-B 19
CH6D-4246	181	1-B 20
CH6D-4246	183	1-B 20
CH6D-4246	741	1-E 4
CH6D-4246	995	1-F 5
CH6D-7146	871	1-E 17
CH6E-1571	891	1-E 19
CH6E-1607	941	1-E 24
CH6E-3268	939	1-E 23
CH6E-3269	939	1-E 23
CH6E-3272	939	1-E 23
CH6E-3273	939	1-E 23
CH6E-3274	939	1-E 23
CH6E-3275	939	1-E 23
CH6E-3276	939	1-E 23
CH6E-3343	887	1-E 18
CH6E-4102	791	1-E 9
CH6E-4351	881	1-E 18
CH6E-4358	891	1-E 19
CH6E-4363	891	1-E 19
CH6E-4364	891	1-E 19
CH6E-4365	891	1-E 19
CH6E-4366	891	1-E 19
CH6E-4367	891	1-E 19
CH6E-4370	891	1-E 19
CH6E-4373	891	1-E 19
CH6E-4374	891	1-E 19
CH6E-4382	781	1-E 8
CH6E-4383	781	1-E 8
CH6E-4385	881	1-E 18
CH6E-4392	781	1-E 8
CH6E-4392	941	1-E 24
CH6E-4401	941	1-E 24
CH6E-4614	881	1-E 18
CH6E-6528	939	1-E 23
CH6E-6536	939	1-E 23
CH6E-6537	939	1-E 23
CH6E-6538	939	1-E 23
CH6E-6539	939	1-E 23
CH6E-6540	939	1-E 23
CH6F-0253	223	1-B 24
CH6H-3956	107	1-B 12
CH6H-3956	109	1-B 12
CH6H-4006	1193	1-G 1
CH6I-1418	209	1-B 22
CH6I-1418	211	1-B 23
CH6I-1418	213	1-B 23
CH6I-1418	215	1-B 23
CH6I-1418	377	1-C 15
CH6I-1418	383	1-C 16
CH6I-2505	155	1-B 17
CH6I-2506	155	1-B 17
CH6I-2509	157	1-B 17
CH6I-2510	157	1-B 17
CH6I-4465	155	1-B 17
CH6J-2245	377	1-C 15
CH6J-2245	381	1-C 16
CH6K-3274	621	1-D 16
CH6K-3632	957	1-F 1
CH6K-6307	667	1-D 20
CH6K-6307	669	1-D 20
CH6K-6307	881	1-E 18
CH6K-6361	1027	1-F 8
CH6K-6361	1029	1-F 8
CH6K-9070	1015	1-F 7
CH6K-9632	1193	1-G 1
CH6L-3966	733	1-E 3
CH6M-5062	945	1-E 24
CH6N-6984	593	1-D 13
CH6N-6984	621	1-D 16
CH6N-6984	623	1-D 16
CH6R-3185	159	1-B 17
CH6R-7943	883	1-E 18
CH6R-7943	885	1-E 18
CH6S-5993	375	1-C 15
CH6S-5993	385	1-C 16
CH6S-6031	671	1-D 21
CH6S-6032	671	1-D 21
CH6T-6158	159	1-B 17
CH6T-6158	161	1-B 18
CH6T-7298	245	1-C 2
CH6V-0894	211	1-B 23
CH6V-1197	787	1-E 8
CH6V-1197	793	1-E 9
CH6V-1506	1001	1-F 6
CH6V-1506	1003	1-F 6
CH6V-1520	845	1-E 14
CH6V-1657	667	1-D 20
CH6V-1657	669	1-D 20
CH6V-2405	1211	1-G 3
CH6V-2405	1235	1-G 5
CH6V-3326	791	1-E 9
CH6V-3922	931	1-E 23
CH6V-5049	179	1-B 19
CH6V-5049	181	1-B 20
CH6V-5210	259	1-C 3
CH6V-5210	261	1-C 4
CH6V-5326	781	1-E 8
CH6V-5326	881	1-E 18
CH6V-5586	781	1-E 8
CH6V-5586	941	1-E 24
CH6V-5839	615	1-D 15
CH6V-5839	1127	1-F 18
CH6V-5839	1177	1-F 23
CH6V-6228	945	1-E 24
CH6V-6580	929	1-E 22
CH6V-6580	933	1-E 23
CH6V-6580	935	1-E 23
CH6V-6580	937	1-E 23
CH6V-6757	667	1-D 20
CH6V-6757	669	1-D 20
CH6V-7688	957	1-F 1
CH6V-7688	959	1-F 1
CH6V-7723	889	1-E 18
CH6V-7743	571	1-D 11
CH6V-7744	599	1-D 13
CH6V-7744	603	1-D 14
CH6V-7744	623	1-D 16
CH6V-8130	1003	1-F 6
CH6V-8183	735	1-E 3
CH6V-8183	1073	1-F 13
CH6V-8225	321	1-C 10

INDEX

Part No.	Page	Grid
CH6V-8225	959	1-F 1
CH6V-8351	941	1-E 24
CH6V-8352	939	1-E 23
CH6V-8362	1071	1-F 13
CH6V-8369	329	1-C 10
CH6V-8369	1189	1-F 24
CH6V-8376	207	1-B 22
CH6V-8376	359	1-C 13
CH6V-8376	361	1-C 14
CH6V-8398	175	1-B 19
CH6V-8398	177	1-B 19
CH6V-8398	741	1-E 4
CH6V-8398	745	1-E 4
CH6V-8398	747	1-E 4
CH6V-8398	749	1-E 4
CH6V-8398	819	1-E 11
CH6V-8398	821	1-E 12
CH6V-8398	847	1-E 14
CH6V-8398	853	1-E 15
CH6V-8398	857	1-E 15
CH6V-8398	859	1-E 15
CH6V-8398	945	1-E 24
CH6V-8398	993	1-F 5
CH6V-8398	995	1-F 5
CH6V-8398	997	1-F 5
CH6V-8399	929	1-E 22
CH6V-8399	933	1-E 23
CH6V-8399	935	1-E 23
CH6V-8399	937	1-E 23
CH6V-8548	273	1-C 5
CH6V-8554	745	1-E 4
CH6V-8554	747	1-E 4
CH6V-8628	755	1-E 5
CH6V-8639	179	1-B 19
CH6V-8639	181	1-B 20
CH6V-8723	841	1-E 14
CH6V-8928	1177	1-F 23
CH6V-8931	213	1-B 23
CH6V-8931	215	1-B 23
CH6V-8935	753	1-E 5
CH6V-8935	757	1-E 5
CH6V-8978	883	1-E 18
CH6V-8996	995	1-F 5
CH6V-9003	137	1-B 15
CH6V-9005	853	1-E 15
CH6V-9028	781	1-E 8
CH6V-9028	881	1-E 18
CH6V-9170	995	1-F 5
CH6V-9492	1089	1-F 14
CH6V-9671	361	1-C 14
CH6V-9673	1081	1-F 14
CH6V-9748	107	1-B 12
CH6V-9748	109	1-B 12
CH6V-9748	111	1-B 13
CH6V-9828	753	1-E 5
CH6V-9828	757	1-E 5
CH6V-9829	735	1-E 3
CH6V-9876	183	1-B 20
CH6W-5698	191	1-B 21
CH6Y-0473	671	1-D 21
CH6Y-0473	683	1-D 22
CH6Y-8112	957	1-F 1
CH6Y-8112	959	1-F 1
CH7B-0863	969	1-F 2
CH7C-6178	97	1-B 11
CH7C-6178	103	1-B 12
CH7D-0734	1005	1-F 6
CH7E-4808	107	1-B 12
CH7E-4808	109	1-B 12
CH7E-4808	111	1-B 13
CH7F-3400	1209	1-G 2
CH7F-3400	1211	1-G 3
CH7F-3400	1235	1-G 5
CH7G-4332	671	1-D 21
CH7G-4332	683	1-D 22
CH7G-8839	625	1-D 16
CH7H-1177	209	1-B 22
CH7H-1177	229	1-B 24
CH7J-1309	973	1-F 3
CH7K-1181	145	1-B 16
CH7K-1181	147	1-B 16
CH7K-1181	179	1-B 19
CH7K-1181	181	1-B 20
CH7K-1181	197	1-B 21
CH7K-1181	199	1-B 21
CH7K-1181	201	1-B 22
CH7K-1181	205	1-B 22
CH7K-1181	209	1-B 22
CH7K-1181	211	1-B 23
CH7K-1181	213	1-B 23
CH7K-1181	215	1-B 23
CH7K-1181	265	1-C 4
CH7K-1181	269	1-C 4
CH7K-1181	321	1-C 10
CH7K-1181	345	1-C 12
CH7K-1181	355	1-C 13
CH7K-1181	359	1-C 13
CH7K-1181	375	1-C 15
CH7K-1181	377	1-C 15
CH7K-1181	381	1-C 16
CH7K-1181	383	1-C 16
CH7K-1181	403	1-C 18
CH7K-1181	405	1-C 18
CH7K-1181	679	1-D 21
CH7K-1181	681	1-D 22
CH7K-1181	735	1-E 3
CH7K-1181	739	1-E 3
CH7K-1181	759	1-E 5
CH7K-1181	815	1-E 11
CH7K-1181	1007	1-F 6
CH7K-1181	1099	1-F 15
CH7K-1181	1119	1-F 17
CH7K-1181	1179	1-F 23
CH7K-9205	973	1-F 3
CH7K-9209	973	1-F 3
CH7K-9210	973	1-F 3
CH7K-9211	1015	1-F 7
CH7S-1912	845	1-E 14
CH7S-4244	1191	1-G 1
CH7T-1099	153	1-B 17
CH7T-1099	265	1-C 4
CH7T-1099	579	1-D 11
CH7T-1099	625	1-D 16
CH7T-1099	627	1-D 16
CH7T-1099	697	1-D 23
CH7T-1099	699	1-D 23
CH7T-1099	969	1-F 2
CH7T-1099	1067	1-F 12
CH7T-4532	1063	1-F 12
CH7T-6799	361	1-C 14
CH7T-9793	1023	1-F 8
CH7T-9793	1025	1-F 8
CH7T-9793	1027	1-F 8
CH7T-9793	1029	1-F 8
CH7V-0445	621	1-D 16
CH7W-1890	145	1-B 16
CH7W-1890	147	1-B 16
CH7W-1890	191	1-B 21
CH7W-1890	193	1-B 21
CH7X-0474	729	1-E 2
CH7X-0474	915	1-E 21
CH7X-0515	551	1-D 9
CH7X-0515	553	1-D 9
CH7X-0515	687	1-D 22
CH7X-0515	869	1-E 16
CH7X-0515	871	1-E 17
CH7X-0517	173	1-B 19
CH7X-0533	1259	1-G 7
CH7X-0561	679	1-D 21
CH7X-0561	681	1-D 22
CH7X-0579	617	1-D 15
CH7X-0583	555	1-D 9
CH7X-0583	557	1-D 9
CH7X-0583	559	1-D 9
CH7X-0583	561	1-D 10
CH7X-0583	563	1-D 10
CH7X-0593	611	1-D 15
CH7X-0594	589	1-D 12
CH7X-0605	973	1-F 3
CH7X-0613	573	1-D 11
CH7X-0613	577	1-D 11
CH7X-0618	139	1-B 15
CH7X-0618	195	1-B 21
CH7X-0618	585	1-D 12
CH7X-0618	587	1-D 12
CH7X-0618	589	1-D 12
CH7X-0618	625	1-D 16
CH7X-0618	683	1-D 22
CH7X-0795	735	1-E 3
CH7X-1434	1067	1-F 12
CH7X-1448	403	1-C 18
CH7X-1448	405	1-C 18
CH7X-3374	743	1-E 4
CH7X-3383	819	1-E 11
CH7X-6312	233	1-C 1
CH7X-6312	235	1-C 1
CH7X-6315	209	1-B 22
CH7X-6315	229	1-B 24
CH7X-7729	95	1-B 11
CH7X-7729	101	1-B 12
CH7X-7729	129	1-B 14
CH7X-7729	131	1-B 15
CH7X-7729	141	1-B 16
CH7X-7729	143	1-B 16
CH7X-7729	151	1-B 17
CH7X-7729	153	1-B 17
CH7X-7729	281	1-C 6
CH7X-7729	283	1-C 6
CH7X-7729	327	1-C 10
CH7X-7729	591	1-D 13
CH7X-7729	599	1-D 13
CH7X-7729	603	1-D 14
CH7X-7729	605	1-D 14
CH7X-7729	617	1-D 15
CH7X-7729	625	1-D 16
CH7X-7729	667	1-D 20
CH7X-7729	669	1-D 20
CH7X-7729	679	1-D 21
CH7X-7729	681	1-D 22
CH7X-7729	693	1-D 23
CH7X-7729	695	1-D 23
CH7X-7729	839	1-E 13
CH7X-7729	975	1-F 3
CH7X-7729	997	1-F 5
CH7X-7729	1023	1-F 8
CH7X-7729	1025	1-F 8
CH7X-7729	1027	1-F 8
CH7X-7729	1029	1-F 8
CH7X-7729	1099	1-F 15
CH7X-7958	179	1-B 19
CH7X-7958	181	1-B 20
CH7X-7958	183	1-B 20
CH7Y-0725	1017	1-F 7
CH7Y-3173	1173	1-F 23
CH7Y-5217	667	1-D 20
CH7Y-5217	669	1-D 20
CH7Y-7256	359	1-C 13
CH7Y-7388	1117	1-F 17
CH7Y-8763	579	1-D 11
CH8B-7614	671	1-D 21
CH8C-0572	573	1-D 11
CH8C-0572	575	1-D 11
CH8C-0572	577	1-D 11
CH8C-3051	845	1-E 14
CH8C-3089	795	1-E 9
CH8C-3206	847	1-E 14
CH8C-3348	1221	1-G 4
CH8C-3348	1229	1-G 4
CH8C-5053	183	1-B 20
CH8C-5193	881	1-E 18
CH8C-5200	751	1-E 5
CH8C-5200	755	1-E 5
CH8C-5237	881	1-E 18
CH8C-5607	211	1-B 23
CH8C-5608	211	1-B 23
CH8C-6354	361	1-C 14
CH8C-6416	745	1-E 4
CH8C-6416	747	1-E 4
CH8C-6416	847	1-E 14
CH8C-6416	853	1-E 15
CH8C-6433	581	1-D 12
CH8C-6802	1091	1-F 15
CH8C-6802	1093	1-F 15
CH8C-6870	179	1-B 19
CH8C-6870	181	1-B 20
CH8C-6870	183	1-B 20
CH8C-6872	179	1-B 19
CH8C-6872	181	1-B 20
CH8C-7306	95	1-B 11
CH8C-7323	877	1-E 17
CH8C-8514	359	1-C 13
CH8C-8585	1185	1-F 24
CH8C-8585	1187	1-F 24
CH8C-9101	667	1-D 20
CH8C-9101	669	1-D 20
CH8C-9160	965	1-F 2
CH8C-9660	171	1-B 19
CH8C-9660	275	1-C 5
CH8C-9660	277	1-C 5
CH8C-9660	1173	1-F 23
CH8C-9987	1259	1-G 7
CH8D-3886	667	1-D 20
CH8D-3886	669	1-D 20
CH8D-9558	1257	1-G 7
CH8F-7702	743	1-E 4
CH8F-8513	95	1-B 11
CH8F-8733	783	1-E 8
CH8F-8733	785	1-E 8
CH8F-8733	871	1-E 17
CH8H-2262	671	1-D 21
CH8I-4256	275	1-C 5
CH8I-4256	277	1-C 5
CH8I-4256	1263	1-G 8
CH8K-0589	969	1-F 2
CH8L-2746	95	1-B 11
CH8L-2746	101	1-B 12
CH8L-2746	179	1-B 19
CH8L-2746	181	1-B 20
CH8L-2777	729	1-E 2
CH8L-2777	805	1-E 10
CH8L-2777	807	1-E 10
CH8L-2777	923	1-E 22
CH8L-2777	925	1-E 22
CH8L-2777	927	1-E 22
CH8L-2779	179	1-B 19
CH8L-2779	181	1-B 20
CH8L-2779	183	1-B 20
CH8L-2786	179	1-B 19
CH8L-2786	181	1-B 20
CH8L-2786	183	1-B 20
CH8L-6557	95	1-B 11
CH8L-6557	973	1-F 3
CH8M-2770	95	1-B 11
CH8M-2770	179	1-B 19
CH8M-2770	181	1-B 20
CH8M-2770	197	1-B 21
CH8M-2770	199	1-B 21
CH8M-2770	203	1-B 22
CH8M-2770	205	1-B 22
CH8M-2773	209	1-B 22

Part No.	Page	Grid
CH8M-2773	741	1-E 4
CH8M-4791	175	1-B 19
CH8N-4617	155	1-B 17
CH8N-4617	157	1-B 17
CH8S-0948	197	1-B 21
CH8S-0948	199	1-B 21
CH8S-0948	203	1-B 22
CH8S-0948	205	1-B 22
CH8S-0948	1099	1-F 15
CH8S-7169	403	1-C 18
CH8S-7169	405	1-C 18
CH8T-0255	779	1-E 7
CH8T-0269	945	1-E 24
CH8T-0285	571	1-D 11
CH8T-0318	1091	1-F 15
CH8T-0318	1093	1-F 15
CH8T-0328	1073	1-F 13
CH8T-0334	571	1-D 11
CH8T-0337	265	1-C 4
CH8T-0337	359	1-C 13
CH8T-0389	375	1-C 15
CH8T-0389	381	1-C 16
CH8T-0389	1067	1-F 12
CH8T-0389	1109	1-F 16
CH8T-0644	121	1-B 14
CH8T-0644	123	1-B 14
CH8T-0644	125	1-B 14
CH8T-0785	813	1-E 11
CH8T-0788	179	1-B 19
CH8T-0788	181	1-B 20
CH8T-1482	551	1-D 9
CH8T-1482	553	1-D 9
CH8T-1482	677	1-D 21
CH8T-1482	705	1-D 24
CH8T-1807	107	1-B 12
CH8T-1807	111	1-B 13
CH8T-2392	909	1-E 20
CH8T-2392	915	1-E 21
CH8T-2444	1185	1-F 24
CH8T-2444	1187	1-F 24
CH8T-2658	355	1-C 13
CH8T-2658	361	1-C 14
CH8T-2658	1073	1-F 13
CH8T-2659	275	1-C 5
CH8T-2659	277	1-C 5
CH8T-2659	1173	1-F 23
CH8T-2922	945	1-E 24
CH8T-3016	1085	1-F 14
CH8T-3282	95	1-B 11
CH8T-3282	101	1-B 12
CH8T-3490	153	1-B 17
CH8T-3490	579	1-D 11
CH8T-3490	591	1-D 13
CH8T-3490	625	1-D 16
CH8T-3490	627	1-D 16
CH8T-3490	629	1-D 16
CH8T-3490	693	1-D 23
CH8T-3490	695	1-D 23
CH8T-3490	743	1-E 4
CH8T-3490	815	1-E 11
CH8T-3490	1065	1-F 12
CH8T-3597	579	1-D 11
CH8T-3597	585	1-D 12
CH8T-3597	587	1-D 12
CH8T-3597	591	1-D 13
CH8T-3597	625	1-D 16
CH8T-3597	627	1-D 16
CH8T-3597	815	1-E 11
CH8T-3612	265	1-C 4
CH8T-3612	355	1-C 13
CH8T-3612	381	1-C 16
CH8T-3612	575	1-D 11
CH8T-3612	579	1-D 11
CH8T-3612	581	1-D 12
CH8T-3612	591	1-D 13
CH8T-3612	601	1-D 14
CH8T-3612	603	1-D 14
CH8T-3612	605	1-D 14
CH8T-3612	625	1-D 16
CH8T-3612	627	1-D 16
CH8T-3612	629	1-D 16
CH8T-3612	815	1-E 11
CH8T-3992	1185	1-F 24
CH8T-4001	683	1-D 22
CH8T-4001	973	1-F 3
CH8T-4121	911	1-E 21
CH8T-4122	101	1-B 12
CH8T-4122	117	1-B 13
CH8T-4122	321	1-C 10
CH8T-4122	621	1-D 16
CH8T-4122	631	1-D 17
CH8T-4122	667	1-D 20
CH8T-4122	669	1-D 20
CH8T-4122	973	1-F 3
CH8T-4122	1013	1-F 7
CH8T-4127	207	1-B 22
CH8T-4132	551	1-D 9
CH8T-4132	553	1-D 9
CH8T-4132	667	1-D 20
CH8T-4132	669	1-D 20
CH8T-4205	127	1-B 14
CH8T-4205	197	1-B 21
CH8T-4205	199	1-B 21
CH8T-4205	203	1-B 22
CH8T-4205	205	1-B 22
CH8T-4205	207	1-B 22
CH8T-4205	247	1-C 2
CH8T-4205	249	1-C 2
CH8T-4205	251	1-C 3
CH8T-4205	265	1-C 4
CH8T-4205	269	1-C 4
CH8T-4205	303	1-C 8
CH8T-4205	305	1-C 8
CH8T-4205	321	1-C 10
CH8T-4205	331	1-C 11
CH8T-4205	355	1-C 13
CH8T-4205	357	1-C 13
CH8T-4205	359	1-C 13
CH8T-4205	361	1-C 14
CH8T-4205	377	1-C 15
CH8T-4205	385	1-C 16
CH8T-4205	613	1-D 15
CH8T-4205	1075	1-F 13
CH8T-4205	1119	1-F 17
CH8T-4205	1121	1-F 18
CH8T-4205	1123	1-F 18
CH8T-4205	1259	1-G 7
CH8T-4226	325	1-C 10
CH8T-4226	1121	1-F 18
CH8T-4226	1123	1-F 18
CH8T-4244	199	1-B 21
CH8T-4244	201	1-B 22
CH8T-4244	203	1-B 22
CH8T-4244	205	1-B 22
CH8T-4244	631	1-D 17
CH8T-4244	973	1-F 3
CH8T-4244	975	1-F 3
CH8T-4244	1091	1-F 15
CH8T-4244	1093	1-F 15
CH8T-4778	973	1-F 3
CH8T-4896	107	1-B 12
CH8T-4896	109	1-B 12
CH8T-4896	111	1-B 13
CH8T-4896	131	1-B 15
CH8T-4896	199	1-B 21
CH8T-4896	203	1-B 22
CH8T-4896	877	1-E 17
CH8T-4985	179	1-B 19
CH8T-4985	181	1-B 20
CH8T-4994	115	1-B 13
CH8T-4994	743	1-E 4
CH8T-4994	833	1-E 13
CH8T-4994	835	1-E 13
CH8T-5361	957	1-F 1
CH8T-5400	1191	1-G 1
CH8T-5400	1193	1-G 1
CH8T-5439	589	1-D 12
CH8T-6431	735	1-E 3
CH8T-6693	173	1-B 19
CH8T-6693	1065	1-F 12
CH8T-6762	97	1-B 11
CH8T-6762	103	1-B 12
CH8T-6764	97	1-B 11
CH8T-6764	103	1-B 12
CH8T-6764	107	1-B 12
CH8T-6764	109	1-B 12
CH8T-6765	775	1-E 7
CH8T-6765	777	1-E 7
CH8T-7525	885	1-E 18
CH8T-7525	927	1-E 22
CH8T-7525	929	1-E 22
CH8T-7525	931	1-E 23
CH8T-7525	933	1-E 23
CH8T-7525	935	1-E 23
CH8T-7525	937	1-E 23
CH8T-7876	881	1-E 18
CH8T-7934	1177	1-F 23
CH8T-7963	1153	1-F 21
CH8T-8729	1189	1-F 24
CH8T-8737	329	1-C 10
CH8T-8737	1189	1-F 24
CH8T-8737	1191	1-G 1
CH8T-8737	1193	1-G 1
CH8T-8874	285	1-C 6
CH8T-8874	287	1-C 6
CH8T-8932	743	1-E 4
CH8T-9102	743	1-E 4
CH8T-9501	331	1-C 11
CH8T-9501	581	1-D 12
CH8T-9501	1193	1-G 1
CH8T-9655	209	1-B 22
CH8T-9655	211	1-B 23
CH8T-9655	213	1-B 23
CH8T-9655	377	1-C 15
CH8T-9655	383	1-C 16
CH8U-7381	931	1-E 23
CH8V-9708	197	1-B 21
CH8V-9708	199	1-B 21
CH8V-9708	201	1-B 22
CH8V-9708	205	1-B 22
CH8V-9708	551	1-D 9
CH8V-9708	553	1-D 9
CH8X-6167	735	1-E 3
CH8Y-3795	579	1-D 11
CH8Y-3795	627	1-D 16
CH8Y-5737	1023	1-F 8
CH8Y-5737	1025	1-F 8
CH9B-7233	207	1-B 22
CH9B-7233	359	1-C 13
CH9B-7233	361	1-C 14
CH9B-7233	1071	1-F 13
CH9F-2491	879	1-E 17
CH9F-4446	107	1-B 12
CH9F-4446	109	1-B 12
CH9F-4446	111	1-B 13
CH9G-3695	1089	1-F 14
CH9H-1958	207	1-B 22
CH9H-6673	733	1-E 3
CH9M-1974	171	1-B 19
CH9M-2904	191	1-B 21
CH9M-3835	617	1-D 15
CH9N-0869	209	1-B 22
CH9N-0869	211	1-B 23
CH9N-0869	213	1-B 23
CH9N-0869	215	1-B 23
CH9N-0869	377	1-C 15
CH9N-0869	385	1-C 16
CH9N-1941	167	1-B 18
CH9N-1941	169	1-B 18
CH9N-2061	1191	1-G 1
CH9P-0356	407	1-C 18
CH9P-4809	411	1-C 19
CH9R-0158	1005	1-F 6
CH9R-2613	579	1-D 11
CH9R-2640	579	1-D 11
CH9R-2672	201	1-B 22
CH9R-2672	579	1-D 11
CH9R-2821	627	1-D 16
CH9R-7941	371	1-C 15
CH9R-7980	371	1-C 15
CH9S-1315	969	1-F 2
CH9S-1347	1089	1-F 14
CH9S-4167	175	1-B 19
CH9S-4181	159	1-B 17
CH9S-4181	161	1-B 18
CH9S-7583	195	1-B 21
CH9S-8002	781	1-E 8
CH9S-8002	881	1-E 18
CH9S-8002	883	1-E 18
CH9S-8002	885	1-E 18
CH9S-8002	939	1-E 23
CH9S-8003	671	1-D 21
CH9S-8003	683	1-D 22
CH9S-8003	693	1-D 23
CH9S-8003	695	1-D 23
CH9S-8004	175	1-B 19
CH9S-8004	177	1-B 19
CH9S-8004	881	1-E 18
CH9S-8004	909	1-E 20
CH9S-8004	911	1-E 21
CH9S-8004	915	1-E 21
CH9S-8004	929	1-E 22
CH9S-8004	933	1-E 23
CH9S-8004	935	1-E 23
CH9S-8004	937	1-E 23
CH9S-8004	939	1-E 23
CH9S-8005	911	1-E 21
CH9S-8005	915	1-E 21
CH9S-8005	925	1-E 22
CH9S-8008	883	1-E 18
CH9S-8010	667	1-D 20
CH9S-8010	669	1-D 20
CH9T-1576	791	1-E 9
CH9T-1579	791	1-E 9
CH9T-1582	791	1-E 9
CH9T-1637	791	1-E 9
CH9T-1642	791	1-E 9
CH9T-1643	791	1-E 9
CH9T-1687	791	1-E 9
CH9T-2281	1095	1-F 15
CH9T-4057	761	1-E 6
CH9W-3326	359	1-C 13
CH9W-9625	683	1-D 22
CH9W-9930	115	1-B 13
CH9W-9930	117	1-B 13
CH9X-1046	171	1-B 19
CH9X-1046	1027	1-F 8
CH9X-1046	1029	1-F 8
CH9X-1046	1065	1-F 12
CH9X-1046	1067	1-F 12
CH9X-1046	1177	1-F 23
CH9X-1482	129	1-B 14
CH9X-2038	1181	1-F 24
CH9X-2038	1183	1-F 24
CH9X-2039	1127	1-F 18
CH9X-2040	615	1-D 15
CH9X-2040	1177	1-F 23
CH9X-2040	1179	1-F 23
CH9X-2041	615	1-D 15
CH9X-2042	613	1-D 15

INDEX

Part No.	Page	Grid
CH9X-2042	1059	1-F 11
CH9X-2042	1061	1-F 12
CH9X-2042	1177	1-F 23
CH9X-2043	1185	1-F 24
CH9X-2043	1187	1-F 24
CH9X-2044	207	1-B 22
CH9X-2044	359	1-C 13
CH9X-2044	361	1-C 14
CH9X-2044	1065	1-F 12
CH9X-2044	1067	1-F 12
CH9X-2044	1095	1-F 15
CH9X-2044	1097	1-F 15
CH9X-2044	1127	1-F 18
CH9X-2044	1153	1-F 21
CH9X-2044	1179	1-F 23
CH9X-2045	377	1-C 15
CH9X-2045	385	1-C 16
CH9X-2045	1091	1-F 15
CH9X-2045	1093	1-F 15
CH9X-2045	1097	1-F 15
CH9X-2045	1117	1-F 17
CH9X-2045	1127	1-F 18
CH9X-2045	1177	1-F 23
CH9X-2045	1185	1-F 24
CH9X-2045	1187	1-F 24
CH9X-2046	1095	1-F 15
CH9X-2092	1179	1-F 23
CH9X-2199	667	1-D 20
CH9X-2199	669	1-D 20
CH9X-2304	995	1-F 5
CH9X-2541	741	1-E 4
CH9X-2606	1073	1-F 13
CH9X-2616	1091	1-F 15
CH9X-2616	1093	1-F 15
CH9X-2858	891	1-E 19
CH9X-3994	1059	1-F 11
CH9X-3994	1061	1-F 12
CH9X-6165	1065	1-F 12
CH9X-6165	1127	1-F 18
CH9X-6165	1153	1-F 21
CH9X-7378	1063	1-F 12
CH9X-7378	1099	1-F 15
CH9X-7381	1099	1-F 15
CH9X-7382	1099	1-F 15
CH9X-7680	883	1-E 18
CH9X-7680	885	1-E 18
CH9X-8118	273	1-C 5
CH9X-8118	1263	1-G 8
CH9X-8250	179	1-B 19
CH9X-8250	181	1-B 20
CH9X-8250	1099	1-F 15
CH9X-8267	1023	1-F 8
CH9X-8267	1025	1-F 8
CH9X-8399	965	1-F 2
CH9X-8979	883	1-E 18
CH9X-8979	885	1-E 18
CH9Y-6102	161	1-B 18
WR513654	621	1-D 16
WR514360	1191	1-G 1
WR514360	1193	1-G 1
WR516365	401	1-C 18
WR518357	815	1-E 11
WR518622	1191	1-G 1
WR520610	667	1-D 20
WR520610	669	1-D 20
WR520867	1153	1-F 21
WR522218	95	1-B 11
WR522218	101	1-B 12
WR522218	129	1-B 14
WR522218	131	1-B 15
WR522218	133	1-B 15
WR522218	141	1-B 16
WR522218	143	1-B 16
WR522218	163	1-B 18
WR522218	165	1-B 18
WR522218	179	1-B 19
WR522218	181	1-B 20
WR522218	213	1-B 23
WR522218	267	1-C 4
WR522218	599	1-D 13
WR522218	603	1-D 14
WR522218	605	1-D 14
WR522218	617	1-D 15
WR522218	621	1-D 16
WR522218	631	1-D 17
WR522218	667	1-D 20
WR522218	669	1-D 20
WR522218	679	1-D 21
WR522218	681	1-D 22
WR522218	735	1-E 3
WR522218	741	1-E 4
WR522218	749	1-E 4
WR522218	753	1-E 5
WR522218	757	1-E 5
WR522218	759	1-E 5
WR522218	761	1-E 6
WR522218	775	1-E 7
WR522218	777	1-E 7
WR522218	805	1-E 10
WR522218	807	1-E 10
WR522218	819	1-E 11
WR522218	821	1-E 12
WR522218	823	1-E 12
WR522218	825	1-E 12
WR522218	833	1-E 13
WR522218	839	1-E 13
WR522218	841	1-E 14
WR522218	843	1-E 14
WR522218	849	1-E 14
WR522218	851	1-E 15
WR522218	855	1-E 15
WR522218	857	1-E 15
WR522218	913	1-E 21
WR522218	917	1-E 21
WR522218	919	1-E 21
WR522218	973	1-F 3
WR522218	995	1-F 5
WR522218	997	1-F 5
WR522218	1099	1-F 15
WR561071	177	1-B 19
005-8593	455	1-C 23
005-8593	465	1-C 24
005-8593	473	1-D 1
005-8593	485	1-D 2
008-3178	525	1-D 6
008-3178	531	1-D 7
008-3178	537	1-D 7
031-1119	145	1-B 16
031-1119	147	1-B 16
036-9823	315	1-C 9
036-9823	317	1-C 9
036-9823	319	1-C 9
061-7540	455	1-C 23
061-7540	463	1-C 24
061-7540	473	1-D 1
061-7540	483	1-D 2
090-8865	1061	1-F 12
095-0670	459	1-C 23
095-0670	469	1-C 24
095-0670	479	1-D 1
095-0670	489	1-D 2
095-7930	315	1-C 9
095-7930	317	1-C 9
095-7930	319	1-C 9
096-6166	315	1-C 9
096-6166	317	1-C 9
096-6166	319	1-C 9
096-6166	355	1-C 13
096-6166	357	1-C 13
096-6166	479	1-D 1
096-6166	489	1-D 2
098-8968	355	1-C 13
098-8968	357	1-C 13
1A-0646	505	1-D 4
1A-0646	507	1-D 4
1A-0646	509	1-D 4
1B-6577	497	1-D 3
1B-6577	499	1-D 3
1B-6577	501	1-D 4
1B-6577	503	1-D 4
1C-2251	137	1-B 15
1F-2771	457	1-C 23
1F-2771	467	1-C 24
1F-2771	477	1-D 1
1F-2771	487	1-D 2
1F-2771	493	1-D 3
1F-7567	455	1-C 23
1F-7567	465	1-C 24
1F-7567	475	1-D 1
1F-7567	485	1-D 2
1L-3162	527	1-D 6
1L-3162	533	1-D 7
1L-3162	539	1-D 7
1P-1669	1041	1-F 10
1P-3958	461	1-C 24
1P-3958	471	1-D 1
1P-3958	481	1-D 2
1P-3958	491	1-D 3
1R-1234	707	1-D 24
1R-1235	709	1-D 24
1R-1238	713	1-E 1
1R-1249	707	1-D 24
1R-1250	709	1-D 24
1R-1265	639	1-D 17
1R-1266	641	1-D 18
1R-1267	643	1-D 18
1R-1323	647	1-D 18
1R-1325	649	1-D 18
1R-1360	651	1-D 19
1R-1388	645	1-D 18
1T-1068	421	1-C 20
1T-1068	423	1-C 20
1T-1597	529	1-D 6
1T-1597	535	1-D 7
1T-1597	541	1-D 8
1U-8846	403	1-C 18
1U-8846	421	1-C 20
1U-8846	425	1-C 20
1U-8846	459	1-C 23
1U-8846	469	1-C 24
1U-8846	479	1-D 1
1U-8846	489	1-D 2
1U-8846	493	1-D 3
1U-8846	495	1-D 3
1U-8846	497	1-D 3
1U-8846	499	1-D 3
1U-8846	501	1-D 4
1U-8846	503	1-D 4
101-9640	99	1-B 11
102-8802	827	1-E 12
102-8804	211	1-B 23
102-8804	265	1-C 4
102-8804	353	1-C 13
102-8805	1107	1-F 16
105-5211	753	1-E 5
105-5211	757	1-E 5
105-8034	357	1-C 13
109-6497	497	1-D 3
109-6497	499	1-D 3
109-6497	501	1-D 4
109-6497	503	1-D 4
110-2028	355	1-C 13
110-6393	1231	1-G 5
111-7068	457	1-C 23
111-7068	467	1-C 24
111-7068	477	1-D 1
111-7068	487	1-D 2
112-5282	453	1-C 23
115-1615	1033	1-F 9
115-1615	1039	1-F 9
115-4550	513	1-D 5
116-7471	357	1-C 13
117-0221	93	1-B 11
117-1385	453	1-C 23
117-2311	357	1-C 13
117-8131	611	1-D 15
120-8514	773	1-E 7
120-9048	773	1-E 7
120-9051	773	1-E 7
121-3120	495	1-D 3
123-0380	1091	1-F 15
123-0380	1093	1-F 15
123-0707	355	1-C 13
123-1373	203	1-B 22
124-0492	525	1-D 6
124-0492	531	1-D 7
124-0492	537	1-D 7
124-1479	377	1-C 15
124-1479	759	1-E 5
124-4653	353	1-C 13
124-9536	455	1-C 23
124-9536	463	1-C 24
124-9536	473	1-D 1
124-9536	483	1-D 2
126-7260	457	1-C 23
126-7260	461	1-C 24
126-7260	467	1-C 24
126-7260	471	1-D 1
126-7260	477	1-D 1
126-7260	481	1-D 2
126-7260	487	1-D 2
126-7260	491	1-D 3
127-9545	673	1-D 21
127-9545	675	1-D 21
127-9545	683	1-D 22
127-9561	671	1-D 21
127-9562	667	1-D 20
127-9562	669	1-D 20
127-9564	667	1-D 20
127-9564	669	1-D 20
128-0420	93	1-B 11
129-6457	353	1-C 13
129-6457	355	1-C 13
130-4818	671	1-D 21
130-4818	673	1-D 21
130-4818	675	1-D 21
130-9811	453	1-C 23
130-9811	1039	1-F 9
130-9811	1041	1-F 10
131-3718	459	1-C 23
131-3718	469	1-C 24
131-3718	479	1-D 1
131-3718	489	1-D 2
131-3718	493	1-D 3
131-3718	523	1-D 6
131-3718	529	1-D 6
131-3718	535	1-D 7
131-3718	541	1-D 8
131-3718	1263	1-G 8
132-5789	377	1-C 15
132-5789	379	1-C 15
132-6597	457	1-C 23
132-6597	467	1-C 24
132-6597	477	1-D 1
132-6597	487	1-D 2
132-6598	457	1-C 23
132-6598	467	1-C 24
132-6598	477	1-D 1
132-6598	487	1-D 2
134-3988	377	1-C 15

Part No.	Page	Grid	Part No.	Page	Grid	Part No.	Page	Grid	Part No.	Page	Grid
134-4126	377	1-C 15	136-5477	369	1-C 14	142-9739	201	1-B 22	152-0420	1053	1-F 11
134-4126	383	1-C 16	136-5477	1049	1-F 10	142-9739	283	1-C 6	152-0420	1055	1-F 11
134-5645	505	1-D 4	136-5477	1051	1-F 11	142-9760	197	1-B 21	152-0420	1057	1-F 11
134-5645	507	1-D 4	136-5477	1053	1-F 11	142-9760	205	1-B 22	152-0422	1189	1-F 24
134-5645	509	1-D 4	136-5477	1055	1-F 11	142-9760	281	1-C 6	152-0424	1049	1-F 10
134-8360	427	1-C 20	136-5477	1057	1-F 11	142-9826	113	1-B 13	152-0424	1051	1-F 11
134-8360	429	1-C 20	136-5477	1133	1-F 19	142-9831	331	1-C 11	152-0424	1055	1-F 11
134-8360	431	1-C 21	136-5477	1135	1-F 19	142-9839	199	1-B 21	152-0424	1057	1-F 11
134-8360	433	1-C 21	136-5477	1141	1-F 20	142-9839	201	1-B 22	152-0424	1181	1-F 24
134-8360	437	1-C 21	136-5477	1143	1-F 20	145-0846	357	1-C 13	152-0427	1027	1-F 8
134-8360	441	1-C 22	136-5477	1149	1-F 20	145-0847	357	1-C 13	152-0427	1039	1-F 9
134-8360	443	1-C 22	136-5477	1151	1-F 21	146-3504	315	1-C 9	152-0427	1041	1-F 10
134-8360	445	1-C 22	136-5509	251	1-C 3	146-3504	317	1-C 9	152-0428	1023	1-F 8
134-8360	447	1-C 22	136-5509	255	1-C 3	146-3504	319	1-C 9	152-0428	1031	1-F 9
134-8360	451	1-C 23	136-5509	257	1-C 3	148-1925	453	1-C 23	152-0428	1033	1-F 9
134-8360	525	1-D 6	136-5511	353	1-C 13	148-8316	527	1-D 6	152-0428	1035	1-F 9
134-8360	531	1-D 7	136-5530	353	1-C 13	148-8316	533	1-D 7	152-0431	1177	1-F 23
134-8360	537	1-D 7	136-5535	391	1-C 17	148-8316	539	1-D 7	152-0433	1049	1-F 10
134-8361	427	1-C 20	136-5536	209	1-B 22	148-8385	527	1-D 6	152-0433	1051	1-F 11
134-8361	429	1-C 20	136-5566	171	1-B 19	148-8385	533	1-D 7	152-0433	1053	1-F 11
134-8361	431	1-C 21	136-5597	251	1-C 3	148-8385	539	1-D 7	152-0433	1055	1-F 11
134-8361	433	1-C 21	136-5597	255	1-C 3	148-8395	423	1-C 20	152-0433	1057	1-F 11
134-8361	437	1-C 21	136-5597	257	1-C 3	150-5146	97	1-B 11	152-0433	1153	1-F 21
134-8361	441	1-C 22	136-5598	255	1-C 3	150-5146	103	1-B 12	152-0434	1065	1-F 12
134-8361	443	1-C 22	136-5598	257	1-C 3	151-4059	715	1-E 1	152-0434	1127	1-F 18
134-8361	445	1-C 22	136-5598	261	1-C 4	151-8541	1185	1-F 24	152-0434	1129	1-F 18
134-8361	447	1-C 22	136-5600	113	1-B 13	151-8541	1187	1-F 24	152-0434	1131	1-F 19
134-8361	451	1-C 23	136-5600	207	1-B 22	151-8545	1185	1-F 24	152-0434	1133	1-F 19
134-8361	525	1-D 6	136-5600	1263	1-G 8	151-8545	1187	1-F 24	152-0434	1135	1-F 19
134-8361	531	1-D 7	136-5612	197	1-B 21	151-8559	1059	1-F 11	152-0434	1137	1-F 19
134-8361	537	1-D 7	136-5612	205	1-B 22	151-8559	1061	1-F 12	152-0434	1139	1-F 19
135-4483	353	1-C 13	136-5631	199	1-B 21	151-9961	1059	1-F 11	152-0434	1141	1-F 20
136-1953	1031	1-F 9	136-5631	201	1-B 22	151-9961	1061	1-F 12	152-0434	1143	1-F 20
136-5218	171	1-B 19	136-5654	197	1-B 21	151-9979	1185	1-F 24	152-0434	1145	1-F 20
136-5221	171	1-B 19	136-5654	199	1-B 21	151-9979	1187	1-F 24	152-0434	1147	1-F 20
136-5224	171	1-B 19	136-5654	201	1-B 22	151-9982	1185	1-F 24	152-0434	1149	1-F 20
136-5225	197	1-B 21	136-5654	205	1-B 22	151-9983	1091	1-F 15	152-0434	1151	1-F 21
136-5225	199	1-B 21	136-5654	207	1-B 22	151-9984	1185	1-F 24	152-0438	1049	1-F 10
136-5225	201	1-B 22	136-5655	207	1-B 22	151-9986	1023	1-F 8	152-0438	1051	1-F 11
136-5225	205	1-B 22	136-5657	199	1-B 21	151-9986	1049	1-F 10	152-0438	1053	1-F 11
136-5261	303	1-C 8	136-5657	201	1-B 22	151-9986	1053	1-F 11	152-0438	1055	1-F 11
136-5261	305	1-C 8	136-5658	197	1-B 21	151-9991	1187	1-F 24	152-0438	1057	1-F 11
136-5270	197	1-B 21	136-5659	57	1-B 7	151-9994	1059	1-F 11	152-0438	1073	1-F 13
136-5270	199	1-B 21	136-5659	59	1-B 7	151-9994	1185	1-F 24	152-0441	1121	1-F 18
136-5270	201	1-B 22	136-5659	205	1-B 22	151-9995	1061	1-F 12	152-0441	1123	1-F 18
136-5270	205	1-B 22	136-5659	1055	1-F 11	151-9995	1187	1-F 24	152-0443	903	1-E 20
136-5288	255	1-C 3	136-5662	199	1-B 21	152-0003	1053	1-F 11	152-0443	1079	1-F 13
136-5288	257	1-C 3	136-5663	61	1-B 8	152-0003	1055	1-F 11	152-0443	1129	1-F 18
136-5288	261	1-C 4	136-5663	63	1-B 8	152-0003	1057	1-F 11	152-0443	1131	1-F 19
136-5289	255	1-C 3	136-5663	201	1-B 22	152-0003	1059	1-F 11	152-0443	1133	1-F 19
136-5289	257	1-C 3	136-5663	203	1-B 22	152-0004	1049	1-F 10	152-0443	1135	1-F 19
136-5289	261	1-C 4	136-5663	1057	1-F 11	152-0004	1051	1-F 11	152-0444	1049	1-F 10
136-5330	1045	1-F 10	136-5665	73	1-B 9	152-0004	1061	1-F 12	152-0444	1051	1-F 11
136-5340	197	1-B 21	136-5665	265	1-C 4	152-0005	359	1-C 13	152-0444	1123	1-F 18
136-5340	199	1-B 21	136-5668	73	1-B 9	152-0005	361	1-C 14	152-0445	977	1-F 3
136-5340	201	1-B 22	136-5668	373	1-C 15	152-0005	1049	1-F 10	152-0445	979	1-F 3
136-5340	205	1-B 22	136-5668	375	1-C 15	152-0005	1051	1-F 11	152-0445	981	1-F 4
136-5355	801	1-E 10	136-5668	377	1-C 15	152-0417	1053	1-F 11	152-0445	983	1-F 4
136-5355	1077	1-F 13	136-5669	75	1-B 9	152-0417	1055	1-F 11	152-0445	985	1-F 4
136-5378	211	1-B 23	136-5669	379	1-C 15	152-0417	1057	1-F 11	152-0445	987	1-F 4
136-5378	977	1-F 3	136-5669	381	1-C 16	152-0417	1121	1-F 18	152-0445	1075	1-F 13
136-5378	979	1-F 3	136-5669	383	1-C 16	152-0418	1049	1-F 10	152-0445	1131	1-F 19
136-5378	981	1-F 4	136-5669	385	1-C 16	152-0418	1051	1-F 11	152-0445	1135	1-F 19
136-5378	983	1-F 4	136-5670	209	1-B 22	152-0418	1053	1-F 11	152-0445	1139	1-F 19
136-5378	985	1-F 4	136-5670	801	1-E 10	152-0418	1055	1-F 11	152-0445	1143	1-F 20
136-5378	987	1-F 4	136-5670	905	1-E 20	152-0418	1057	1-F 11	152-0445	1147	1-F 20
136-5380	375	1-C 15	136-5670	907	1-E 20	152-0418	1097	1-F 15	152-0445	1151	1-F 21
136-5380	381	1-C 16	141-0888	773	1-E 7	152-0419	1049	1-F 10	152-0446	221	1-B 24
136-5381	375	1-C 15	142-9677	265	1-C 4	152-0419	1051	1-F 11	152-0446	1009	1-F 6
136-5388	303	1-C 8	142-9717	205	1-B 22	152-0419	1055	1-F 11	152-0447	171	1-B 19
136-5404	305	1-C 8	142-9738	197	1-B 21	152-0419	1057	1-F 11	152-0447	1049	1-F 10
136-5429	75	1-B 9	142-9738	199	1-B 21	152-0419	1171	1-F 23	152-0447	1051	1-F 11
136-5429	269	1-C 4	142-9738	201	1-B 22	152-0420	353	1-C 13	152-0447	1053	1-F 11
136-5441	265	1-C 4	142-9738	205	1-B 22	152-0420	355	1-C 13	152-0447	1055	1-F 11
136-5476	265	1-C 4	142-9739	199	1-B 21	152-0420	357	1-C 13	152-0447	1057	1-F 11

INDEX

Part No.	Page	Grid	Part No.	Page	Grid	Part No.	Page	Grid	Part No.	Page	Grid
152-0448	803	1-E 10	156-6075	645	1-D 18	162-4091	269	1-C 4	163-0383	407	1-C 18
152-0448	1081	1-F 14	156-6077	639	1-D 17	162-4092	265	1-C 4	163-0384	85	1-B 10
152-0448	1145	1-F 20	156-6079	641	1-D 18	162-4092	269	1-C 4	163-0384	87	1-B 10
152-0448	1147	1-F 20	156-6082	643	1-D 18	162-4095	1183	1-F 24	163-0384	89	1-B 10
152-0448	1149	1-F 20	156-6084	671	1-D 21	162-4096	387	1-C 16	163-0384	91	1-B 11
152-0448	1151	1-F 21	156-8343	693	1-D 23	162-4096	1055	1-F 11	163-0384	409	1-C 18
152-5242	413	1-C 19	156-8343	695	1-D 23	162-4096	1057	1-F 11	163-0386	73	1-B 9
152-5242	415	1-C 19	158-2339	831	1-E 13	162-4097	351	1-C 13	163-0386	745	1-E 4
152-5242	417	1-C 19	158-2339	861	1-E 16	162-4097	1055	1-F 11	163-0400	1009	1-F 6
152-5242	419	1-C 19	158-2342	73	1-B 9	162-4097	1057	1-F 11	163-0402	241	1-C 2
152-5242	511	1-D 5	158-2342	75	1-B 9	162-4099	331	1-C 11	163-0403	243	1-C 2
153-9300	355	1-C 13	158-2342	831	1-E 13	162-4101	271	1-C 5	163-0405	409	1-C 18
154-8079	353	1-C 13	158-2349	815	1-E 11	162-4101	273	1-C 5	163-0412	407	1-C 18
154-8263	671	1-D 21	158-2349	831	1-E 13	162-4101	1049	1-F 10	163-0414	409	1-C 18
154-8264	671	1-D 21	158-2356	831	1-E 13	162-4101	1051	1-F 11	163-0414	411	1-C 19
154-8264	1263	1-G 8	158-2356	843	1-E 14	162-4102	391	1-C 17	163-0415	411	1-C 19
155-0014	269	1-C 4	158-2356	845	1-E 14	162-4103	1193	1-G 1	163-0425	407	1-C 18
155-0020	267	1-C 4	158-2363	977	1-F 3	162-4105	1065	1-F 12	163-0425	409	1-C 18
155-0027	265	1-C 4	158-2363	979	1-F 3	162-4111	1123	1-F 18	163-0592	455	1-C 23
155-0029	265	1-C 4	158-2363	981	1-F 4	162-4112	547	1-D 8	163-0592	463	1-C 24
155-0038	207	1-B 22	158-2363	983	1-F 4	162-4112	611	1-D 15	163-0592	473	1-D 1
155-0042	275	1-C 5	158-2363	985	1-F 4	162-6654	1121	1-F 18	163-0592	483	1-D 2
155-0043	277	1-C 5	158-2363	987	1-F 4	162-6654	1123	1-F 18	163-0678	673	1-D 21
155-2939	671	1-D 21	158-2363	993	1-F 5	162-6655	1121	1-F 18	163-0678	675	1-D 21
155-4426	543	1-D 8	158-2363	995	1-F 5	162-6687	1097	1-F 15	163-0678	677	1-D 21
155-4426	545	1-D 8	158-2393	831	1-E 13	162-6688	1097	1-F 15	163-1009	697	1-D 23
155-9571	427	1-C 20	158-2393	859	1-E 15	162-6689	1097	1-F 15	163-1009	701	1-D 24
155-9571	511	1-D 5	158-2397	831	1-E 13	162-6690	1097	1-F 15	164-2108	543	1-D 8
155-9572	429	1-C 20	158-2397	871	1-E 17	162-6691	1095	1-F 15	164-2108	545	1-D 8
155-9572	431	1-C 21	158-2404	659	1-D 19	162-6692	1097	1-F 15	164-3949	529	1-D 6
155-9572	511	1-D 5	158-2404	661	1-D 20	162-6693	1121	1-F 18	164-3949	535	1-D 7
155-9575	433	1-C 21	158-2404	783	1-E 8	162-6693	1123	1-F 18	164-3949	541	1-D 8
155-9575	511	1-D 5	158-5925	75	1-B 9	162-6696	265	1-C 4	164-3951	529	1-D 6
155-9576	435	1-C 21	158-5925	613	1-D 15	162-6697	265	1-C 4	164-3951	535	1-D 7
155-9576	437	1-C 21	158-5934	599	1-D 13	162-6698	265	1-C 4	164-3951	541	1-D 8
155-9576	511	1-D 5	158-5934	601	1-D 14	162-6699	265	1-C 4	164-4180	423	1-C 20
155-9579	421	1-C 20	158-5935	599	1-D 13	162-6734	1095	1-F 15	164-5567	423	1-C 20
155-9579	423	1-C 20	158-5935	601	1-D 14	162-6737	1065	1-F 12	164-5619	423	1-C 20
155-9579	425	1-C 20	158-5950	597	1-D 13	162-6738	1065	1-F 12	164-7013	1091	1-F 15
155-9579	511	1-D 5	158-5950	601	1-D 14	162-6738	1263	1-G 8	164-7013	1093	1-F 15
155-9580	453	1-C 23	158-5952	597	1-D 13	162-6751	1177	1-F 23	164-7014	1091	1-F 15
155-9580	511	1-D 5	158-5952	601	1-D 14	162-6752	1179	1-F 23	164-7014	1093	1-F 15
156-1313	73	1-B 9	158-5953	599	1-D 13	162-6757	1153	1-F 21	164-7017	1059	1-F 11
156-1313	597	1-D 13	158-5953	601	1-D 14	162-6758	1153	1-F 21	164-7017	1061	1-F 12
156-1313	599	1-D 13	158-5960	581	1-D 12	162-6759	1153	1-F 21	164-7023	1095	1-F 15
156-1327	547	1-D 8	158-5960	597	1-D 13	162-9766	751	1-E 5	164-7040	1075	1-F 13
156-1327	621	1-D 16	158-5961	581	1-D 12	162-9766	755	1-E 5	164-7041	1089	1-F 14
156-4881	659	1-D 19	158-5962	581	1-D 12	162-9804	867	1-E 16	164-7042	1065	1-F 12
156-4881	661	1-D 20	159-1236	401	1-C 18	162-9804	873	1-E 17	164-7044	1067	1-F 12
156-4881	701	1-D 24	159-1236	403	1-C 18	162-9805	727	1-E 2	164-7054	1091	1-F 15
156-4882	673	1-D 21	160-6789	529	1-D 6	162-9805	729	1-E 2	164-7062	1153	1-F 21
156-4882	701	1-D 24	160-6789	535	1-D 7	162-9805	865	1-E 16	164-7067	1091	1-F 15
156-4882	703	1-D 24	160-6789	541	1-D 8	162-9805	895	1-E 19	164-7067	1093	1-F 15
156-4883	675	1-D 21	161-1817	693	1-D 23	162-9805	899	1-E 19	164-7068	1059	1-F 11
156-4883	701	1-D 24	161-1817	695	1-D 23	162-9805	901	1-E 20	164-7068	1061	1-F 12
156-4883	703	1-D 24	161-8222	421	1-C 20	162-9816	807	1-E 10	164-7068	1091	1-F 15
156-4884	673	1-D 21	161-8222	423	1-C 20	162-9816	913	1-E 21	164-7069	1177	1-F 23
156-4884	693	1-D 23	161-8739	525	1-D 6	162-9816	917	1-E 21	165-0260	529	1-D 6
156-4885	675	1-D 21	161-8739	531	1-D 7	162-9816	919	1-E 21	165-0260	535	1-D 7
156-4885	695	1-D 23	161-8739	537	1-D 7	162-9816	923	1-E 22	165-0260	541	1-D 8
156-4891	689	1-D 22	161-8848	525	1-D 6	162-9817	911	1-E 21	165-0390	453	1-C 23
156-4893	65	1-B 8	161-8848	531	1-D 7	162-9817	915	1-E 21	165-0400	443	1-C 22
156-4893	67	1-B 8	161-9173	75	1-B 9	162-9817	925	1-E 22	165-0420	435	1-C 21
156-4893	69	1-B 8	161-9173	601	1-D 14	162-9818	911	1-E 21	165-0420	449	1-C 22
156-4893	71	1-B 9	161-9173	603	1-D 14	162-9818	915	1-E 21	165-5973	247	1-C 2
156-4893	691	1-D 23	161-9174	73	1-B 9	162-9818	927	1-E 22	165-5973	249	1-C 2
156-5581	49	1-B 6	161-9174	573	1-D 11	162-9822	925	1-E 22	165-5973	251	1-C 3
156-5581	65	1-B 8	161-9177	75	1-B 9	163-0267	697	1-D 23	165-7901	869	1-E 16
156-5582	51	1-B 7	161-9177	575	1-D 11	163-0267	699	1-D 23	165-7901	875	1-E 17
156-5582	67	1-B 8	162-0177	423	1-C 20	163-0268	697	1-D 23	165-8537	923	1-E 22
156-5583	53	1-B 7	162-0177	529	1-D 6	163-0268	699	1-D 23	165-8537	925	1-E 22
156-5583	69	1-B 8	162-0177	535	1-D 7	163-0383	77	1-B 9	165-8537	927	1-E 22
156-5584	55	1-B 7	162-0177	541	1-D 8	163-0383	79	1-B 9	166-1211	367	1-C 14
156-5584	71	1-B 9	162-0288	697	1-D 23	163-0383	81	1-B 10	166-1211	1129	1-F 18
156-5863	1039	1-F 9	162-4091	265	1-C 4	163-0383	83	1-B 10	166-1211	1131	1-F 19

Part No.	Page	Grid	Part No.	Page	Grid	Part No.	Page	Grid	Part No.	Page	Grid
166-1211	1137	1-F 19	168-2311	1039	1-F 9	171-1229	211	1-B 23	172-5343	1099	1-F 15
166-1211	1139	1-F 19	168-2311	1041	1-F 10	171-1229	1263	1-G 8	172-5344	85	1-B 10
166-1211	1145	1-F 20	168-2313	1033	1-F 9	171-1576	1045	1-F 10	172-5344	87	1-B 10
166-1211	1147	1-F 20	168-2313	1039	1-F 9	171-7234	551	1-D 9	172-5344	89	1-B 10
166-3754	1067	1-F 12	168-2313	1263	1-G 8	171-7234	553	1-D 9	172-5344	91	1-B 11
166-3755	1067	1-F 12	168-2315	1033	1-F 9	171-9687	265	1-C 4	172-5344	135	1-B 15
166-4553	1089	1-F 14	168-2315	1039	1-F 9	171-9687	269	1-C 4	172-5345	77	1-B 9
166-4555	1067	1-F 12	168-2316	1033	1-F 9	171-9687	1263	1-G 8	172-5345	79	1-B 9
166-4556	1023	1-F 8	168-2316	1039	1-F 9	171-9688	265	1-C 4	172-5345	81	1-B 10
166-4556	1025	1-F 8	168-2318	1031	1-F 9	171-9688	269	1-C 4	172-5345	83	1-B 10
166-4556	1027	1-F 8	168-2322	1041	1-F 10	171-9688	1263	1-G 8	172-5345	133	1-B 15
166-4556	1029	1-F 8	168-2324	1031	1-F 9	171-9773	1261	1-G 8	172-5361	49	1-B 6
166-4556	1095	1-F 15	168-2326	1031	1-F 9	171-9774	1261	1-G 8	172-5361	77	1-B 9
166-4558	1059	1-F 11	168-2327	1035	1-F 9	172-3441	525	1-D 6	172-5362	51	1-B 7
166-4558	1061	1-F 12	168-2334	1089	1-F 14	172-3441	531	1-D 7	172-5362	81	1-B 10
166-4568	1185	1-F 24	168-4558	525	1-D 6	172-3441	537	1-D 7	172-5363	53	1-B 7
166-4570	1185	1-F 24	168-4558	531	1-D 7	172-4155	699	1-D 23	172-5363	85	1-B 10
166-4586	1023	1-F 8	168-4558	537	1-D 7	172-4516	831	1-E 13	172-5364	55	1-B 7
166-4586	1025	1-F 8	168-6580	275	1-C 5	172-4516	837	1-E 13	172-5364	89	1-B 10
166-4586	1071	1-F 13	168-6581	277	1-C 5	172-4516	839	1-E 13	172-6841	287	1-C 6
166-4587	1027	1-F 8	169-0027	977	1-F 3	172-4517	663	1-D 20	172-6841	361	1-C 14
166-4590	905	1-E 20	169-0028	979	1-F 3	172-4517	665	1-D 20	172-6842	1173	1-F 23
166-4590	1083	1-F 14	169-6323	1189	1-F 24	172-4517	785	1-E 8	172-6844	1117	1-F 17
166-4590	1137	1-F 19	169-6323	1191	1-G 1	172-4518	847	1-E 14	172-6845	1117	1-F 17
166-4590	1139	1-F 19	169-6328	1185	1-F 24	172-4518	873	1-E 17	172-6851	1075	1-F 13
166-4590	1141	1-F 20	169-6328	1187	1-F 24	172-4519	853	1-E 15	172-6852	1075	1-F 13
166-4590	1143	1-F 20	169-6337	1095	1-F 15	172-4519	875	1-E 17	172-6853	1075	1-F 13
166-4590	1145	1-F 20	169-6342	1177	1-F 23	172-5333	85	1-B 10	172-6857	733	1-E 3
166-4590	1147	1-F 20	169-6343	1177	1-F 23	172-5333	87	1-B 10	172-6857	1049	1-F 10
166-4590	1149	1-F 20	169-6344	1177	1-F 23	172-5333	89	1-B 10	172-6857	1051	1-F 11
166-4590	1151	1-F 21	169-6345	1179	1-F 23	172-5333	91	1-B 11	172-6858	1075	1-F 13
166-4592	1027	1-F 8	169-6346	367	1-C 14	172-5333	117	1-B 13	172-6863	1075	1-F 13
166-4592	1051	1-F 11	169-6346	369	1-C 14	172-5334	77	1-B 9	172-6864	1075	1-F 13
166-4592	1055	1-F 11	169-6346	1087	1-F 14	172-5334	79	1-B 9	172-6865	1075	1-F 13
166-4592	1057	1-F 11	169-6347	1087	1-F 14	172-5334	81	1-B 10	172-6869	1089	1-F 14
166-4595	1095	1-F 15	169-6347	1089	1-F 14	172-5334	83	1-B 10	172-6945	77	1-B 9
166-4603	1023	1-F 8	169-6351	1153	1-F 21	172-5334	115	1-B 13	172-6945	79	1-B 9
166-4603	1025	1-F 8	169-6362	1079	1-F 13	172-5335	85	1-B 10	172-6946	81	1-B 10
166-4603	1027	1-F 8	169-6362	1083	1-F 14	172-5335	87	1-B 10	172-6946	83	1-B 10
166-4603	1029	1-F 8	169-6367	353	1-C 13	172-5335	89	1-B 10	172-7966	513	1-D 5
166-4608	1065	1-F 12	169-6370	353	1-C 13	172-5335	91	1-B 11	172-7968	513	1-D 5
166-4616	247	1-C 2	169-6373	1095	1-F 15	172-5335	169	1-B 18	172-8035	347	1-C 12
166-4616	249	1-C 2	169-6380	285	1-C 6	172-5336	77	1-B 9	172-8886	73	1-B 9
166-4616	251	1-C 3	169-6380	357	1-C 13	172-5336	79	1-B 9	172-8886	1203	1-G 2
166-4617	1095	1-F 15	169-6383	1177	1-F 23	172-5336	81	1-B 10	173-2743	621	1-D 16
166-4623	75	1-B 9	169-6384	1081	1-F 14	172-5336	83	1-B 10	173-2744	621	1-D 16
166-4623	779	1-E 7	169-6385	1067	1-F 12	172-5336	167	1-B 18	173-4060	1261	1-G 8
166-7774	551	1-D 9	169-6386	1067	1-F 12	172-5337	85	1-B 10	173-5392	427	1-C 20
166-7774	553	1-D 9	169-6390	1065	1-F 12	172-5337	87	1-B 10	173-5392	429	1-C 20
166-7775	551	1-D 9	169-6391	1075	1-F 13	172-5337	89	1-B 10	173-5392	431	1-C 21
166-7775	553	1-D 9	169-6399	1185	1-F 24	172-5337	91	1-B 11	173-5392	433	1-C 21
166-7776	551	1-D 9	169-6399	1187	1-F 24	172-5337	151	1-B 17	173-5392	435	1-C 21
166-7776	553	1-D 9	169-8222	321	1-C 10	172-5338	77	1-B 9	173-5392	437	1-C 21
167-1258	1193	1-G 1	169-8223	273	1-C 5	172-5338	79	1-B 9	173-5392	441	1-C 22
167-9524	543	1-D 8	169-8225	387	1-C 16	172-5338	81	1-B 10	173-5392	443	1-C 22
167-9524	545	1-D 8	169-8227	1075	1-F 13	172-5338	83	1-B 10	173-5392	445	1-C 22
168-1945	393	1-C 17	169-8227	1263	1-G 8	172-5338	153	1-B 17	173-5392	447	1-C 22
168-1946	371	1-C 15	169-8228	367	1-C 14	172-5341	85	1-B 10	173-5392	449	1-C 22
168-1946	1049	1-F 10	169-8228	369	1-C 14	172-5341	87	1-B 10	173-5392	451	1-C 23
168-1946	1051	1-F 11	169-8229	351	1-C 13	172-5341	89	1-B 10	173-5392	525	1-D 6
168-1951	1045	1-F 10	169-8229	371	1-C 15	172-5341	91	1-B 11	173-5392	531	1-D 7
168-1951	1049	1-F 10	169-8230	391	1-C 17	172-5341	161	1-B 18	173-5392	537	1-D 7
168-1951	1051	1-F 11	169-8230	393	1-C 17	172-5342	77	1-B 9	173-6501	389	1-C 16
168-1951	1053	1-F 11	169-8231	357	1-C 13	172-5342	79	1-B 9	173-6501	1051	1-F 11
168-1951	1055	1-F 11	169-8231	361	1-C 14	172-5342	81	1-B 10	173-6501	1055	1-F 11
168-1951	1057	1-F 11	170-1198	353	1-C 13	172-5342	83	1-B 10	173-6501	1057	1-F 11
168-1952	1111	1-F 17	170-2204	353	1-C 13	172-5342	159	1-B 17	173-6505	347	1-C 12
168-1970	1113	1-F 17	170-2204	359	1-C 13	172-5343	77	1-B 9	173-6506	1173	1-F 23
168-2284	1121	1-F 18	170-5739	1115	1-F 17	172-5343	79	1-B 9	173-6507	1117	1-F 17
168-2284	1123	1-F 18	170-5765	621	1-D 16	172-5343	81	1-B 10	173-7707	357	1-C 13
168-2291	327	1-C 10	170-7252	365	1-C 14	172-5343	83	1-B 10	173-7708	359	1-C 13
168-2305	1097	1-F 15	170-7253	1117	1-F 17	172-5343	85	1-B 10	173-7708	363	1-C 14
168-2311	1031	1-F 9	170-7255	1173	1-F 23	172-5343	87	1-B 10	173-8307	635	1-D 17
168-2311	1033	1-F 9	170-7290	493	1-D 3	172-5343	89	1-B 10	173-8307	637	1-D 17
168-2311	1035	1-F 9	170-7290	523	1-D 6	172-5343	91	1-B 11	173-8818	1065	1-F 12

INDEX

Part No.	Page	Grid
174-3978	1031	1-F 9
174-3979	1031	1-F 9
174-3980	1033	1-F 9
174-3981	1031	1-F 9
174-4874	497	1-D 3
174-4874	499	1-D 3
174-4874	501	1-D 4
174-4874	503	1-D 4
174-4875	501	1-D 4
174-4875	503	1-D 4
174-5770	1023	1-F 8
174-5770	1025	1-F 8
174-5770	1027	1-F 8
174-5770	1029	1-F 8
174-5774	1177	1-F 23
174-5788	1177	1-F 23
174-5790	1065	1-F 12
174-7449	513	1-D 5
174-7872	1193	1-G 1
174-8822	761	1-E 6
174-9381	457	1-C 23
174-9381	467	1-C 24
174-9381	477	1-D 1
174-9381	487	1-D 2
174-9383	461	1-C 24
174-9383	471	1-D 1
174-9383	481	1-D 2
174-9383	491	1-D 3
174-9407	457	1-C 23
174-9407	467	1-C 24
174-9407	477	1-D 1
174-9407	487	1-D 2
174-9410	457	1-C 23
174-9410	467	1-C 24
174-9410	477	1-D 1
174-9410	487	1-D 2
175-0198	1193	1-G 1
175-3097	497	1-D 3
175-3097	499	1-D 3
175-3097	501	1-D 4
175-3097	503	1-D 4
175-3097	505	1-D 4
175-3097	507	1-D 4
175-3097	509	1-D 4
175-7513	671	1-D 21
176-0373	581	1-D 12
176-0374	581	1-D 12
176-0379	259	1-C 3
176-0380	259	1-C 3
176-0997	573	1-D 11
176-0997	575	1-D 11
176-0998	573	1-D 11
176-0998	575	1-D 11
176-0999	573	1-D 11
176-0999	575	1-D 11
176-1001	573	1-D 11
176-1001	575	1-D 11
176-1002	573	1-D 11
176-1002	575	1-D 11
176-1377	457	1-C 23
176-1377	461	1-C 24
176-1377	467	1-C 24
176-1377	471	1-D 1
176-1377	477	1-D 1
176-1377	481	1-D 2
176-1377	487	1-D 2
176-1377	491	1-D 3
176-2966	667	1-D 20
176-2968	669	1-D 20
177-0381	355	1-C 13
177-0381	359	1-C 13
177-0385	355	1-C 13
177-0385	359	1-C 13
177-0661	957	1-F 1
177-0661	959	1-F 1
177-4522	647	1-D 18
177-4523	649	1-D 18
177-4588	565	1-D 10
177-4589	685	1-D 22
177-5233	439	1-C 21
177-5233	511	1-D 5
177-5234	493	1-D 3
177-5234	511	1-D 5
177-5236	427	1-C 20
177-5236	429	1-C 20
177-5236	431	1-C 21
177-5236	433	1-C 21
177-5236	441	1-C 22
177-5236	443	1-C 22
177-5236	445	1-C 22
177-5236	447	1-C 22
177-5241	427	1-C 20
177-5241	429	1-C 20
177-5241	431	1-C 21
177-5241	433	1-C 21
177-5241	435	1-C 21
177-5241	437	1-C 21
177-5241	441	1-C 22
177-5241	443	1-C 22
177-5241	445	1-C 22
177-5241	447	1-C 22
177-5241	449	1-C 22
177-5241	451	1-C 23
177-5241	525	1-D 6
177-5241	531	1-D 7
177-5241	537	1-D 7
177-5243	427	1-C 20
177-5243	429	1-C 20
177-5243	431	1-C 21
177-5243	433	1-C 21
177-5243	437	1-C 21
177-5243	441	1-C 22
177-5243	443	1-C 22
177-5243	445	1-C 22
177-5243	447	1-C 22
177-5243	451	1-C 23
177-5243	525	1-D 6
177-5243	531	1-D 7
177-5243	537	1-D 7
177-5246	427	1-C 20
177-5246	429	1-C 20
177-5246	431	1-C 21
177-5246	433	1-C 21
177-5246	435	1-C 21
177-5246	437	1-C 21
177-5246	441	1-C 22
177-5246	443	1-C 22
177-5246	445	1-C 22
177-5246	447	1-C 22
177-5246	449	1-C 22
177-5246	451	1-C 23
177-5246	525	1-D 6
177-5246	531	1-D 7
177-5246	537	1-D 7
177-5248	427	1-C 20
177-5248	433	1-C 21
177-5248	441	1-C 22
177-5248	443	1-C 22
177-5249	427	1-C 20
177-5249	429	1-C 20
177-5249	431	1-C 21
177-5249	433	1-C 21
177-5249	435	1-C 21
177-5249	437	1-C 21
177-5249	441	1-C 22
177-5249	443	1-C 22
177-5249	445	1-C 22
177-5249	447	1-C 22
177-5249	449	1-C 22
177-5249	451	1-C 23
177-5249	1263	1-G 8
177-5250	427	1-C 20
177-5250	433	1-C 21
177-5250	441	1-C 22
177-5250	443	1-C 22
177-5252	427	1-C 20
177-5252	443	1-C 22
177-5256	427	1-C 20
177-5256	429	1-C 20
177-5256	443	1-C 22
177-5256	445	1-C 22
177-5257	427	1-C 20
177-5257	429	1-C 20
177-5257	433	1-C 21
177-5257	441	1-C 22
177-5257	443	1-C 22
177-5257	445	1-C 22
177-5258	427	1-C 20
177-5258	429	1-C 20
177-5258	431	1-C 21
177-5258	433	1-C 21
177-5258	435	1-C 21
177-5258	437	1-C 21
177-5258	441	1-C 22
177-5258	443	1-C 22
177-5258	445	1-C 22
177-5258	447	1-C 22
177-5258	449	1-C 22
177-5258	451	1-C 23
177-5260	427	1-C 20
177-5260	443	1-C 22
177-5263	429	1-C 20
177-5263	445	1-C 22
177-5265	429	1-C 20
177-5265	445	1-C 22
177-5267	429	1-C 20
177-5267	435	1-C 21
177-5267	445	1-C 22
177-5267	449	1-C 22
177-5269	433	1-C 21
177-5269	441	1-C 22
177-5270	433	1-C 21
177-5270	441	1-C 22
177-6738	435	1-C 21
177-6738	437	1-C 21
177-6738	449	1-C 22
177-6738	451	1-C 23
177-6739	435	1-C 21
177-6739	449	1-C 22
177-6740	435	1-C 21
177-6740	449	1-C 22
177-6741	421	1-C 20
177-6741	423	1-C 20
177-6743	435	1-C 21
177-6743	449	1-C 22
177-6747	435	1-C 21
177-6747	449	1-C 22
177-6752	435	1-C 21
177-6752	449	1-C 22
177-6754	435	1-C 21
177-6754	449	1-C 22
177-6755	435	1-C 21
177-6755	437	1-C 21
177-6755	449	1-C 22
177-6755	451	1-C 23
177-6757	435	1-C 21
177-6757	437	1-C 21
177-6757	449	1-C 22
177-6757	451	1-C 23
177-6758	435	1-C 21
177-6758	437	1-C 21
177-6758	449	1-C 22
177-6758	451	1-C 23
177-6760	435	1-C 21
177-6760	449	1-C 22
177-6761	439	1-C 21
177-6762	439	1-C 21
177-6763	439	1-C 21
177-6764	439	1-C 21
177-6765	439	1-C 21
177-6766	439	1-C 21
177-6767	439	1-C 21
177-6768	439	1-C 21
177-6769	437	1-C 21
177-6769	451	1-C 23
177-6770	433	1-C 21
177-6770	441	1-C 22
177-6771	435	1-C 21
177-6771	437	1-C 21
177-6771	449	1-C 22
177-6771	451	1-C 23
177-6774	421	1-C 20
177-6774	423	1-C 20
177-6775	421	1-C 20
177-6775	423	1-C 20
177-6781	493	1-D 3
177-6782	493	1-D 3
177-6783	493	1-D 3
177-6784	493	1-D 3
177-6795	435	1-C 21
177-6795	449	1-C 22
177-6797	427	1-C 20
177-6797	429	1-C 20
177-6797	431	1-C 21
177-6797	433	1-C 21
177-6797	437	1-C 21
177-6797	441	1-C 22
177-6797	443	1-C 22
177-6797	445	1-C 22
177-6797	447	1-C 22
177-6797	451	1-C 23
177-6797	525	1-D 6
177-6797	531	1-D 7
177-6797	537	1-D 7
177-6800	421	1-C 20
177-6800	423	1-C 20
177-6801	427	1-C 20
177-6801	429	1-C 20
177-6801	433	1-C 21
177-6801	435	1-C 21
177-6801	441	1-C 22
177-6801	443	1-C 22
177-6801	445	1-C 22
177-6801	449	1-C 22
177-6801	1263	1-G 8
177-6802	431	1-C 21
177-6802	447	1-C 22
177-6804	427	1-C 20
177-6804	429	1-C 20
177-6804	431	1-C 21
177-6804	433	1-C 21
177-6804	437	1-C 21
177-6804	441	1-C 22
177-6804	443	1-C 22
177-6804	445	1-C 22
177-6804	447	1-C 22
177-6804	451	1-C 23
177-6804	525	1-D 6
177-6804	531	1-D 7
177-6804	537	1-D 7
177-7107	613	1-D 15
177-9555	761	1-E 6
177-9641	1039	1-F 9
177-9642	1039	1-F 9
177-9645	1039	1-F 9
177-9778	177	1-B 19
177-9945	699	1-D 23
177-9945	703	1-D 24
177-9946	663	1-D 20
177-9946	665	1-D 20

Part No.	Page	Grid	Part No.	Page	Grid	Part No.	Page	Grid	Part No.	Page	Grid
177-9946	703	1-D 24	179-2261	1219	1-G 3	179-9480	501	1-D 4	180-4376	457	1-C 23
177-9947	663	1-D 20	179-2261	1221	1-G 4	179-9480	503	1-D 4	180-4376	459	1-C 23
177-9948	659	1-D 19	179-2261	1223	1-G 4	179-9480	517	1-D 5	180-4376	461	1-C 24
178-1202	667	1-D 20	179-2261	1225	1-G 4	179-9480	521	1-D 6	180-4376	463	1-C 24
178-1202	669	1-D 20	179-2886	99	1-B 11	179-9488	497	1-D 3	180-4376	465	1-C 24
178-1203	667	1-D 20	179-2887	99	1-B 11	179-9488	499	1-D 3	180-4376	467	1-C 24
178-1203	669	1-D 20	179-2957	1177	1-F 23	179-9488	501	1-D 4	180-4376	469	1-C 24
178-6238	1179	1-F 23	179-3317	977	1-F 3	179-9488	503	1-D 4	180-4376	471	1-D 1
178-7162	797	1-E 9	179-3317	981	1-F 4	179-9827	821	1-E 12	180-4376	473	1-D 1
178-7197	761	1-E 6	179-3317	985	1-F 4	179-9828	821	1-E 12	180-4376	475	1-D 1
178-7952	1127	1-F 18	179-3317	989	1-F 4	180-0184	873	1-E 17	180-4376	477	1-D 1
178-7953	1187	1-F 24	179-3318	957	1-F 1	180-0185	65	1-B 8	180-4376	479	1-D 1
178-7954	1187	1-F 24	179-3318	977	1-F 3	180-0185	67	1-B 8	180-4376	481	1-D 2
178-7957	355	1-C 13	179-3318	981	1-F 4	180-0185	69	1-B 8	180-4376	483	1-D 2
178-7957	359	1-C 13	179-3318	985	1-F 4	180-0185	71	1-B 9	180-4376	485	1-D 2
178-7974	1095	1-F 15	179-4203	1121	1-F 18	180-0185	875	1-E 17	180-4376	487	1-D 2
178-8047	567	1-D 10	179-4203	1123	1-F 18	180-0494	903	1-E 20	180-4376	489	1-D 2
178-8087	651	1-D 19	179-4204	359	1-C 13	180-0494	913	1-E 21	180-4376	491	1-D 3
178-9090	377	1-C 15	179-4206	1065	1-F 12	180-0495	905	1-E 20	180-4376	515	1-D 5
178-9090	383	1-C 16	179-4207	597	1-D 13	180-0495	917	1-E 21	180-4376	517	1-D 5
178-9244	1153	1-F 21	179-4207	599	1-D 13	180-0498	805	1-E 10	180-4376	519	1-D 5
178-9245	1153	1-F 21	179-4207	1065	1-F 12	180-0500	911	1-E 21	180-4376	521	1-D 6
179-0851	953	1-F 1	179-4219	1091	1-F 15	180-0500	915	1-E 21	180-4379	461	1-C 24
179-0852	981	1-F 4	179-4221	1095	1-F 15	180-0503	949	1-E 24	180-4379	471	1-D 1
179-0853	65	1-B 8	179-4223	1095	1-F 15	180-0503	951	1-F 1	180-4379	481	1-D 2
179-0853	67	1-B 8	179-4225	1095	1-F 15	180-0503	997	1-F 5	180-4379	491	1-D 3
179-0853	69	1-B 8	179-4227	1075	1-F 13	180-1434	903	1-E 20	180-4381	461	1-C 24
179-0853	71	1-B 9	179-4304	49	1-B 6	180-1438	905	1-E 20	180-4381	471	1-D 1
179-0853	955	1-F 1	179-4304	51	1-B 7	180-1667	751	1-E 5	180-4381	481	1-D 2
179-1952	49	1-B 6	179-4304	53	1-B 7	180-1667	755	1-E 5	180-4381	491	1-D 3
179-1952	51	1-B 7	179-4304	55	1-B 7	180-2455	1039	1-F 9	180-4382	461	1-C 24
179-1952	53	1-B 7	179-4304	57	1-B 7	180-2461	1039	1-F 9	180-4382	471	1-D 1
179-1952	55	1-B 7	179-4304	59	1-B 7	180-2463	1033	1-F 9	180-4382	481	1-D 2
179-1952	73	1-B 9	179-4304	61	1-B 8	180-2463	1039	1-F 9	180-4382	491	1-D 3
179-1953	73	1-B 9	179-4304	63	1-B 8	180-2464	1033	1-F 9	180-4384	461	1-C 24
179-1953	75	1-B 9	179-4304	403	1-C 18	180-2464	1039	1-F 9	180-4384	471	1-D 1
179-1953	547	1-D 8	179-4324	357	1-C 13	180-2465	1035	1-F 9	180-4384	481	1-D 2
179-1954	547	1-D 8	179-6897	733	1-E 3	180-2465	1041	1-F 10	180-4384	491	1-D 3
179-1954	579	1-D 11	179-6899	733	1-E 3	180-2466	1035	1-F 9	180-4387	461	1-C 24
179-2180	57	1-B 7	179-6901	733	1-E 3	180-2466	1041	1-F 10	180-4387	471	1-D 1
179-2180	59	1-B 7	179-8220	1067	1-F 12	180-2467	1035	1-F 9	180-4387	481	1-D 2
179-2180	61	1-B 8	179-8664	843	1-E 14	180-2467	1041	1-F 10	180-4387	491	1-D 3
179-2180	63	1-B 8	179-8664	855	1-E 15	180-2468	1035	1-F 9	180-4502	457	1-C 23
179-2180	75	1-B 9	179-9006	457	1-C 23	180-2468	1041	1-F 10	180-4502	461	1-C 24
179-2182	185	1-B 20	179-9006	461	1-C 24	180-2469	1035	1-F 9	180-4502	467	1-C 24
179-2182	547	1-D 8	179-9006	467	1-C 24	180-2469	1041	1-F 10	180-4502	471	1-D 1
179-2183	85	1-B 10	179-9006	471	1-D 1	180-2470	1031	1-F 9	180-4502	477	1-D 1
179-2183	87	1-B 10	179-9006	477	1-D 1	180-2471	1035	1-F 9	180-4502	481	1-D 2
179-2183	89	1-B 10	179-9006	481	1-D 2	180-2471	1041	1-F 10	180-4502	487	1-D 2
179-2183	91	1-B 11	179-9006	487	1-D 2	180-2519	751	1-E 5	180-4502	491	1-D 3
179-2183	181	1-B 20	179-9006	491	1-D 3	180-2519	755	1-E 5	180-4505	457	1-C 23
179-2185	73	1-B 9	179-9007	497	1-D 3	180-2825	1177	1-F 23	180-4505	461	1-C 24
179-2185	1227	1-G 4	179-9007	499	1-D 3	180-2924	85	1-B 10	180-4505	467	1-C 24
179-2185	1229	1-G 4	179-9007	501	1-D 4	180-2924	87	1-B 10	180-4505	471	1-D 1
179-2185	1231	1-G 5	179-9007	503	1-D 4	180-2924	89	1-B 10	180-4505	477	1-D 1
179-2185	1233	1-G 5	179-9471	497	1-D 3	180-2924	91	1-B 11	180-4505	481	1-D 2
179-2185	1235	1-G 5	179-9471	499	1-D 3	180-2924	313	1-C 9	180-4505	487	1-D 2
179-2193	57	1-B 7	179-9471	501	1-D 4	180-2937	93	1-B 11	180-4505	491	1-D 3
179-2194	59	1-B 7	179-9471	503	1-D 4	180-2937	95	1-B 11	180-5237	1065	1-F 12
179-2195	61	1-B 8	179-9476	497	1-D 3	180-2937	717	1-E 1	180-5239	1095	1-F 15
179-2196	63	1-B 8	179-9476	499	1-D 3	180-2937	721	1-E 2	180-5244	355	1-C 13
179-2248	1243	1-G 6	179-9476	501	1-D 4	180-2937	763	1-E 6	180-5244	359	1-C 13
179-2249	1247	1-G 6	179-9476	503	1-D 4	180-2937	767	1-E 6	180-5485	761	1-E 6
179-2250	1255	1-G 7	179-9477	497	1-D 3	180-3667	669	1-D 20	180-6240	1091	1-F 15
179-2251	1251	1-G 7	179-9477	499	1-D 3	180-3669	667	1-D 20	180-6240	1093	1-F 15
179-2252	1245	1-G 6	179-9477	501	1-D 4	180-4036	949	1-E 24	180-6639	983	1-F 4
179-2254	1249	1-G 6	179-9477	503	1-D 4	180-4036	953	1-F 1	180-6640	959	1-F 1
179-2255	1253	1-G 7	179-9478	497	1-D 3	180-4036	969	1-F 2	180-6640	979	1-F 3
179-2257	149	1-B 16	179-9478	499	1-D 3	180-4038	955	1-F 1	180-6640	983	1-F 4
179-2261	75	1-B 9	179-9478	501	1-D 4	180-4038	1017	1-F 7	180-6640	987	1-F 4
179-2261	1209	1-G 2	179-9478	503	1-D 4	180-4039	947	1-E 24	180-7174	799	1-E 9
179-2261	1211	1-G 3	179-9479	497	1-D 3	180-4039	949	1-E 24	180-8369	529	1-D 6
179-2261	1213	1-G 3	179-9479	499	1-D 3	180-4039	953	1-F 1	180-8369	535	1-D 7
179-2261	1215	1-G 3	179-9479	515	1-D 5	180-4039	955	1-F 1	180-8369	541	1-D 8
179-2261	1217	1-G 3	179-9479	519	1-D 5	180-4376	455	1-C 23	180-8378	525	1-D 6

INDEX

Part No.	Page	Grid
180-8378	531	1-D 7
180-8378	537	1-D 7
180-8382	525	1-D 6
180-8382	531	1-D 7
180-8382	537	1-D 7
180-8385	525	1-D 6
180-8385	531	1-D 7
180-8385	537	1-D 7
180-8393	525	1-D 6
180-8393	531	1-D 7
180-8393	537	1-D 7
180-8395	525	1-D 6
180-8395	531	1-D 7
180-8395	537	1-D 7
180-8428	457	1-C 23
180-8428	467	1-C 24
180-8428	477	1-D 1
180-8428	487	1-D 2
180-8431	505	1-D 4
180-8431	507	1-D 4
180-8431	509	1-D 4
180-9214	1041	1-F 10
180-9966	1059	1-F 11
180-9966	1061	1-F 12
183-2197	665	1-D 20
183-2198	661	1-D 20
183-2317	453	1-C 23
183-3411	457	1-C 23
183-3411	467	1-C 24
183-3411	477	1-D 1
183-3411	487	1-D 2
183-3413	457	1-C 23
183-3413	467	1-C 24
183-3413	477	1-D 1
183-3413	487	1-D 2
183-3414	457	1-C 23
183-3414	467	1-C 24
183-3414	477	1-D 1
183-3414	487	1-D 2
183-3415	461	1-C 24
183-3415	471	1-D 1
183-3415	481	1-D 2
183-3415	491	1-D 3
183-3416	461	1-C 24
183-3416	471	1-D 1
183-3416	481	1-D 2
183-3416	491	1-D 3
183-4130	579	1-D 11
183-4131	579	1-D 11
183-4132	579	1-D 11
183-4145	579	1-D 11
183-4241	753	1-E 5
183-4241	757	1-E 5
183-4396	963	1-F 2
183-4396	977	1-F 3
183-4396	979	1-F 3
183-4396	981	1-F 4
183-4396	983	1-F 4
183-4396	985	1-F 4
183-4396	987	1-F 4
183-4470	661	1-D 20
183-4470	665	1-D 20
183-4470	1009	1-F 6
183-4470	1011	1-F 7
183-4470	1013	1-F 7
183-5789	619	1-D 15
183-6384	73	1-B 9
183-6384	75	1-B 9
183-6384	633	1-D 17
183-7892	621	1-D 16
183-7894	621	1-D 16
183-8600	697	1-D 23
183-8600	699	1-D 23
183-9281	1205	1-G 2
184-0790	667	1-D 20
184-0790	669	1-D 20
184-1693	457	1-C 23
184-1693	461	1-C 24
184-1693	467	1-C 24
184-1693	471	1-D 1
184-1693	477	1-D 1
184-1693	481	1-D 2
184-1693	487	1-D 2
184-1693	491	1-D 3
184-1694	457	1-C 23
184-1694	467	1-C 24
184-1694	477	1-D 1
184-1694	487	1-D 2
184-1695	457	1-C 23
184-1695	461	1-C 24
184-1695	467	1-C 24
184-1695	471	1-D 1
184-1695	477	1-D 1
184-1695	481	1-D 2
184-1695	487	1-D 2
184-1695	491	1-D 3
184-1695	1263	1-G 8
184-1696	457	1-C 23
184-1696	461	1-C 24
184-1696	467	1-C 24
184-1696	471	1-D 1
184-1696	477	1-D 1
184-1696	481	1-D 2
184-1696	487	1-D 2
184-1696	491	1-D 3
184-1697	461	1-C 24
184-1697	471	1-D 1
184-1697	481	1-D 2
184-1697	491	1-D 3
184-1704	1177	1-F 23
184-2472	377	1-C 15
184-2472	383	1-C 16
184-4356	693	1-D 23
184-4356	695	1-D 23
184-5033	949	1-E 24
184-5035	949	1-E 24
184-5035	951	1-F 1
184-5035	1005	1-F 6
184-5042	969	1-F 2
184-5049	969	1-F 2
184-5051	969	1-F 2
184-5053	969	1-F 2
184-5055	969	1-F 2
184-5060	969	1-F 2
184-5062	969	1-F 2
184-5062	971	1-F 3
184-5063	1001	1-F 6
184-5065	979	1-F 3
184-5065	983	1-F 4
184-5065	987	1-F 4
184-5065	991	1-F 5
184-5329	559	1-D 9
184-5337	549	1-D 8
184-5338	739	1-E 3
184-5338	743	1-E 4
184-5352	743	1-E 4
184-5356	549	1-D 8
184-5356	555	1-D 9
184-5356	557	1-D 9
184-5356	559	1-D 9
184-5356	561	1-D 10
184-5356	563	1-D 10
184-5357	65	1-B 8
184-5357	67	1-B 8
184-5357	69	1-B 8
184-5357	71	1-B 9
184-5357	563	1-D 10
184-6718	673	1-D 21
184-6718	675	1-D 21
184-6718	687	1-D 22
184-7171	113	1-B 13
184-7976	633	1-D 17
184-7977	633	1-D 17
184-7978	633	1-D 17
184-7979	633	1-D 17
184-7980	633	1-D 17
184-7985	633	1-D 17
185-2151	1153	1-F 21
185-2151	1263	1-G 8
185-2220	85	1-B 10
185-2220	87	1-B 10
185-2220	89	1-B 10
185-2220	91	1-B 11
185-2220	147	1-B 16
185-2225	127	1-B 14
185-2226	127	1-B 14
185-2227	127	1-B 14
185-2237	77	1-B 9
185-2237	79	1-B 9
185-2237	81	1-B 10
185-2237	83	1-B 10
185-2237	121	1-B 14
185-2239	85	1-B 10
185-2239	87	1-B 10
185-2239	123	1-B 14
185-2240	89	1-B 10
185-2240	91	1-B 11
185-2240	125	1-B 14
185-3955	413	1-C 19
185-3955	515	1-D 5
185-3956	415	1-C 19
185-3956	517	1-D 5
185-3957	417	1-C 19
185-3957	519	1-D 5
185-3958	419	1-C 19
185-3958	521	1-D 6
185-4015	1033	1-F 9
185-4015	1039	1-F 9
185-4422	461	1-C 24
185-4422	471	1-D 1
185-4422	481	1-D 2
185-4422	491	1-D 3
185-4423	461	1-C 24
185-4423	471	1-D 1
185-4423	481	1-D 2
185-4423	491	1-D 3
185-8617	397	1-C 17
185-8688	551	1-D 9
185-8690	553	1-D 9
185-8699	801	1-E 10
185-8701	803	1-E 10
185-8720	569	1-D 10
185-8737	519	1-D 5
185-8737	521	1-D 6
185-8737	523	1-D 6
185-8787	75	1-B 9
185-8787	741	1-E 4
185-8848	1257	1-G 7
185-8849	585	1-D 12
185-8860	717	1-E 1
185-9754	761	1-E 6
185-9756	761	1-E 6
185-9769	761	1-E 6
185-9771	761	1-E 6
185-9774	761	1-E 6
186-0342	923	1-E 22
186-0346	923	1-E 22
186-0346	925	1-E 22
186-0370	925	1-E 22
186-0372	923	1-E 22
186-0373	923	1-E 22
186-0373	925	1-E 22
186-0377	923	1-E 22
186-0466	581	1-D 12
186-0979	985	1-F 4
186-0983	1001	1-F 6
186-0994	969	1-F 2
186-0994	971	1-F 3
186-0995	969	1-F 2
186-0995	971	1-F 3
186-1000	961	1-F 2
186-1020	1001	1-F 6
186-1063	989	1-F 4
186-1063	991	1-F 5
186-1063	1015	1-F 7
186-1064	1015	1-F 7
186-1071	971	1-F 3
186-1077	971	1-F 3
186-1078	971	1-F 3
186-1090	989	1-F 4
186-1090	991	1-F 5
186-1090	1001	1-F 6
186-1091	989	1-F 4
186-1091	991	1-F 5
186-1091	1003	1-F 6
186-1093	1001	1-F 6
186-1095	1001	1-F 6
186-1620	719	1-E 1
186-1671	77	1-B 9
186-1671	79	1-B 9
186-1671	81	1-B 10
186-1671	83	1-B 10
186-1671	307	1-C 8
186-2427	75	1-B 9
186-2427	577	1-D 11
186-2867	457	1-C 23
186-2867	467	1-C 24
186-2867	477	1-D 1
186-2867	487	1-D 2
186-2868	455	1-C 23
186-2868	463	1-C 24
186-2868	473	1-D 1
186-2868	483	1-D 2
186-2869	457	1-C 23
186-2869	467	1-C 24
186-2869	477	1-D 1
186-2869	487	1-D 2
186-2869	1263	1-G 8
186-3735	265	1-C 4
186-3735	353	1-C 13
186-3735	373	1-C 15
186-3735	827	1-E 12
186-5431	185	1-B 20
186-5431	625	1-D 16
186-5431	627	1-D 16
186-5431	629	1-D 16
186-5432	185	1-B 20
186-5432	189	1-B 20
187-1062	627	1-D 16
187-1069	627	1-D 16
187-1376	421	1-C 20
187-1376	423	1-C 20
187-1377	455	1-C 23
187-1377	463	1-C 24
187-1377	473	1-D 1
187-1377	483	1-D 2
187-1740	85	1-B 10
187-1740	87	1-B 10
187-1740	89	1-B 10
187-1740	91	1-B 11
187-1740	309	1-C 8
187-1741	57	1-B 7
187-1741	79	1-B 9
187-1742	59	1-B 7
187-1742	83	1-B 10
187-1743	61	1-B 8
187-1743	87	1-B 10
187-1744	63	1-B 8
187-1744	91	1-B 11
187-1791	77	1-B 9

Part No.	Page	Grid	Part No.	Page	Grid	Part No.	Page	Grid	Part No.	Page	Grid
187-1791	79	1-B 9	187-8141	537	1-D 7	189-2089	481	1-D 2	190-2608	991	1-F 5
187-1791	81	1-B 10	187-8142	539	1-D 7	189-2089	487	1-D 2	190-2609	989	1-F 4
187-1791	83	1-B 10	187-8609	75	1-B 9	189-2089	491	1-D 3	190-2609	991	1-F 5
187-1791	85	1-B 10	187-8609	583	1-D 12	189-2976	661	1-D 20	190-2613	1005	1-F 6
187-1791	87	1-B 10	187-8611	583	1-D 12	189-2976	665	1-D 20	190-2624	989	1-F 4
187-1791	89	1-B 10	187-8947	435	1-C 21	189-2976	999	1-F 5	190-2624	991	1-F 5
187-1791	91	1-B 11	187-8947	437	1-C 21	189-2976	1009	1-F 6	190-2838	211	1-B 23
187-1791	105	1-B 12	187-8947	449	1-C 22	189-2976	1011	1-F 7	190-2839	211	1-B 23
187-1792	77	1-B 9	187-8947	451	1-C 23	189-3141	819	1-E 11	190-3118	883	1-E 18
187-1792	79	1-B 9	187-8947	1263	1-G 8	189-3142	821	1-E 12	190-3118	887	1-E 18
187-1792	81	1-B 10	187-9009	93	1-B 11	189-3142	1263	1-G 8	190-5441	547	1-D 8
187-1792	83	1-B 10	187-9009	99	1-B 11	189-3143	809	1-E 10	190-5441	631	1-D 17
187-1792	85	1-B 10	187-9012	751	1-E 5	189-3165	667	1-D 20	190-5942	571	1-D 11
187-1792	87	1-B 10	187-9012	755	1-E 5	189-3165	669	1-D 20	190-5943	571	1-D 11
187-1792	89	1-B 10	187-9020	753	1-E 5	189-3296	1001	1-F 6	190-5943	597	1-D 13
187-1792	91	1-B 11	187-9020	757	1-E 5	189-3296	1003	1-F 6	190-5943	601	1-D 14
187-1792	119	1-B 13	188-0452	599	1-D 13	189-3300	987	1-F 4	190-6043	967	1-F 2
187-3185	761	1-E 6	188-0452	603	1-D 14	189-3302	991	1-F 5	190-6501	885	1-E 18
187-3367	455	1-C 23	188-0453	599	1-D 13	189-3307	989	1-F 4	190-6501	889	1-E 18
187-3367	463	1-C 24	188-0453	603	1-D 14	189-3307	991	1-F 5	190-6525	887	1-E 18
187-3367	473	1-D 1	188-0497	627	1-D 16	189-3308	989	1-F 4	190-6526	887	1-E 18
187-3367	483	1-D 2	188-0514	597	1-D 13	189-3308	991	1-F 5	190-8326	1177	1-F 23
187-3368	455	1-C 23	188-0514	601	1-D 14	189-3310	957	1-F 1	191-0426	427	1-C 20
187-3368	463	1-C 24	188-0564	599	1-D 13	189-3313	957	1-F 1	191-0426	431	1-C 21
187-3368	473	1-D 1	188-0564	603	1-D 14	189-3325	1017	1-F 7	191-0426	443	1-C 22
187-3368	483	1-D 2	188-0568	601	1-D 14	189-4286	591	1-D 13	191-0426	447	1-C 22
187-3369	455	1-C 23	188-0632	455	1-C 23	189-4287	591	1-D 13	191-0427	427	1-C 20
187-3369	463	1-C 24	188-0632	463	1-C 24	189-4288	591	1-D 13	191-0427	429	1-C 20
187-3369	473	1-D 1	188-0632	473	1-D 1	189-4289	591	1-D 13	191-0427	433	1-C 21
187-3369	483	1-D 2	188-0632	483	1-D 2	189-5477	283	1-C 6	191-0427	441	1-C 22
187-3370	455	1-C 23	188-0633	455	1-C 23	189-5805	547	1-D 8	191-0427	443	1-C 22
187-3370	463	1-C 24	188-0633	463	1-C 24	189-5805	591	1-D 13	191-0427	445	1-C 22
187-3370	473	1-D 1	188-0633	473	1-D 1	189-5906	803	1-E 10	191-0428	435	1-C 21
187-3370	483	1-D 2	188-0633	483	1-D 2	189-5906	807	1-E 10	191-0428	449	1-C 22
187-3371	455	1-C 23	188-0635	457	1-C 23	189-5910	801	1-E 10	191-0429	437	1-C 21
187-3371	463	1-C 24	188-0635	461	1-C 24	189-5910	805	1-E 10	191-0429	451	1-C 23
187-3371	473	1-D 1	188-0635	467	1-C 24	189-5987	967	1-F 2	191-1907	455	1-C 23
187-3371	483	1-D 2	188-0635	471	1-D 1	189-5989	967	1-F 2	191-1907	463	1-C 24
187-3372	455	1-C 23	188-0635	477	1-D 1	189-9922	1173	1-F 23	191-1907	473	1-D 1
187-3372	463	1-C 24	188-0635	481	1-D 2	190-0429	753	1-E 5	191-1907	483	1-D 2
187-3372	473	1-D 1	188-0635	487	1-D 2	190-0429	757	1-E 5	191-1908	455	1-C 23
187-3372	483	1-D 2	188-0635	491	1-D 3	190-0435	717	1-E 1	191-1908	463	1-C 24
187-3373	455	1-C 23	188-0762	627	1-D 16	190-0435	719	1-E 1	191-1908	473	1-D 1
187-3373	463	1-C 24	188-0763	627	1-D 16	190-0435	721	1-E 2	191-1908	483	1-D 2
187-3373	473	1-D 1	188-0764	627	1-D 16	190-0435	723	1-E 2	191-1909	455	1-C 23
187-3373	483	1-D 2	188-0765	627	1-D 16	190-0435	761	1-E 6	191-1909	463	1-C 24
187-3374	455	1-C 23	188-0766	627	1-D 16	190-0435	763	1-E 6	191-1909	473	1-D 1
187-3374	463	1-C 24	188-0768	627	1-D 16	190-0435	765	1-E 6	191-1909	483	1-D 2
187-3374	473	1-D 1	188-0769	627	1-D 16	190-0435	767	1-E 6	191-1910	455	1-C 23
187-3374	483	1-D 2	188-0771	191	1-B 21	190-0435	769	1-E 6	191-1910	463	1-C 24
187-4896	327	1-C 10	188-0772	625	1-D 16	190-0436	717	1-E 1	191-1910	473	1-D 1
187-4906	1095	1-F 15	188-0773	625	1-D 16	190-0436	719	1-E 1	191-1910	483	1-D 2
187-4921	1095	1-F 15	188-0774	627	1-D 16	190-0436	751	1-E 5	191-1911	455	1-C 23
187-4930	515	1-D 5	188-0775	627	1-D 16	190-0436	753	1-E 5	191-1911	463	1-C 24
187-4930	517	1-D 5	188-0776	627	1-D 16	190-0438	717	1-E 1	191-1911	473	1-D 1
187-4930	525	1-D 6	188-0777	625	1-D 16	190-0438	719	1-E 1	191-1911	483	1-D 2
187-4930	527	1-D 6	188-0778	625	1-D 16	190-0438	721	1-E 2	191-1912	455	1-C 23
187-4930	529	1-D 6	188-0779	625	1-D 16	190-0438	723	1-E 2	191-1912	463	1-C 24
187-4930	531	1-D 7	188-1155	1257	1-G 7	190-0438	763	1-E 6	191-1912	473	1-D 1
187-4930	533	1-D 7	188-2162	421	1-C 20	190-0438	765	1-E 6	191-1912	483	1-D 2
187-4930	535	1-D 7	188-2162	423	1-C 20	190-0438	833	1-E 13	191-2276	357	1-C 13
187-4930	537	1-D 7	188-2618	1203	1-G 2	190-0439	763	1-E 6	191-5262	527	1-D 6
187-4930	539	1-D 7	188-3642	921	1-E 22	190-0440	765	1-E 6	191-5262	533	1-D 7
187-4930	541	1-D 8	188-7731	529	1-D 6	190-0446	761	1-E 6	191-5262	539	1-D 7
187-4930	1009	1-F 6	188-7731	535	1-D 7	190-1482	77	1-B 9	191-5988	151	1-B 17
187-4930	1011	1-F 7	188-7731	541	1-D 8	190-1482	79	1-B 9	191-5988	153	1-B 17
187-5245	761	1-E 6	188-9912	421	1-C 20	190-1482	81	1-B 10	191-8006	1257	1-G 7
187-5246	761	1-E 6	188-9912	423	1-C 20	190-1482	83	1-B 10	191-8007	1257	1-G 7
187-6226	435	1-C 21	189-1711	667	1-D 20	190-1482	85	1-B 10	191-8303	453	1-C 23
187-6226	437	1-C 21	189-1711	669	1-D 20	190-1482	87	1-B 10	191-8304	453	1-C 23
187-6226	449	1-C 22	189-2089	457	1-C 23	190-1482	89	1-B 10	192-0938	891	1-E 19
187-6226	451	1-C 23	189-2089	461	1-C 24	190-1482	91	1-B 11	192-0976	621	1-D 16
187-7430	913	1-E 21	189-2089	467	1-C 24	190-1482	127	1-B 14	192-1463	115	1-B 13
187-7430	917	1-E 21	189-2089	471	1-D 1	190-2601	957	1-F 1	192-3042	585	1-D 12
187-7430	919	1-E 21	189-2089	477	1-D 1	190-2608	989	1-F 4	192-3042	587	1-D 12

INDEX

Part No.	Page	Grid	Part No.	Page	Grid	Part No.	Page	Grid	Part No.	Page	Grid
192-4158	281	1-C 6	193-2265	123	1-B 14	196-3968	1191	1-G 1	197-4550	1157	1-F 21
192-4707	893	1-E 19	193-2266	107	1-B 12	196-4055	151	1-B 17	197-4849	85	1-B 10
192-4707	929	1-E 22	193-2266	121	1-B 14	196-4056	151	1-B 17	197-4849	87	1-B 10
192-4708	897	1-E 19	193-2271	109	1-B 12	196-4056	157	1-B 17	197-4849	89	1-B 10
192-4708	911	1-E 21	193-2272	107	1-B 12	196-4249	945	1-E 24	197-4849	91	1-B 11
192-4708	977	1-F 3	193-4445	1033	1-F 9	196-6944	571	1-D 11	197-4849	165	1-B 18
192-4708	979	1-F 3	193-4752	381	1-C 16	196-6946	571	1-D 11	197-4852	165	1-B 18
192-4776	173	1-B 19	193-7868	195	1-B 21	196-6954	571	1-D 11	197-5411	455	1-C 23
192-4777	173	1-B 19	193-8098	859	1-E 15	196-7742	189	1-B 20	197-5411	463	1-C 24
192-4816	727	1-E 2	193-8197	893	1-E 19	196-7742	191	1-B 21	197-5411	473	1-D 1
192-4816	895	1-E 19	193-8198	897	1-E 19	196-7824	631	1-D 17	197-5411	483	1-D 2
192-4816	899	1-E 19	193-8199	725	1-E 2	196-9864	585	1-D 12	197-5414	837	1-E 13
192-4816	909	1-E 20	193-8199	899	1-E 19	196-9866	585	1-D 12	197-5675	111	1-B 13
192-4817	901	1-E 20	193-8200	901	1-E 20	196-9866	587	1-D 12	197-5675	125	1-B 14
192-4817	915	1-E 21	193-8200	985	1-F 4	197-0749	93	1-B 11	197-5676	111	1-B 13
192-4975	435	1-C 21	193-8200	987	1-F 4	197-1317	183	1-B 20	197-5852	1177	1-F 23
192-4975	449	1-C 22	194-7019	497	1-D 3	197-1317	187	1-B 20	197-6291	123	1-B 14
192-5602	477	1-D 1	194-7620	383	1-C 16	197-1437	99	1-B 11	197-6291	1263	1-G 8
192-5602	487	1-D 2	194-7966	77	1-B 9	197-2996	779	1-E 7	197-6292	125	1-B 14
192-5642	265	1-C 4	194-7966	79	1-B 9	197-2997	779	1-E 7	197-6292	1263	1-G 8
192-5643	265	1-C 4	194-7966	81	1-B 10	197-2998	779	1-E 7	197-7948	183	1-B 20
192-5644	265	1-C 4	194-7966	83	1-B 10	197-2999	779	1-E 7	197-8128	625	1-D 16
192-6350	73	1-B 9	194-7966	145	1-B 16	197-3000	779	1-E 7	197-8131	625	1-D 16
192-6350	75	1-B 9	195-0499	625	1-D 16	197-3083	1095	1-F 15	197-8558	55	1-B 7
192-6350	737	1-E 3	195-0500	625	1-D 16	197-3667	677	1-D 21	197-8558	63	1-B 8
192-6360	75	1-B 9	195-0501	625	1-D 16	197-4516	1159	1-F 21	197-8558	187	1-B 20
192-6360	735	1-E 3	195-0502	627	1-D 16	197-4516	1161	1-F 22	198-0187	85	1-B 10
192-6366	751	1-E 5	195-1004	591	1-D 13	197-4517	1159	1-F 21	198-0187	87	1-B 10
192-6366	755	1-E 5	195-1016	591	1-D 13	197-4518	1159	1-F 21	198-0187	89	1-B 10
192-6371	735	1-E 3	195-2612	1171	1-F 23	197-4519	1159	1-F 21	198-0187	91	1-B 11
192-6383	731	1-E 3	195-2615	633	1-D 17	197-4519	1161	1-F 22	198-0187	177	1-B 19
192-6386	183	1-B 20	195-2616	633	1-D 17	197-4520	1159	1-F 21	198-0188	77	1-B 9
192-6390	723	1-E 2	195-3252	455	1-C 23	197-4520	1161	1-F 22	198-0188	79	1-B 9
192-6392	751	1-E 5	195-3252	463	1-C 24	197-4521	1159	1-F 21	198-0188	81	1-B 10
192-6392	755	1-E 5	195-3252	473	1-D 1	197-4521	1161	1-F 22	198-0188	83	1-B 10
192-6398	759	1-E 5	195-3252	483	1-D 2	197-4522	1159	1-F 21	198-0188	175	1-B 19
192-6400	721	1-E 2	195-4507	1099	1-F 15	197-4522	1161	1-F 22	198-0288	455	1-C 23
192-6457	631	1-D 17	195-4512	1099	1-F 15	197-4523	1155	1-F 21	198-0288	463	1-C 24
192-6460	151	1-B 17	195-4513	1099	1-F 15	197-4524	1155	1-F 21	198-0288	473	1-D 1
192-6460	153	1-B 17	195-4519	133	1-B 15	197-4525	1159	1-F 21	198-0288	483	1-D 2
192-6516	599	1-D 13	195-4519	135	1-B 15	197-4525	1161	1-F 22	198-1013	453	1-C 23
192-6516	601	1-D 14	195-4520	1103	1-F 16	197-4526	1159	1-F 21	198-1013	513	1-D 5
192-6518	599	1-D 13	195-5221	1205	1-G 2	197-4526	1161	1-F 22	198-1955	99	1-B 11
192-6529	581	1-D 12	195-5227	1067	1-F 12	197-4527	1155	1-F 21	198-1961	99	1-B 11
192-7901	677	1-D 21	195-5228	1067	1-F 12	197-4527	1157	1-F 21	198-1962	93	1-B 11
192-8979	153	1-B 17	195-5228	1069	1-F 12	197-4529	1155	1-F 21	198-2898	129	1-B 14
192-8980	153	1-B 17	195-5229	1067	1-F 12	197-4529	1157	1-F 21	198-2900	129	1-B 14
192-8980	155	1-B 17	195-5230	1067	1-F 12	197-4530	1167	1-F 22	198-4070	1027	1-F 8
192-9017	1067	1-F 12	195-5968	65	1-B 8	197-4530	1169	1-F 22	198-4070	1029	1-F 8
193-0238	1031	1-F 9	195-5968	67	1-B 8	197-4531	1167	1-F 22	198-4265	837	1-E 13
193-0362	497	1-D 3	195-5968	69	1-B 8	197-4531	1169	1-F 22	198-4474	1259	1-G 7
193-0362	499	1-D 3	195-5968	71	1-B 9	197-4532	1167	1-F 22	198-4475	1259	1-G 7
193-0362	501	1-D 4	195-5968	345	1-C 12	197-4532	1169	1-F 22	198-4477	1259	1-G 7
193-0362	503	1-D 4	195-9532	365	1-C 14	197-4533	1167	1-F 22	198-6068	137	1-B 15
193-0363	497	1-D 3	195-9633	565	1-D 10	197-4533	1169	1-F 22	198-8376	211	1-B 23
193-0363	499	1-D 3	195-9633	567	1-D 10	197-4534	1167	1-F 22	198-8377	211	1-B 23
193-0363	501	1-D 4	195-9633	569	1-D 10	197-4534	1169	1-F 22	198-8378	989	1-F 4
193-0363	503	1-D 4	196-1969	761	1-E 6	197-4537	1167	1-F 22	198-8378	991	1-F 5
193-0650	505	1-D 4	196-1970	761	1-E 6	197-4537	1169	1-F 22	199-2086	627	1-D 16
193-0650	507	1-D 4	196-1971	761	1-E 6	197-4538	1167	1-F 22	199-3481	247	1-C 2
193-0650	509	1-D 4	196-2318	729	1-E 2	197-4538	1169	1-F 22	199-3481	249	1-C 2
193-1423	151	1-B 17	196-2318	909	1-E 20	197-4539	1167	1-F 22	199-3481	251	1-C 3
193-1423	153	1-B 17	196-2318	915	1-E 21	197-4540	1167	1-F 22	199-4273	529	1-D 6
193-1547	73	1-B 9	196-2318	931	1-E 23	197-4540	1169	1-F 22	199-4273	535	1-D 7
193-1547	75	1-B 9	196-2993	957	1-F 1	197-4541	1167	1-F 22	199-4273	541	1-D 8
193-1547	747	1-E 4	196-2994	957	1-F 1	197-4541	1169	1-F 22	199-6263	211	1-B 23
193-1547	749	1-E 4	196-2997	957	1-F 1	197-4544	1163	1-F 22	199-6265	971	1-F 3
193-1548	863	1-E 16	196-2997	959	1-F 1	197-4544	1165	1-F 22	199-7107	457	1-C 23
193-1548	893	1-E 19	196-3036	971	1-F 3	197-4545	1167	1-F 22	199-7107	461	1-C 24
193-1548	897	1-E 19	196-3037	971	1-F 3	197-4546	1163	1-F 22	199-7107	467	1-C 24
193-1558	729	1-E 2	196-3052	971	1-F 3	197-4546	1165	1-F 22	199-7107	471	1-D 1
193-1558	841	1-E 14	196-3968	1049	1-F 10	197-4547	1167	1-F 22	199-7107	477	1-D 1
193-1558	899	1-E 19	196-3968	1051	1-F 11	197-4547	1169	1-F 22	199-7107	481	1-D 2
193-1558	901	1-E 20	196-3968	1055	1-F 11	197-4548	1169	1-F 22	199-7107	487	1-D 2
193-2265	109	1-B 12	196-3968	1057	1-F 11	197-4550	1155	1-F 21	199-7107	491	1-D 3

Part No.	Page	Grid	Part No.	Page	Grid	Part No.	Page	Grid	Part No.	Page	Grid
199-7855	573	1-D 11	200-2993	841	1-E 14	201-5096	1205	1-G 2	204-0627	139	1-B 15
199-7855	575	1-D 11	200-2993	857	1-E 15	201-8342	991	1-F 5	204-5043	617	1-D 15
199-7859	573	1-D 11	200-3039	427	1-C 20	201-8344	991	1-F 5	204-9922	621	1-D 16
199-7859	575	1-D 11	200-3039	429	1-C 20	201-8438	779	1-E 7	205-1388	625	1-D 16
199-9240	427	1-C 20	200-3039	431	1-C 21	201-9041	231	1-C 1	205-1390	627	1-D 16
199-9240	429	1-C 20	200-3039	433	1-C 21	201-9789	1067	1-F 12	205-1394	625	1-D 16
199-9240	431	1-C 21	200-3039	435	1-C 21	201-9927	679	1-D 21	205-1395	625	1-D 16
199-9240	433	1-C 21	200-3039	437	1-C 21	201-9927	701	1-D 24	205-1396	625	1-D 16
199-9240	435	1-C 21	200-3039	441	1-C 22	201-9928	681	1-D 22	205-1397	625	1-D 16
199-9240	437	1-C 21	200-3039	443	1-C 22	201-9928	703	1-D 24	205-1645	135	1-B 15
199-9240	441	1-C 22	200-3039	445	1-C 22	201-9930	679	1-D 21	205-1646	135	1-B 15
199-9240	443	1-C 22	200-3039	447	1-C 22	201-9931	681	1-D 22	205-1647	133	1-B 15
199-9240	445	1-C 22	200-3039	449	1-C 22	201-9932	679	1-D 21	205-1648	133	1-B 15
199-9240	447	1-C 22	200-3039	451	1-C 23	201-9932	681	1-D 22	205-2132	161	1-B 18
199-9240	449	1-C 22	200-3039	527	1-D 6	202-0843	1061	1-F 12	205-2133	161	1-B 18
199-9240	451	1-C 23	200-3039	533	1-D 7	202-0844	367	1-C 14	205-2134	159	1-B 17
199-9240	527	1-D 6	200-3039	539	1-D 7	202-0844	369	1-C 14	205-2135	159	1-B 17
199-9240	533	1-D 7	200-4310	721	1-E 2	202-0848	1095	1-F 15	205-5367	169	1-B 18
199-9240	539	1-D 7	200-4310	723	1-E 2	202-2356	571	1-D 11	205-6398	781	1-E 8
2A-3746	457	1-C 23	200-4310	755	1-E 5	202-2357	571	1-D 11	205-6398	881	1-E 18
2A-3746	467	1-C 24	200-4310	757	1-E 5	202-2792	791	1-E 9	205-6399	881	1-E 18
2A-3746	477	1-D 1	200-4316	743	1-E 4	202-7320	251	1-C 3	205-6400	881	1-E 18
2A-3746	487	1-D 2	200-4317	735	1-E 3	202-7320	255	1-C 3	205-6400	891	1-E 19
2D-9190	525	1-D 6	200-4320	75	1-B 9	202-7320	257	1-C 3	205-6410	945	1-E 24
2D-9190	531	1-D 7	200-4320	759	1-E 5	202-9220	555	1-D 9	205-6411	945	1-E 24
2D-9190	537	1-D 7	200-4321	759	1-E 5	202-9220	557	1-D 9	205-6412	881	1-E 18
2H-1190	455	1-C 23	200-4322	743	1-E 4	202-9220	559	1-D 9	205-6412	945	1-E 24
2H-1190	463	1-C 24	200-4323	735	1-E 3	202-9220	561	1-D 10	205-6464	945	1-E 24
2H-1190	473	1-D 1	200-4325	773	1-E 7	202-9220	563	1-D 10	205-8334	397	1-C 17
2H-1190	483	1-D 2	200-4327	773	1-E 7	202-9223	555	1-D 9	205-8771	241	1-C 2
2H-5549	455	1-C 23	200-4329	773	1-E 7	202-9223	557	1-D 9	205-8772	243	1-C 2
2H-5549	465	1-C 24	200-4335	739	1-E 3	202-9223	559	1-D 9	205-8790	1259	1-G 7
2H-5549	475	1-D 1	200-4339	759	1-E 5	202-9223	561	1-D 10	205-9961	693	1-D 23
2H-5549	485	1-D 2	200-4341	735	1-E 3	202-9223	563	1-D 10	205-9961	695	1-D 23
2J-2152	497	1-D 3	200-4343	743	1-E 4	203-0128	201	1-B 22	205-9962	693	1-D 23
2J-2152	499	1-D 3	200-4351	737	1-E 3	203-0128	205	1-B 22	205-9962	695	1-D 23
2J-2152	501	1-D 4	200-4351	773	1-E 7	203-0189	787	1-E 8	206-0578	1105	1-F 16
2J-2152	503	1-D 4	200-4369	833	1-E 13	203-0189	789	1-E 8	206-0579	1107	1-F 16
2K-1381	455	1-C 23	200-4372	735	1-E 3	203-0189	791	1-E 9	206-0580	1107	1-F 16
2K-1381	465	1-C 24	200-4374	751	1-E 5	203-0190	787	1-E 8	206-0581	1105	1-F 16
2K-1381	475	1-D 1	200-4374	755	1-E 5	203-0341	791	1-E 9	206-0581	1107	1-F 16
2K-1381	485	1-D 2	200-4375	773	1-E 7	203-1207	793	1-E 9	206-0584	1107	1-F 16
2M-9780	421	1-C 20	200-4392	735	1-E 3	203-1210	793	1-E 9	206-0586	1105	1-F 16
2M-9780	423	1-C 20	200-4400	73	1-B 9	203-1213	789	1-E 8	206-0588	1049	1-F 10
2M-9780	455	1-C 23	200-4400	75	1-B 9	203-1213	793	1-E 9	206-0588	1051	1-F 11
2M-9780	475	1-D 1	200-4400	739	1-E 3	203-2631	427	1-C 20	206-0588	1109	1-F 16
2M-9780	485	1-D 2	200-5027	413	1-C 19	203-2631	429	1-C 20	206-0589	1109	1-F 16
2M-9780	489	1-D 2	200-5027	661	1-D 20	203-2631	431	1-C 21	206-4604	975	1-F 3
2M-9780	491	1-D 3	200-5028	415	1-C 19	203-2631	433	1-C 21	206-4605	975	1-F 3
2P-1692	453	1-C 23	200-5028	665	1-D 20	203-2631	437	1-C 21	206-4613	959	1-F 1
2P-8421	421	1-C 20	200-5029	417	1-C 19	203-2631	441	1-C 22	206-4619	971	1-F 3
2S-4078	461	1-C 24	200-5029	659	1-D 19	203-2631	443	1-C 22	206-4631	969	1-F 2
2S-4078	471	1-D 1	200-5030	419	1-C 19	203-2631	445	1-C 22	206-4633	959	1-F 1
2S-4078	481	1-D 2	200-5030	663	1-D 20	203-2631	447	1-C 22	206-4635	975	1-F 3
2S-4078	491	1-D 3	200-6376	321	1-C 10	203-2631	451	1-C 23	206-4719	627	1-D 16
2S-4663	513	1-D 5	200-8750	969	1-F 2	203-2631	527	1-D 6	206-4720	629	1-D 16
2S-5835	513	1-D 5	200-8772	949	1-E 24	203-2631	533	1-D 7	206-6397	77	1-B 9
2Y-7489	455	1-C 23	200-8772	951	1-F 1	203-2631	539	1-D 7	206-6397	79	1-B 9
2Y-7489	465	1-C 24	200-8772	975	1-F 3	203-2632	435	1-C 21	206-6397	81	1-B 10
2Y-7489	475	1-D 1	200-8773	975	1-F 3	203-2632	449	1-C 22	206-6397	83	1-B 10
2Y-7489	485	1-D 2	200-8775	971	1-F 3	203-3167	791	1-E 9	206-6397	85	1-B 10
200-1300	183	1-B 20	200-8826	587	1-D 12	203-3168	791	1-E 9	206-6397	87	1-B 10
200-1770	1067	1-F 12	201-0486	273	1-C 5	203-3929	505	1-D 4	206-6397	89	1-B 10
200-1771	1067	1-F 12	201-0487	273	1-C 5	203-3929	507	1-D 4	206-6397	91	1-B 11
200-2841	191	1-B 21	201-1186	1095	1-F 15	203-3929	509	1-D 4	206-6397	131	1-B 15
200-2992	819	1-E 11	201-2440	205	1-B 22	203-6604	1259	1-G 7	206-6987	77	1-B 9
200-2992	821	1-E 12	201-2441	201	1-B 22	203-6965	1095	1-F 15	206-6987	79	1-B 9
200-2992	823	1-E 12	201-2442	201	1-B 22	203-6966	1095	1-F 15	206-6987	81	1-B 10
200-2992	825	1-E 12	201-2442	205	1-B 22	203-7787	1259	1-G 7	206-6987	83	1-B 10
200-2992	841	1-E 14	201-2442	1263	1-G 8	203-9179	593	1-D 13	206-6987	85	1-B 10
200-2992	857	1-E 15	201-4113	1067	1-F 12	203-9183	593	1-D 13	206-6987	87	1-B 10
200-2993	819	1-E 11	201-4114	1067	1-F 12	203-9200	593	1-D 13	206-6987	89	1-B 10
200-2993	821	1-E 12	201-4652	147	1-B 16	203-9200	621	1-D 16	206-6987	91	1-B 11
200-2993	823	1-E 12	201-4653	145	1-B 16	203-9200	623	1-D 16	206-6987	113	1-B 13
200-2993	825	1-E 12	201-4653	147	1-B 16	203-9712	1259	1-G 7	206-7461	1031	1-F 9

INDEX

Part No.	Page	Grid	Part No.	Page	Grid	Part No.	Page	Grid	Part No.	Page	Grid
206-7462	1033	1-F 9	209-0359	599	1-D 13	209-9919	931	1-E 23	210-7507	987	1-F 4
206-7462	1039	1-F 9	209-0359	603	1-D 14	209-9920	931	1-E 23	210-7508	953	1-F 1
206-7463	1033	1-F 9	209-0361	599	1-D 13	209-9936	931	1-E 23	210-7508	955	1-F 1
206-7463	1039	1-F 9	209-0361	603	1-D 14	209-9949	931	1-E 23	210-7508	1019	1-F 7
206-7524	267	1-C 4	209-0364	599	1-D 13	210-0184	837	1-E 13	210-7509	949	1-E 24
206-7565	127	1-B 14	209-0364	603	1-D 14	210-0851	767	1-E 6	210-7509	951	1-F 1
206-8787	317	1-C 9	209-0373	599	1-D 13	210-0851	769	1-E 6	210-7509	1021	1-F 8
206-8787	319	1-C 9	209-0373	603	1-D 14	210-0851	835	1-E 13	210-7510	73	1-B 9
206-8789	315	1-C 9	209-0376	599	1-D 13	210-1503	997	1-F 5	210-7510	731	1-E 3
206-8891	187	1-B 20	209-0376	603	1-D 14	210-1570	1047	1-F 10	210-7511	731	1-E 3
206-8891	195	1-B 21	209-0512	167	1-B 18	210-1570	1055	1-F 11	210-7512	971	1-F 3
207-0511	1107	1-F 16	209-0512	169	1-B 18	210-1570	1057	1-F 11	210-7513	971	1-F 3
207-0516	635	1-D 17	209-0799	625	1-D 16	210-1975	527	1-D 6	210-7514	971	1-F 3
207-0516	637	1-D 17	209-0800	625	1-D 16	210-1975	533	1-D 7	210-7515	971	1-F 3
207-0745	843	1-E 14	209-0801	167	1-B 18	210-1996	167	1-B 18	210-7523	1003	1-F 6
207-1293	1031	1-F 9	209-0802	169	1-B 18	210-2395	815	1-E 11	210-7526	591	1-D 13
207-2021	1065	1-F 12	209-0893	377	1-C 15	210-2395	827	1-E 12	210-7677	837	1-E 13
207-2022	1065	1-F 12	209-0893	383	1-C 16	210-2654	1047	1-F 10	210-8405	457	1-C 23
207-2031	173	1-B 19	209-1366	579	1-D 11	210-2682	625	1-D 16	210-8405	461	1-C 24
207-2031	1065	1-F 12	209-3146	599	1-D 13	210-3258	1095	1-F 15	210-8405	467	1-C 24
207-2036	1185	1-F 24	209-3146	603	1-D 14	210-3292	1095	1-F 15	210-8405	471	1-D 1
207-2036	1187	1-F 24	209-3147	599	1-D 13	210-3930	307	1-C 8	210-8405	477	1-D 1
207-2038	1107	1-F 16	209-3147	603	1-D 14	210-3930	309	1-C 8	210-8405	481	1-D 2
207-5993	457	1-C 23	209-3384	599	1-D 13	210-3931	341	1-C 12	210-8405	487	1-D 2
207-5993	467	1-C 24	209-3384	603	1-D 14	210-3932	309	1-C 8	210-8405	491	1-D 3
207-5993	477	1-D 1	209-3385	599	1-D 13	210-3933	341	1-C 12	210-8406	457	1-C 23
207-5993	487	1-D 2	209-3385	603	1-D 14	210-3933	343	1-C 12	210-8406	461	1-C 24
207-5993	1263	1-G 8	209-3389	135	1-B 15	210-4348	617	1-D 15	210-8406	467	1-C 24
207-5994	493	1-D 3	209-3392	135	1-B 15	210-4349	617	1-D 15	210-8406	471	1-D 1
207-7007	457	1-C 23	209-3414	865	1-E 16	210-4350	75	1-B 9	210-8406	477	1-D 1
207-7007	467	1-C 24	209-3688	725	1-E 2	210-4350	617	1-D 15	210-8406	481	1-D 2
207-7007	477	1-D 1	209-3689	729	1-E 2	210-4351	581	1-D 12	210-8406	487	1-D 2
207-7007	487	1-D 2	209-5019	911	1-E 21	210-4354	259	1-C 3	210-8406	491	1-D 3
207-7554	837	1-E 13	209-5019	933	1-E 23	210-4354	261	1-C 4	210-8519	341	1-C 12
207-8218	423	1-C 20	209-5020	909	1-E 20	210-4357	1205	1-G 2	210-8519	343	1-C 12
207-8227	1209	1-G 2	209-5020	935	1-E 23	210-4358	1205	1-G 2	210-8521	341	1-C 12
208-0090	77	1-B 9	209-5021	729	1-E 2	210-4406	617	1-D 15	210-8521	343	1-C 12
208-0090	79	1-B 9	209-5021	915	1-E 21	210-4407	617	1-D 15	210-8961	307	1-C 8
208-0090	81	1-B 10	209-5021	937	1-E 23	210-4408	617	1-D 15	210-8961	341	1-C 12
208-0090	83	1-B 10	209-5604	1105	1-F 16	210-4411	617	1-D 15	211-0174	573	1-D 11
208-0090	311	1-C 9	209-5604	1107	1-F 16	210-4412	617	1-D 15	211-0174	575	1-D 11
208-0563	991	1-F 5	209-5605	1105	1-F 16	210-4413	599	1-D 13	211-0178	573	1-D 11
208-0564	991	1-F 5	209-5606	1107	1-F 16	210-4413	601	1-D 14	211-0178	575	1-D 11
208-2880	1049	1-F 10	209-5607	1105	1-F 16	210-4414	599	1-D 13	211-0182	577	1-D 11
208-2880	1053	1-F 11	209-5608	1049	1-F 10	210-4414	601	1-D 14	211-0183	577	1-D 11
208-2880	1101	1-F 16	209-5608	1051	1-F 11	210-4415	599	1-D 13	211-0535	839	1-E 13
208-2881	1051	1-F 11	209-5608	1055	1-F 11	210-4415	601	1-D 14	211-1156	995	1-F 5
208-2881	1055	1-F 11	209-5608	1057	1-F 11	210-4416	571	1-D 11	211-1170	453	1-C 23
208-2881	1057	1-F 11	209-5608	1107	1-F 16	210-4418	581	1-D 12	211-1171	377	1-C 15
208-2881	1103	1-F 16	209-6244	997	1-F 5	210-4421	617	1-D 15	211-1171	383	1-C 16
208-3021	75	1-B 9	209-6295	579	1-D 11	210-4464	997	1-F 5	211-1677	307	1-C 8
208-3021	397	1-C 17	209-6434	579	1-D 11	210-5610	747	1-E 4	211-1677	309	1-C 8
208-3022	635	1-D 17	209-6677	843	1-E 14	210-5648	747	1-E 4	211-1850	843	1-E 14
208-3022	637	1-D 17	209-7359	927	1-E 22	210-5649	747	1-E 4	211-2731	421	1-C 20
208-7525	621	1-D 16	209-7497	805	1-E 10	210-5703	767	1-E 6	211-2731	423	1-C 20
208-7698	607	1-D 14	209-7497	917	1-E 21	210-5704	769	1-E 6	211-2885	999	1-F 5
208-7843	739	1-E 3	209-7599	927	1-E 22	210-6063	997	1-F 5	211-3547	843	1-E 14
208-9495	571	1-D 11	209-7709	833	1-E 13	210-7423	175	1-B 19	211-3715	843	1-E 14
208-9496	571	1-D 11	209-8325	849	1-E 14	210-7483	731	1-E 3	211-4410	843	1-E 14
208-9814	745	1-E 4	209-8325	873	1-E 17	210-7489	951	1-F 1	211-8220	309	1-C 8
208-9815	745	1-E 4	209-8326	851	1-E 15	210-7491	1005	1-F 6	211-8220	343	1-C 12
208-9838	747	1-E 4	209-8326	875	1-E 17	210-7495	971	1-F 3	211-8222	343	1-C 12
208-9839	747	1-E 4	209-8430	1047	1-F 10	210-7497	971	1-F 3	211-8276	527	1-D 6
208-9875	841	1-E 14	209-8704	1077	1-F 13	210-7500	971	1-F 3	211-8276	533	1-D 7
208-9875	857	1-E 15	209-8704	1079	1-F 13	210-7501	971	1-F 3	211-8276	539	1-D 7
208-9878	841	1-E 14	209-8704	1081	1-F 14	210-7503	1021	1-F 8	211-8277	413	1-C 19
208-9928	819	1-E 11	209-8704	1083	1-F 14	210-7504	971	1-F 3	211-8277	415	1-C 19
208-9928	821	1-E 12	209-8704	1085	1-F 14	210-7506	1019	1-F 7	211-8277	417	1-C 19
208-9928	823	1-E 12	209-9220	633	1-D 17	210-7507	971	1-F 3	211-8277	419	1-C 19
208-9928	825	1-E 12	209-9222	633	1-D 17	210-7507	973	1-F 3	211-8277	495	1-D 3
209-0094	167	1-B 18	209-9231	591	1-D 13	210-7507	977	1-F 3	211-8280	457	1-C 23
209-0095	169	1-B 18	209-9232	591	1-D 13	210-7507	979	1-F 3	211-8280	461	1-C 24
209-0141	179	1-B 19	209-9680	927	1-E 22	210-7507	981	1-F 4	211-8280	467	1-C 24
209-0141	181	1-B 20	209-9680	1263	1-G 8	210-7507	983	1-F 4	211-8280	471	1-D 1
209-0141	837	1-E 13	209-9800	997	1-F 5	210-7507	985	1-F 4	211-8280	477	1-D 1

Part No.	Page	Grid	Part No.	Page	Grid	Part No.	Page	Grid	Part No.	Page	Grid
211-8280	481	1-D 2	214-1118	1095	1-F 15	216-6425	603	1-D 14	216-6988	935	1-E 23
211-8280	487	1-D 2	214-3504	349	1-C 12	216-6425	605	1-D 14	216-6988	937	1-E 23
211-8280	491	1-D 3	214-4667	1095	1-F 15	216-6426	603	1-D 14	216-6990	929	1-E 22
211-8315	843	1-E 14	214-9064	631	1-D 17	216-6426	605	1-D 14	216-6990	933	1-E 23
212-3281	167	1-B 18	214-9201	883	1-E 18	216-6429	601	1-D 14	216-6990	935	1-E 23
212-3597	93	1-B 11	214-9202	883	1-E 18	216-6429	605	1-D 14	216-6990	937	1-E 23
212-3601	833	1-E 13	214-9204	885	1-E 18	216-6430	603	1-D 14	216-6991	929	1-E 22
212-3602	99	1-B 11	214-9205	885	1-E 18	216-6430	605	1-D 14	216-6991	931	1-E 23
212-3811	179	1-B 19	214-9206	885	1-E 18	216-6971	929	1-E 22	216-6991	933	1-E 23
212-3811	181	1-B 20	214-9207	885	1-E 18	216-6971	933	1-E 23	216-6991	935	1-E 23
212-3813	179	1-B 19	214-9379	883	1-E 18	216-6971	935	1-E 23	216-6991	937	1-E 23
212-3813	181	1-B 20	214-9379	885	1-E 18	216-6971	937	1-E 23	216-6992	929	1-E 22
212-3814	179	1-B 19	214-9379	939	1-E 23	216-6972	771	1-E 7	216-6992	933	1-E 23
212-3814	181	1-B 20	215-1802	233	1-C 1	216-6972	929	1-E 22	216-6992	935	1-E 23
212-3815	179	1-B 19	215-1807	235	1-C 1	216-6972	933	1-E 23	216-6992	937	1-E 23
212-3815	181	1-B 20	215-1808	237	1-C 1	216-6972	935	1-E 23	216-7010	929	1-E 22
212-3839	93	1-B 11	215-1809	239	1-C 1	216-6972	937	1-E 23	216-7010	933	1-E 23
212-4300	169	1-B 18	215-7331	635	1-D 17	216-6973	929	1-E 22	216-7010	935	1-E 23
212-4444	77	1-B 9	215-7331	637	1-D 17	216-6973	933	1-E 23	216-7010	937	1-E 23
212-4444	79	1-B 9	215-7335	635	1-D 17	216-6973	935	1-E 23	216-7035	929	1-E 22
212-4444	81	1-B 10	215-7335	637	1-D 17	216-6973	937	1-E 23	216-7035	933	1-E 23
212-4444	83	1-B 10	215-7336	635	1-D 17	216-6974	929	1-E 22	216-7035	935	1-E 23
212-4444	163	1-B 18	215-7353	637	1-D 17	216-6974	933	1-E 23	216-7035	937	1-E 23
212-4445	163	1-B 18	215-7684	259	1-C 3	216-6974	935	1-E 23	216-7115	929	1-E 22
212-6998	353	1-C 13	215-7684	261	1-C 4	216-6974	937	1-E 23	216-7115	933	1-E 23
212-7187	131	1-B 15	215-7687	259	1-C 3	216-6975	929	1-E 22	216-7404	935	1-E 23
212-9996	573	1-D 11	215-7687	261	1-C 4	216-6975	933	1-E 23	216-7404	937	1-E 23
212-9998	573	1-D 11	215-8050	93	1-B 11	216-6975	935	1-E 23	216-7694	1087	1-F 14
213-2481	589	1-D 12	215-8051	93	1-B 11	216-6975	937	1-E 23	216-7835	339	1-C 11
213-2500	589	1-D 12	215-8051	99	1-B 11	216-6976	929	1-E 22	216-7836	339	1-C 11
213-2501	589	1-D 12	215-8051	133	1-B 15	216-6976	933	1-E 23	216-7837	339	1-C 11
213-2502	589	1-D 12	215-8051	145	1-B 16	216-6976	935	1-E 23	216-7839	339	1-C 11
213-2503	589	1-D 12	215-8052	93	1-B 11	216-6976	937	1-E 23	216-7841	339	1-C 11
213-2504	589	1-D 12	215-8054	93	1-B 11	216-6977	929	1-E 22	216-8188	931	1-E 23
213-2505	589	1-D 12	215-8055	93	1-B 11	216-6977	931	1-E 23	216-8277	353	1-C 13
213-2506	589	1-D 12	215-8055	97	1-B 11	216-6977	933	1-E 23	216-8715	497	1-D 3
213-2589	93	1-B 11	215-8055	101	1-B 12	216-6977	935	1-E 23	216-8715	499	1-D 3
213-2589	175	1-B 19	215-8055	103	1-B 12	216-6977	937	1-E 23	216-8715	501	1-D 4
213-3269	457	1-C 23	215-8364	615	1-D 15	216-6978	929	1-E 22	216-8715	503	1-D 4
213-3269	461	1-C 24	215-9109	267	1-C 4	216-6978	933	1-E 23	216-8860	321	1-C 10
213-3269	467	1-C 24	215-9580	637	1-D 17	216-6978	935	1-E 23	216-9213	527	1-D 6
213-3269	471	1-D 1	215-9809	259	1-C 3	216-6978	937	1-E 23	216-9213	533	1-D 7
213-3269	477	1-D 1	215-9809	261	1-C 4	216-6979	929	1-E 22	216-9213	539	1-D 7
213-3269	481	1-D 2	216-0614	213	1-B 23	216-6979	933	1-E 23	216-9823	65	1-B 8
213-3269	487	1-D 2	216-0614	215	1-B 23	216-6979	935	1-E 23	216-9823	67	1-B 8
213-3269	491	1-D 3	216-0614	231	1-C 1	216-6979	937	1-E 23	216-9823	69	1-B 8
213-3270	459	1-C 23	216-0658	209	1-B 22	216-6980	929	1-E 22	216-9823	71	1-B 9
213-3270	461	1-C 24	216-0658	227	1-B 24	216-6980	931	1-E 23	216-9823	271	1-C 5
213-3270	469	1-C 24	216-0658	229	1-B 24	216-6980	933	1-E 23	217-2214	1121	1-F 18
213-3270	471	1-D 1	216-0806	267	1-C 4	216-6980	935	1-E 23	217-2214	1123	1-F 18
213-3270	479	1-D 1	216-0852	213	1-B 23	216-6980	937	1-E 23	217-2214	1125	1-F 18
213-3270	481	1-D 2	216-0874	215	1-B 23	216-6980	1263	1-G 8	217-3441	1031	1-F 9
213-3270	489	1-D 2	216-0887	267	1-C 4	216-6981	929	1-E 22	217-3442	1031	1-F 9
213-3270	491	1-D 3	216-2883	149	1-B 16	216-6981	931	1-E 23	217-3443	1031	1-F 9
213-4902	573	1-D 11	216-3028	357	1-C 13	216-6981	933	1-E 23	217-3444	1031	1-F 9
213-4902	575	1-D 11	216-3028	361	1-C 14	216-6981	935	1-E 23	217-3513	1095	1-F 15
213-6190	459	1-C 23	216-3458	927	1-E 22	216-6981	937	1-E 23	217-3514	1095	1-F 15
213-6190	469	1-C 24	216-3461	927	1-E 22	216-6983	929	1-E 22	217-3555	523	1-D 6
213-6190	479	1-D 1	216-3462	927	1-E 22	216-6983	933	1-E 23	217-3556	527	1-D 6
213-6190	489	1-D 2	216-3475	927	1-E 22	216-6983	935	1-E 23	217-3556	529	1-D 6
213-6191	461	1-C 24	216-3478	927	1-E 22	216-6983	937	1-E 23	217-3556	533	1-D 7
213-6191	471	1-D 1	216-3479	927	1-E 22	216-6984	929	1-E 22	217-3556	535	1-D 7
213-6191	481	1-D 2	216-3480	927	1-E 22	216-6984	933	1-E 23	217-3556	539	1-D 7
213-6191	491	1-D 3	216-3481	927	1-E 22	216-6984	935	1-E 23	217-3557	523	1-D 6
213-7061	989	1-F 4	216-3569	927	1-E 22	216-6984	937	1-E 23	217-3557	529	1-D 6
213-7061	991	1-F 5	216-3570	927	1-E 22	216-6986	929	1-E 22	217-3557	535	1-D 7
213-7062	989	1-F 4	216-4353	267	1-C 4	216-6986	933	1-E 23	217-3557	541	1-D 8
213-7062	991	1-F 5	216-5343	453	1-C 23	216-6986	935	1-E 23	217-4156	849	1-E 14
213-9315	77	1-B 9	216-5343	529	1-D 6	216-6986	937	1-E 23	217-4157	849	1-E 14
213-9315	79	1-B 9	216-5343	535	1-D 7	216-6987	929	1-E 22	217-5924	179	1-B 19
213-9315	81	1-B 10	216-5343	541	1-D 8	216-6987	933	1-E 23	217-5924	181	1-B 20
213-9315	83	1-B 10	216-5343	543	1-D 8	216-6987	935	1-E 23	217-7314	505	1-D 4
213-9315	179	1-B 19	216-5343	545	1-D 8	216-6987	937	1-E 23	217-7365	843	1-E 14
214-0041	179	1-B 19	216-5343	1263	1-G 8	216-6988	929	1-E 22	217-8425	497	1-D 3
214-0042	179	1-B 19	216-6285	617	1-D 15	216-6988	933	1-E 23	217-8425	499	1-D 3

INDEX

Part No.	Page	Grid	Part No.	Page	Grid	Part No.	Page	Grid	Part No.	Page	Grid
217-8425	501	1-D 4	221-1230	121	1-B 14	223-6530	837	1-E 13	228-4643	143	1-B 16
217-8425	503	1-D 4	221-1230	123	1-B 14	224-1398	849	1-E 14	228-7494	741	1-E 4
217-9673	147	1-B 16	221-1230	125	1-B 14	224-1399	863	1-E 16	229-0888	209	1-B 22
217-9779	353	1-C 13	221-1233	121	1-B 14	224-2189	307	1-C 8	229-0891	211	1-B 23
217-9779	775	1-E 7	221-1233	123	1-B 14	224-3917	1049	1-F 10	229-0891	227	1-B 24
217-9780	359	1-C 13	221-1233	125	1-B 14	224-3917	1051	1-F 11	229-8893	129	1-B 14
217-9780	361	1-C 14	221-1233	1263	1-G 8	224-3917	1053	1-F 11	229-8895	129	1-B 14
217-9780	777	1-E 7	221-1775	1099	1-F 15	224-3917	1055	1-F 11	229-8898	129	1-B 14
218-2771	203	1-B 22	221-1776	177	1-B 19	224-3917	1057	1-F 11	229-8899	127	1-B 14
218-2771	205	1-B 22	221-2548	109	1-B 12	224-3917	1177	1-F 23	229-8899	129	1-B 14
218-2803	833	1-E 13	221-2548	111	1-B 13	224-3917	1179	1-F 23	230-9563	843	1-E 14
218-2805	835	1-E 13	221-2549	107	1-B 12	224-3945	837	1-E 13	230-9563	1263	1-G 8
218-2806	833	1-E 13	221-2642	1119	1-F 17	224-3946	837	1-E 13	231-5219	137	1-B 15
218-2806	835	1-E 13	221-2762	127	1-B 14	224-5868	499	1-D 3	231-6106	599	1-D 13
218-2807	93	1-B 11	221-2763	127	1-B 14	224-5869	501	1-D 4	231-6106	603	1-D 14
218-2808	99	1-B 11	221-5334	457	1-C 23	224-5869	503	1-D 4	232-0345	421	1-C 20
218-2809	101	1-B 12	221-5334	461	1-C 24	224-5870	499	1-D 3	232-0345	423	1-C 20
218-2886	149	1-B 16	221-5334	467	1-C 24	224-5870	501	1-D 4	232-0838	741	1-E 4
218-2888	149	1-B 16	221-5334	471	1-D 1	224-5870	503	1-D 4	232-0869	1119	1-F 17
218-2889	149	1-B 16	221-5334	477	1-D 1	224-5884	223	1-B 24	232-0879	335	1-C 11
219-4775	321	1-C 10	221-5334	481	1-D 2	224-5884	665	1-D 20	232-1774	441	1-C 22
219-4779	1119	1-F 17	221-5334	487	1-D 2	224-5884	1011	1-F 7	232-1774	443	1-C 22
219-4796	1119	1-F 17	221-5334	491	1-D 3	224-6641	591	1-D 13	232-1774	445	1-C 22
219-6551	837	1-E 13	221-5389	1119	1-F 17	224-6641	817	1-E 11	232-1774	447	1-C 22
219-7208	851	1-E 15	221-5433	1065	1-F 12	224-7075	179	1-B 19	232-1774	449	1-C 22
219-7209	851	1-E 15	221-7640	613	1-D 15	224-8603	1011	1-F 7	232-1774	451	1-C 23
219-7563	629	1-D 16	221-8534	75	1-B 9	224-9662	949	1-E 24	232-1774	511	1-D 5
219-7564	625	1-D 16	221-8534	623	1-D 16	224-9662	953	1-F 1	233-6580	1119	1-F 17
219-7565	625	1-D 16	221-8535	623	1-D 16	224-9662	955	1-F 1	233-7373	817	1-E 11
219-7565	629	1-D 16	221-8536	623	1-D 16	224-9662	1007	1-F 6	233-8642	839	1-E 13
219-7566	625	1-D 16	221-8537	623	1-D 16	225-0175	837	1-E 13	235-4672	85	1-B 10
219-7566	629	1-D 16	221-9201	267	1-C 4	225-0176	837	1-E 13	235-4672	87	1-B 10
219-8629	159	1-B 17	222-1887	613	1-D 15	225-1406	1095	1-F 15	235-4673	89	1-B 10
219-8629	161	1-B 18	222-1903	461	1-C 24	225-6958	455	1-C 23	235-4673	91	1-B 11
219-8630	159	1-B 17	222-1903	471	1-D 1	225-6958	465	1-C 24	235-6166	457	1-C 23
219-8630	161	1-B 18	222-1903	481	1-D 2	225-6958	507	1-D 4	235-6166	467	1-C 24
219-8631	159	1-B 17	222-1903	491	1-D 3	225-8514	617	1-D 15	235-6166	477	1-D 1
219-8632	161	1-B 18	222-1904	459	1-C 23	225-8861	621	1-D 16	235-6166	487	1-D 2
219-8787	837	1-E 13	222-1904	469	1-C 24	226-0919	631	1-D 17	239-9822	461	1-C 24
219-8801	999	1-F 5	222-1904	479	1-D 1	226-0921	631	1-D 17	239-9822	471	1-D 1
219-9652	747	1-E 4	222-1904	489	1-D 2	226-1882	837	1-E 13	239-9822	481	1-D 2
219-9656	1127	1-F 18	222-2280	1211	1-G 3	226-4324	375	1-C 15	239-9822	491	1-D 3
220-2329	1155	1-F 21	222-2281	1231	1-G 5	226-4324	381	1-C 16	240-5529	429	1-C 20
220-2329	1159	1-F 21	222-2457	367	1-C 14	226-4325	375	1-C 15	240-5529	445	1-C 22
220-2333	1159	1-F 21	222-2457	369	1-C 14	226-4325	381	1-C 16	241-6205	513	1-D 5
220-2355	711	1-E 1	222-4774	1095	1-F 15	226-4754	373	1-C 15	242-0962	473	1-D 1
220-2356	65	1-B 8	222-7965	65	1-B 8	226-4754	379	1-C 15	242-0962	485	1-D 2
220-2356	67	1-B 8	222-7965	67	1-B 8	226-7570	145	1-B 16	242-0962	509	1-D 4
220-2356	69	1-B 8	222-7965	69	1-B 8	226-7570	147	1-B 16	242-5086	457	1-C 23
220-2356	71	1-B 9	222-7965	71	1-B 9	227-4312	1177	1-F 23	242-5086	461	1-C 24
220-2356	713	1-E 1	222-7965	615	1-D 15	227-4313	1177	1-F 23	242-5086	467	1-C 24
220-2357	707	1-D 24	222-9033	605	1-D 14	227-5269	839	1-E 13	242-5086	471	1-D 1
220-2358	65	1-B 8	222-9156	269	1-C 4	227-5270	839	1-E 13	242-5086	477	1-D 1
220-2358	67	1-B 8	222-9854	815	1-E 11	227-6744	827	1-E 12	242-5086	481	1-D 2
220-2358	69	1-B 8	222-9855	815	1-E 11	227-6745	827	1-E 12	242-5086	487	1-D 2
220-2358	71	1-B 9	223-0623	461	1-C 24	227-8224	143	1-B 16	242-5086	491	1-D 3
220-2358	709	1-D 24	223-0623	471	1-D 1	227-8726	921	1-E 22	244-3699	479	1-D 1
220-2730	621	1-D 16	223-0623	481	1-D 2	227-8727	921	1-E 22	244-3699	489	1-D 2
220-3664	747	1-E 4	223-0623	491	1-D 3	227-8830	913	1-E 21	252-2226	459	1-C 23
220-3810	403	1-C 18	223-0687	197	1-B 21	227-8830	917	1-E 21	252-2226	469	1-C 24
220-4138	383	1-C 16	223-0687	199	1-B 21	227-8830	919	1-E 21	252-2227	479	1-D 1
220-5736	207	1-B 22	223-0687	203	1-B 22	227-8830	921	1-E 22	252-2227	489	1-D 2
220-5736	1263	1-G 8	223-0687	205	1-B 22	227-9327	455	1-C 23	256-0176	227	1-B 24
220-8642	179	1-B 19	223-0701	117	1-B 13	227-9327	463	1-C 24	256-0176	377	1-C 15
220-8642	181	1-B 20	223-1637	465	1-C 24	227-9327	473	1-D 1	256-0184	209	1-B 22
221-0331	741	1-E 4	223-1637	475	1-D 1	227-9327	483	1-D 2	256-0187	231	1-C 1
221-0691	459	1-C 23	223-1637	485	1-D 2	227-9744	1159	1-F 21	260-9471	497	1-D 3
221-0691	469	1-C 24	223-2480	697	1-D 23	228-2777	1191	1-G 1	260-9471	499	1-D 3
221-0691	479	1-D 1	223-2480	699	1-D 23	228-4278	453	1-C 23	260-9471	501	1-D 4
221-0691	489	1-D 2	223-3273	697	1-D 23	228-4631	141	1-B 16	260-9471	503	1-D 4
221-0807	129	1-B 14	223-3273	699	1-D 23	228-4632	143	1-B 16	261-2719	497	1-D 3
221-0808	107	1-B 12	223-4304	677	1-D 21	228-4633	143	1-B 16	261-2719	499	1-D 3
221-0808	109	1-B 12	223-4941	1031	1-F 9	228-4642	141	1-B 16	261-2719	501	1-D 4
221-0808	111	1-B 13	223-5887	597	1-D 13	228-4642	143	1-B 16	261-2719	503	1-D 4
221-1229	129	1-B 14	223-5887	603	1-D 14	228-4643	141	1-B 16	266-0216	497	1-D 3

Part No.	Page	Grid	Part No.	Page	Grid	Part No.	Page	Grid	Part No.	Page	Grid
266-0216	499	1-D 3	3T-3434	317	1-C 9	4M-1831	315	1-C 9	400035X1	695	1-D 23
266-0216	501	1-D 4	3T-3434	319	1-C 9	4M-1831	317	1-C 9	400035X1	1019	1-F 7
266-0216	503	1-D 4	4B-9782	455	1-C 23	4M-1831	319	1-C 9	400036X1	969	1-F 2
267-8459	383	1-C 16	4B-9782	463	1-C 24	4M-2381	513	1-D 5	400039X1	95	1-B 11
3B-4501	355	1-C 13	4B-9782	473	1-D 1	4M-5905	513	1-D 5	400039X1	101	1-B 12
3B-4501	357	1-C 13	4B-9782	483	1-D 2	4N-0952	479	1-D 1	400039X1	121	1-B 14
3B-8485	973	1-F 3	4B-9783	465	1-C 24	4P-7428	453	1-C 23	400039X1	123	1-B 14
3C-6969	355	1-C 13	4B-9783	475	1-D 1	4P-7581	355	1-C 13	400039X1	125	1-B 14
3C-6969	357	1-C 13	4B-9783	485	1-D 2	4P-7581	453	1-C 23	400039X1	145	1-B 16
3D-2824	421	1-C 20	4B-9880	513	1-D 5	4P-7581	529	1-D 6	400039X1	151	1-B 17
3D-8317	513	1-D 5	4C-4183	1261	1-G 8	4P-7581	535	1-D 7	400039X1	153	1-B 17
3E-3377	353	1-C 13	4C-4184	1261	1-G 8	4P-7581	541	1-D 8	400039X1	179	1-B 19
3E-4353	527	1-D 6	4C-4190	1261	1-G 8	4P-8134	355	1-C 13	400039X1	181	1-B 20
3E-4353	533	1-D 7	4C-4191	1261	1-G 8	4P-8134	357	1-C 13	400039X1	183	1-B 20
3E-4353	539	1-D 7	4C-4192	1261	1-G 8	4P-8134	453	1-C 23	400039X1	197	1-B 21
3E-5464	1031	1-F 9	4C-4197	1261	1-G 8	4T-2201	439	1-C 21	400039X1	199	1-B 21
3E-6284	353	1-C 13	4C-4198	1261	1-G 8	4T-4200	525	1-D 6	400039X1	203	1-B 22
3E-7775	315	1-C 9	4C-4199	1261	1-G 8	4T-4200	531	1-D 7	400039X1	205	1-B 22
3E-7775	319	1-C 9	4C-4200	1261	1-G 8	4T-4200	537	1-D 7	400039X1	209	1-B 22
3F-0379	315	1-C 9	4C-4205	1261	1-G 8	400000X1	863	1-E 16	400039X1	211	1-B 23
3F-0379	317	1-C 9	4C-4206	1261	1-G 8	400001X1	209	1-B 22	400039X1	213	1-B 23
3F-0379	319	1-C 9	4C-4207	1261	1-G 8	400001X1	377	1-C 15	400039X1	215	1-B 23
3F-0957	421	1-C 20	4C-4211	1261	1-G 8	400001X1	383	1-C 16	400039X1	267	1-C 4
3H-0703	449	1-C 22	4C-5843	1261	1-G 8	400002X1	683	1-D 22	400039X1	357	1-C 13
3J-1907	421	1-C 20	4C-6122	1261	1-G 8	400004X1	171	1-B 19	400039X1	361	1-C 14
3J-1907	423	1-C 20	4C-6126	1261	1-G 8	400004X1	1073	1-F 13	400039X1	375	1-C 15
3J-1907	455	1-C 23	4C-6127	1261	1-G 8	400005X1	281	1-C 6	400039X1	381	1-C 16
3J-1907	465	1-C 24	4C-6129	1261	1-G 8	400005X1	283	1-C 6	400039X1	385	1-C 16
3J-1907	475	1-D 1	4C-6133	1261	1-G 8	400006X1	351	1-C 13	400039X1	579	1-D 11
3J-1907	485	1-D 2	4C-6134	1261	1-G 8	400006X1	371	1-C 15	400039X1	591	1-D 13
3J-1907	513	1-D 5	4D-7889	427	1-C 20	400008X1	697	1-D 23	400039X1	621	1-D 16
3J-1907	529	1-D 6	4D-7889	429	1-C 20	400008X1	699	1-D 23	400039X1	625	1-D 16
3J-1907	535	1-D 7	4D-7889	431	1-C 21	400009X1	683	1-D 22	400039X1	629	1-D 16
3J-1907	541	1-D 8	4D-7889	433	1-C 21	400011X1	761	1-E 6	400039X1	735	1-E 3
3J-1907	543	1-D 8	4D-7889	437	1-C 21	400013X1	599	1-D 13	400039X1	739	1-E 3
3J-1907	545	1-D 8	4D-7889	441	1-C 22	400013X1	603	1-D 14	400039X1	741	1-E 4
3J-7354	527	1-D 6	4D-7889	443	1-C 22	400014X1	677	1-D 21	400039X1	743	1-E 4
3J-7354	533	1-D 7	4D-7889	445	1-C 22	400015X1	621	1-D 16	400039X1	749	1-E 4
3J-7354	539	1-D 7	4D-7889	447	1-C 22	400017X1	359	1-C 13	400039X1	753	1-E 5
3K-0360	421	1-C 20	4D-7889	451	1-C 23	400018X1	177	1-B 19	400039X1	757	1-E 5
3K-0360	423	1-C 20	4D-7889	525	1-D 6	400018X1	1023	1-F 8	400039X1	759	1-E 5
3K-0360	459	1-C 23	4D-7889	531	1-D 7	400018X1	1025	1-F 8	400039X1	819	1-E 11
3K-0360	469	1-C 24	4D-7889	537	1-D 7	400019X1	131	1-B 15	400039X1	821	1-E 12
3K-0360	479	1-D 1	4E-2229	357	1-C 13	400019X1	135	1-B 15	400039X1	823	1-E 12
3K-0360	489	1-D 2	4E-2250	211	1-B 23	400021X1	259	1-C 3	400039X1	825	1-E 12
3K-0360	513	1-D 5	4F-4097	421	1-C 20	400021X1	261	1-C 4	400039X1	839	1-E 13
3K-0360	735	1-E 3	4F-4097	423	1-C 20	400022X1	1023	1-F 8	400039X1	841	1-E 14
3K-0715	421	1-C 20	4H-0408	759	1-E 5	400022X1	1025	1-F 8	400039X1	843	1-E 14
3K-0715	423	1-C 20	4H-6507	455	1-C 23	400022X1	1027	1-F 8	400039X1	849	1-E 14
3P-3441	459	1-C 23	4H-6507	463	1-C 24	400022X1	1029	1-F 8	400039X1	851	1-E 15
3P-3441	461	1-C 24	4H-6507	473	1-D 1	400022X1	1037	1-F 9	400039X1	857	1-E 15
3P-3441	469	1-C 24	4H-6507	483	1-D 2	400022X1	1043	1-F 10	400039X1	969	1-F 2
3P-3441	471	1-D 1	4J-5140	461	1-C 24	400022X1	1091	1-F 15	400039X1	973	1-F 3
3P-3441	479	1-D 1	4J-5140	471	1-D 1	400022X1	1093	1-F 15	400039X1	975	1-F 3
3P-3441	481	1-D 2	4J-5140	481	1-D 2	400023X1	679	1-D 21	400039X1	989	1-F 4
3P-3441	489	1-D 2	4J-5140	491	1-D 3	400023X1	681	1-D 22	400039X1	997	1-F 5
3P-3441	491	1-D 3	4J-5140	529	1-D 6	400024X1	573	1-D 11	400039X1	1017	1-F 7
3S-2093	357	1-C 13	4J-5140	535	1-D 7	400024X1	575	1-D 11	400039X1	1073	1-F 13
3S-2093	453	1-C 23	4J-5140	541	1-D 8	400024X1	749	1-E 4	400039X1	1099	1-F 15
3S-2708	435	1-C 21	4J-5477	527	1-D 6	400025X1	973	1-F 3	400039X1	1109	1-F 16
3S-2708	437	1-C 21	4J-5477	533	1-D 7	400026X1	957	1-F 1	400039X1	1177	1-F 23
3S-2708	449	1-C 22	4J-5477	539	1-D 7	400027X1	683	1-D 22	400040X1	95	1-B 11
3S-2708	451	1-C 23	4J-8996	421	1-C 20	400028X1	119	1-B 13	400040X1	133	1-B 15
3S-2708	459	1-C 23	4J-8996	423	1-C 20	400028X1	741	1-E 4	400040X1	135	1-B 15
3S-2708	461	1-C 24	4K-3892	457	1-C 23	400029X1	625	1-D 16	400040X1	145	1-B 16
3S-2708	469	1-C 24	4K-3892	461	1-C 24	400031X1	565	1-D 10	400040X1	147	1-B 16
3S-2708	471	1-D 1	4K-3892	467	1-C 24	400031X1	567	1-D 10	400040X1	179	1-B 19
3S-2708	479	1-D 1	4K-3892	471	1-D 1	400031X1	569	1-D 10	400040X1	181	1-B 20
3S-2708	481	1-D 2	4K-3892	477	1-D 1	400031X1	589	1-D 12	400040X1	197	1-B 21
3S-2708	489	1-D 2	4K-3892	481	1-D 2	400032X1	697	1-D 23	400040X1	199	1-B 21
3S-2708	491	1-D 3	4K-3892	487	1-D 2	400032X1	699	1-D 23	400040X1	203	1-B 22
3T-3422	315	1-C 9	4K-3892	491	1-D 3	400033X1	989	1-F 4	400040X1	205	1-B 22
3T-3422	317	1-C 9	4K-9429	635	1-D 17	400035X1	683	1-D 22	400040X1	307	1-C 8
3T-3422	319	1-C 9	4K-9429	637	1-D 17	400035X1	685	1-D 22	400040X1	309	1-C 8
3T-3434	315	1-C 9	4M-0189	493	1-D 3	400035X1	693	1-D 23	400040X1	385	1-C 16

INDEX

Part No.	Page	Grid
400040X1	579	1-D 11
400040X1	629	1-D 16
400040X1	749	1-E 4
400040X1	759	1-E 5
400040X1	837	1-E 13
400040X1	843	1-E 14
400040X1	855	1-E 15
400040X1	973	1-F 3
400040X1	991	1-F 5
400040X1	995	1-F 5
400040X1	997	1-F 5
400040X1	1007	1-F 6
400040X1	1073	1-F 13
400040X1	1099	1-F 15
400040X1	1121	1-F 18
400040X1	1123	1-F 18
400040X1	1189	1-F 24
400040X1	1191	1-G 1
400040X1	1193	1-G 1
400041X1	303	1-C 8
400041X1	305	1-C 8
400041X1	385	1-C 16
400041X1	407	1-C 18
400041X1	409	1-C 18
400041X1	555	1-D 9
400041X1	557	1-D 9
400041X1	559	1-D 9
400041X1	561	1-D 10
400041X1	563	1-D 10
400041X1	625	1-D 16
400041X1	631	1-D 17
400041X1	635	1-D 17
400041X1	637	1-D 17
400041X1	839	1-E 13
400041X1	973	1-F 3
400041X1	975	1-F 3
400042X1	1121	1-F 18
400042X1	1123	1-F 18
400044X1	141	1-B 16
400044X1	327	1-C 10
400044X1	623	1-D 16
400044X1	625	1-D 16
400044X1	737	1-E 3
400044X1	849	1-E 14
400044X1	1099	1-F 15
400046X1	197	1-B 21
400046X1	199	1-B 21
400046X1	203	1-B 22
400046X1	205	1-B 22
400046X1	847	1-E 14
400046X1	853	1-E 15
400046X1	863	1-E 16
400046X1	865	1-E 16
400047X1	375	1-C 15
400047X1	697	1-D 23
400047X1	699	1-D 23
400048X1	1121	1-F 18
400048X1	1123	1-F 18
400049X1	95	1-B 11
400049X1	621	1-D 16
400049X1	1023	1-F 8
400049X1	1025	1-F 8
400049X1	1027	1-F 8
400049X1	1029	1-F 8
400050X1	107	1-B 12
400050X1	109	1-B 12
400050X1	111	1-B 13
400050X1	127	1-B 14
400050X1	589	1-D 12
400050X1	621	1-D 16
400050X1	625	1-D 16
400050X1	629	1-D 16
400050X1	631	1-D 17
400050X1	633	1-D 17
400050X1	847	1-E 14
400050X1	853	1-E 15
400050X1	861	1-E 16
400050X1	867	1-E 16
400050X1	871	1-E 17
400051X1	621	1-D 16
400051X1	633	1-D 17
400051X1	839	1-E 13
400051X1	863	1-E 16
400051X1	865	1-E 16
400052X1	197	1-B 21
400052X1	199	1-B 21
400052X1	203	1-B 22
400052X1	205	1-B 22
400052X1	593	1-D 13
400052X1	621	1-D 16
400052X1	623	1-D 16
400053X1	149	1-B 16
400053X1	573	1-D 11
400053X1	577	1-D 11
400053X1	581	1-D 12
400053X1	591	1-D 13
400053X1	607	1-D 14
400053X1	625	1-D 16
400053X1	629	1-D 16
400053X1	633	1-D 17
400053X1	705	1-D 24
400053X1	779	1-E 7
400053X1	819	1-E 11
400053X1	821	1-E 12
400053X1	823	1-E 12
400053X1	825	1-E 12
400053X1	839	1-E 13
400053X1	1023	1-F 8
400053X1	1025	1-F 8
400053X1	1027	1-F 8
400053X1	1029	1-F 8
400053X1	1091	1-F 15
400053X1	1093	1-F 15
400053X1	1095	1-F 15
400053X1	1179	1-F 23
400055X1	197	1-B 21
400055X1	199	1-B 21
400055X1	203	1-B 22
400055X1	205	1-B 22
400055X1	385	1-C 16
400055X1	401	1-C 18
400055X1	403	1-C 18
400055X1	683	1-D 22
400055X1	1153	1-F 21
400056X1	167	1-B 18
400056X1	169	1-B 18
400056X1	783	1-E 8
400056X1	785	1-E 8
400056X1	869	1-E 16
400056X1	871	1-E 17
400056X1	973	1-F 3
400056X1	989	1-F 4
400056X1	991	1-F 5
400057X1	195	1-B 21
400057X1	407	1-C 18
400057X1	411	1-C 19
400057X1	585	1-D 12
400057X1	587	1-D 12
400057X1	859	1-E 15
400058X1	95	1-B 11
400058X1	101	1-B 12
400058X1	129	1-B 14
400058X1	133	1-B 15
400058X1	141	1-B 16
400058X1	143	1-B 16
400058X1	145	1-B 16
400058X1	147	1-B 16
400058X1	167	1-B 18
400058X1	169	1-B 18
400058X1	179	1-B 19
400058X1	181	1-B 20
400058X1	183	1-B 20
400058X1	197	1-B 21
400058X1	199	1-B 21
400058X1	203	1-B 22
400058X1	205	1-B 22
400058X1	357	1-C 13
400058X1	361	1-C 14
400058X1	599	1-D 13
400058X1	603	1-D 14
400058X1	617	1-D 15
400058X1	625	1-D 16
400058X1	629	1-D 16
400058X1	631	1-D 17
400058X1	633	1-D 17
400058X1	637	1-D 17
400058X1	667	1-D 20
400058X1	669	1-D 20
400058X1	693	1-D 23
400058X1	695	1-D 23
400058X1	741	1-E 4
400058X1	761	1-E 6
400058X1	839	1-E 13
400058X1	843	1-E 14
400058X1	1059	1-F 11
400058X1	1061	1-F 12
400058X1	1099	1-F 15
400058X1	1121	1-F 18
400058X1	1123	1-F 18
400059X1	175	1-B 19
400059X1	177	1-B 19
400059X1	203	1-B 22
400059X1	205	1-B 22
400059X1	591	1-D 13
400059X1	599	1-D 13
400059X1	603	1-D 14
400059X1	605	1-D 14
400059X1	617	1-D 15
400059X1	629	1-D 16
400059X1	633	1-D 17
400059X1	833	1-E 13
400059X1	847	1-E 14
400059X1	851	1-E 15
400059X1	853	1-E 15
400060X1	127	1-B 14
400060X1	211	1-B 23
400062X1	629	1-D 16
400062X1	859	1-E 15
400063X1	407	1-C 18
400063X1	409	1-C 18
400063X1	551	1-D 9
400063X1	553	1-D 9
400063X1	819	1-E 11
400063X1	821	1-E 12
400063X1	823	1-E 12
400063X1	825	1-E 12
400063X1	839	1-E 13
400063X1	847	1-E 14
400063X1	853	1-E 15
400064X1	139	1-B 15
400064X1	583	1-D 12
400064X1	591	1-D 13
400064X1	629	1-D 16
400064X1	697	1-D 23
400064X1	699	1-D 23
400064X1	761	1-E 6
400064X1	815	1-E 11
400064X1	839	1-E 13
400064X1	847	1-E 14
400064X1	849	1-E 14
400064X1	851	1-E 15
400064X1	853	1-E 15
400064X1	867	1-E 16
400064X1	869	1-E 16
400065X1	1091	1-F 15
400065X1	1093	1-F 15
400066X1	179	1-B 19
400066X1	181	1-B 20
400066X1	629	1-D 16
400066X1	839	1-E 13
400066X1	1121	1-F 18
400066X1	1123	1-F 18
400067X1	565	1-D 10
400067X1	567	1-D 10
400067X1	569	1-D 10
400067X1	629	1-D 16
400067X1	693	1-D 23
400067X1	695	1-D 23
400067X1	1019	1-F 7
400067X1	1021	1-F 8
400068X1	779	1-E 7
400069X1	407	1-C 18
400069X1	409	1-C 18
400070X1	1075	1-F 13
400071X1	1075	1-F 13
400072X1	173	1-B 19
400073X1	1089	1-F 14
400074X1	173	1-B 19
400074X1	1075	1-F 13
400075X1	671	1-D 21
400076X1	359	1-C 13
400076X1	571	1-D 11
400076X1	1097	1-F 15
400077X1	133	1-B 15
400078X1	957	1-F 1
400078X1	959	1-F 1
400078X1	971	1-F 3
400078X1	989	1-F 4
400078X1	991	1-F 5
400079X1	969	1-F 2
400080X1	549	1-D 8
400080X1	555	1-D 9
400080X1	557	1-D 9
400080X1	559	1-D 9
400080X1	561	1-D 10
400080X1	563	1-D 10
400080X1	565	1-D 10
400080X1	567	1-D 10
400080X1	569	1-D 10
400080X1	579	1-D 11
400080X1	671	1-D 21
400080X1	683	1-D 22
400080X1	693	1-D 23
400080X1	695	1-D 23
400080X1	697	1-D 23
400080X1	699	1-D 23
400080X1	749	1-E 4
400080X1	957	1-F 1
400080X1	959	1-F 1
400080X1	989	1-F 4
400080X1	991	1-F 5
400081X1	115	1-B 13
400081X1	117	1-B 13
400081X1	565	1-D 10
400081X1	567	1-D 10
400081X1	569	1-D 10
400081X1	579	1-D 11
400081X1	629	1-D 16
400081X1	683	1-D 22
400081X1	685	1-D 22
400081X1	693	1-D 23
400081X1	695	1-D 23
400081X1	969	1-F 2
400081X1	973	1-F 3
400081X1	1017	1-F 7
400081X1	1019	1-F 7
400081X1	1021	1-F 8
400081X1	1073	1-F 13
400082X1	167	1-B 18
400082X1	169	1-B 18

Part No.	Page	Grid	Part No.	Page	Grid	Part No.	Page	Grid	Part No.	Page	Grid
400082X1	407	1-C 18	400123X1	851	1-E 15	400191X1	671	1-D 21	400227X1	153	1-B 17
400082X1	409	1-C 18	400123X1	853	1-E 15	400191X1	693	1-D 23	400227X1	211	1-B 23
400082X1	579	1-D 11	400124X1	1073	1-F 13	400191X1	695	1-D 23	400227X1	267	1-C 4
400082X1	629	1-D 16	400125X1	1103	1-F 16	400191X1	957	1-F 1	400227X1	357	1-C 13
400082X1	671	1-D 21	400126X1	163	1-B 18	400191X1	959	1-F 1	400227X1	359	1-C 13
400082X1	693	1-D 23	400126X1	165	1-B 18	400191X1	973	1-F 3	400227X1	375	1-C 15
400082X1	695	1-D 23	400127X1	159	1-B 17	400191X1	989	1-F 4	400227X1	377	1-C 15
400082X1	783	1-E 8	400127X1	161	1-B 18	400191X1	991	1-F 5	400227X1	381	1-C 16
400082X1	785	1-E 8	400127X1	1095	1-F 15	400194X1	549	1-D 8	400227X1	385	1-C 16
400082X1	815	1-E 11	400128X1	1045	1-F 10	400194X1	555	1-D 9	400227X1	573	1-D 11
400082X1	947	1-E 24	400129X2	1203	1-G 2	400194X1	557	1-D 9	400227X1	575	1-D 11
400083X1	1259	1-G 7	400130X1	99	1-B 11	400194X1	559	1-D 9	400227X1	671	1-D 21
400084X1	359	1-C 13	400132X1	275	1-C 5	400194X1	561	1-D 10	400227X1	683	1-D 22
400084X1	1067	1-F 12	400132X1	277	1-C 5	400194X1	563	1-D 10	400227X1	753	1-E 5
400084X1	1095	1-F 15	400134X1	579	1-D 11	400194X1	959	1-F 1	400227X1	757	1-E 5
400085X1	1067	1-F 12	400135X1	1257	1-G 7	400197X1	579	1-D 11	400227X1	1059	1-F 11
400085X1	1095	1-F 15	400137X1	1073	1-F 13	400198X1	973	1-F 3	400227X1	1061	1-F 12
400085X1	1177	1-F 23	400138X1	571	1-D 11	400199X1	611	1-D 15	400227X1	1121	1-F 18
400085X1	1179	1-F 23	400139X1	273	1-C 5	400200X1	611	1-D 15	400227X1	1123	1-F 18
400086X1	1171	1-F 23	400140X1	603	1-D 14	400201X1	95	1-B 11	400227X1	1259	1-G 7
400087X1	259	1-C 3	400140X1	605	1-D 14	400202X1	129	1-B 14	400228X1	667	1-D 20
400087X1	261	1-C 4	400142X1	683	1-D 22	400205X1	211	1-B 23	400228X1	669	1-D 20
400088X1	629	1-D 16	400143X1	631	1-D 17	400205X1	845	1-E 14	400229X1	115	1-B 13
400088X1	947	1-E 24	400146X1	107	1-B 12	400205X1	959	1-F 1	400229X1	117	1-B 13
400088X1	1005	1-F 6	400146X1	109	1-B 12	400208X1	213	1-B 23	400230X1	247	1-C 2
400090X1	565	1-D 10	400146X1	111	1-B 13	400208X1	215	1-B 23	400230X1	249	1-C 2
400091X1	551	1-D 9	400149X1	99	1-B 11	400208X1	285	1-C 6	400230X1	251	1-C 3
400092X1	947	1-E 24	400151X1	795	1-E 9	400208X1	287	1-C 6	400232X1	1021	1-F 8
400093X1	947	1-E 24	400152X1	197	1-B 21	400209X1	377	1-C 15	400233X1	197	1-B 21
400095X1	973	1-F 3	400152X1	199	1-B 21	400209X1	381	1-C 16	400233X1	205	1-B 22
400097X1	1015	1-F 7	400152X1	203	1-B 22	400210X1	881	1-E 18	400234X1	579	1-D 11
400098X1	693	1-D 23	400152X1	205	1-B 22	400211X1	251	1-C 3	400234X1	749	1-E 4
400100X1	847	1-E 14	400152X1	265	1-C 4	400211X1	255	1-C 3	400236X1	549	1-D 8
400101X1	867	1-E 16	400152X1	269	1-C 4	400211X1	257	1-C 3	400236X1	555	1-D 9
400101X1	869	1-E 16	400152X1	303	1-C 8	400213X1	551	1-D 9	400236X1	557	1-D 9
400103X1	849	1-E 14	400152X1	305	1-C 8	400213X1	553	1-D 9	400236X1	559	1-D 9
400103X1	851	1-E 15	400152X1	321	1-C 10	400213X1	705	1-D 24	400236X1	561	1-D 10
400104X1	599	1-D 13	400152X1	345	1-C 12	400213X1	1017	1-F 7	400236X1	563	1-D 10
400104X1	603	1-D 14	400152X1	1023	1-F 8	400217X1	865	1-E 16	400236X1	991	1-F 5
400106X1	1179	1-F 23	400152X1	1027	1-F 8	400220X1	787	1-E 8	400238X1	883	1-E 18
400107X1	839	1-E 13	400152X1	1119	1-F 17	400220X1	793	1-E 9	400239X1	101	1-B 12
400108X1	133	1-B 15	400152X1	1121	1-F 18	400220X1	883	1-E 18	400239X1	141	1-B 16
400108X1	135	1-B 15	400152X1	1123	1-F 18	400220X1	885	1-E 18	400239X1	143	1-B 16
400108X1	195	1-B 21	400152X1	1259	1-G 7	400221X1	203	1-B 22	400239X1	145	1-B 16
400108X1	585	1-D 12	400153X1	199	1-B 21	400221X1	205	1-B 22	400239X1	741	1-E 4
400108X1	1101	1-F 16	400153X1	203	1-B 22	400221X1	269	1-C 4	400240X1	179	1-B 19
400109X1	145	1-B 16	400154X1	407	1-C 18	400221X1	599	1-D 13	400240X1	325	1-C 10
400109X1	147	1-B 16	400157X1	147	1-B 16	400221X1	603	1-D 14	400240X1	757	1-E 5
400109X1	845	1-E 14	400160X1	211	1-B 23	400221X1	613	1-D 15	400241X1	175	1-B 19
400109X1	1043	1-F 10	400161X1	1127	1-F 18	400221X1	1037	1-F 9	400241X1	625	1-D 16
400110X1	1065	1-F 12	400162X1	597	1-D 13	400221X1	1043	1-F 10	400241X1	845	1-E 14
400110X1	1077	1-F 13	400162X1	601	1-D 14	400221X1	1095	1-F 15	400242X1	753	1-E 5
400110X1	1081	1-F 14	400171X1	133	1-B 15	400221X1	1177	1-F 23	400242X1	757	1-E 5
400110X1	1177	1-F 23	400172X1	321	1-C 10	400221X1	1191	1-G 1	400244X1	407	1-C 18
400110X1	1179	1-F 23	400173X1	127	1-B 14	400222X1	973	1-F 3	400244X1	409	1-C 18
400111X1	1105	1-F 16	400175X1	135	1-B 15	400225X1	95	1-B 11	400244X1	687	1-D 22
400111X1	1107	1-F 16	400176X1	199	1-B 21	400225X1	121	1-B 14	400244X1	957	1-F 1
400113X1	1179	1-F 23	400176X1	203	1-B 22	400225X1	123	1-B 14	400244X1	973	1-F 3
400114X1	731	1-E 3	400177X1	99	1-B 11	400225X1	125	1-B 14	400244X1	989	1-F 4
400114X1	1193	1-G 1	400179X1	321	1-C 10	400225X1	151	1-B 17	400244X1	991	1-F 5
400115X1	597	1-D 13	400180X1	117	1-B 13	400225X1	153	1-B 17	400245X1	599	1-D 13
400115X1	601	1-D 14	400181X1	115	1-B 13	400225X1	197	1-B 21	400245X1	603	1-D 14
400117X1	743	1-E 4	400182X1	969	1-F 2	400225X1	199	1-B 21	400245X1	715	1-E 1
400117X1	753	1-E 5	400182X1	973	1-F 3	400225X1	203	1-B 22	400245X1	739	1-E 3
400117X1	757	1-E 5	400184X1	1021	1-F 8	400225X1	205	1-B 22	400245X1	1105	1-F 16
400119X1	1121	1-F 18	400185X1	1043	1-F 10	400225X1	617	1-D 15	400245X1	1107	1-F 16
400119X1	1123	1-F 18	400186X1	1075	1-F 13	400225X1	631	1-D 17	400246X1	883	1-E 18
400120X1	1073	1-F 13	400187X1	973	1-F 3	400225X1	731	1-E 3	400246X1	885	1-E 18
400121X1	1073	1-F 13	400188X1	211	1-B 23	400225X1	737	1-E 3	400247X1	135	1-B 15
400122X1	579	1-D 11	400190X1	857	1-E 15	400225X1	909	1-E 20	400249X1	95	1-B 11
400123X1	829	1-E 12	400190X1	1059	1-F 11	400225X1	995	1-F 5	400249X1	101	1-B 12
400123X1	837	1-E 13	400190X1	1061	1-F 12	400226X1	591	1-D 13	400250X1	95	1-B 11
400123X1	839	1-E 13	400191X1	579	1-D 11	400226X1	749	1-E 4	400251X1	359	1-C 13
400123X1	847	1-E 14	400191X1	621	1-D 16	400226X1	997	1-F 5	400251X1	361	1-C 14
400123X1	849	1-E 14	400191X1	631	1-D 17	400227X1	151	1-B 17	400251X1	377	1-C 15

INDEX

Part No.	Page	Grid	Part No.	Page	Grid	Part No.	Page	Grid	Part No.	Page	Grid
400251X1	385	1-C 16	400287X1	309	1-C 8	400289X1	991	1-F 5	400318X1	175	1-B 19
400252X1	107	1-B 12	400287X1	357	1-C 13	400290X1	989	1-F 4	400318X1	177	1-B 19
400252X1	109	1-B 12	400287X1	361	1-C 14	400290X1	991	1-F 5	400318X1	375	1-C 15
400252X1	111	1-B 13	400287X1	375	1-C 15	400290X1	1001	1-F 6	400318X1	377	1-C 15
400254X1	1079	1-F 13	400287X1	381	1-C 16	400291X1	989	1-F 4	400318X1	383	1-C 16
400254X1	1083	1-F 14	400287X1	385	1-C 16	400291X1	991	1-F 5	400318X1	385	1-C 16
400256X1	1075	1-F 13	400287X1	579	1-D 11	400292X1	1037	1-F 9	400318X1	403	1-C 18
400256X1	1091	1-F 15	400287X1	591	1-D 13	400292X1	1043	1-F 10	400318X1	405	1-C 18
400256X1	1093	1-F 15	400287X1	593	1-D 13	400292X1	1193	1-G 1	400318X1	667	1-D 20
400257X1	573	1-D 11	400287X1	599	1-D 13	400293X1	1043	1-F 10	400318X1	669	1-D 20
400257X1	577	1-D 11	400287X1	617	1-D 15	400294X1	1037	1-F 9	400318X1	735	1-E 3
400260X1	671	1-D 21	400287X1	621	1-D 16	400295X1	213	1-B 23	400318X1	741	1-E 4
400261X1	683	1-D 22	400287X1	623	1-D 16	400295X1	349	1-C 12	400318X1	745	1-E 4
400263X1	969	1-F 2	400287X1	625	1-D 16	400295X1	1043	1-F 10	400318X1	747	1-E 4
400265X1	311	1-C 9	400287X1	629	1-D 16	400296X1	1037	1-F 9	400318X1	749	1-E 4
400265X1	313	1-C 9	400287X1	631	1-D 17	400296X1	1043	1-F 10	400318X1	797	1-E 9
400267X1	557	1-D 9	400287X1	633	1-D 17	400297X1	1043	1-F 10	400318X1	799	1-E 9
400267X1	559	1-D 9	400287X1	637	1-D 17	400298X1	1037	1-F 9	400318X1	809	1-E 10
400267X1	561	1-D 10	400287X1	729	1-E 2	400298X1	1043	1-F 10	400318X1	821	1-E 12
400267X1	563	1-D 10	400287X1	731	1-E 3	400299X1	1037	1-F 9	400318X1	827	1-E 12
400268X1	555	1-D 9	400287X1	735	1-E 3	400300X1	203	1-B 22	400318X1	829	1-E 12
400270X1	957	1-F 1	400287X1	737	1-E 3	400300X1	205	1-B 22	400318X1	837	1-E 13
400272X1	693	1-D 23	400287X1	739	1-E 3	400300X1	247	1-C 2	400318X1	841	1-E 14
400272X1	695	1-D 23	400287X1	741	1-E 4	400300X1	249	1-C 2	400318X1	843	1-E 14
400274X1	113	1-B 13	400287X1	743	1-E 4	400300X1	251	1-C 3	400318X1	845	1-E 14
400275X1	617	1-D 15	400287X1	749	1-E 4	400300X1	265	1-C 4	400318X1	855	1-E 15
400276X1	657	1-D 19	400287X1	753	1-E 5	400300X1	321	1-C 10	400318X1	857	1-E 15
400277X1	599	1-D 13	400287X1	757	1-E 5	400300X1	571	1-D 11	400318X1	881	1-E 18
400277X1	603	1-D 14	400287X1	759	1-E 5	400300X1	613	1-D 15	400318X1	909	1-E 20
400277X1	605	1-D 14	400287X1	761	1-E 6	400300X1	973	1-F 3	400318X1	911	1-E 21
400278X1	657	1-D 19	400287X1	775	1-E 7	400300X1	1033	1-F 9	400318X1	915	1-E 21
400280X1	99	1-B 11	400287X1	777	1-E 7	400300X1	1037	1-F 9	400318X1	921	1-E 22
400281X1	99	1-B 11	400287X1	819	1-E 11	400300X1	1039	1-F 9	400318X1	929	1-E 22
400282X1	1191	1-G 1	400287X1	821	1-E 12	400300X1	1043	1-F 10	400318X1	939	1-E 23
400282X1	1193	1-G 1	400287X1	823	1-E 12	400300X1	1095	1-F 15	400319X1	137	1-B 15
400283X1	989	1-F 4	400287X1	825	1-E 12	400300X1	1119	1-F 17	400319X1	741	1-E 4
400283X1	991	1-F 5	400287X1	833	1-E 13	400300X1	1127	1-F 18	400319X1	747	1-E 4
400284X1	989	1-F 4	400287X1	839	1-E 13	400300X1	1153	1-F 21	400319X1	787	1-E 8
400284X1	991	1-F 5	400287X1	841	1-E 14	400300X1	1185	1-F 24	400319X1	789	1-E 8
400285X1	989	1-F 4	400287X1	843	1-E 14	400300X1	1187	1-F 24	400319X1	819	1-E 11
400285X1	991	1-F 5	400287X1	847	1-E 14	400300X1	1191	1-G 1	400319X1	821	1-E 12
400286X1	671	1-D 21	400287X1	849	1-E 14	400301X1	1037	1-F 9	400319X1	823	1-E 12
400286X1	989	1-F 4	400287X1	851	1-E 15	400301X1	1043	1-F 10	400319X1	825	1-E 12
400286X1	991	1-F 5	400287X1	853	1-E 15	400302X1	1037	1-F 9	400319X1	829	1-E 12
400286X1	1259	1-G 7	400287X1	855	1-E 15	400305X1	1037	1-F 9	400319X1	839	1-E 13
400287X1	95	1-B 11	400287X1	857	1-E 15	400305X1	1043	1-F 10	400319X1	849	1-E 14
400287X1	101	1-B 12	400287X1	909	1-E 20	400306X1	1037	1-F 9	400319X1	851	1-E 15
400287X1	121	1-B 14	400287X1	915	1-E 21	400307X1	1037	1-F 9	400319X1	859	1-E 15
400287X1	123	1-B 14	400287X1	969	1-F 2	400307X1	1043	1-F 10	400319X1	885	1-E 18
400287X1	125	1-B 14	400287X1	973	1-F 3	400308X1	1037	1-F 9	400319X1	909	1-E 20
400287X1	133	1-B 15	400287X1	991	1-F 5	400308X1	1043	1-F 10	400319X1	915	1-E 21
400287X1	135	1-B 15	400287X1	995	1-F 5	400309X1	1037	1-F 9	400319X1	931	1-E 23
400287X1	145	1-B 16	400287X1	997	1-F 5	400309X1	1043	1-F 10	400319X1	997	1-F 5
400287X1	147	1-B 16	400287X1	1001	1-F 6	400310X1	173	1-B 19	400319X1	999	1-F 5
400287X1	151	1-B 17	400287X1	1003	1-F 6	400310X1	269	1-C 4	400322X1	93	1-B 11
400287X1	153	1-B 17	400287X1	1007	1-F 6	400310X1	367	1-C 14	400322X1	99	1-B 11
400287X1	163	1-B 18	400287X1	1017	1-F 7	400310X1	369	1-C 14	400322X1	133	1-B 15
400287X1	165	1-B 18	400287X1	1059	1-F 11	400310X1	571	1-D 11	400322X1	135	1-B 15
400287X1	167	1-B 18	400287X1	1061	1-F 12	400310X1	599	1-D 13	400322X1	137	1-B 15
400287X1	169	1-B 18	400287X1	1067	1-F 12	400310X1	601	1-D 14	400322X1	371	1-C 15
400287X1	175	1-B 19	400287X1	1073	1-F 13	400310X1	603	1-D 14	400322X1	821	1-E 12
400287X1	177	1-B 19	400287X1	1099	1-F 15	400310X1	843	1-E 14	400322X1	925	1-E 22
400287X1	179	1-B 19	400287X1	1109	1-F 16	400310X1	959	1-F 1	400322X1	929	1-E 22
400287X1	181	1-B 20	400287X1	1121	1-F 18	400310X1	1037	1-F 9	400322X1	933	1-E 23
400287X1	183	1-B 20	400287X1	1123	1-F 18	400310X1	1043	1-F 10	400322X1	935	1-E 23
400287X1	197	1-B 21	400287X1	1189	1-F 24	400310X1	1121	1-F 18	400322X1	937	1-E 23
400287X1	199	1-B 21	400287X1	1191	1-G 1	400310X1	1123	1-F 18	400322X1	993	1-F 5
400287X1	203	1-B 22	400287X1	1193	1-G 1	400310X1	1171	1-F 23	400322X1	995	1-F 5
400287X1	205	1-B 22	400288X1	989	1-F 4	400310X1	1177	1-F 23	400322X1	999	1-F 5
400287X1	209	1-B 22	400288X1	991	1-F 5	400310X1	1203	1-G 2	400323X1	667	1-D 20
400287X1	211	1-B 23	400288X1	1017	1-F 7	400311X1	811	1-E 11	400323X1	669	1-D 20
400287X1	213	1-B 23	400289X1	579	1-D 11	400313X1	1067	1-F 12	400323X1	735	1-E 3
400287X1	215	1-B 23	400289X1	679	1-D 21	400313X1	1123	1-F 18	400323X1	741	1-E 4
400287X1	267	1-C 4	400289X1	681	1-D 22	400313X1	1185	1-F 24	400323X1	745	1-E 4
400287X1	307	1-C 8	400289X1	989	1-F 4	400313X1	1187	1-F 24	400323X1	747	1-E 4

Part No.	Page	Grid	Part No.	Page	Grid	Part No.	Page	Grid	Part No.	Page	Grid
400323X1	829	1-E 12	400340X1	609	1-D 14	400357X1	621	1-D 16	400366X1	823	1-E 12
400323X1	843	1-E 14	400340X1	715	1-E 1	400357X1	625	1-D 16	400366X1	825	1-E 12
400323X1	847	1-E 14	400340X1	779	1-E 7	400357X1	629	1-D 16	400366X1	829	1-E 12
400323X1	853	1-E 15	400340X1	1023	1-F 8	400357X1	631	1-D 17	400366X1	837	1-E 13
400323X1	859	1-E 15	400340X1	1025	1-F 8	400357X1	633	1-D 17	400366X1	839	1-E 13
400324X1	735	1-E 3	400340X1	1027	1-F 8	400357X1	635	1-D 17	400366X1	843	1-E 14
400324X1	741	1-E 4	400340X1	1029	1-F 8	400357X1	637	1-D 17	400366X1	845	1-E 14
400324X1	829	1-E 12	400340X1	1091	1-F 15	400357X1	697	1-D 23	400366X1	849	1-E 14
400324X1	843	1-E 14	400340X1	1093	1-F 15	400357X1	699	1-D 23	400366X1	851	1-E 15
400325X1	829	1-E 12	400340X1	1095	1-F 15	400357X1	761	1-E 6	400366X1	859	1-E 15
400330X1	1091	1-F 15	400340X1	1185	1-F 24	400357X1	815	1-E 11	400366X1	995	1-F 5
400330X1	1093	1-F 15	400340X1	1187	1-F 24	400357X1	819	1-E 11	400367X1	741	1-E 4
400330X1	1185	1-F 24	400340X1	1189	1-F 24	400357X1	821	1-E 12	400367X1	829	1-E 12
400330X1	1187	1-F 24	400340X1	1191	1-G 1	400357X1	823	1-E 12	400367X1	841	1-E 14
400331X1	1091	1-F 15	400341X1	211	1-B 23	400357X1	825	1-E 12	400367X1	857	1-E 15
400331X1	1093	1-F 15	400341X1	307	1-C 8	400357X1	839	1-E 13	400368X1	747	1-E 4
400332X1	819	1-E 11	400341X1	309	1-C 8	400357X1	843	1-E 14	400368X1	829	1-E 12
400332X1	1091	1-F 15	400341X1	375	1-C 15	400357X1	847	1-E 14	400368X1	843	1-E 14
400332X1	1093	1-F 15	400341X1	377	1-C 15	400357X1	849	1-E 14	400369X1	829	1-E 12
400333X1	1091	1-F 15	400341X1	381	1-C 16	400357X1	851	1-E 15	400370X1	829	1-E 12
400333X1	1093	1-F 15	400341X1	573	1-D 11	400357X1	853	1-E 15	400372X1	841	1-E 14
400333X1	1185	1-F 24	400341X1	575	1-D 11	400357X1	857	1-E 15	400374X1	787	1-E 8
400333X1	1187	1-F 24	400341X1	581	1-D 12	400357X1	859	1-E 15	400374X1	789	1-E 8
400334X1	173	1-B 19	400341X1	599	1-D 13	400357X1	861	1-E 16	400374X1	829	1-E 12
400334X1	1075	1-F 13	400341X1	601	1-D 14	400357X1	863	1-E 16	400374X1	885	1-E 18
400336X1	115	1-B 13	400341X1	603	1-D 14	400357X1	865	1-E 16	400374X1	909	1-E 20
400336X1	117	1-B 13	400341X1	609	1-D 14	400357X1	871	1-E 17	400374X1	915	1-E 21
400339X1	95	1-B 11	400341X1	625	1-D 16	400357X1	881	1-E 18	400375X1	555	1-D 9
400339X1	101	1-B 12	400341X1	735	1-E 3	400357X1	883	1-E 18	400375X1	557	1-D 9
400339X1	119	1-B 13	400341X1	973	1-F 3	400357X1	885	1-E 18	400375X1	667	1-D 20
400339X1	211	1-B 23	400341X1	1023	1-F 8	400357X1	973	1-F 3	400375X1	669	1-D 20
400339X1	265	1-C 4	400341X1	1025	1-F 8	400357X1	975	1-F 3	400375X1	921	1-E 22
400339X1	267	1-C 4	400341X1	1027	1-F 8	400357X1	1153	1-F 21	400376X1	95	1-B 11
400339X1	307	1-C 8	400341X1	1029	1-F 8	400358X1	101	1-B 12	400376X1	99	1-B 11
400339X1	309	1-C 8	400347X1	749	1-E 4	400358X1	407	1-C 18	400376X1	101	1-B 12
400339X1	375	1-C 15	400348X1	749	1-E 4	400358X1	409	1-C 18	400376X1	159	1-B 17
400339X1	377	1-C 15	400348X1	819	1-E 11	400358X1	657	1-D 19	400376X1	161	1-B 18
400339X1	381	1-C 16	400350X1	551	1-D 9	400358X1	839	1-E 13	400376X1	399	1-C 17
400339X1	385	1-C 16	400350X1	553	1-D 9	400359X1	843	1-E 14	400376X1	667	1-D 20
400339X1	581	1-D 12	400352X1	751	1-E 5	400359X1	849	1-E 14	400376X1	669	1-D 20
400339X1	607	1-D 14	400352X1	755	1-E 5	400359X1	851	1-E 15	400376X1	797	1-E 9
400339X1	609	1-D 14	400352X1	761	1-E 6	400360X1	827	1-E 12	400376X1	809	1-E 10
400339X1	621	1-D 16	400354X1	1259	1-G 7	400360X1	829	1-E 12	400376X1	829	1-E 12
400339X1	625	1-D 16	400356X1	1065	1-F 12	400361X1	99	1-B 11	400376X1	837	1-E 13
400339X1	629	1-D 16	400357X1	95	1-B 11	400361X1	377	1-C 15	400376X1	843	1-E 14
400339X1	671	1-D 21	400357X1	107	1-B 12	400361X1	383	1-C 16	400376X1	847	1-E 14
400339X1	683	1-D 22	400357X1	109	1-B 12	400361X1	747	1-E 4	400376X1	849	1-E 14
400339X1	735	1-E 3	400357X1	111	1-B 13	400361X1	751	1-E 5	400376X1	851	1-E 15
400339X1	739	1-E 3	400357X1	113	1-B 13	400361X1	755	1-E 5	400376X1	853	1-E 15
400339X1	741	1-E 4	400357X1	127	1-B 14	400361X1	761	1-E 6	400376X1	859	1-E 15
400339X1	749	1-E 4	400357X1	129	1-B 14	400361X1	781	1-E 8	400376X1	881	1-E 18
400339X1	753	1-E 5	400357X1	173	1-B 19	400361X1	829	1-E 12	400376X1	921	1-E 22
400339X1	757	1-E 5	400357X1	197	1-B 21	400361X1	837	1-E 13	400377X1	747	1-E 4
400339X1	779	1-E 7	400357X1	199	1-B 21	400361X1	843	1-E 14	400377X1	751	1-E 5
400339X1	819	1-E 11	400357X1	201	1-B 22	400361X1	859	1-E 15	400377X1	753	1-E 5
400339X1	821	1-E 12	400357X1	203	1-B 22	400361X1	881	1-E 18	400377X1	755	1-E 5
400339X1	823	1-E 12	400357X1	205	1-B 22	400361X1	883	1-E 18	400377X1	757	1-E 5
400339X1	825	1-E 12	400357X1	303	1-C 8	400361X1	885	1-E 18	400377X1	829	1-E 12
400339X1	839	1-E 13	400357X1	305	1-C 8	400361X1	939	1-E 23	400377X1	837	1-E 13
400339X1	973	1-F 3	400357X1	375	1-C 15	400363X1	837	1-E 13	400377X1	843	1-E 14
400339X1	1091	1-F 15	400357X1	385	1-C 16	400365X1	183	1-B 20	400378X1	735	1-E 3
400339X1	1093	1-F 15	400357X1	401	1-C 18	400365X1	829	1-E 12	400378X1	741	1-E 4
400339X1	1121	1-F 18	400357X1	403	1-C 18	400365X1	837	1-E 13	400378X1	747	1-E 4
400339X1	1123	1-F 18	400357X1	407	1-C 18	400365X1	839	1-E 13	400378X1	749	1-E 4
400339X1	1153	1-F 21	400357X1	409	1-C 18	400365X1	843	1-E 14	400378X1	841	1-E 14
400340X1	133	1-B 15	400357X1	551	1-D 9	400365X1	845	1-E 14	400378X1	845	1-E 14
400340X1	149	1-B 16	400357X1	553	1-D 9	400365X1	849	1-E 14	400378X1	857	1-E 15
400340X1	211	1-B 23	400357X1	559	1-D 9	400365X1	851	1-E 15	400380X1	815	1-E 11
400340X1	213	1-B 23	400357X1	561	1-D 10	400365X1	945	1-E 24	400381X1	625	1-D 16
400340X1	215	1-B 23	400357X1	563	1-D 10	400366X1	93	1-B 11	400381X1	683	1-D 22
400340X1	265	1-C 4	400357X1	583	1-D 12	400366X1	99	1-B 11	400381X1	815	1-E 11
400340X1	267	1-C 4	400357X1	591	1-D 13	400366X1	133	1-B 15	400381X1	847	1-E 14
400340X1	307	1-C 8	400357X1	603	1-D 14	400366X1	135	1-B 15	400381X1	853	1-E 15
400340X1	309	1-C 8	400357X1	605	1-D 14	400366X1	741	1-E 4	400381X1	867	1-E 16
400340X1	573	1-D 11	400357X1	617	1-D 15	400366X1	761	1-E 6	400381X1	869	1-E 16

INDEX

Part No.	Page	Grid	Part No.	Page	Grid	Part No.	Page	Grid	Part No.	Page	Grid
400381X1	973	1-F 3	400588X1	839	1-E 13	400645X1	741	1-E 4	400702X1	145	1-B 16
400381X1	975	1-F 3	400588X1	859	1-E 15	400647X1	133	1-B 15	400702X1	147	1-B 16
400382X1	215	1-B 23	400589X1	839	1-E 13	400647X1	135	1-B 15	400702X1	179	1-B 19
400403X1	245	1-C 2	400590X1	839	1-E 13	400649X1	97	1-B 11	400702X1	181	1-B 20
400404X1	245	1-C 2	400591X1	839	1-E 13	400649X1	103	1-B 12	400702X1	843	1-E 14
400405X1	245	1-C 2	400593X1	241	1-C 2	400650X1	751	1-E 5	400702X1	1099	1-F 15
400406X1	245	1-C 2	400593X1	243	1-C 2	400650X1	755	1-E 5	400703X1	95	1-B 11
400407X1	245	1-C 2	400593X1	667	1-D 20	400654X1	133	1-B 15	400703X1	101	1-B 12
400408X1	361	1-C 14	400593X1	669	1-D 20	400654X1	135	1-B 15	400704X1	93	1-B 11
400410X1	819	1-E 11	400593X1	837	1-E 13	400655X1	133	1-B 15	400704X1	99	1-B 11
400410X1	821	1-E 12	400593X1	845	1-E 14	400655X1	135	1-B 15	400706X1	395	1-C 17
400412X1	995	1-F 5	400593X1	849	1-E 14	400657X1	135	1-B 15	400708X1	361	1-C 14
400414X1	819	1-E 11	400593X1	851	1-E 15	400658X1	99	1-B 11	400715X1	1089	1-F 14
400414X1	821	1-E 12	400593X1	995	1-F 5	400659X1	99	1-B 11	400717X1	279	1-C 5
400416X1	749	1-E 4	400595X1	837	1-E 13	400665X1	99	1-B 11	400753X1	273	1-C 5
400416X1	809	1-E 10	400596X1	837	1-E 13	400665X1	1099	1-F 15	400754X1	223	1-B 24
400416X1	819	1-E 11	400597X1	145	1-B 16	400667X1	133	1-B 15	400780X1	1043	1-F 10
400416X1	821	1-E 12	400597X1	375	1-C 15	400667X1	135	1-B 15	400781X1	361	1-C 14
400416X1	823	1-E 12	400597X1	377	1-C 15	400674X1	93	1-B 11	400782X1	225	1-B 24
400416X1	825	1-E 12	400597X1	385	1-C 16	400674X1	99	1-B 11	400782X1	367	1-C 14
400416X1	837	1-E 13	400597X1	839	1-E 13	400675X1	93	1-B 11	400825X1	749	1-E 4
400416X1	843	1-E 14	400597X1	849	1-E 14	400675X1	99	1-B 11	400826X1	113	1-B 13
400416X1	845	1-E 14	400597X1	851	1-E 15	400678X1	95	1-B 11	400831X1	403	1-C 18
400416X1	859	1-E 15	400598X1	183	1-B 20	400678X1	99	1-B 11	400831X1	405	1-C 18
400416X1	883	1-E 18	400598X1	839	1-E 13	400681X1	95	1-B 11	400834X1	367	1-C 14
400417X1	745	1-E 4	400599X1	93	1-B 11	400681X1	99	1-B 11	400834X1	369	1-C 14
400418X1	175	1-B 19	400599X1	99	1-B 11	400682X1	95	1-B 11	400834X1	1077	1-F 13
400419X1	821	1-E 12	400599X1	127	1-B 14	400682X1	99	1-B 11	400835X1	367	1-C 14
400420X1	821	1-E 12	400599X1	135	1-B 15	400682X1	581	1-D 12	400835X1	369	1-C 14
400421X1	821	1-E 12	400599X1	149	1-B 16	400682X1	617	1-D 15	400835X1	775	1-E 7
400422X1	821	1-E 12	400599X1	151	1-B 17	400684X1	95	1-B 11	400835X1	777	1-E 7
400423X1	821	1-E 12	400599X1	153	1-B 17	400684X1	99	1-B 11	400836X1	367	1-C 14
400428X1	741	1-E 4	400599X1	581	1-D 12	400686X1	179	1-B 19	400836X1	369	1-C 14
400428X1	745	1-E 4	400599X1	591	1-D 13	400686X1	181	1-B 20	400837X1	145	1-B 16
400428X1	749	1-E 4	400599X1	597	1-D 13	400687X1	99	1-B 11	400837X1	147	1-B 16
400429X1	179	1-B 19	400599X1	599	1-D 13	400688X1	147	1-B 16	400837X1	197	1-B 21
400453X1	321	1-C 10	400599X1	601	1-D 14	400688X1	759	1-E 5	400837X1	199	1-B 21
400455X1	1111	1-F 17	400599X1	603	1-D 14	400689X1	95	1-B 11	400837X1	201	1-B 22
400455X1	1113	1-F 17	400599X1	625	1-D 16	400689X1	99	1-B 11	400837X1	205	1-B 22
400455X1	1115	1-F 17	400599X1	633	1-D 17	400689X1	179	1-B 19	400837X1	241	1-C 2
400486X1	1117	1-F 17	400599X1	705	1-D 24	400689X1	181	1-B 20	400837X1	243	1-C 2
400497X1	395	1-C 17	400599X1	715	1-E 1	400689X1	843	1-E 14	400837X1	331	1-C 11
400511X1	201	1-B 22	400599X1	1023	1-F 8	400689X1	855	1-E 15	400837X1	351	1-C 13
400511X1	279	1-C 5	400599X1	1025	1-F 8	400691X1	179	1-B 19	400837X1	353	1-C 13
400511X1	353	1-C 13	400599X1	1027	1-F 8	400691X1	181	1-B 20	400837X1	359	1-C 13
400511X1	379	1-C 15	400599X1	1029	1-F 8	400692X1	93	1-B 11	400837X1	361	1-C 14
400553X1	1073	1-F 13	400599X1	1095	1-F 15	400692X1	99	1-B 11	400837X1	367	1-C 14
400561X1	223	1-B 24	400599X1	1105	1-F 16	400693X1	93	1-B 11	400837X1	369	1-C 14
400561X1	1191	1-G 1	400599X1	1107	1-F 16	400693X1	101	1-B 12	400837X1	371	1-C 15
400561X1	1193	1-G 1	400599X1	1179	1-F 23	400693X1	133	1-B 15	400837X1	387	1-C 16
400562X1	225	1-B 24	400599X1	1185	1-F 24	400693X1	135	1-B 15	400837X1	391	1-C 17
400562X1	245	1-C 2	400599X1	1187	1-F 24	400694X1	133	1-B 15	400837X1	393	1-C 17
400562X1	279	1-C 5	400602X1	307	1-C 8	400694X1	135	1-B 15	400837X1	843	1-E 14
400562X1	329	1-C 10	400602X1	309	1-C 8	400695X1	197	1-B 21	400837X1	855	1-E 15
400562X1	361	1-C 14	400603X1	1099	1-F 15	400695X1	199	1-B 21	400837X1	1023	1-F 8
400562X1	367	1-C 14	400604X1	1099	1-F 15	400695X1	203	1-B 22	400837X1	1025	1-F 8
400562X1	373	1-C 15	400607X1	745	1-E 4	400695X1	205	1-B 22	400837X1	1027	1-F 8
400562X1	375	1-C 15	400607X1	747	1-E 4	400695X1	1099	1-F 15	400837X1	1029	1-F 8
400562X1	379	1-C 15	400607X1	847	1-E 14	400696X1	101	1-B 12	400837X1	1099	1-F 15
400562X1	383	1-C 16	400607X1	853	1-E 15	400697X1	93	1-B 11	400837X1	1191	1-G 1
400564X1	819	1-E 11	400614X1	749	1-E 4	400697X1	101	1-B 12	400861X1	329	1-C 10
400564X1	825	1-E 12	400616X1	819	1-E 11	400699X1	133	1-B 15	400862X1	247	1-C 2
400565X1	819	1-E 11	400616X1	995	1-F 5	400699X1	135	1-B 15	400862X1	249	1-C 2
400568X1	825	1-E 12	400618X1	749	1-E 4	400700X1	823	1-E 12	400862X1	251	1-C 3
400569X1	825	1-E 12	400620X1	735	1-E 3	400700X1	825	1-E 12	400862X1	253	1-C 3
400570X1	113	1-B 13	400621X1	753	1-E 5	400700X1	849	1-E 14	400862X1	255	1-C 3
400576X1	1073	1-F 13	400621X1	757	1-E 5	400700X1	851	1-E 15	400862X1	1263	1-G 8
400577X1	837	1-E 13	400621X1	759	1-E 5	400700X1	1099	1-F 15	400864X1	269	1-C 4
400578X1	837	1-E 13	400625X1	741	1-E 4	400701X1	95	1-B 11	400865X1	383	1-C 16
400580X1	837	1-E 13	400627X1	179	1-B 19	400701X1	101	1-B 12	400899X1	215	1-B 23
400582X1	837	1-E 13	400627X1	181	1-B 20	400701X1	145	1-B 16	400932X1	1037	1-F 9
400583X1	183	1-B 20	400628X1	735	1-E 3	400701X1	147	1-B 16	400932X1	1043	1-F 10
400584X1	837	1-E 13	400636X1	749	1-E 4	400702X1	101	1-B 12	400941X1	215	1-B 23
400584X1	843	1-E 14	400638X1	741	1-E 4	400702X1	133	1-B 15	400948X1	1023	1-F 8
400586X1	837	1-E 13	400638X1	843	1-E 14	400702X1	135	1-B 15	400948X1	1025	1-F 8

Part No.	Page	Grid	Part No.	Page	Grid	Part No.	Page	Grid	Part No.	Page	Grid
400961X1	823	1-E 12	5S-7349	317	1-C 9	500450D1	1073	1-F 13	500650D1	253	1-C 3
400963X1	825	1-E 12	5S-7349	319	1-C 9	500458D1	847	1-E 14	500651D1	255	1-C 3
400965X1	823	1-E 12	500014D1	377	1-C 15	500458D1	853	1-E 15	500652D1	257	1-C 3
400965X1	825	1-E 12	500014D1	385	1-C 16	500468D1	705	1-D 24	500653D1	247	1-C 2
400967X1	823	1-E 12	500016D1	189	1-B 20	500469D1	705	1-D 24	500653D1	249	1-C 2
400967X1	825	1-E 12	500016D1	193	1-B 21	500470D1	705	1-D 24	500653D1	251	1-C 3
400968X1	823	1-E 12	500017D1	193	1-B 21	500473D1	1023	1-F 8	500653D1	253	1-C 3
400968X1	825	1-E 12	500019D1	193	1-B 21	500473D1	1025	1-F 8	500653D1	255	1-C 3
5B-5821	421	1-C 20	500033D1	65	1-B 8	500475D1	325	1-C 10	500654D1	247	1-C 2
5B-5821	423	1-C 20	500034D1	67	1-B 8	500476D1	325	1-C 10	500654D1	249	1-C 2
5B-5821	493	1-D 3	500035D1	69	1-B 8	500477D1	325	1-C 10	500654D1	251	1-C 3
5B-5821	505	1-D 4	500037D1	71	1-B 9	500478D1	321	1-C 10	500654D1	253	1-C 3
5B-5821	507	1-D 4	500038D1	139	1-B 15	500478D1	325	1-C 10	500654D1	255	1-C 3
5B-5821	509	1-D 4	500039D1	65	1-B 8	500483D1	1127	1-F 18	500658D1	1091	1-F 15
5F-3144	459	1-C 23	500039D1	67	1-B 8	500484D2	1129	1-F 18	500658D1	1093	1-F 15
5F-3144	469	1-C 24	500039D1	69	1-B 8	500485D2	1131	1-F 19	500660D1	1093	1-F 15
5F-3144	479	1-D 1	500039D1	71	1-B 9	500486D2	1133	1-F 19	500671D1	829	1-E 12
5F-3144	489	1-D 2	500039D1	595	1-D 13	500487D2	1135	1-F 19	500672D1	829	1-E 12
5F-3999	529	1-D 6	500040D1	65	1-B 8	500488D2	1137	1-F 19	500674D1	263	1-C 4
5F-3999	535	1-D 7	500040D1	67	1-B 8	500489D2	1139	1-F 19	500676D1	263	1-C 4
5F-3999	541	1-D 8	500040D1	69	1-B 8	500490D2	1141	1-F 20	500676D2	247	1-C 2
5H-3193	493	1-D 3	500040D1	71	1-B 9	500491D2	1143	1-F 20	500676D2	249	1-C 2
5H-3252	529	1-D 6	500040D1	705	1-D 24	500493D1	1073	1-F 13	500676D2	251	1-C 3
5H-3252	535	1-D 7	500062D1	711	1-E 1	500494D1	747	1-E 4	500676D2	253	1-C 3
5H-3252	541	1-D 8	500081D1	705	1-D 24	500505D1	607	1-D 14	500676D2	255	1-C 3
5H-6005	455	1-C 23	500120D1	595	1-D 13	500510D1	213	1-B 23	500677D1	263	1-C 4
5H-6005	465	1-C 24	500124D1	595	1-D 13	500510D1	375	1-C 15	500677D2	249	1-C 2
5H-6005	475	1-D 1	500125D1	595	1-D 13	500510D1	381	1-C 16	500677D2	251	1-C 3
5H-6005	485	1-D 2	500126D1	595	1-D 13	500513D1	1073	1-F 13	500678D1	265	1-C 4
5H-8038	421	1-C 20	500127D1	859	1-E 15	500515D1	101	1-B 12	500678D1	1263	1-G 8
5H-8038	423	1-C 20	500128D1	853	1-E 15	500516D1	93	1-B 11	500679D1	331	1-C 11
5H-8985	429	1-C 20	500129D1	843	1-E 14	500517D1	133	1-B 15	500680D1	331	1-C 11
5H-8985	433	1-C 21	500142D1	179	1-B 19	500518D1	133	1-B 15	500682D1	331	1-C 11
5H-8985	435	1-C 21	500142D1	181	1-B 20	500519D1	105	1-B 12	500685D1	105	1-B 12
5H-8985	441	1-C 22	500291D1	179	1-B 19	500523D1	839	1-E 13	500685D1	1263	1-G 8
5H-8985	445	1-C 22	500291D1	181	1-B 20	500524D1	839	1-E 13	500686D1	813	1-E 11
5H-8985	449	1-C 22	500316D1	113	1-B 13	500529D1	267	1-C 4	500687D1	667	1-D 20
5J-3886	421	1-C 20	500317D1	171	1-B 19	500530D1	267	1-C 4	500687D1	669	1-D 20
5J-3886	423	1-C 20	500317D1	173	1-B 19	500599D1	847	1-E 14	500717D1	1073	1-F 13
5L-4751	459	1-C 23	500317D1	355	1-C 13	500606D1	217	1-B 23	500717D1	1263	1-G 8
5L-4751	469	1-C 24	500361D1	1119	1-F 17	500606D1	219	1-B 23	500719D1	1207	1-G 2
5L-4751	479	1-D 1	500362D1	1119	1-F 17	500606D1	321	1-C 10	500729D1	1207	1-G 2
5L-4751	489	1-D 2	500363D1	1119	1-F 17	500607D1	217	1-B 23	500730D1	1195	1-G 1
5M-0578	461	1-C 24	500364D1	1119	1-F 17	500607D1	219	1-B 23	500731D1	1197	1-G 1
5M-0578	471	1-D 1	500367D1	333	1-C 11	500607D1	339	1-C 11	500732D1	1199	1-G 1
5M-0578	481	1-D 2	500371D1	1209	1-G 2	500610D1	321	1-C 10	500733D1	1201	1-G 2
5M-0578	491	1-D 3	500371D1	1211	1-G 3	500612D1	1155	1-F 21	500734D1	1207	1-G 2
5M-2051	493	1-D 3	500371D1	1215	1-G 3	500612D1	1157	1-F 21	500735D1	1205	1-G 2
5M-2894	137	1-B 15	500371D1	1217	1-G 3	500619D1	211	1-B 23	500736D1	1207	1-G 2
5M-6509	459	1-C 23	500371D1	1229	1-G 4	500619D1	1073	1-F 13	500737D1	1207	1-G 2
5M-6509	469	1-C 24	500371D1	1231	1-G 5	500624D1	1091	1-F 15	500738D1	1207	1-G 2
5M-6509	479	1-D 1	500371D1	1233	1-G 5	500624D1	1093	1-F 15	500744D1	49	1-B 6
5M-6509	489	1-D 2	500371D1	1235	1-G 5	500625D1	1093	1-F 15	500744D1	57	1-B 7
5M-7937	421	1-C 20	500371D1	1237	1-G 5	500627D1	197	1-B 21	500744D1	1195	1-G 1
5M-7937	423	1-C 20	500372D1	1209	1-G 2	500627D1	199	1-B 21	500745D1	51	1-B 7
5M-7937	505	1-D 4	500372D1	1211	1-G 3	500627D1	201	1-B 22	500745D1	59	1-B 7
5M-7937	507	1-D 4	500372D1	1217	1-G 3	500627D1	205	1-B 22	500745D1	1197	1-G 1
5M-7937	509	1-D 4	500372D1	1229	1-G 4	500628D1	217	1-B 23	500746D1	53	1-B 7
5M-7937	527	1-D 6	500372D1	1231	1-G 5	500630D1	219	1-B 23	500746D1	61	1-B 8
5M-7937	533	1-D 7	500372D1	1233	1-G 5	500634D1	251	1-C 3	500746D1	1199	1-G 1
5M-7937	539	1-D 7	500372D1	1235	1-G 5	500634D1	255	1-C 3	500747D1	55	1-B 7
5M-8034	265	1-C 4	500372D1	1237	1-G 5	500634D1	257	1-C 3	500747D1	63	1-B 8
5P-0765	1039	1-F 9	500378D1	1073	1-F 13	500634D1	263	1-C 4	500747D1	1201	1-G 2
5P-1404	425	1-C 20	500382D1	1075	1-F 13	500635D1	251	1-C 3	500748D2	1207	1-G 2
5P-3413	307	1-C 8	500389D1	323	1-C 10	500635D1	255	1-C 3	500749D1	1205	1-G 2
5P-3413	309	1-C 8	500392D1	323	1-C 10	500635D1	257	1-C 3	500749D1	1207	1-G 2
5P-6254	457	1-C 23	500395D2	693	1-D 23	500635D1	263	1-C 4	500752D1	907	1-E 20
5P-6254	467	1-C 24	500395D2	695	1-D 23	500637D1	263	1-C 4	500752D1	919	1-E 21
5P-6254	477	1-D 1	500396D2	693	1-D 23	500638D1	263	1-C 4	500754D1	959	1-F 1
5P-6254	487	1-D 2	500396D2	695	1-D 23	500639D1	251	1-C 3	500758D1	1099	1-F 15
5P-7843	455	1-C 23	500419D1	1173	1-F 23	500639D1	255	1-C 3	500761D1	1049	1-F 10
5P-7843	463	1-C 24	500441D2	621	1-D 16	500639D1	257	1-C 3	500761D1	1051	1-F 11
5P-7843	473	1-D 1	500442D1	1073	1-F 13	500645D1	247	1-C 2	500761D1	1069	1-F 12
5P-7843	483	1-D 2	500446D1	359	1-C 13	500646D1	249	1-C 2	500768D1	1049	1-F 10
5S-7349	315	1-C 9	500447D1	739	1-E 3	500647D1	251	1-C 3	500768D1	1051	1-F 11

INDEX

Part No.	Page	Grid	Part No.	Page	Grid	Part No.	Page	Grid	Part No.	Page	Grid
500768D1	1053	1-F 11	501070D1	895	1-E 19	501251D1	1213	1-G 3	501261D1	1213	1-G 3
500768D1	1055	1-F 11	501073D1	335	1-C 11	501251D1	1227	1-G 4	501261D1	1215	1-G 3
500768D1	1057	1-F 11	501073D1	337	1-C 11	501251D1	1237	1-G 5	501261D1	1217	1-G 3
500768D1	1067	1-F 12	501074D1	335	1-C 11	501252D1	1213	1-G 3	501261D1	1219	1-G 3
500775D1	247	1-C 2	501074D1	337	1-C 11	501252D1	1227	1-G 4	501261D1	1221	1-G 4
500775D1	249	1-C 2	501075D1	335	1-C 11	501252D1	1237	1-G 5	501261D1	1223	1-G 4
500775D1	259	1-C 3	501075D1	337	1-C 11	501253D1	1209	1-G 2	501261D1	1225	1-G 4
500776D1	251	1-C 3	501103D1	1213	1-G 3	501253D1	1211	1-G 3	501261D1	1241	1-G 6
500776D1	261	1-C 4	501103D1	1227	1-G 4	501253D1	1213	1-G 3	501262D1	1209	1-G 2
500791D2	1145	1-F 20	501103D1	1237	1-G 5	501253D1	1215	1-G 3	501262D1	1211	1-G 3
500792D2	1147	1-F 20	501104D1	1209	1-G 2	501253D1	1217	1-G 3	501262D1	1213	1-G 3
500793D2	1149	1-F 20	501104D1	1233	1-G 5	501253D1	1219	1-G 3	501262D1	1215	1-G 3
500794D2	1151	1-F 21	501104D1	1237	1-G 5	501253D1	1221	1-G 4	501262D1	1217	1-G 3
500795D1	907	1-E 20	501105D1	1215	1-G 3	501253D1	1223	1-G 4	501262D1	1219	1-G 3
500834D1	667	1-D 20	501105D1	1231	1-G 5	501253D1	1225	1-G 4	501262D1	1221	1-G 4
500834D1	669	1-D 20	501105D1	1237	1-G 5	501253D1	1227	1-G 4	501262D1	1223	1-G 4
500835D1	667	1-D 20	501106D1	1209	1-G 2	501253D1	1229	1-G 4	501262D1	1225	1-G 4
500835D1	675	1-D 21	501106D1	1233	1-G 5	501253D1	1231	1-G 5	501262D1	1241	1-G 6
500836D1	669	1-D 20	501106D1	1237	1-G 5	501253D1	1233	1-G 5	501263D1	1209	1-G 2
500836D1	673	1-D 21	501107D1	1227	1-G 4	501253D1	1235	1-G 5	501263D1	1211	1-G 3
500839D1	1049	1-F 10	501107D1	1237	1-G 5	501253D1	1239	1-G 5	501263D1	1213	1-G 3
500839D1	1051	1-F 11	501108D1	1215	1-G 3	501253D1	1241	1-G 6	501263D1	1215	1-G 3
500839D1	1053	1-F 11	501108D1	1231	1-G 5	501254D1	1209	1-G 2	501263D1	1217	1-G 3
500839D1	1055	1-F 11	501108D1	1237	1-G 5	501254D1	1211	1-G 3	501263D1	1219	1-G 3
500839D1	1057	1-F 11	501109D1	201	1-B 22	501254D1	1213	1-G 3	501263D1	1221	1-G 4
500839D1	1127	1-F 18	501110D1	199	1-B 21	501254D1	1215	1-G 3	501263D1	1223	1-G 4
500840D1	1155	1-F 21	501111D1	201	1-B 22	501254D1	1217	1-G 3	501263D1	1225	1-G 4
500841D1	1051	1-F 11	501112D1	199	1-B 21	501254D1	1219	1-G 3	501263D1	1241	1-G 6
500842D1	1049	1-F 10	501113D1	205	1-B 22	501254D1	1221	1-G 4	501264D1	1209	1-G 2
500843D1	1055	1-F 11	501114D1	197	1-B 21	501254D1	1223	1-G 4	501264D1	1211	1-G 3
500844D1	1053	1-F 11	501118D1	211	1-B 23	501254D1	1225	1-G 4	501264D1	1213	1-G 3
500849D1	1057	1-F 11	501120D1	1191	1-G 1	501254D1	1241	1-G 6	501264D1	1215	1-G 3
500853D1	1157	1-F 21	501124D1	337	1-C 11	501256D1	1189	1-F 24	501264D1	1217	1-G 3
500854D1	1127	1-F 18	501127D1	857	1-E 15	501256D1	1227	1-G 4	501264D1	1219	1-G 3
500882D1	321	1-C 10	501128D1	857	1-E 15	501256D1	1229	1-G 4	501264D1	1221	1-G 4
500910D1	213	1-B 23	501129D1	857	1-E 15	501256D1	1231	1-G 5	501264D1	1223	1-G 4
500910D1	349	1-C 12	501130D1	727	1-E 2	501256D1	1233	1-G 5	501264D1	1225	1-G 4
500925D1	671	1-D 21	501130D1	857	1-E 15	501256D1	1235	1-G 5	501264D1	1241	1-G 6
500925D1	683	1-D 22	501130D1	895	1-E 19	501257D1	1209	1-G 2	501265D1	1209	1-G 2
500927D1	1059	1-F 11	501140D1	727	1-E 2	501257D1	1211	1-G 3	501265D1	1211	1-G 3
500927D1	1061	1-F 12	501144D1	1023	1-F 8	501257D1	1213	1-G 3	501265D1	1213	1-G 3
500927D1	1093	1-F 15	501144D1	1025	1-F 8	501257D1	1215	1-G 3	501265D1	1215	1-G 3
500929D1	1091	1-F 15	501144D1	1027	1-F 8	501257D1	1217	1-G 3	501265D1	1217	1-G 3
500929D1	1093	1-F 15	501144D1	1029	1-F 8	501257D1	1219	1-G 3	501265D1	1219	1-G 3
500931D1	1093	1-F 15	501145D1	1023	1-F 8	501257D1	1221	1-G 4	501265D1	1221	1-G 4
500932D1	929	1-E 22	501145D1	1025	1-F 8	501257D1	1223	1-G 4	501265D1	1223	1-G 4
500932D1	933	1-E 23	501145D1	1027	1-F 8	501257D1	1225	1-G 4	501265D1	1225	1-G 4
500932D1	935	1-E 23	501145D1	1029	1-F 8	501257D1	1241	1-G 6	501267D1	1209	1-G 2
500932D1	937	1-E 23	501146D1	1043	1-F 10	501258D1	1211	1-G 3	501267D1	1211	1-G 3
500936D1	967	1-F 2	501147D1	1023	1-F 8	501258D1	1215	1-G 3	501267D1	1213	1-G 3
500939D1	967	1-F 2	501147D1	1025	1-F 8	501258D1	1231	1-G 5	501267D1	1215	1-G 3
500940D1	967	1-F 2	501147D1	1027	1-F 8	501258D1	1235	1-G 5	501267D1	1217	1-G 3
500950D1	749	1-E 4	501147D1	1029	1-F 8	501258D1	1237	1-G 5	501267D1	1219	1-G 3
500956D1	839	1-E 13	501148D1	597	1-D 13	501259D1	1209	1-G 2	501267D1	1221	1-G 4
500957D1	1091	1-F 15	501148D1	601	1-D 14	501259D1	1211	1-G 3	501267D1	1223	1-G 4
500957D1	1093	1-F 15	501153D1	1095	1-F 15	501259D1	1213	1-G 3	501267D1	1225	1-G 4
500967D1	967	1-F 2	501153D1	1263	1-G 8	501259D1	1215	1-G 3	501267D1	1227	1-G 4
500968D1	967	1-F 2	501168D1	333	1-C 11	501259D1	1217	1-G 3	501267D1	1229	1-G 4
500970D1	99	1-B 11	501169D1	333	1-C 11	501259D1	1219	1-G 3	501267D1	1231	1-G 5
500970D1	101	1-B 12	501170D1	333	1-C 11	501259D1	1221	1-G 4	501267D1	1233	1-G 5
500970D1	719	1-E 1	501171D1	333	1-C 11	501259D1	1223	1-G 4	501267D1	1235	1-G 5
500970D1	723	1-E 2	501178D1	121	1-B 14	501259D1	1225	1-G 4	501267D1	1239	1-G 5
500970D1	765	1-E 6	501178D1	1263	1-G 8	501259D1	1241	1-G 6	501267D1	1241	1-G 6
500970D1	769	1-E 6	501186D1	653	1-D 19	501260D1	1209	1-G 2	501268D1	1227	1-G 4
500973D1	1099	1-F 15	501196D1	655	1-D 19	501260D1	1211	1-G 3	501268D1	1237	1-G 5
500978D1	1099	1-F 15	501197D1	657	1-D 19	501260D1	1213	1-G 3	501269D1	1215	1-G 3
500990D1	1099	1-F 15	501198D1	657	1-D 19	501260D1	1215	1-G 3	501269D1	1231	1-G 5
501026D1	1179	1-F 23	501205D1	617	1-D 15	501260D1	1217	1-G 3	501269D1	1237	1-G 5
501026D1	1263	1-G 8	501210D1	1095	1-F 15	501260D1	1219	1-G 3	501270D1	1227	1-G 4
501028D1	1091	1-F 15	501215D1	657	1-D 19	501260D1	1221	1-G 4	501271D1	1213	1-G 3
501033D1	279	1-C 5	501216D1	657	1-D 19	501260D1	1223	1-G 4	501272D1	1209	1-G 2
501033D1	367	1-C 14	501250D1	1227	1-G 4	501260D1	1225	1-G 4	501272D1	1211	1-G 3
501033D1	369	1-C 14	501250D1	1229	1-G 4	501260D1	1241	1-G 6	501272D1	1213	1-G 3
501045D1	141	1-B 16	501250D1	1235	1-G 5	501261D1	1209	1-G 2	501272D1	1215	1-G 3
501051D1	1185	1-F 24	501250D1	1237	1-G 5	501261D1	1211	1-G 3	501272D1	1217	1-G 3

Part No.	Page	Grid
501272D1	1219	1-G 3
501272D1	1221	1-G 4
501272D1	1223	1-G 4
501272D1	1225	1-G 4
501272D1	1227	1-G 4
501272D1	1229	1-G 4
501272D1	1231	1-G 5
501272D1	1233	1-G 5
501272D1	1235	1-G 5
501273D1	1209	1-G 2
501273D1	1211	1-G 3
501273D1	1213	1-G 3
501273D1	1215	1-G 3
501273D1	1217	1-G 3
501273D1	1219	1-G 3
501273D1	1221	1-G 4
501273D1	1223	1-G 4
501273D1	1225	1-G 4
501274D1	1209	1-G 2
501274D1	1211	1-G 3
501274D1	1213	1-G 3
501274D1	1215	1-G 3
501274D1	1217	1-G 3
501274D1	1219	1-G 3
501274D1	1221	1-G 4
501274D1	1223	1-G 4
501274D1	1225	1-G 4
501274D1	1227	1-G 4
501274D1	1229	1-G 4
501274D1	1231	1-G 5
501274D1	1233	1-G 5
501274D1	1235	1-G 5
501275D1	1231	1-G 5
501275D1	1235	1-G 5
501275D1	1237	1-G 5
501276D1	1213	1-G 3
501276D1	1227	1-G 4
501276D1	1237	1-G 5
501277D1	1209	1-G 2
501277D1	1211	1-G 3
501277D1	1213	1-G 3
501277D1	1215	1-G 3
501277D1	1217	1-G 3
501277D1	1219	1-G 3
501277D1	1221	1-G 4
501277D1	1223	1-G 4
501277D1	1225	1-G 4
501277D1	1227	1-G 4
501277D1	1229	1-G 4
501277D1	1231	1-G 5
501277D1	1233	1-G 5
501277D1	1235	1-G 5
501277D1	1239	1-G 5
501277D1	1241	1-G 6
501278D1	1215	1-G 3
501278D1	1231	1-G 5
501278D1	1237	1-G 5
501280D1	1215	1-G 3
501280D1	1231	1-G 5
501280D1	1237	1-G 5
501281D1	1209	1-G 2
501281D1	1211	1-G 3
501281D1	1213	1-G 3
501281D1	1215	1-G 3
501281D1	1217	1-G 3
501281D1	1219	1-G 3
501281D1	1221	1-G 4
501281D1	1223	1-G 4
501281D1	1225	1-G 4
501281D1	1227	1-G 4
501281D1	1229	1-G 4
501281D1	1231	1-G 5
501281D1	1233	1-G 5
501281D1	1235	1-G 5
501282D1	1209	1-G 2
501282D1	1211	1-G 3
501282D1	1213	1-G 3
501282D1	1215	1-G 3
501282D1	1217	1-G 3
501282D1	1219	1-G 3
501282D1	1221	1-G 4
501282D1	1223	1-G 4
501282D1	1225	1-G 4
501283D1	1229	1-G 4
501283D1	1237	1-G 5
501284D1	1235	1-G 5
501284D1	1237	1-G 5
501285D1	1235	1-G 5
501285D1	1237	1-G 5
501286D1	1209	1-G 2
501286D1	1211	1-G 3
501286D1	1213	1-G 3
501286D1	1215	1-G 3
501286D1	1217	1-G 3
501286D1	1219	1-G 3
501286D1	1221	1-G 4
501286D1	1223	1-G 4
501286D1	1225	1-G 4
501286D1	1227	1-G 4
501286D1	1229	1-G 4
501286D1	1231	1-G 5
501286D1	1233	1-G 5
501286D1	1235	1-G 5
501287D1	1209	1-G 2
501287D1	1211	1-G 3
501287D1	1213	1-G 3
501287D1	1215	1-G 3
501287D1	1217	1-G 3
501287D1	1219	1-G 3
501287D1	1221	1-G 4
501287D1	1223	1-G 4
501287D1	1225	1-G 4
501287D1	1227	1-G 4
501287D1	1229	1-G 4
501287D1	1231	1-G 5
501287D1	1233	1-G 5
501287D1	1235	1-G 5
501287D1	1239	1-G 5
501287D1	1241	1-G 6
501288D1	1211	1-G 3
501288D1	1231	1-G 5
501288D1	1237	1-G 5
501289D1	1227	1-G 4
501289D1	1229	1-G 4
501289D1	1231	1-G 5
501289D1	1233	1-G 5
501289D1	1235	1-G 5
501290D1	1209	1-G 2
501290D1	1211	1-G 3
501290D1	1213	1-G 3
501290D1	1215	1-G 3
501290D1	1217	1-G 3
501290D1	1219	1-G 3
501290D1	1221	1-G 4
501290D1	1223	1-G 4
501290D1	1225	1-G 4
501290D1	1241	1-G 6
501291D1	1209	1-G 2
501291D1	1211	1-G 3
501291D1	1213	1-G 3
501291D1	1215	1-G 3
501291D1	1217	1-G 3
501291D1	1219	1-G 3
501291D1	1221	1-G 4
501291D1	1223	1-G 4
501291D1	1225	1-G 4
501291D1	1241	1-G 6
501292D1	1209	1-G 2
501292D1	1211	1-G 3
501292D1	1213	1-G 3
501292D1	1215	1-G 3
501292D1	1217	1-G 3
501292D1	1219	1-G 3
501292D1	1221	1-G 4
501292D1	1223	1-G 4
501292D1	1225	1-G 4
501292D1	1241	1-G 6
501293D1	1209	1-G 2
501293D1	1211	1-G 3
501293D1	1213	1-G 3
501293D1	1215	1-G 3
501293D1	1217	1-G 3
501293D1	1219	1-G 3
501293D1	1221	1-G 4
501293D1	1223	1-G 4
501293D1	1225	1-G 4
501293D1	1241	1-G 6
501294D1	1209	1-G 2
501294D1	1211	1-G 3
501294D1	1213	1-G 3
501294D1	1215	1-G 3
501294D1	1217	1-G 3
501294D1	1219	1-G 3
501294D1	1221	1-G 4
501294D1	1223	1-G 4
501294D1	1225	1-G 4
501294D1	1241	1-G 6
501295D1	1209	1-G 2
501295D1	1211	1-G 3
501295D1	1213	1-G 3
501295D1	1215	1-G 3
501295D1	1217	1-G 3
501295D1	1219	1-G 3
501295D1	1221	1-G 4
501295D1	1223	1-G 4
501295D1	1225	1-G 4
501295D1	1241	1-G 6
501296D1	1209	1-G 2
501296D1	1211	1-G 3
501296D1	1213	1-G 3
501296D1	1215	1-G 3
501296D1	1217	1-G 3
501296D1	1219	1-G 3
501296D1	1221	1-G 4
501296D1	1223	1-G 4
501296D1	1225	1-G 4
501296D1	1241	1-G 6
501297D1	1209	1-G 2
501297D1	1211	1-G 3
501297D1	1213	1-G 3
501297D1	1215	1-G 3
501297D1	1217	1-G 3
501297D1	1219	1-G 3
501297D1	1221	1-G 4
501297D1	1223	1-G 4
501297D1	1225	1-G 4
501298D1	1209	1-G 2
501298D1	1211	1-G 3
501298D1	1213	1-G 3
501298D1	1215	1-G 3
501298D1	1217	1-G 3
501298D1	1219	1-G 3
501298D1	1221	1-G 4
501298D1	1223	1-G 4
501298D1	1225	1-G 4
501299D1	1209	1-G 2
501299D1	1211	1-G 3
501299D1	1213	1-G 3
501299D1	1215	1-G 3
501299D1	1217	1-G 3
501299D1	1219	1-G 3
501299D1	1221	1-G 4
501299D1	1223	1-G 4
501299D1	1225	1-G 4
501299D1	1241	1-G 6
501300D1	1209	1-G 2
501300D1	1211	1-G 3
501300D1	1213	1-G 3
501300D1	1215	1-G 3
501300D1	1217	1-G 3
501300D1	1219	1-G 3
501300D1	1221	1-G 4
501300D1	1223	1-G 4
501300D1	1225	1-G 4
501300D1	1241	1-G 6
501301D1	1209	1-G 2
501301D1	1211	1-G 3
501301D1	1213	1-G 3
501301D1	1215	1-G 3
501301D1	1217	1-G 3
501301D1	1219	1-G 3
501301D1	1221	1-G 4
501301D1	1223	1-G 4
501301D1	1225	1-G 4
501301D1	1241	1-G 6
501302D1	1209	1-G 2
501302D1	1211	1-G 3
501302D1	1213	1-G 3
501302D1	1215	1-G 3
501302D1	1217	1-G 3
501302D1	1219	1-G 3
501302D1	1221	1-G 4
501302D1	1223	1-G 4
501302D1	1225	1-G 4
501303D1	1209	1-G 2
501303D1	1211	1-G 3
501303D1	1213	1-G 3
501303D1	1215	1-G 3
501303D1	1217	1-G 3
501303D1	1219	1-G 3
501303D1	1221	1-G 4
501303D1	1223	1-G 4
501303D1	1225	1-G 4
501303D1	1241	1-G 6
501305D1	1215	1-G 3
501305D1	1231	1-G 5
501305D1	1237	1-G 5
501306D1	1209	1-G 2
501306D1	1211	1-G 3
501306D1	1213	1-G 3
501306D1	1215	1-G 3
501306D1	1217	1-G 3
501306D1	1219	1-G 3
501306D1	1221	1-G 4
501306D1	1223	1-G 4
501306D1	1225	1-G 4
501306D1	1227	1-G 4
501306D1	1229	1-G 4
501306D1	1231	1-G 5
501306D1	1233	1-G 5
501306D1	1235	1-G 5
501306D1	1239	1-G 5
501306D1	1241	1-G 6
501307D1	1209	1-G 2
501307D1	1233	1-G 5
501307D1	1237	1-G 5
501314D1	1243	1-G 6
501315D1	1247	1-G 6
501316D1	1255	1-G 7
501317D1	1251	1-G 7
501318D1	1253	1-G 7
501319D1	1245	1-G 6
501320D1	1249	1-G 6
501321D1	1243	1-G 6
501322D1	1245	1-G 6
501323D1	1247	1-G 6
501324D1	1249	1-G 6
501325D1	1251	1-G 7
501326D1	1253	1-G 7
501327D1	1255	1-G 7

INDEX

Part No.	Page	Grid
501328D1	1243	1-G 6
501329D1	1245	1-G 6
501330D1	1247	1-G 6
501331D1	1249	1-G 6
501332D1	1251	1-G 7
501333D1	1253	1-G 7
501334D1	1255	1-G 7
501335D1	1243	1-G 6
501336D1	1245	1-G 6
501337D1	1247	1-G 6
501338D1	1249	1-G 6
501339D1	1251	1-G 7
501340D1	1253	1-G 7
501341D1	1255	1-G 7
501342D1	1243	1-G 6
501343D1	1245	1-G 6
501344D1	1247	1-G 6
501345D1	1251	1-G 7
501346D1	1253	1-G 7
501347D1	1255	1-G 7
501348D1	1249	1-G 6
501349D1	1243	1-G 6
501350D1	1245	1-G 6
501351D1	1247	1-G 6
501352D1	1249	1-G 6
501353D1	1251	1-G 7
501354D1	1253	1-G 7
501355D1	1255	1-G 7
501356D1	1243	1-G 6
501357D1	1245	1-G 6
501358D1	1247	1-G 6
501359D1	1249	1-G 6
501360D1	1251	1-G 7
501361D1	1253	1-G 7
501362D1	1255	1-G 7
501370D1	1243	1-G 6
501371D1	1247	1-G 6
501372D1	1255	1-G 7
501373D1	1251	1-G 7
501374D1	1245	1-G 6
501375D1	1249	1-G 6
501376D1	1253	1-G 7
501377D1	1243	1-G 6
501378D1	1245	1-G 6
501379D1	1247	1-G 6
501380D1	1249	1-G 6
501381D1	1251	1-G 7
501382D1	1253	1-G 7
501383D1	1255	1-G 7
501384D1	1243	1-G 6
501385D1	1247	1-G 6
501386D1	1255	1-G 7
501387D1	1251	1-G 7
501388D1	1245	1-G 6
501389D1	1249	1-G 6
501390D1	1253	1-G 7
501391D1	1247	1-G 6
501392D1	1255	1-G 7
501393D1	1251	1-G 7
501394D1	1245	1-G 6
501395D1	1249	1-G 6
501396D1	1253	1-G 7
501397D1	1243	1-G 6
501405D1	1227	1-G 4
501405D1	1229	1-G 4
501405D1	1231	1-G 5
501405D1	1233	1-G 5
501405D1	1235	1-G 5
501406D1	1191	1-G 1
501406D1	1209	1-G 2
501406D1	1211	1-G 3
501406D1	1213	1-G 3
501406D1	1215	1-G 3
501406D1	1217	1-G 3
501406D1	1219	1-G 3
501406D1	1221	1-G 4
501406D1	1223	1-G 4
501406D1	1225	1-G 4
501406D1	1227	1-G 4
501406D1	1229	1-G 4
501406D1	1231	1-G 5
501406D1	1233	1-G 5
501406D1	1235	1-G 5
501480D1	1205	1-G 2
501482D1	1205	1-G 2
501483D1	1205	1-G 2
501500D1	1227	1-G 4
501500D1	1229	1-G 4
501500D1	1231	1-G 5
501500D1	1233	1-G 5
501500D1	1235	1-G 5
501501D1	1209	1-G 2
501501D1	1211	1-G 3
501501D1	1213	1-G 3
501501D1	1215	1-G 3
501501D1	1217	1-G 3
501501D1	1219	1-G 3
501501D1	1221	1-G 4
501501D1	1223	1-G 4
501501D1	1225	1-G 4
501503D1	979	1-F 3
501503D1	985	1-F 4
501503D1	987	1-F 4
501503D1	1209	1-G 2
501503D1	1211	1-G 3
501503D1	1213	1-G 3
501503D1	1215	1-G 3
501503D1	1217	1-G 3
501503D1	1219	1-G 3
501503D1	1221	1-G 4
501503D1	1223	1-G 4
501503D1	1225	1-G 4
501503D1	1227	1-G 4
501503D1	1229	1-G 4
501503D1	1231	1-G 5
501503D1	1233	1-G 5
501503D1	1235	1-G 5
501503D1	1237	1-G 5
501504D1	979	1-F 3
501504D1	1227	1-G 4
501504D1	1229	1-G 4
501504D1	1231	1-G 5
501504D1	1233	1-G 5
501504D1	1235	1-G 5
501504D1	1239	1-G 5
501505D1	985	1-F 4
501505D1	987	1-F 4
501505D1	1209	1-G 2
501505D1	1211	1-G 3
501505D1	1213	1-G 3
501505D1	1215	1-G 3
501505D1	1217	1-G 3
501505D1	1219	1-G 3
501505D1	1221	1-G 4
501505D1	1223	1-G 4
501505D1	1225	1-G 4
501505D1	1241	1-G 6
501513D1	979	1-F 3
501513D1	1243	1-G 6
501514D1	1245	1-G 6
501515D1	1247	1-G 6
501516D1	1249	1-G 6
501517D1	1251	1-G 7
501518D1	1253	1-G 7
501519D1	1255	1-G 7
501521D1	1065	1-F 12
501522D1	1065	1-F 12
501523D1	1075	1-F 13
501524D1	1065	1-F 12
501525D1	1079	1-F 13
501526D1	1079	1-F 13
501526D1	1083	1-F 14
501527D1	1079	1-F 13
501527D1	1083	1-F 14
501528D1	1079	1-F 13
501528D1	1083	1-F 14
501529D1	1083	1-F 14
501530D1	1065	1-F 12
501530D1	1081	1-F 14
501531D1	1065	1-F 12
501532D1	225	1-B 24
501532D1	1065	1-F 12
501564D1	1191	1-G 1
501565D1	1191	1-G 1
501566D1	1191	1-G 1
501603D1	1193	1-G 1
501604D1	1191	1-G 1
501688D1	1189	1-F 24
501688D1	1191	1-G 1
501688D1	1263	1-G 8
501697D1	1027	1-F 8
501697D1	1029	1-F 8
501697D1	1043	1-F 10
501700D1	1043	1-F 10
501701D2	1037	1-F 9
501701D2	1043	1-F 10
501702D1	1037	1-F 9
501702D1	1043	1-F 10
501703D1	1037	1-F 9
501703D1	1043	1-F 10
501704D1	1037	1-F 9
501704D1	1043	1-F 10
501705D1	1037	1-F 9
501705D1	1043	1-F 10
501706D1	1035	1-F 9
501706D1	1037	1-F 9
501706D1	1041	1-F 10
501706D1	1043	1-F 10
501707D2	1043	1-F 10
501708D1	1043	1-F 10
501709D1	1037	1-F 9
501709D1	1043	1-F 10
501710D1	1037	1-F 9
501711D2	1037	1-F 9
501712D1	1043	1-F 10
501713D1	1037	1-F 9
501713D1	1043	1-F 10
501714D1	1037	1-F 9
501714D1	1043	1-F 10
501716D1	1037	1-F 9
501716D1	1043	1-F 10
501717D1	1043	1-F 10
501718D1	1037	1-F 9
501718D1	1043	1-F 10
501719D1	1037	1-F 9
501719D1	1043	1-F 10
501720D2	1037	1-F 9
501720D2	1043	1-F 10
501721D2	1037	1-F 9
501721D2	1043	1-F 10
501722D2	1037	1-F 9
501722D2	1043	1-F 10
501723D2	1037	1-F 9
501723D2	1043	1-F 10
501724D2	1037	1-F 9
501724D2	1043	1-F 10
501725D1	1037	1-F 9
501725D1	1043	1-F 10
501726D1	1037	1-F 9
501726D1	1043	1-F 10
501727D1	1037	1-F 9
501728D1	1037	1-F 9
501729D1	1037	1-F 9
501730D1	1037	1-F 9
501730D1	1043	1-F 10
501731D1	1037	1-F 9
501731D1	1043	1-F 10
501732D1	1037	1-F 9
501733D1	1037	1-F 9
501734D1	1037	1-F 9
501735D1	1037	1-F 9
501737D1	1037	1-F 9
501738D1	1043	1-F 10
501738D1	1103	1-F 16
501739D1	639	1-D 17
501739D1	641	1-D 18
501739D1	643	1-D 18
501739D1	645	1-D 18
501739D1	647	1-D 18
501739D1	649	1-D 18
501739D1	651	1-D 19
501739D1	653	1-D 19
501739D1	655	1-D 19
501740D1	1027	1-F 8
501740D1	1029	1-F 8
501742D1	639	1-D 17
501742D1	641	1-D 18
501742D1	643	1-D 18
501742D1	645	1-D 18
501742D1	647	1-D 18
501742D1	649	1-D 18
501742D1	651	1-D 19
501742D1	653	1-D 19
501742D1	655	1-D 19
501743D1	639	1-D 17
501743D1	641	1-D 18
501743D1	643	1-D 18
501743D1	645	1-D 18
501743D1	647	1-D 18
501743D1	649	1-D 18
501743D1	651	1-D 19
501743D1	653	1-D 19
501743D1	655	1-D 19
501745D1	1027	1-F 8
501745D1	1029	1-F 8
501766D1	827	1-E 12
501766D1	829	1-E 12
501766D1	1263	1-G 8
501767D1	815	1-E 11
501767D1	829	1-E 12
501771D1	819	1-E 11
501771D1	821	1-E 12
501771D1	823	1-E 12
501771D1	825	1-E 12
501771D1	1263	1-G 8
501774D1	113	1-B 13
501775D1	609	1-D 14
501785D1	609	1-D 14
501787D1	409	1-C 18
501806D1	401	1-C 18
501806D1	979	1-F 3
501806D1	985	1-F 4
501806D1	987	1-F 4
501820D1	967	1-F 2
501826D1	1095	1-F 15
501829D1	213	1-B 23
501829D1	215	1-B 23
501829D1	289	1-C 6
501830D1	285	1-C 6
501830D1	291	1-C 7
501831D1	287	1-C 6
501831D1	293	1-C 7
501832D1	285	1-C 6
501832D1	287	1-C 6
501832D1	295	1-C 7
501833D1	285	1-C 6
501833D1	287	1-C 6
501833D1	297	1-C 7
501834D1	285	1-C 6

Part No.	Page	Grid	Part No.	Page	Grid	Part No.	Page	Grid	Part No.	Page	Grid
501834D1	287	1-C 6	501949D1	359	1-C 13	502179D1	273	1-C 5	502496D1	63	1-B 8
501834D1	299	1-C 7	501952D1	375	1-C 15	502180D1	351	1-C 13	502496D1	405	1-C 18
501835D1	285	1-C 6	501952D1	381	1-C 16	502183D1	197	1-B 21	502498D1	401	1-C 18
501835D1	287	1-C 6	501962D1	245	1-C 2	502183D1	199	1-B 21	502498D1	949	1-E 24
501835D1	301	1-C 8	501962D1	383	1-C 16	502183D1	201	1-B 22	502498D1	953	1-F 1
501836D1	289	1-C 6	501963D1	967	1-F 2	502183D1	205	1-B 22	502498D1	955	1-F 1
501836D1	291	1-C 7	501973D1	177	1-B 19	502183D1	1263	1-G 8	502499D1	1027	1-F 8
501836D1	293	1-C 7	501996D1	633	1-D 17	502185D1	639	1-D 17	502499D1	1029	1-F 8
501836D1	295	1-C 7	501997D1	633	1-D 17	502185D1	641	1-D 18	502499D1	1043	1-F 10
501836D1	297	1-C 7	501998D1	377	1-C 15	502185D1	643	1-D 18	502500D1	1023	1-F 8
501836D1	299	1-C 7	501998D1	381	1-C 16	502185D1	645	1-D 18	502500D1	1025	1-F 8
501836D1	301	1-C 8	502003D1	211	1-B 23	502185D1	647	1-D 18	502500D1	1037	1-F 9
501837D1	291	1-C 7	502005D1	367	1-C 14	502185D1	649	1-D 18	502501D1	1029	1-F 8
501838D1	297	1-C 7	502005D1	369	1-C 14	502185D1	651	1-D 19	502501D1	1051	1-F 11
501839D1	299	1-C 7	502006D1	367	1-C 14	502185D1	653	1-D 19	502501D1	1055	1-F 11
501840D1	293	1-C 7	502006D1	369	1-C 14	502185D1	655	1-D 19	502501D1	1057	1-F 11
501841D1	289	1-C 6	502009D1	225	1-B 24	502188D1	355	1-C 13	502502D1	1025	1-F 8
501842D1	301	1-C 8	502009D1	367	1-C 14	502188D1	359	1-C 13	502502D1	1049	1-F 10
501877D1	295	1-C 7	502010D1	1093	1-F 15	502190D1	273	1-C 5	502502D1	1053	1-F 11
501881D1	1095	1-F 15	502011D1	1091	1-F 15	502191D1	1173	1-F 23	502517D1	1023	1-F 8
501883D1	113	1-B 13	502011D1	1093	1-F 15	502197D1	375	1-C 15	502517D1	1025	1-F 8
501884D1	113	1-B 13	502013D1	323	1-C 10	502198D1	393	1-C 17	502517D1	1027	1-F 8
501887D1	285	1-C 6	502014D1	323	1-C 10	502207D1	201	1-B 22	502517D1	1029	1-F 8
501887D1	287	1-C 6	502027D1	653	1-D 19	502214D1	855	1-E 15	502523D1	673	1-D 21
501896D1	1185	1-F 24	502028D1	655	1-D 19	502214D1	903	1-E 20	502523D1	675	1-D 21
501896D1	1187	1-F 24	502033D1	1043	1-F 10	502214D1	905	1-E 20	502528D1	1037	1-F 9
501898D1	1155	1-F 21	502035D1	367	1-C 14	502214D1	907	1-E 20	502528D1	1043	1-F 10
501898D1	1163	1-F 22	502035D1	369	1-C 14	502242D1	215	1-B 23	502535D1	881	1-E 18
501899D1	1161	1-F 22	502036D1	1043	1-F 10	502244D1	347	1-C 12	502536D1	881	1-E 18
501900D1	1163	1-F 22	502041D1	1099	1-F 15	502245D1	269	1-C 4	502537D1	881	1-E 18
501900D1	1167	1-F 22	502042D1	1099	1-F 15	502267D1	1037	1-F 9	502556D1	135	1-B 15
501902D1	1167	1-F 22	502043D1	1099	1-F 15	502276D1	381	1-C 16	502609D1	335	1-C 11
501902D1	1169	1-F 22	502044D1	1099	1-F 15	502279D1	1215	1-G 3	502610D1	335	1-C 11
501903D1	1167	1-F 22	502045D1	1099	1-F 15	502282D1	313	1-C 9	502611D1	335	1-C 11
501903D1	1169	1-F 22	502050D1	1013	1-F 7	502282D1	317	1-C 9	502612D1	335	1-C 11
501906D1	1167	1-F 22	502064D1	1065	1-F 12	502283D1	313	1-C 9	502619D1	1229	1-G 4
501906D1	1169	1-F 22	502072D1	269	1-C 4	502283D1	319	1-C 9	502620D1	1221	1-G 4
501907D2	1167	1-F 22	502088D1	965	1-F 2	502284D1	311	1-C 9	502640D1	1089	1-F 14
501907D2	1169	1-F 22	502088D1	967	1-F 2	502284D1	315	1-C 9	502643D1	823	1-E 12
501908D1	1157	1-F 21	502094D1	247	1-C 2	502321D1	1121	1-F 18	502644D1	825	1-E 12
501909D1	1157	1-F 21	502095D1	967	1-F 2	502321D1	1123	1-F 18	502655D1	631	1-D 17
501909D1	1165	1-F 22	502096D1	967	1-F 2	502322D1	1121	1-F 18	502679D1	819	1-E 11
501910D1	1157	1-F 21	502097D1	967	1-F 2	502322D1	1123	1-F 18	502679D1	821	1-E 12
501911D1	1157	1-F 21	502099D1	225	1-B 24	502327D1	675	1-D 21	502679D1	823	1-E 12
501912D1	1157	1-F 21	502105D1	739	1-E 3	502328D1	673	1-D 21	502679D1	825	1-E 12
501912D1	1161	1-F 22	502113D1	555	1-D 9	502338D1	1099	1-F 15	502682D1	823	1-E 12
501913D1	1161	1-F 22	502113D1	557	1-D 9	502423D1	221	1-B 24	502683D1	825	1-E 12
501914D1	1161	1-F 22	502116D1	555	1-D 9	502423D1	223	1-B 24	502757D1	303	1-C 8
501915D1	1161	1-F 22	502117D1	557	1-D 9	502423D1	225	1-B 24	502758D1	585	1-D 12
501916D1	1165	1-F 22	502118D1	561	1-D 10	502434D1	213	1-B 23	502759D1	345	1-C 12
501916D1	1169	1-F 22	502120D1	1089	1-F 14	502434D1	215	1-B 23	502760D1	187	1-B 20
501917D1	1169	1-F 22	502121D1	1089	1-F 14	502446D1	197	1-B 21	502761D1	587	1-D 12
501918D1	1169	1-F 22	502122D1	1089	1-F 14	502446D1	199	1-B 21	502762D1	593	1-D 13
501919D1	1169	1-F 22	502130D1	561	1-D 10	502446D1	203	1-B 22	502763D1	1259	1-G 7
501920D1	1169	1-F 22	502141D1	645	1-D 18	502446D1	205	1-B 22	502764D1	589	1-D 12
501921D1	1161	1-F 22	502142D1	639	1-D 17	502468D1	823	1-E 12	502765D1	271	1-C 5
501921D1	1169	1-F 22	502143D1	647	1-D 18	502468D1	825	1-E 12	502768D1	705	1-D 24
501922D1	1169	1-F 22	502144D1	641	1-D 18	502469D1	823	1-E 12	502769D1	705	1-D 24
501926D1	839	1-E 13	502145D1	649	1-D 18	502469D1	825	1-E 12	502770D1	345	1-C 12
501927D1	839	1-E 13	502146D1	643	1-D 18	502471D1	825	1-E 12	502771D1	187	1-B 20
501929D1	407	1-C 18	502147D1	651	1-D 19	502472D1	823	1-E 12	502772D1	593	1-D 13
501931D1	409	1-C 18	502148D1	653	1-D 19	502473D1	823	1-E 12	502773D1	271	1-C 5
501934D1	245	1-C 2	502149D1	655	1-D 19	502474D1	215	1-B 23	502774D1	305	1-C 8
501934D1	683	1-D 22	502158D1	707	1-D 24	502475D1	823	1-E 12	502776D1	1105	1-F 16
501935D1	245	1-C 2	502159D1	689	1-D 22	502486D1	213	1-B 23	502778D1	615	1-D 15
501935D1	359	1-C 13	502160D1	711	1-E 1	502486D1	215	1-B 23	502779D1	647	1-D 18
501936D1	245	1-C 2	502161D1	709	1-D 24	502487D1	215	1-B 23	502780D1	649	1-D 18
501940D1	355	1-C 13	502162D1	691	1-D 23	502488D1	141	1-B 16	502781D1	651	1-D 19
501940D1	363	1-C 14	502163D1	713	1-E 1	502496D1	49	1-B 6	502782D1	653	1-D 19
501941D1	361	1-C 14	502173D1	361	1-C 14	502496D1	51	1-B 7	502783D1	655	1-D 19
501942D1	99	1-B 11	502175D1	371	1-C 15	502496D1	53	1-B 7	502784D1	563	1-D 10
501944D1	1073	1-F 13	502176D1	331	1-C 11	502496D1	55	1-B 7	502785D1	875	1-E 17
501948D1	969	1-F 2	502177D1	251	1-C 3	502496D1	57	1-B 7	502786D1	691	1-D 23
501948D1	1017	1-F 7	502177D1	255	1-C 3	502496D1	59	1-B 7	502787D1	713	1-E 1
501949D1	353	1-C 13	502177D1	257	1-C 3	502496D1	61	1-B 8	502788D1	709	1-D 24

INDEX

Part No.	Page	Grid
502793D1	1181	1-F 24
502794D1	1171	1-F 23
502795D1	351	1-C 13
502796D1	1069	1-F 12
502798D1	615	1-D 15
502901D1	399	1-C 17
502905D1	1191	1-G 1
502906D1	201	1-B 22
502907D1	875	1-E 17
502913D1	709	1-D 24
502914D1	691	1-D 23
502915D1	713	1-E 1
502916D1	563	1-D 10
502918D1	955	1-F 1
502919D1	595	1-D 13
502931D1	689	1-D 22
502932D1	691	1-D 23
503583D1	135	1-B 15
503583D1	137	1-B 15
503754D1	323	1-C 10
504445D1	1095	1-F 15
505003D1	359	1-C 13
6A-5591	421	1-C 20
6A-5591	423	1-C 20
6F-2956	421	1-C 20
6F-2956	423	1-C 20
6F-2956	455	1-C 23
6F-2956	463	1-C 24
6F-2956	473	1-D 1
6F-2956	483	1-D 2
6F-7044	353	1-C 13
6F-7044	359	1-C 13
6H-3956	111	1-B 13
6H-7611	525	1-D 6
6H-7611	531	1-D 7
6H-7611	537	1-D 7
6I-3907	101	1-B 12
6I-4467	157	1-B 17
6N-3826	315	1-C 9
6N-3826	317	1-C 9
6N-3826	319	1-C 9
6S-3002	421	1-C 20
6S-3002	425	1-C 20
6T-7298	353	1-C 13
6V-0347	427	1-C 20
6V-0347	429	1-C 20
6V-0347	431	1-C 21
6V-0347	433	1-C 21
6V-0347	435	1-C 21
6V-0347	437	1-C 21
6V-0347	441	1-C 22
6V-0347	443	1-C 22
6V-0347	445	1-C 22
6V-0347	447	1-C 22
6V-0347	449	1-C 22
6V-0347	451	1-C 23
6V-0347	455	1-C 23
6V-0347	463	1-C 24
6V-0347	473	1-D 1
6V-0347	483	1-D 2
6V-0484	421	1-C 20
6V-0484	423	1-C 20
6V-0852	421	1-C 20
6V-0852	423	1-C 20
6V-0852	453	1-C 23
6V-0852	529	1-D 6
6V-0852	535	1-D 7
6V-0852	541	1-D 8
6V-3532	459	1-C 23
6V-3532	469	1-C 24
6V-3532	479	1-D 1
6V-3532	489	1-D 2
6V-3668	459	1-C 23
6V-3668	469	1-C 24
6V-3668	479	1-D 1
6V-3668	489	1-D 2
6V-3940	513	1-D 5
6V-3965	421	1-C 20
6V-3965	423	1-C 20
6V-3965	529	1-D 6
6V-3965	535	1-D 7
6V-3965	541	1-D 8
6V-3965	543	1-D 8
6V-3965	545	1-D 8
6V-3965	735	1-E 3
6V-4249	539	1-D 7
6V-4442	461	1-C 24
6V-4442	471	1-D 1
6V-4442	481	1-D 2
6V-4442	491	1-D 3
6V-5215	527	1-D 6
6V-5215	533	1-D 7
6V-5215	539	1-D 7
6V-5218	513	1-D 5
6V-5224	499	1-D 3
6V-5224	501	1-D 4
6V-5224	503	1-D 4
6V-5684	439	1-C 21
6V-5815	433	1-C 21
6V-5815	441	1-C 22
6V-5839	453	1-C 23
6V-5842	527	1-D 6
6V-5842	533	1-D 7
6V-6640	407	1-C 18
6V-6654	461	1-C 24
6V-6654	471	1-D 1
6V-6654	481	1-D 2
6V-6654	491	1-D 3
6V-7357	1033	1-F 9
6V-7357	1039	1-F 9
6V-8084	497	1-D 3
6V-8084	499	1-D 3
6V-8084	501	1-D 4
6V-8084	503	1-D 4
6V-8188	315	1-C 9
6V-8188	317	1-C 9
6V-8188	319	1-C 9
6V-8376	353	1-C 13
6V-8376	355	1-C 13
6V-8376	357	1-C 13
6V-8378	315	1-C 9
6V-8378	317	1-C 9
6V-8378	319	1-C 9
6V-8397	455	1-C 23
6V-8397	465	1-C 24
6V-8397	475	1-D 1
6V-8397	485	1-D 2
6V-8490	435	1-C 21
6V-8490	449	1-C 22
6V-8554	753	1-E 5
6V-8554	757	1-E 5
6V-8634	735	1-E 3
6V-8636	455	1-C 23
6V-8636	465	1-C 24
6V-8636	475	1-D 1
6V-8636	485	1-D 2
6V-8647	527	1-D 6
6V-8647	533	1-D 7
6V-8647	539	1-D 7
6V-8675	459	1-C 23
6V-8675	461	1-C 24
6V-8675	469	1-C 24
6V-8675	471	1-D 1
6V-8675	479	1-D 1
6V-8675	481	1-D 2
6V-8675	489	1-D 2
6V-8675	491	1-D 3
6V-8724	455	1-C 23
6V-8724	465	1-C 24
6V-8724	475	1-D 1
6V-8724	485	1-D 2
6V-9000	527	1-D 6
6V-9000	533	1-D 7
6V-9000	539	1-D 7
6V-9028	753	1-E 5
6V-9028	757	1-E 5
6V-9189	497	1-D 3
6V-9189	499	1-D 3
6V-9189	501	1-D 4
6V-9189	503	1-D 4
6V-9671	357	1-C 13
6Y-1223	493	1-D 3
6Y-5631	525	1-D 6
6Y-5631	531	1-D 7
6Y-5631	537	1-D 7
6Y-7968	525	1-D 6
6Y-7968	531	1-D 7
6Y-7968	537	1-D 7
7C-6467	497	1-D 3
7C-6467	499	1-D 3
7C-6467	501	1-D 4
7C-6467	503	1-D 4
7C-6467	529	1-D 6
7C-6467	535	1-D 7
7C-6467	541	1-D 8
7E-8923	97	1-B 11
7E-8923	103	1-B 12
7E-8925	97	1-B 11
7E-8925	103	1-B 12
7E-8926	97	1-B 11
7E-8926	103	1-B 12
7E-8928	97	1-B 11
7E-8928	103	1-B 12
7G-2510	435	1-C 21
7G-2510	437	1-C 21
7G-2510	449	1-C 22
7G-2510	451	1-C 23
7G-6945	439	1-C 21
7H-0832	455	1-C 23
7H-0832	463	1-C 24
7H-0832	473	1-D 1
7H-0832	483	1-D 2
7H-3937	1033	1-F 9
7H-3937	1039	1-F 9
7I-2272	1033	1-F 9
7J-0204	421	1-C 20
7J-0204	423	1-C 20
7L-2894	315	1-C 9
7L-2894	317	1-C 9
7L-2894	319	1-C 9
7M-8485	421	1-C 20
7M-8485	423	1-C 20
7M-8485	461	1-C 24
7M-8485	471	1-D 1
7M-8485	481	1-D 2
7M-8485	491	1-D 3
7M-8485	1263	1-G 8
7N-0296	307	1-C 8
7N-0296	309	1-C 8
7T-0093	1033	1-F 9
7T-0093	1039	1-F 9
7T-1099	453	1-C 23
7T-1099	583	1-D 12
7T-1099	971	1-F 3
7T-3267	315	1-C 9
7T-3267	317	1-C 9
7T-3267	319	1-C 9
7T-3268	315	1-C 9
7T-3268	317	1-C 9
7T-3268	319	1-C 9
7T-3271	315	1-C 9
7T-3271	317	1-C 9
7T-3271	319	1-C 9
7T-3275	315	1-C 9
7T-3275	317	1-C 9
7T-3275	319	1-C 9
7T-3279	315	1-C 9
7T-3279	317	1-C 9
7T-3279	319	1-C 9
7T-3451	315	1-C 9
7T-3451	317	1-C 9
7T-3451	319	1-C 9
7T-3454	315	1-C 9
7T-3454	317	1-C 9
7T-3454	319	1-C 9
7T-3973	317	1-C 9
7T-3974	315	1-C 9
7T-3974	317	1-C 9
7T-3974	319	1-C 9
7T-5594	427	1-C 20
7T-5594	429	1-C 20
7T-5594	431	1-C 21
7T-5594	433	1-C 21
7T-5594	435	1-C 21
7T-5594	437	1-C 21
7T-5594	441	1-C 22
7T-5594	443	1-C 22
7T-5594	445	1-C 22
7T-5594	447	1-C 22
7T-5594	449	1-C 22
7T-5594	451	1-C 23
7T-5594	527	1-D 6
7T-5594	533	1-D 7
7T-5594	539	1-D 7
7T-6799	353	1-C 13
7T-9356	525	1-D 6
7T-9356	531	1-D 7
7T-9356	537	1-D 7
7X-0562	315	1-C 9
7X-0562	317	1-C 9
7X-0562	319	1-C 9
7X-2049	1031	1-F 9
7X-2532	495	1-D 3
7X-2553	495	1-D 3
7X-2566	421	1-C 20
7X-2566	425	1-C 20
7X-2569	495	1-D 3
7X-2578	497	1-D 3
7X-2578	499	1-D 3
7X-2578	501	1-D 4
7X-2578	503	1-D 4
7X-3373	315	1-C 9
7X-3373	317	1-C 9
7X-3373	319	1-C 9
7X-3396	505	1-D 4
7X-3396	507	1-D 4
7X-3396	509	1-D 4
7X-6315	377	1-C 15
7X-6315	383	1-C 16
7X-7816	457	1-C 23
7X-7816	467	1-C 24
7X-7816	477	1-D 1
7X-7816	487	1-D 2
7Y-7256	355	1-C 13
700719352	819	1-E 11
72571005	323	1-C 10
72571006	335	1-C 11
72571008	339	1-C 11
72571022	339	1-C 11
72571023	323	1-C 10
79019518B	217	1-B 23
79019518B	219	1-B 23
8C-3075	421	1-C 20
8C-3075	425	1-C 20
8C-3428	453	1-C 23
8C-5224	457	1-C 23
8C-5224	467	1-C 24
8C-5224	477	1-D 1
8C-5224	487	1-D 2
8C-5224	495	1-D 3

Part No.	Page	Grid	Part No.	Page	Grid	Part No.	Page	Grid	Part No.	Page	Grid
8C-5224	497	1-D 3	8T-0070	471	1-D 1	8T-4139	533	1-D 7	8T-8568	315	1-C 9
8C-5224	499	1-D 3	8T-0070	481	1-D 2	8T-4139	535	1-D 7	8T-8568	317	1-C 9
8C-5224	501	1-D 4	8T-0070	491	1-D 3	8T-4139	539	1-D 7	8T-8568	319	1-C 9
8C-5224	503	1-D 4	8T-0100	497	1-D 3	8T-4139	541	1-D 8	8T-8569	315	1-C 9
8C-6354	357	1-C 13	8T-0100	499	1-D 3	8T-4139	817	1-E 11	8T-8569	317	1-C 9
8C-8514	355	1-C 13	8T-0100	501	1-D 4	8T-4141	421	1-C 20	8T-8569	319	1-C 9
8D-2256	457	1-C 23	8T-0100	503	1-D 4	8T-4141	425	1-C 20	8T-8570	315	1-C 9
8D-2256	467	1-C 24	8T-0285	479	1-D 1	8T-4141	495	1-D 3	8T-8570	317	1-C 9
8D-2256	477	1-D 1	8T-0285	489	1-D 2	8T-4167	497	1-D 3	8T-8570	319	1-C 9
8D-2256	487	1-D 2	8T-0328	315	1-C 9	8T-4167	499	1-D 3	8T-9405	355	1-C 13
8E-1143	513	1-D 5	8T-0328	317	1-C 9	8T-4167	501	1-D 4	8T-9405	357	1-C 13
8E-8276	525	1-D 6	8T-0328	319	1-C 9	8T-4167	503	1-D 4	8T-9884	315	1-C 9
8E-8276	531	1-D 7	8T-0337	355	1-C 13	8T-4179	453	1-C 23	8T-9884	317	1-C 9
8E-8276	537	1-D 7	8T-0646	439	1-C 21	8T-4183	493	1-D 3	8T-9884	319	1-C 9
8E-8277	525	1-D 6	8T-0657	459	1-C 23	8T-4189	421	1-C 20	8T-9885	315	1-C 9
8E-8277	531	1-D 7	8T-0657	469	1-C 24	8T-4189	425	1-C 20	8T-9885	317	1-C 9
8E-8277	537	1-D 7	8T-0657	479	1-D 1	8T-4195	421	1-C 20	8T-9885	319	1-C 9
8E-8310	457	1-C 23	8T-0657	489	1-D 2	8T-4195	425	1-C 20	9B-0453	353	1-C 13
8E-8310	461	1-C 24	8T-1159	455	1-C 23	8T-4195	455	1-C 23	9B-0453	359	1-C 13
8E-8310	467	1-C 24	8T-1159	465	1-C 24	8T-4195	459	1-C 23	9B-7233	315	1-C 9
8E-8310	471	1-D 1	8T-1159	475	1-D 1	8T-4195	465	1-C 24	9B-7233	317	1-C 9
8E-8310	477	1-D 1	8T-1159	485	1-D 2	8T-4195	469	1-C 24	9B-7233	319	1-C 9
8E-8310	481	1-D 2	8T-2572	427	1-C 20	8T-4195	475	1-D 1	9B-7233	353	1-C 13
8E-8310	487	1-D 2	8T-2572	429	1-C 20	8T-4195	479	1-D 1	9B-7233	355	1-C 13
8E-8310	491	1-D 3	8T-2572	431	1-C 21	8T-4195	485	1-D 2	9B-7233	357	1-C 13
8E-8316	461	1-C 24	8T-2572	433	1-C 21	8T-4195	489	1-D 2	9G-3695	201	1-B 22
8E-8316	471	1-D 1	8T-2572	435	1-C 21	8T-4195	493	1-D 3	9H-5545	439	1-C 21
8E-8316	481	1-D 2	8T-2572	437	1-C 21	8T-4195	523	1-D 6	9K-1171	457	1-C 23
8E-8316	491	1-D 3	8T-2572	441	1-C 22	8T-4195	529	1-D 6	9K-1171	467	1-C 24
8E-8652	457	1-C 23	8T-2572	443	1-C 22	8T-4195	535	1-D 7	9K-1171	477	1-D 1
8E-8652	461	1-C 24	8T-2572	445	1-C 22	8T-4195	541	1-D 8	9K-1171	487	1-D 2
8E-8652	467	1-C 24	8T-2572	447	1-C 22	8T-4196	817	1-E 11	9M-1974	513	1-D 5
8E-8652	471	1-D 1	8T-2572	449	1-C 22	8T-4200	453	1-C 23	9M-2110	513	1-D 5
8E-8652	477	1-D 1	8T-2572	451	1-C 23	8T-4205	315	1-C 9	9P-2343	435	1-C 21
8E-8652	481	1-D 2	8T-2572	527	1-D 6	8T-4205	317	1-C 9	9P-2343	449	1-C 22
8E-8652	487	1-D 2	8T-2572	533	1-D 7	8T-4205	319	1-C 9	9R-2613	971	1-F 3
8E-8652	491	1-D 3	8T-2572	539	1-D 7	8T-4219	971	1-F 3	9S-3902	453	1-C 23
8E-8653	525	1-D 6	8T-2659	355	1-C 13	8T-4223	453	1-C 23	9S-4167	177	1-B 19
8E-8653	531	1-D 7	8T-4121	455	1-C 23	8T-4223	527	1-D 6	9S-4181	421	1-C 20
8E-8653	537	1-D 7	8T-4121	459	1-C 23	8T-4223	529	1-D 6	9S-4181	423	1-C 20
8F-1434	315	1-C 9	8T-4121	465	1-C 24	8T-4223	533	1-D 7	9S-4181	461	1-C 24
8F-1434	317	1-C 9	8T-4121	469	1-C 24	8T-4223	535	1-D 7	9S-4181	471	1-D 1
8F-1434	319	1-C 9	8T-4121	475	1-D 1	8T-4223	539	1-D 7	9S-4181	481	1-D 2
8F-3469	439	1-C 21	8T-4121	479	1-D 1	8T-4223	541	1-D 8	9S-4181	491	1-D 3
8F-3469	1263	1-G 8	8T-4121	485	1-D 2	8T-4223	817	1-E 11	9S-4190	455	1-C 23
8H-1141	315	1-C 9	8T-4121	489	1-D 2	8T-4224	453	1-C 23	9S-4190	465	1-C 24
8H-1141	317	1-C 9	8T-4121	505	1-D 4	8T-4224	529	1-D 6	9S-4190	475	1-D 1
8H-1141	319	1-C 9	8T-4121	507	1-D 4	8T-4224	535	1-D 7	9S-4190	485	1-D 2
8J-8879	493	1-D 3	8T-4121	509	1-D 4	8T-4224	541	1-D 8	9S-6130	461	1-C 24
8K-0589	971	1-F 3	8T-4121	529	1-D 6	8T-4910	455	1-C 23	9S-6130	471	1-D 1
8L-2777	459	1-C 23	8T-4121	535	1-D 7	8T-4910	465	1-C 24	9S-6130	481	1-D 2
8L-2777	469	1-C 24	8T-4121	541	1-D 8	8T-4910	475	1-D 1	9S-6130	491	1-D 3
8L-2777	479	1-D 1	8T-4121	817	1-E 11	8T-4910	485	1-D 2	9S-8004	421	1-C 20
8L-2777	489	1-D 2	8T-4122	459	1-C 23	8T-5041	493	1-D 3	9S-8004	423	1-C 20
8L-9381	1031	1-F 9	8T-4122	469	1-C 24	8T-5436	429	1-C 20	9S-8004	513	1-D 5
8L-9381	1033	1-F 9	8T-4122	479	1-D 1	8T-5436	435	1-C 21	9S-8004	529	1-D 6
8L-9381	1035	1-F 9	8T-4122	489	1-D 2	8T-5436	445	1-C 22	9S-8004	535	1-D 7
8L-9381	1039	1-F 9	8T-4123	421	1-C 20	8T-5436	449	1-C 22	9S-8004	541	1-D 8
8L-9381	1041	1-F 10	8T-4123	425	1-C 20	8T-6466	459	1-C 23	9S-8005	421	1-C 20
8M-5253	513	1-D 5	8T-4123	495	1-D 3	8T-6466	469	1-C 24	9S-8005	423	1-C 20
8M-7160	421	1-C 20	8T-4136	505	1-D 4	8T-6466	479	1-D 1	9S-8005	459	1-C 23
8M-7160	423	1-C 20	8T-4136	507	1-D 4	8T-6466	489	1-D 2	9S-8005	469	1-C 24
8M-7160	461	1-C 24	8T-4136	509	1-D 4	8T-6764	111	1-B 13	9S-8005	479	1-D 1
8M-7160	471	1-D 1	8T-4137	453	1-C 23	8T-6869	453	1-C 23	9S-8005	489	1-D 2
8M-7160	481	1-D 2	8T-4137	455	1-C 23	8T-6869	529	1-D 6	9S-8006	421	1-C 20
8M-7160	491	1-D 3	8T-4137	465	1-C 24	8T-6869	535	1-D 7	9S-8006	423	1-C 20
8N-1536	1035	1-F 9	8T-4137	475	1-D 1	8T-6869	541	1-D 8	9S-8007	421	1-C 20
8P-7898	493	1-D 3	8T-4137	485	1-D 2	8T-6870	453	1-C 23	9S-8007	423	1-C 20
8S-0527	449	1-C 22	8T-4137	505	1-D 4	8T-7338	459	1-C 23	9S-8010	453	1-C 23
8S-0527	451	1-C 23	8T-4137	507	1-D 4	8T-7338	469	1-C 24	9U-0512	611	1-D 15
8S-0768	453	1-C 23	8T-4137	509	1-D 4	8T-7338	479	1-D 1	9U-7725	1261	1-G 8
8S-0768	529	1-D 6	8T-4137	817	1-E 11	8T-7338	489	1-D 2	9U-7948	1261	1-G 8
8S-0768	535	1-D 7	8T-4138	1031	1-F 9	8T-8566	315	1-C 9	9U-8669	513	1-D 5
8S-0768	541	1-D 8	8T-4139	527	1-D 6	8T-8566	317	1-C 9	9U-8875	527	1-D 6
8T-0070	461	1-C 24	8T-4139	529	1-D 6	8T-8566	319	1-C 9	9U-8875	533	1-D 7

INDEX

Part No.	Page	Grid	Part No.	Page	Grid	Part No.	Page	Grid	Part No.	Page	Grid
9U-8875	539	1-D 7									
9W-0719	525	1-D 6									
9W-0719	531	1-D 7									
9W-0719	537	1-D 7									
9W-3326	353	1-C 13									
9X-1046	355	1-C 13									
9X-1813	827	1-E 12									
9X-1813	1263	1-G 8									
9X-1813	1263	1-G 8									
9X-2044	355	1-C 13									
9X-2044	357	1-C 13									
9X-2480	1033	1-F 9									
9X-2480	1039	1-F 9									
9X-2488	1031	1-F 9									
9X-2488	1039	1-F 9									
9X-4609	453	1-C 23									
9X-4824	315	1-C 9									
9X-4824	317	1-C 9									
9X-4824	319	1-C 9									
9X-4994	1031	1-F 9									
9X-7719	421	1-C 20									
9X-7719	425	1-C 20									
9X-8256	1031	1-F 9									
9X-8256	1033	1-F 9									
9X-8256	1039	1-F 9									
9X-8268	499	1-D 3									
9X-8268	501	1-D 4									
9X-8268	503	1-D 4									
9Y-1116	93	1-B 11									

Part No.	Page	Grid	Part No.	Page	Grid	Part No.	Page	Grid	Part No.	Page	Grid

BASIC UNIT AR-MT835 - 156-5581
ROW

NO ILLUSTRATION

NOTIF

BASIC UNIT AR-MT835 - 156-5581

ROW

ITEM	NUMBER	QTY	DESCRIPTION
-	156-5581	--	BASIC UNIT AR-MT835 [A] (NOT SERVICED)
1	500744D1	1	FILM GP (MT835) (NOT SERVICED) (SEE BREAKDOWN FOR COMPONENTS)
2	172-5361	1	INSTALLATION AR-ENGINE (NOT SERVICED) (SEE BREAKDOWN FOR COMPONENTS)
3	179-1952	--	BASE AR-COMMON (NOT SERVICED) (SEE BREAKDOWN FOR COMPONENTS)
4	179-4304	--	FILLER GP-POWERTRAIN OIL (NOT SERVICED) (S/N PRIOR TO BAM40556) (SEE BREAKDOWN FOR COMPONENTS)
4	502496D1	--	BREATHER GP-POWERTRAIN (NOT SERVICED) (S/N EFF BAM40556) (SEE BREAKDOWN FOR COMPONENTS)

[A] PART OF 500033D1 BASE UNIT AR

NOTIF
PR: t05i29k58b0001

BASIC UNIT AR-MT845 - 156-5582
ROW

NO ILLUSTRATION

NOTIF

BASIC UNIT AR-MT845 - 156-5582

ROW

ITEM	NUMBER	QTY	DESCRIPTION
-	156-5582	--	BASIC UNIT AR-MT845 [A] (NOT SERVICED)
1	500745D1	1	FILM GP (MT845) (NOT SERVICED) (SEE BREAKDOWN FOR COMPONENTS)
2	172-5362	1	INSTALLATION AR-ENGINE (NOT SERVICED) (SEE BREAKDOWN FOR COMPONENTS)
3	179-1952	--	BASE AR-COMMON (NOT SERVICED) (SEE BREAKDOWN FOR COMPONENTS)
4	179-4304	--	FILLER GP-POWERTRAIN OIL (NOT SERVICED) (S/N PRIOR TO BBP40455) (SEE BREAKDOWN FOR COMPONENTS)
4	502496D1	--	BREATHER GP-POWERTRAIN (NOT SERVICED) (S/N EFF BBP40455) (SEE BREAKDOWN FOR COMPONENTS)

[A] PART OF 500034D1 BASE UNIT AR

NOTIF
PR: t05i29k58b0002

BASIC UNIT AR-MT855 - 156-5583
ROW

NO ILLUSTRATION

NOTIF

BASIC UNIT AR-MT855 - 156-5583

ROW

ITEM	NUMBER	QTY	DESCRIPTION
-	156-5583	--	BASIC UNIT AR-MT855 [A] (NOT SERVICED)
1	500746D1	1	FILM GP (MT855) (NOT SERVICED) (SEE BREAKDOWN FOR COMPONENTS)
2	172-5363	1	INSTALLATION AR-ENGINE (NOT SERVICED) (SEE BREAKDOWN FOR COMPONENTS)
3	179-1952	--	BASE AR-COMMON (NOT SERVICED) (SEE BREAKDOWN FOR COMPONENTS)
4	179-4304	--	FILLER GP-POWERTRAIN OIL (NOT SERVICED) (S/N PRIOR TO BCC40654) (SEE BREAKDOWN FOR COMPONENTS)
4	502496D1	--	BREATHER GP-POWERTRAIN (NOT SERVICED) (S/N EFF BCC40654) (SEE BREAKDOWN FOR COMPONENTS)

[A] PART OF 500035D1 BASE UNIT AR

NOTIF
PR: t05i29k58b0003

BASE UNIT AR-MT865 - 156-5584
ROW

NO ILLUSTRATION

NOTIF

BASE UNIT AR-MT865 - 156-5584

ROW

ITEM	NUMBER	QTY	DESCRIPTION
-	156-5584	--	BASE UNIT AR-MT865 [A] (NOT SERVICED)
1	179-4304	1	FILLER GP-POWER TRAIN OIL (NOT SERVICED) (S/N: PRIOR TO BDS40740) (SEE BREAKDOWN FOR COMPONENTS)
1	502496D1	1	BREATHER GP-POWERTRAIN (NOT SERVICED) (S/N: EFF BDS40740) (SEE BREAKDOWN FOR COMPONENTS)
2	197-8558	1	TANK AR-FUEL (SEE BREAKDOWN FOR COMPONENTS)
3	179-1952	--	BASE AR-COMMON (NOT SERVICED) (SEE BREAKDOWN FOR COMPONENTS)
4	172-5364	1	INSTALLATION AR-ENGINE (NOT SERVICED) (SEE BREAKDOWN FOR COMPONENTS)
5	500747D1	1	FILM GP (MT865) (NOT SERVICED) (SEE BREAKDOWN FOR COMPONENTS)

[A] PART OF 500037D1 BASE UNIT AR

NOTIF
PR: t05i29k58b0004

BASIC UNIT AR-MT835 - 179-2193
EAME

NO ILLUSTRATION

NOTIF

BASIC UNIT AR-MT835 - 179-2193
EAME

ITEM	NUMBER	QTY	DESCRIPTION
-	179-2193	--	BASIC UNIT AR-MT835 (NOT SERVICED)
1	136-5659	1	BATTERY GP (NOT SERVICED) (SEE BREAKDOWN FOR COMPONENTS)
2	179-2180	1	BASE COMMON AR (EURO) (NOT SERVICED) (SEE BREAKDOWN FOR COMPONENTS)
3	187-1741	1	INSTALLATION AR (NOT SERVICED) (SEE BREAKDOWN FOR COMPONENTS)
4	500744D1	1	FILM GP (MT835) (NOT SERVICED) (SEE BREAKDOWN FOR COMPONENTS)
5	179-4304	1	FILLER GP-POWERTRAIN OIL (NOT SERVICED) (S/N PRIOR TO BAM40556) (SEE BREAKDOWN FOR COMPONENTS)
5	502496D1	1	BREATHER GP-POWERTRAIN (NOT SERVICED) (S/N EFF BAM40556) (SEE BREAKDOWN FOR COMPONENTS)

NOTIF
PR: t05i29k58b0005

BASIC UNIT AR-MT845 - 179-2194
EAME

NO ILLUSTRATION

NOTIF

BASIC UNIT AR-MT845 - 179-2194
EAME

ITEM	NUMBER	QTY	DESCRIPTION
-	179-2194	--	BASIC UNIT AR-MT845 (NOT SERVICED)
1	136-5659	1	BATTERY GP (NOT SERVICED) (SEE BREAKDOWN FOR COMPONENTS)
2	179-2180	1	BASE COMMON AR (EURO) (NOT SERVICED) (SEE BREAKDOWN FOR COMPONENTS)
3	187-1742	1	INSTALLATION AR (NOT SERVICED) (SEE BREAKDOWN FOR COMPONENTS)
4	500745D1	1	FILM GP (MT845) (NOT SERVICED) (SEE BREAKDOWN FOR COMPONENTS)
5	179-4304	1	FILLER GP-POWERTRAIN OIL (NOT SERVICED) (S/N PRIOR TO BBP40455) (SEE BREAKDOWN FOR COMPONENTS)
5	502496D1	1	BREATHER GP-POWERTRAIN (NOT SERVICED) (S/N EFF BBP40455) (SEE BREAKDOWN FOR COMPONENTS)

NOTIF
PR: t05i29k58b0006

BASIC UNIT AR-MT855 - 179-2195
EAME

NO ILLUSTRATION

NOTIF

BASIC UNIT AR-MT855 - 179-2195
EAME

ITEM	NUMBER	QTY	DESCRIPTION
-	179-2195	--	BASIC UNIT AR-MT855 (NOT SERVICED)
1	136-5663	1	BATTERY GP (NOT SERVICED) (SEE BREAKDOWN FOR COMPONENTS)
2	179-2180	1	BASE COMMON AR (EURO) (NOT SERVICED) (SEE BREAKDOWN FOR COMPONENTS)
3	187-1743	1	INSTALLATION AR (NOT SERVICED) (SEE BREAKDOWN FOR COMPONENTS)
4	500746D1	1	FILM GP (MT855) (NOT SERVICED) (SEE BREAKDOWN FOR COMPONENTS)
5	179-4304	1	FILLER GP-POWERTRAIN OIL (NOT SERVICED) (S/N PRIOR TO BCC40654) (SEE BREAKDOWN FOR COMPONENTS)
5	502496D1	1	BREATHER GP-POWERTRAIN (NOT SERVICED) (S/N EFF BCC40654) (SEE BREAKDOWN FOR COMPONENTS)

NOTIF
PR: t05i29k58b0007

BASIC UNIT AR-MT865 - 179-2196
EAME

NO ILLUSTRATION

NOTIF

BASIC UNIT AR-MT865 - 179-2196
EAME

ITEM	NUMBER	QTY	DESCRIPTION
-	179-2196	--	BASIC UNIT AR-MT865 (NOT SERVICED)
1	136-5663	1	BATTERY GP (NOT SERVICED) (SEE BREAKDOWN FOR COMPONENTS)
2	179-2180	1	BASE COMMON AR (EURO) (NOT SERVICED) (SEE BREAKDOWN FOR COMPONENTS)
3	187-1744	1	INSTALLATION AR (NOT SERVICED) (SEE BREAKDOWN FOR COMPONENTS)
4	197-8558	1	TANK AR-FUEL (NOT SERVICED) (SEE BREAKDOWN FOR COMPONENTS)
5	500747D1	1	FILM GP (MT865) (NOT SERVICED) (SEE BREAKDOWN FOR COMPONENTS)
6	179-4304	1	FILLER GP-POWERTRAIN OIL (NOT SERVICED) (S/N: PRIOR TO BDS40740) (SEE BREAKDOWN FOR COMPONENTS)
6	502496D1	1	BREATHER GP-POWERTRAIN (NOT SERVICED) (SEE BREAKDOWN FOR COMPONENTS) (S/N: EFF BDS40740)

NOTIF
PR: t05i29k58b0008

BASE UNIT AR-MT835 - 500033D1
SPECIAL APPLICATIONS

NO ILLUSTRATION

NOTIF

BASE UNIT AR-MT835 - 500033D1
SPECIAL APPLICATIONS

ITEM	NUMBER	QTY	DESCRIPTION
-	500033D1	--	BASE UNIT AR-MT835 (NOT SERVICED)
1	156-4893	1	MIDROLLER WHL AR, WIDE (NOT SERVICED) (SEE BREAKDOWN FOR COMPONENTS)
2	156-5581	1	BASIC UNIT AR (NOT SERVICED) (SEE BREAKDOWN FOR COMPONENTS)
3	179-0853	1	HITCH AR-NON AG (NOT SERVICED) (SEE BREAKDOWN FOR COMPONENTS)
4	180-0185	1	PUMP AR-HYD (NOT SERVICED) (SEE BREAKDOWN FOR COMPONENTS)
5	184-5357	1	COUNTERWEIGHT GP-FRONT (NOT SERVICED) (SEE BREAKDOWN FOR COMPONENTS)
6	195-5968	1	WARNING GP-BACKUP (NOT SERVICED) (SEE BREAKDOWN FOR COMPONENTS)
7	-----	1	PLUG GP-SHIPPING (NOT SERVICED)
8	216-9823	1	LIGHTING GP-WARNING (NOT SERVICED) (SEE BREAKDOWN FOR COMPONENTS)
9	220-2356	1	WHEEL AR-IDLER (NOT SERVICED) (SEE BREAKDOWN FOR COMPONENTS)
10	220-2358	1	WHEEL AR-DRIVER (NOT SERVICED) (SEE BREAKDOWN FOR COMPONENTS)
11	222-7965	1	MOUNTING GP (MONITOR) (NOT SERVICED) (SEE BREAKDOWN FOR COMPONENTS)
12	500039D1	1	CABLE GP.-TOW (NOT SERVICED) (SEE BREAKDOWN FOR COMPONENTS)
13	500040D1	1	RESTRAIN GP-ROLLERFRAME (NOT SERVICED) (SEE BREAKDOWN FOR COMPONENTS)

NOTIF
PR: t05i29k58b0009

BASE UNIT AR-MT845 - 500034D1
SPECIAL APPLICATIONS

NO ILLUSTRATION

NOTIF

BASE UNIT AR-MT845 - 500034D1
SPECIAL APPLICATIONS

ITEM	NUMBER	QTY	DESCRIPTION
-	500034D1	--	BASE UNIT AR-MT845 (NOT SERVICED)
1	156-4893	1	MIDROLLER WHL AR, WIDE (NOT SERVICED) (SEE BREAKDOWN FOR COMPONENTS)
2	156-5582	1	BASIC UNIT AR (NOT SERVICED) (SEE BREAKDOWN FOR COMPONENTS)
3	179-0853	1	HITCH AR-NON AG (NOT SERVICED) (SEE BREAKDOWN FOR COMPONENTS)
4	180-0185	1	PUMP AR-HYD (NOT SERVICED) (SEE BREAKDOWN FOR COMPONENTS)
5	184-5357	1	COUNTERWEIGHT GP-FRONT (NOT SERVICED) (SEE BREAKDOWN FOR COMPONENTS)
6	195-5968	1	WARNING GP-BACKUP (NOT SERVICED) (SEE BREAKDOWN FOR COMPONENTS)
7	-----	1	PLUG GP (NOT SERVICED)
8	216-9823	1	LIGHTING GP-WARNING (NOT SERVICED) (SEE BREAKDOWN FOR COMPONENTS)
9	220-2356	1	WHEEL AR-IDLER (NOT SERVICED) (SEE BREAKDOWN FOR COMPONENTS)
10	220-2358	1	WHEEL AR-DRIVER (NOT SERVICED) (SEE BREAKDOWN FOR COMPONENTS)
11	222-7965	1	MOUNTING GP (MONITOR) (NOT SERVICED) (SEE BREAKDOWN FOR COMPONENTS)
12	500039D1	1	CABLE GP.-TOW (NOT SERVICED) (SEE BREAKDOWN FOR COMPONENTS)
13	500040D1	1	RESTRAIN GP-ROLLERFRAME (NOT SERVICED) (SEE BREAKDOWN FOR COMPONENTS)

NOTIF
PR: t05i29k58b0010

BASE UNIT AR-MT855 - 500035D1
SPECIAL APPLICATIONS

NO ILLUSTRATION

NOTIF

BASE UNIT AR-MT855 - 500035D1
SPECIAL APPLICATIONS

ITEM	NUMBER	QTY	DESCRIPTION
-	500035D1	--	BASE UNIT AR-MT855 (NOT SERVICED)
1	156-4893	1	MIDROLLER WHL AR, WIDE (NOT SERVICED) (SEE BREAKDOWN FOR COMPONENTS)
2	156-5583	1	BASIC UNIT AR (NOT SERVICED) (SEE BREAKDOWN FOR COMPONENTS)
3	179-0853	1	HITCH AR-NON AG (NOT SERVICED) (SEE BREAKDOWN FOR COMPONENTS)
4	180-0185	1	PUMP AR-HYD (NOT SERVICED) (SEE BREAKDOWN FOR COMPONENTS)
5	184-5357	1	COUNTERWEIGHT GP-FRONT (NOT SERVICED) (SEE BREAKDOWN FOR COMPONENTS)
6	195-5968	1	WARNING GP-BACKUP (NOT SERVICED) (SEE BREAKDOWN FOR COMPONENTS)
7	-----	1	PLUG GP (NOT SERVICED)
8	216-9823	1	LIGHTING GP-WARNING (NOT SERVICED) (SEE BREAKDOWN FOR COMPONENTS)
9	220-2356	1	WHEEL AR-IDLER (NOT SERVICED) (SEE BREAKDOWN FOR COMPONENTS)
10	220-2358	1	WHEEL AR-DRIVER (NOT SERVICED) (SEE BREAKDOWN FOR COMPONENTS)
11	222-7965	1	MOUNTING GP (MONITOR) (NOT SERVICED) (SEE BREAKDOWN FOR COMPONENTS)
12	500039D1	1	CABLE GP.-TOW (NOT SERVICED) (SEE BREAKDOWN FOR COMPONENTS)
13	500040D1	1	RESTRAIN GP-ROLLERFRAME (NOT SERVICED) (SEE BREAKDOWN FOR COMPONENTS)

NOTIF
PR: t05i29k58b0011

BASE UNIT AR-MT865 - 500037D1
SPECIAL APPLICATIONS

NO ILLUSTRATION

NOTIF

BASE UNIT AR-MT865 - 500037D1
SPECIAL APPLICATIONS

ITEM	NUMBER	QTY	DESCRIPTION
-	500037D1	--	BASE UNIT AR-MT865 (NOT SERVICED)
1	156-4893	1	MIDROLLER WHL AR, WIDE (NOT SERVICED) (SEE BREAKDOWN FOR COMPONENTS)
2	156-5584	1	BASIC UNIT AR (NOT SERVICED) (SEE BREAKDOWN FOR COMPONENTS)
3	179-0853	1	HITCH AR-NON AG (NOT SERVICED) (SEE BREAKDOWN FOR COMPONENTS)
4	180-0185	1	PUMP AR-HYD (NOT SERVICED) (SEE BREAKDOWN FOR COMPONENTS)
5	184-5357	1	COUNTERWEIGHT GP-FRONT (NOT SERVICED) (SEE BREAKDOWN FOR COMPONENTS)
6	195-5968	1	WARNING GP-BACKUP (NOT SERVICED) (SEE BREAKDOWN FOR COMPONENTS)
7	-----	1	PLUG GP (NOT SERVICED)
8	216-9823	1	LIGHTING GP-WARNING (NOT SERVICED) (SEE BREAKDOWN FOR COMPONENTS)
9	220-2356	1	WHEEL AR-IDLER (NOT SERVICED) (SEE BREAKDOWN FOR COMPONENTS)
10	220-2358	1	WHEEL AR-DRIVER (NOT SERVICED) (SEE BREAKDOWN FOR COMPONENTS)
11	222-7965	1	MOUNTING GP (MONITOR) (NOT SERVICED) (SEE BREAKDOWN FOR COMPONENTS)
12	500039D1	1	CABLE GP.-TOW (NOT SERVICED) (SEE BREAKDOWN FOR COMPONENTS)
13	500040D1	1	RESTRAIN GP-ROLLERFRAME (NOT SERVICED) (SEE BREAKDOWN FOR COMPONENTS)

NOTIF
PR: t05i29k58b0012

BASE COMMON AR - 179-1952
ROW & SPECIAL ONLY

NO ILLUSTRATION

NOTIF

BASE COMMON AR - 179-1952
ROW & SPECIAL ONLY

ITEM	NUMBER	QTY	DESCRIPTION
-	179-1952	--	BASE COMMON AR (NOT SERVICED) [A]
1	136-5665	1	LIGHTING GP-SIGNAL (NOT SERVICED) (SEE BREAKDOWN FOR COMPONENTS)
2	136-5668	1	WIRING GP-MACHINE (NOT SERVICED) (SEE BREAKDOWN FOR COMPONENTS)
3	156-1313	1	HOOD & GUARD GP (NOT SERVICED) (SEE BREAKDOWN FOR COMPONENTS)
4	158-2342	1	HYDRAULIC AR (NOT SERVICED) (SEE BREAKDOWN FOR COMPONENTS)
5	161-9174	1	FENDER GP (NOT SERVICED) (SEE BREAKDOWN FOR COMPONENTS)
6	163-0386	1	LINES GP-BRAKE (NOT SERVICED) (SEE BREAKDOWN FOR COMPONENTS)
7	172-8886	1	WARNING GP-SLOW MOVING VEHICLE (NOT SERVICED) (SEE BREAKDOWN FOR COMPONENTS)
8	179-1953	1	CHASSIS AR (NOT SERVICED) (SEE BREAKDOWN FOR COMPONENTS)
9	179-2185	1	PLATE & FILM GP (NOT SERVICED) (SEE BREAKDOWN FOR COMPONENTS)
10	183-6384	1	WALKWAY GP (NOT SERVICED) (SEE BREAKDOWN FOR COMPONENTS)
11	192-6350	1	CONTROL GP-PARKING BRAKE (NOT SERVICED) (SEE BREAKDOWN FOR COMPONENTS)
12	193-1547	1	LINES GP-BRAKE (COMMON) (NOT SERVICED) (SEE BREAKDOWN FOR COMPONENTS)
13	200-4400	1	CONTROL GP-SERVICE BRAKE (NOT SERVICED) (SEE BREAKDOWN FOR COMPONENTS)
14	210-7510	1	BRAKE GP-PARKING (NOT SERVICED) (SEE BREAKDOWN FOR COMPONENTS)

[A] PART OF 156-5581;156-5582;156-5583;
156-5584 BASE UNIT AR

NOTIF
PR: t05i29k58b0013

BASE COMMON AR (EURO) - 179-2180
EAME

NO ILLUSTRATION

NOTIF

BASE COMMON AR (EURO) - 179-2180
EAME

ITEM	NUMBER	QTY	DESCRIPTION
-	179-2180	--	BASE COMMON AR [A] (NOT SERVICED)
1	136-5429	1	LIGHTING GP-SIGNAL (NOT SERVICED) (SEE BREAKDOWN FOR COMPONENTS)
2	136-5669	1	WIRING GP-VEHICLE (NOT SERVICED) (SEE BREAKDOWN FOR COMPONENTS)
3	158-2342	1	HYD AR- COMMON (NOT SERVICED) (SEE BREAKDOWN FOR COMPONENTS)
4	158-5925	1	MOUNTING GP-BODY (NOT SERVICED) (SEE BREAKDOWN FOR COMPONENTS)
5	161-9173	1	HOOD GP-GUARD (NOT SERVICED) (SEE BREAKDOWN FOR COMPONENTS)
6	161-9177	1	FENDER GP (EAME) (NOT SERVICED) (SEE BREAKDOWN FOR COMPONENTS)
7	CH163-0397	1	DRAIN GP (ECOLOGY) (NOT SERVICED) (SEE BREAKDOWN FOR COMPONENTS)
8	166-4623	1	CONTROL GP MOUNTING & (NOT SERVICED) (SEE BREAKDOWN FOR COMPONENTS)
9	179-1953	1	CHASSIS AR-COM (NOT SERVICED) (SEE BREAKDOWN FOR COMPONENTS)
10	179-2261	1	FILM GP-PAINT & (NOT SERVICED) (SEE BREAKDOWN FOR COMPONENTS)
11	183-6384	1	WALKWAY GP (NOT SERVICED) (SEE BREAKDOWN FOR COMPONENTS)
12	185-8787	1	LINES GP-SERV BRAKE(B) (NOT SERVICED) (SEE BREAKDOWN FOR COMPONENTS)
13	186-2427	1	EXTENSION GP-FENDER (NOT SERVICED) (SEE BREAKDOWN FOR COMPONENTS)
14	187-8609	1	GUARD GP (NOT SERVICED) (SEE BREAKDOWN FOR COMPONENTS)
15	192-6350	1	CONTROL GP-PARK BRAKE (NOT SERVICED) (SEE BREAKDOWN FOR COMPONENTS)
16	192-6360	1	CONTROL GP-BRAKE (Q) (NOT SERVICED) (SEE BREAKDOWN FOR COMPONENTS)
17	193-1547	1	LINES GP-SERV BRAKE (A) (NOT SERVICED) (SEE BREAKDOWN FOR COMPONENTS)
18	200-4320	1	SUPPORT GP-LINES (NOT SERVICED) (SEE BREAKDOWN FOR COMPONENTS)
19	200-4400	1	CONTROL GP-BRAKE(A) (NOT SERVICED) (SEE BREAKDOWN FOR COMPONENTS)
20	210-4350	1	ENCLOSURE GP (CAT) (NOT SERVICED) (SEE BREAKDOWN FOR COMPONENTS)
21	221-8534	1	HANDRAIL GP (NOT SERVICED) (SEE BREAKDOWN FOR COMPONENTS)
22	208-3021	1	GUARD GP-AXLE (SEE BREAKDOWN FOR COMPONENTS)

[A] PART OF 179-2193; 179-2194; 179-2195; 179-2196 BASE UNIT AR

NOTIF
PR: t05i29k58b0014

INSTALLATION AR-MT835 - 172-5361
ROW & SPECIAL APPLICATIONS

NO ILLUSTRATION

NOTIF

INSTALLATION AR-MT835 - 172-5361

ROW & SPECIAL APPLICATIONS

ITEM	NUMBER	QTY	DESCRIPTION
-	172-5361	--	INSTALLATION AR-MT835 [A] (NOT SERVICED)
1	163-0383	1	SHAFT GP-INPUT (NOT SERVICED) (SEE BREAKDOWN FOR COMPONENTS)
2	172-5334	1	MOUNTING GP-ENGINE (NOT SERVICED) (SEE BREAKDOWN FOR COMPONENTS)
3	172-5336	1	MUFFLER GP (NOT SERVICED) (SEE BREAKDOWN FOR COMPONENTS)
4	172-5338	1	CLEANER GP-AIR (A) (NOT SERVICED) (SEE BREAKDOWN FOR COMPONENTS)
5	172-5342	1	LINES GP-AIR (NOT SERVICED) (SEE BREAKDOWN FOR COMPONENTS)
6	172-5343	1	LINES GP-A/C (NOT SERVICED) (SEE BREAKDOWN FOR COMPONENTS)
7	172-5345	1	LINES GP-COOLANT (NOT SERVICED) (SEE BREAKDOWN FOR COMPONENTS)
8	172-6945	1	ENGINE AR-COMPL (340HP) (ORDER COMPONENTS THRU CAT ENG DIV.)
9	185-2237	1	PULLEY GP (NOT SERVICED) (SEE BREAKDOWN FOR COMPONENTS)
10	186-1671	1	AID GP-ETHER STARTING (NOT SERVICED) (SEE BREAKDOWN FOR COMPONENTS)
11	187-1791	1	DRIVE GP-ACCESSORY (NOT SERVICED) (SEE BREAKDOWN FOR COMPONENTS)
12	187-1792	1	MOUNTING GP-COMPRESSOR (NOT SERVICED) (SEE BREAKDOWN FOR COMPONENTS)
13	190-1482	1	COOLER GP-MTG & (NOT SERVICED) (SEE BREAKDOWN FOR COMPONENTS)
14	194-7966	1	TANK GP-EXP & COOLANT (NOT SERVICED) (SEE BREAKDOWN FOR COMPONENTS)
15	198-0188	1	FILTER GP-WATER (NOT SERVICED) (SEE BREAKDOWN FOR COMPONENTS)
16	206-6397	1	FAN GP-ENGINE (NOT SERVICED) (SEE BREAKDOWN FOR COMPONENTS)
17	206-6987	1	MOUNTING GP-ALTERNATOR (SEE BREAKDOWN FOR COMPONENTS)
18	208-0090	1	MOTOR GP-ELECTRIC (SEE BREAKDOWN FOR COMPONENTS)
19	212-4444	1	LINES GP.- DUST EJECTOR (NOT SERVICED) (SEE BREAKDOWN FOR COMPONENTS)
20	213-9315	1	LINES GP-FUEL (NOT SERVICED) (SEE BREAKDOWN FOR COMPONENTS)

[A] PART OF 156-5581 BASIC UNIT AR

NOTIF
PR: t05i29k58b0015

INSTALLATION AR-MT835 - 187-1741
EAME ONLY

NO ILLUSTRATION

NOTIF

INSTALLATION AR-MT835 - 187-1741

EAME ONLY

ITEM	NUMBER	QTY	DESCRIPTION
-	187-1741	--	INSTALLATION AR-MT835 [A] (NOT SERVICED)
1	163-0383	1	SHAFT GP-INPUT (NOT SERVICED) (SEE BREAKDOWN FOR COMPONENTS)
2	172-5334	1	MOUNTING GP-ENGINE (NOT SERVICED) (SEE BREAKDOWN FOR COMPONENTS)
3	172-5336	1	MUFFLER GP (NOT SERVICED) (SEE BREAKDOWN FOR COMPONENTS)
4	172-5338	1	CLEANER GP-AIR (A) (NOT SERVICED) (SEE BREAKDOWN FOR COMPONENTS)
5	172-5342	1	LINES GP-AIR (NOT SERVICED) (SEE BREAKDOWN FOR COMPONENTS)
6	172-5343	1	LINES GP-A/C (NOT SERVICED) (SEE BREAKDOWN FOR COMPONENTS)
7	172-5345	1	LINES GP-COOLANT (NOT SERVICED) (SEE BREAKDOWN FOR COMPONENTS)
8	172-6945	1	ENGINE AR-COMPL (340HP) (ORDER COMPONENTS THRU CAT ENG DIV.)
9	185-2237	1	PULLEY GP (NOT SERVICED) (SEE BREAKDOWN FOR COMPONENTS)
10	186-1671	1	AID GP-ETHER STARTING (NOT SERVICED) (SEE BREAKDOWN FOR COMPONENTS)
11	187-1791	1	DRIVE GP-ACCESSORY (NOT SERVICED) (SEE BREAKDOWN FOR COMPONENTS)
12	187-1792	1	MOUNTING GP-COMPRESSOR (NOT SERVICED) (SEE BREAKDOWN FOR COMPONENTS)
13	190-1482	1	COOLER GP-MTG & (NOT SERVICED) (SEE BREAKDOWN FOR COMPONENTS)
14	194-7966	1	TANK GP-EXP & COOLANT (NOT SERVICED) (SEE BREAKDOWN FOR COMPONENTS)
15	198-0188	1	FILTER GP-WATER (NOT SERVICED) (SEE BREAKDOWN FOR COMPONENTS)
16	206-6397	1	FAN GP-ENGINE (NOT SERVICED) (SEE BREAKDOWN FOR COMPONENTS)
17	206-6987	1	MOUNTING GP-ALTERNATOR (SEE BREAKDOWN FOR COMPONENTS)
18	208-0090	1	MOTOR GP-ELECTRIC (SEE BREAKDOWN FOR COMPONENTS)
19	212-4444	1	LINES GP.- DUST EJECTOR (NOT SERVICED) (SEE BREAKDOWN FOR COMPONENTS)
20	213-9315	1	LINES GP-FUEL (NOT SERVICED) (SEE BREAKDOWN FOR COMPONENTS)

[A] PART OF 179-2193 BASIC UNIT AR

NOTIF
PR: t05i29k58b0016

INSTALLATION AR-MT845 - 172-5362
ROW & SPECIAL APPLICATIONS

NO ILLUSTRATION

NOTIF

ITEM	NUMBER	QTY	DESCRIPTION
-	172-5362	--	INSTALLATION AR-MT845 [A] (NOT SERVICED)
1	163-0383	1	SHAFT GP-INPUT (NOT SERVICED) (SEE BREAKDOWN FOR COMPONENTS)
2	172-5334	1	MOUNTING GP-ENGINE (NOT SERVICED) (SEE BREAKDOWN FOR COMPONENTS)
3	172-5336	1	MUFFLER GP (NOT SERVICED) (SEE BREAKDOWN FOR COMPONENTS)
4	172-5338	1	CLEANER GP-AIR (A) (NOT SERVICED) (SEE BREAKDOWN FOR COMPONENTS)
5	172-5342	1	LINES GP-AIR (NOT SERVICED) (SEE BREAKDOWN FOR COMPONENTS)
6	172-5343	1	LINES GP-A/C (NOT SERVICED) (SEE BREAKDOWN FOR COMPONENTS)
7	172-5345	1	LINES GP-COOLANT (NOT SERVICED) (SEE BREAKDOWN FOR COMPONENTS)
8	172-6946	1	ENGINE AR-COMPL (380HP) (ORDER COMPONENTS THRU CAT ENG DIV.)
9	185-2237	1	PULLEY GP (NOT SERVICED) (SEE BREAKDOWN FOR COMPONENTS)
10	186-1671	1	AID GP-ETHER STARTING (NOT SERVICED) (SEE BREAKDOWN FOR COMPONENTS)
11	187-1791	1	DRIVE GP-ACCESSORY (NOT SERVICED) (SEE BREAKDOWN FOR COMPONENTS)
12	187-1792	1	MOUNTING GP-COMPRESSOR (NOT SERVICED) (SEE BREAKDOWN FOR COMPONENTS)
13	190-1482	1	COOLER GP-MTG & (NOT SERVICED) (SEE BREAKDOWN FOR COMPONENTS)
14	194-7966	1	TANK GP-EXP & COOLANT (NOT SERVICED) (SEE BREAKDOWN FOR COMPONENTS)
15	198-0188	1	FILTER GP-WATER (NOT SERVICED) (SEE BREAKDOWN FOR COMPONENTS)
16	206-6397	1	FAN GP-ENGINE (NOT SERVICED) (SEE BREAKDOWN FOR COMPONENTS)
17	206-6987	1	MOUNTING GP-ALTERNATOR (SEE BREAKDOWN FOR COMPONENTS)
18	208-0090	1	MOTOR GP-ELECTRIC (SEE BREAKDOWN FOR COMPONENTS)
19	212-4444	1	LINES GP.- DUST EJECTOR (NOT SERVICED) (SEE BREAKDOWN FOR COMPONENTS)
20	213-9315	1	LINES GP-FUEL (NOT SERVICED) (SEE BREAKDOWN FOR COMPONENTS)

[A] PART OF 156-5582 BASIC UNIT AR

NOTIF
PR: t05i29k58b0017

INSTALLATION AR-MT845 - 187-1742
EAME ONLY

NO ILLUSTRATION

NOTIF

INSTALLATION AR-MT845 - 187-1742

EAME ONLY

ITEM	NUMBER	QTY	DESCRIPTION
-	187-1742	--	INSTALLATION AR-MT845 [A] (NOT SERVICED)
1	163-0383	1	SHAFT GP-INPUT (NOT SERVICED) (SEE BREAKDOWN FOR COMPONENTS)
2	172-5334	1	MOUNTING GP-ENGINE (NOT SERVICED) (SEE BREAKDOWN FOR COMPONENTS)
3	172-5336	1	MUFFLER GP (NOT SERVICED) (SEE BREAKDOWN FOR COMPONENTS)
4	172-5338	1	CLEANER GP-AIR (A) (NOT SERVICED) (SEE BREAKDOWN FOR COMPONENTS)
5	172-5342	1	LINES GP-AIR (NOT SERVICED) (SEE BREAKDOWN FOR COMPONENTS)
6	172-5343	1	LINES GP-A/C (NOT SERVICED) (SEE BREAKDOWN FOR COMPONENTS)
7	172-5345	1	LINES GP-COOLANT (NOT SERVICED) (SEE BREAKDOWN FOR COMPONENTS)
8	172-6946	1	ENGINE AR-COMPL (380HP) (ORDER COMPONENTS THRU CAT ENG DIV.)
9	185-2237	1	PULLEY GP (NOT SERVICED) (SEE BREAKDOWN FOR COMPONENTS)
10	186-1671	1	AID GP-ETHER STARTING (NOT SERVICED) (SEE BREAKDOWN FOR COMPONENTS)
11	187-1791	1	DRIVE GP-ACCESSORY (NOT SERVICED) (SEE BREAKDOWN FOR COMPONENTS)
12	187-1792	1	MOUNTING GP-COMPRESSOR (NOT SERVICED) (SEE BREAKDOWN FOR COMPONENTS)
13	190-1482	1	COOLER GP-MTG & (NOT SERVICED) (SEE BREAKDOWN FOR COMPONENTS)
14	194-7966	1	TANK GP-EXP & COOLANT (NOT SERVICED) (SEE BREAKDOWN FOR COMPONENTS)
15	198-0188	1	FILTER GP-WATER (NOT SERVICED) (SEE BREAKDOWN FOR COMPONENTS)
16	206-6397	1	FAN GP-ENGINE (NOT SERVICED) (SEE BREAKDOWN FOR COMPONENTS)
17	206-6987	1	MOUNTING GP-ALTERNATOR (SEE BREAKDOWN FOR COMPONENTS)
18	208-0090	1	MOTOR GP-ELECTRIC (SEE BREAKDOWN FOR COMPONENTS)
19	212-4444	1	LINES GP-DUST EJECTOR (NOT SERVICED) (SEE BREAKDOWN FOR COMPONENTS)
20	213-9315	1	LINES GP-FUEL (NOT SERVICED) (SEE BREAKDOWN FOR COMPONENTS)

[A] PART OF 179-2194 BASIC UNIT AR

NOTIF
PR: t05i29k58b0018

INSTALLATION AR-MT855 - 172-5363
ROW & SPECIAL APPLICATIONS

NO ILLUSTRATION

NOTIF

INSTALLATION AR-MT855 - 172-5363

ROW & SPECIAL APPLICATIONS

ITEM	NUMBER	QTY	DESCRIPTION
-	172-5363	--	INSTALLATION AR-MT855 [A] (NOT SERVICED)
1	163-0384	1	SHAFT GP-INPUT (NOT SERVICED) (SEE BREAKDOWN FOR COMPONENTS)
2	172-5333	1	MOUNTING GP-ENGINE (NOT SERVICED) (SEE BREAKDOWN FOR COMPONENTS)
3	172-5335	1	MUFFLER GP (NOT SERVICED) (SEE BREAKDOWN FOR COMPONENTS)
4	172-5337	1	CLEANER GP-AIR (A) (NOT SERVICED) (SEE BREAKDOWN FOR COMPONENTS)
5	172-5341	1	LINES GP-AIR (NOT SERVICED) (SEE BREAKDOWN FOR COMPONENTS)
6	172-5343	1	LINES GP-A/C (NOT SERVICED) (SEE BREAKDOWN FOR COMPONENTS)
7	172-5344	1	LINES GP-COOLANT (NOT SERVICED) (SEE BREAKDOWN FOR COMPONENTS)
8	235-4672	1	ENGINE AR-COMPL (450 HP) (ORDER COMPONENTS THRU CAT ENG DIV.)
9	185-2239	1	PULLEY GP (NOT SERVICED) (SEE BREAKDOWN FOR COMPONENTS)
10	187-1740	1	AID GP-ETHER STARTING (NOT SERVICED) (SEE BREAKDOWN FOR COMPONENTS)
11	187-1791	1	DRIVE GP-ACCESSORY (NOT SERVICED) (SEE BREAKDOWN FOR COMPONENTS)
12	187-1792	1	MOUNTING GP-COMPRESSOR (NOT SERVICED) (SEE BREAKDOWN FOR COMPONENTS)
13	190-1482	1	COOLER GP-MTG & (NOT SERVICED) (SEE BREAKDOWN FOR COMPONENTS)
14	185-2220	1	TANK GP-EXP & COOLANT (NOT SERVICED) (SEE BREAKDOWN FOR COMPONENTS)
15	198-0187	1	FILTER GP-WATER (NOT SERVICED) (SEE BREAKDOWN FOR COMPONENTS)
16	206-6397	1	FAN GP-ENGINE (NOT SERVICED) (SEE BREAKDOWN FOR COMPONENTS)
17	206-6987	1	MOUNTING GP-ALTERNATOR (SEE BREAKDOWN FOR COMPONENTS)
18	180-2924	1	MOTOR GP-ELECTRIC (SEE BREAKDOWN FOR COMPONENTS)
19	197-4849	1	LINES GP-DUST EJECTOR (NOT SERVICED) (SEE BREAKDOWN FOR COMPONENTS)
20	179-2183	1	LINES GP-FUEL (NOT SERVICED) (SEE BREAKDOWN FOR COMPONENTS)

[A] PART OF 156-5583 BASIC UNIT AR

NOTIF
PR: t05i29k58b0019

INSTALLATION AR-MT855 - 187-1743

EAME ONLY

NO ILLUSTRATION

NOTIF

INSTALLATION AR-MT855 - 187-1743

EAME ONLY

ITEM	NUMBER	QTY	DESCRIPTION
-	187-1743	--	INSTALLATION AR-MT855 [A] (NOT SERVICED)
1	163-0384	1	SHAFT GP-INPUT (NOT SERVICED) (SEE BREAKDOWN FOR COMPONENTS)
2	172-5333	1	MOUNTING GP-ENGINE (NOT SERVICED) (SEE BREAKDOWN FOR COMPONENTS)
3	172-5335	1	MUFFLER GP (NOT SERVICED) (SEE BREAKDOWN FOR COMPONENTS)
4	172-5337	1	CLEANER GP-AIR (A) (NOT SERVICED) (SEE BREAKDOWN FOR COMPONENTS)
5	172-5341	1	LINES GP-AIR (NOT SERVICED) (SEE BREAKDOWN FOR COMPONENTS)
6	172-5343	1	LINES GP-A/C (NOT SERVICED) (SEE BREAKDOWN FOR COMPONENTS)
7	172-5344	1	LINES GP-COOLANT (NOT SERVICED) (SEE BREAKDOWN FOR COMPONENTS)
8	235-4672	1	ENGINE AR-COMPL (435HP) (ORDER COMPONENTS THRU CAT ENG DIV.)
9	179-2183	1	LINES GP-FUEL (NOT SERVICED) (SEE BREAKDOWN FOR COMPONENTS)
10	180-2924	1	MOTOR GP-ELECTRIC (SEE BREAKDOWN FOR COMPONENTS)
11	185-2220	1	TANK GP-EXP & COOLANT (NOT SERVICED) (SEE BREAKDOWN FOR COMPONENTS)
12	185-2239	1	PULLEY GP (NOT SERVICED) (SEE BREAKDOWN FOR COMPONENTS)
13	187-1740	1	AID GP-ETHER STARTING (NOT SERVICED) (SEE BREAKDOWN FOR COMPONENTS)
14	187-1791	1	DRIVE GP-ACCESSORY (NOT SERVICED) (SEE BREAKDOWN FOR COMPONENTS)
15	187-1792	1	MOUNTING GP-COMPRESSOR (NOT SERVICED) (SEE BREAKDOWN FOR COMPONENTS)
16	190-1482	1	COOLER GP-MTG & (NOT SERVICED) (SEE BREAKDOWN FOR COMPONENTS)
17	197-4849	1	LINES GP.- DUST EJECTOR (NOT SERVICED) (SEE BREAKDOWN FOR COMPONENTS)
18	198-0187	1	FILTER GP-WATER (NOT SERVICED) (SEE BREAKDOWN FOR COMPONENTS)
19	206-6397	1	FAN GP-ENGINE (NOT SERVICED) (SEE BREAKDOWN FOR COMPONENTS)
20	206-6987	1	MOUNTING GP-ALTERNATOR (SEE BREAKDOWN FOR COMPONENTS)

[A] PART OF 179-2195 BASIC UNIT AR

NOTIF
PR: t05i29k58b0020

INSTALLATION AR-MT865 - 172-5364
ROW & SPECIAL APPLICATIONS

NO ILLUSTRATION

NOTIF

INSTALLATION AR-MT865 - 172-5364

ROW & SPECIAL APPLICATIONS

ITEM	NUMBER	QTY	DESCRIPTION
-	172-5364	--	INSTALLATION AR-MT865 [A] (NOT SERVICED)
1	163-0384	1	SHAFT GP-INPUT (NOT SERVICED) (SEE BREAKDOWN FOR COMPONENTS)
2	172-5333	1	MOUNTING GP-ENGINE (NOT SERVICED) (SEE BREAKDOWN FOR COMPONENTS)
3	172-5335	1	MUFFLER GP (NOT SERVICED) (SEE BREAKDOWN FOR COMPONENTS)
4	172-5337	1	CLEANER GP-AIR (A) (NOT SERVICED) (SEE BREAKDOWN FOR COMPONENTS)
5	172-5341	1	LINES GP-AIR (NOT SERVICED) (SEE BREAKDOWN FOR COMPONENTS)
6	172-5343	1	LINES GP-A/C (NOT SERVICED) (SEE BREAKDOWN FOR COMPONENTS)
7	172-5344	1	LINES GP-COOLANT (NOT SERVICED) (SEE BREAKDOWN FOR COMPONENTS)
8	235-4673	1	ENGINE AR-COMPL (500 HP) (ORDER COMPONENTS THRU CAT ENG DIV.)
9	185-2240	1	PULLEY GP (NOT SERVICED) (SEE BREAKDOWN FOR COMPONENTS)
10	187-1740	1	AID GP-ETHER STARTING (NOT SERVICED) (SEE BREAKDOWN FOR COMPONENTS)
11	187-1791	1	DRIVE GP-ACCESSORY (NOT SERVICED) (SEE BREAKDOWN FOR COMPONENTS)
12	187-1792	1	MOUNTING GP-COMPRESSOR (NOT SERVICED) (SEE BREAKDOWN FOR COMPONENTS)
13	190-1482	1	COOLER GP-MTG & (NOT SERVICED) (SEE BREAKDOWN FOR COMPONENTS)
14	185-2220	1	TANK GP-EXP & COOLANT (NOT SERVICED) (SEE BREAKDOWN FOR COMPONENTS)
15	198-0187	1	FILTER GP-WATER (NOT SERVICED) (SEE BREAKDOWN FOR COMPONENTS)
16	206-6397	1	FAN GP-ENGINE (NOT SERVICED) (SEE BREAKDOWN FOR COMPONENTS)
17	206-6987	1	MOUNTING GP-ALTERNATOR (SEE BREAKDOWN FOR COMPONENTS)
18	180-2924	1	MOTOR GP-ELECTRIC (SEE BREAKDOWN FOR COMPONENTS)
19	197-4849	1	LINES GP.- DUST EJECTOR (NOT SERVICED) (SEE BREAKDOWN FOR COMPONENTS)
20	179-2183	1	LINES GP-FUEL (NOT SERVICED) (SEE BREAKDOWN FOR COMPONENTS)

[A] PART OF 156-5583 BASIC UNIT AR

NOTIF
PR: t05i29k58b0021

INSTALLATION AR-MT865 - 187-1744
EAME ONLY

NO ILLUSTRATION

NOTIF

INSTALLATION AR-MT865 - 187-1744

EAME ONLY

ITEM	NUMBER	QTY	DESCRIPTION
-	187-1744	--	INSTALLATION AR-MT865 [A] (NOT SERVICED)
1	163-0384	1	SHAFT GP-INPUT (NOT SERVICED) (SEE BREAKDOWN FOR COMPONENTS)
2	172-5333	1	MOUNTING GP-ENGINE (NOT SERVICED) (SEE BREAKDOWN FOR COMPONENTS)
3	172-5335	1	MUFFLER GP (NOT SERVICED) (SEE BREAKDOWN FOR COMPONENTS)
4	172-5337	1	CLEANER GP-AIR (A) (NOT SERVICED) (SEE BREAKDOWN FOR COMPONENTS)
5	172-5341	1	LINES GP-AIR (NOT SERVICED) (SEE BREAKDOWN FOR COMPONENTS)
6	172-5343	1	LINES GP-A/C (NOT SERVICED) (SEE BREAKDOWN FOR COMPONENTS)
7	172-5344	1	LINES GP-COOLANT (NOT SERVICED) (SEE BREAKDOWN FOR COMPONENTS)
8	235-4673	1	ENGINE AR-COMPL (500HP) (ORDER COMPONENTS THRU CAT ENG DIV.)
9	179-2183	1	LINES GP-FUEL (NOT SERVICED) (SEE BREAKDOWN FOR COMPONENTS)
10	180-2924	1	MOTOR GP-ELECTRIC (SEE BREAKDOWN FOR COMPONENTS)
11	185-2220	1	TANK GP-EXP & COOLANT (NOT SERVICED) (SEE BREAKDOWN FOR COMPONENTS)
12	185-2240	1	PULLEY GP (NOT SERVICED) (SEE BREAKDOWN FOR COMPONENTS)
13	187-1740	1	AID GP-ETHER STARTING (NOT SERVICED) (SEE BREAKDOWN FOR COMPONENTS)
14	187-1791	1	DRIVE GP-ACCESSORY (NOT SERVICED) (SEE BREAKDOWN FOR COMPONENTS)
15	187-1792	1	MOUNTING GP-COMPRESSOR (NOT SERVICED) (SEE BREAKDOWN FOR COMPONENTS)
16	190-1482	1	COOLER GP-MTG & (NOT SERVICED) (SEE BREAKDOWN FOR COMPONENTS)
17	197-4849	1	LINES GP-DUST EJECTOR (NOT SERVICED) (SEE BREAKDOWN FOR COMPONENTS)
18	198-0187	1	FILTER GP-WATER (NOT SERVICED) (SEE BREAKDOWN FOR COMPONENTS)
19	206-6397	1	FAN GP-ENGINE (NOT SERVICED) (SEE BREAKDOWN FOR COMPONENTS)
20	206-6987	1	MOUNTING GP-ALTERNATOR (SEE BREAKDOWN FOR COMPONENTS)

[A] PART OF 179-2196 BASIC UNIT AR

NOTIF
PR: t05i29k58b0022

AIR COMPRESSOR GP - 180-2937

MT835 & MT845

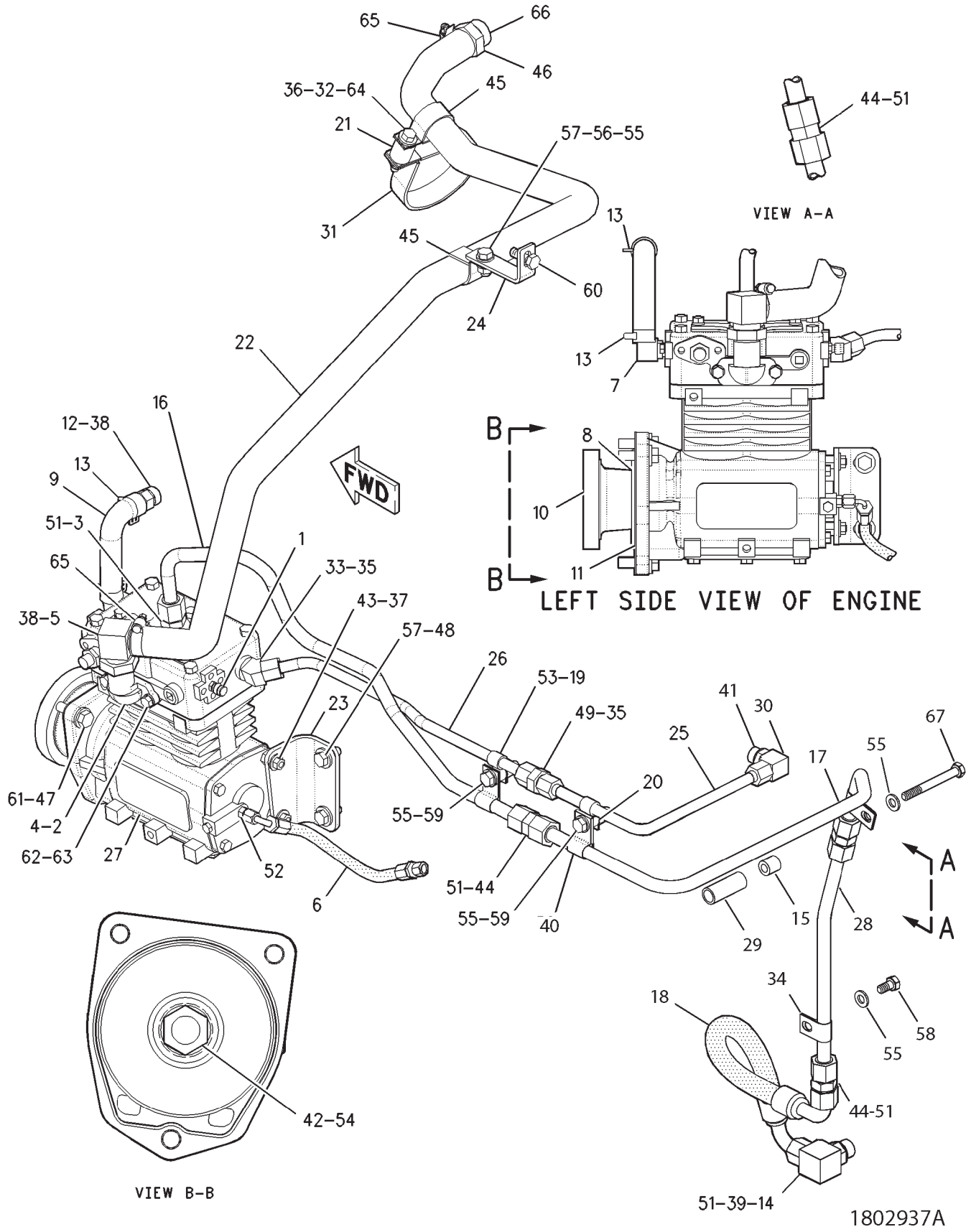

AIR COMPRESSOR GP - 180-2937

MT835 & MT845

ITEM	NUMBER	QTY	DESCRIPTION
-	180-2937	--	AIR COMPRESSOR GP [A] (NOT SERVICED)
1	CH5F-5434	1	VALVE-RELIEF
2	400692X1	1	ELBOW
3	400693X1	1	ADAPTER-STR,0.50MNPTFX-10MORFS
4	400697X1	1	GASKET-AIR INLET
5	400704X1	1	CONNECTOR-90DEG 10 STORX25.4 OD BARB
6	9Y-1116	1	HOSE-END
7	CH032-3631	1	ELBOW
8	117-0221	1	RING-PILOT
9	CH128-0331	1	HOSE
10	128-0420	1	GEAR (42 TEETH)
11	CH129-2181	1	SEAL-INTEGRAL
12	CH131-2171	1	CONNECTOR (10STORX15.9BARB)
13	CH172-4702	2	CLAMP
14	CH184-8029	1	ELBOW AS.-90DEG 10 ORFS X M22
	400322X1	1	SEAL-O-RING (19.28IDX1.78DIA)
	400366X1	1	SEAL-O-RING (22.5ODX1.78DIA)
	187-9009	1	RING-RETAINING
15	CH2B-0941	1	SPACER (19ODX10.5IDX19)
16	197-0749	1	TUBE
17	500516D1	1	TUBE
18	198-1962	1	HOSE
19	CH200-4328	2	SPACER (11X19.05X10.5)
20	CH200-8649	2	SPACER (.5X.75X.56 IN THK)
21	212-3597	1	SPACER
22	212-3839	1	HOSE-AIR INLET
23	215-8050	1	BRACKET
24	215-8051	1	BRACKET
25	215-8052	1	TUBE
26	215-8054	1	TUBE
27	215-8055	1	AIR COMPRESSOR GP (SEE BREAKDOWN FOR COMPONENTS)
28	218-2807	1	TUBE
29	213-2589	1	SPACER
30	CH118-4728	1	ELBOW-90DEG (8FLAR37X8STOR)
31	CH125-7131	1	CLIP
32	CH2K-4973	1	LOCKNUT (3/8-16)
33	CH3E-7449	1	ELBOW
34	CH4B-9302	1	CLIP
35	CH4K-2039	2	SEAL-O-RING
36	CH5P-1075	2	WASHER-HARD (10.2X22.5X3)
37	400599X1	2	WASHER-HARD (M8X20.5X2)
38	400674X1	2	SEAL-O-RING
39	400675X1	1	SEAL-O-RING

CONTINUED

[A] PART OF:
185-8860;192-6400 BRAKE AR-AIR
190-0439;210-5703 TANK AR-AIR

1802937A
PR: t05i29k58b0023

AIR COMPRESSOR GP - 180-2937

MT835 & MT845

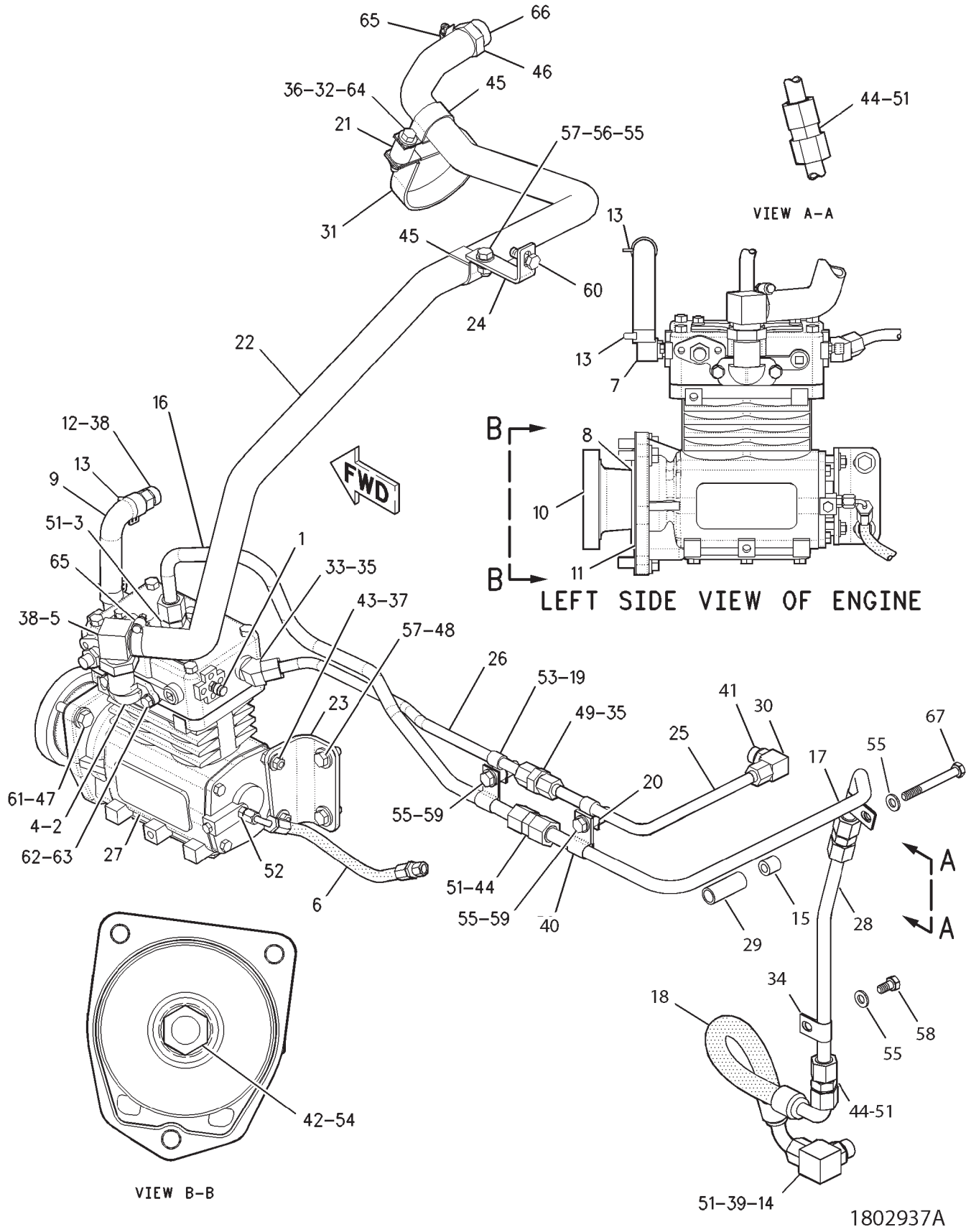

AIR COMPRESSOR GP - 180-2937

MT835 & MT845

ITEM	NUMBER	QTY	DESCRIPTION
-	180-2937	--	AIR COMPRESSOR GP [A] (NOT SERVICED)
40	CH4K-8302	2	CLAMP-LOOP (15.88ID W/COAT)
41	400678X1	1	SEAL-O-RING (16.36IDX2.21DIA)
42	400681X1	1	NUT-FULL (M20X2.50)
43	400682X1	2	NUT (5/16-18)
44	400684X1	3	UNION-FACE SEAL
45	400689X1	2	CLIP-LOOP (38.1 ID)
46	400376X1	1	SEAL-O-RING (29.74IDX2.95DIA)
47	400201X1	3	BOLT (M12X1.75)
48	CH7X-7729	2	WASHER (11X25X3)
49	CH8C-7306	1	ADAPTER
50	CH8F-8513	1	CLIP
51	CH8L-2746	8	SEAL-O-RING
52	CH8L-6557	1	CONNECTOR
53	CH8M-2770	2	CLIP
54	CH8T-3282	1	WASHER-HARD (22X35X3.5)
55	400287X1	7	WASHER-HARD (11X21X2.5)
56	WR522218	1	NUT (M10X1.5)
57	400039X1	3	BOLT (M10X1.5X25MM)
58	400040X1	1	BOLT (M10X1.5X20MM)
59	400049X1	2	BOLT (M10X1.5X45MM)
60	400058X1	1	BOLT (M10X1.5X30MM)
61	400357X1	3	WASHER-HARD (M12X25.5X3)
62	400339X1	2	WASHER-HARD (8.8X16X2)
63	400249X1	2	BOLT (5/16-18X.875 IN)
64	400250X1	1	BOLT (3/8-16X2.25 IN)
65	400701X1	2	CLAMP-HOSE
66	400703X1	1	CONNECTOR AS (16STORX25.4BARB)
	400376X1	1	SEAL-O-RING (29.74IDX2.95DIA)
67	400225X1	2	BOLT (M10X1.5X90MM)

[A] PART OF:
185-8860;192-6400 BRAKE AR-AIR
190-0439;210-5703 TANK AR-AIR

1802937A
PR: t05i29k58b0023

AIR COMPRESSOR GP - 215-8055

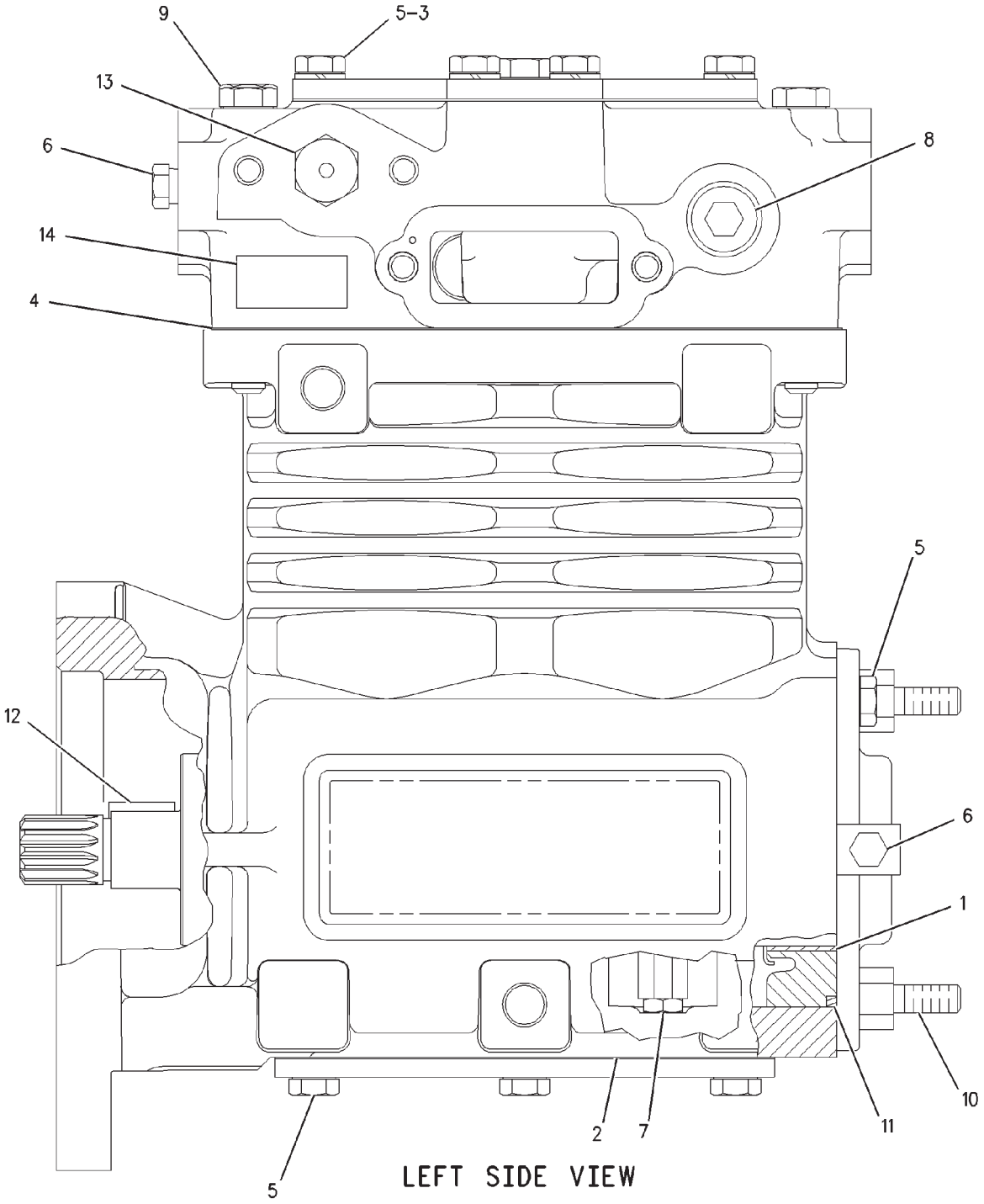

00783724

AIR COMPRESSOR GP - 215-8055

ITEM	NUMBER	QTY	DESCRIPTION
-	215-8055	--	AIR COMPRESSOR GP [A]
1	CH7C-6178	2	BEARING-REAR
2	7E-8928	1	GASKET-BASE
3	CH3B-4505	4	LOCKWASHER (.097IN THK)
4	CH4P-3977	1	GASKET-CYLINDER HEAD
5	CH0S-1617	12	BOLT (5/16-18X0.75 IN)
6	CH8T-6764	2	PLUG-PIPE
7	CH4P-3966	2	PISTON & ROD AS
8	CH8T-6762	1	PLUG-PIPE
9	CH0L-1352	6	BOLT (3/8-16X3.25 IN)
10	CH146-0835	2	STUD-END COVER
11	CH2H-3934	1	SEAL-O-RING
12	CH103-6216	1	KEY
13	CH124-5572	1	VALVE
14	400649X1	1	PLATE-INFORMATION
-	7E-8923	1	KIT-CRANKSHAFT BEARING
-	7E-8925	1	KIT-STANDARD RING
-	7E-8926	1	KIT-CYLINDER HEAD
-	150-5146	1	KIT-UNLOADER

[A] PART OF 180-2937; 500970D1
AIR COMPRESSOR GP

00783724
PR: t05i29k58b0024

COMPRESSOR GP-AIR - 500970D1

MT855 & MT865

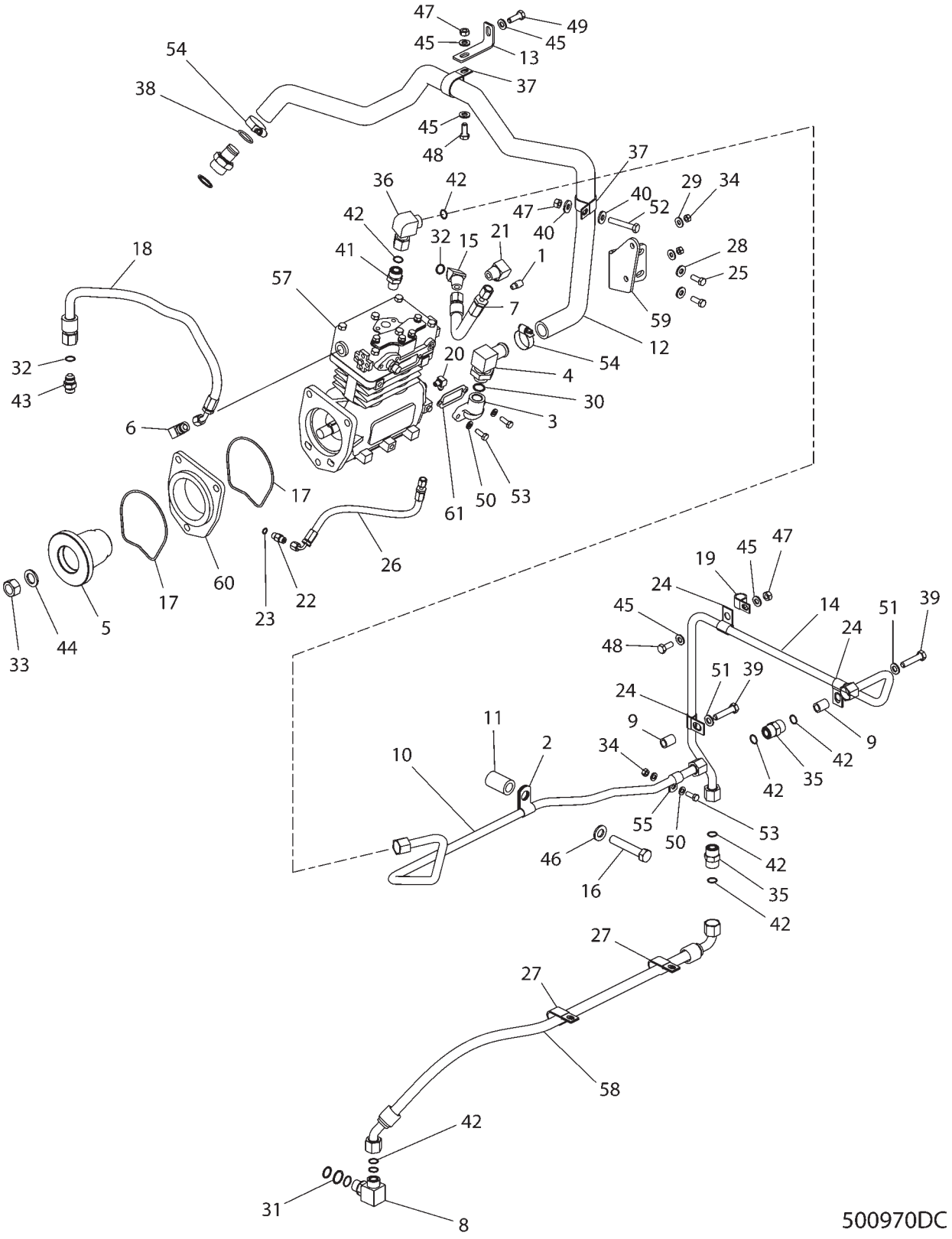

COMPRESSOR GP-AIR - 500970D1

MT855 & MT865

ITEM	NUMBER	QTY	DESCRIPTION
-	500970D1	--	AIR COMPRESSOR GP [A] (NOT SERVICED)
1	CH5F-5434	1	VENT AS-1/8NPTF
2	CH5P-7808	1	CLIP-LOOP 16.0 ID
3	400692X1	1	ELBOW
4	400704X1	1	CONNECTOR-90DEG 10 STORX25.4 OD BARB
5	101-9640	1	GEAR-AIR COMPRESSOR
6	CH170-5282	1	ELBOW-90DEG 8FLAR37X8NPTF
7	179-2886	1	HOSE AS-12.7 ID CMS 5883
8	CH184-8029	1	ELBOW AS.-90DEG 10 ORFS X M22
	400366X1	1	SEAL-O-RING (22.5ODX1.78DIA)
	400322X1	1	SEAL-O-RING (19.28IDX1.78DIA)
	187-9009	1	RING-RETAINING
9	197-1437	2	SPACER
10	198-1955	1	TUBE AS.
11	198-1961	1	SPACER
12	212-3602	1	HOSE-AIR INLET
13	215-8051	1	BRACKET
14	218-2808	1	TUBE AS.
15	400280X1	1	ELBOW-45DEG 8STOR 8 37DEG FLARED
16	400130X1	1	BOLT-5/8-18X88.9 PH&O HHD 10.9
17	CH110-0004	2	SEAL (AIR COMP MTG)
18	179-2887	1	HOSE AS-12.7 ID CMS 5883
19	CH1S-0994	1	CLIP-LOOP 20.64 ID
20	400658X1	1	ELBOW-90DEG 4 FLAR 37 X 2 NPTF
21	400659X1	1	ELBOW-90 DEG 8 FLAR37 X 8 NPTF
22	400281X1	1	CONNECTOR-4 STOR 4 37DEG FLARED
23	400361X1	1	SEAL-O-RING (8.92ID X 1.83DIA)
24	CH4K-8302	3	CLIP-LOOP 15.88 ID W/COAT
25	400149X1	2	BOLT-3/8-16X25.4 ZNDI HHD 10.9
26	501942D1	1	HOSE ASM-7/16-20 THD,FJS/FJS90
27	400665X1	2	CLIP-LOOP 19ID X 2
28	CH5P-1075	2	WASHER-HARD 10.2IDX22.5ODX3ORG
29	400599X1	2	WASHER-HARD,M8X20.5ODX2THK
30	400674X1	1	SEAL-O-RING 19.18IDX2.46DIA
31	400675X1	1	SEAL-O-RING 19.18IDX2.46DIA
32	400678X1	2	SEAL-O-RING 16.36IDX2.21DIA
33	400681X1	1	NUT M20 X 2.5 THD X 18
34	400682X1	3	NUT 5/16-18 THD 6.75
35	400684X1	2	UNION- 10 ORFS
36	400687X1	1	ELBOW-90DEG 10 ORFS SWVL
37	400689X1	2	CLIP LOOP 38.1ID
38	400376X1	1	SEAL-O-RING 29.74 IDX2.95 DIA
39	400177X1	2	BOLT-7/16-14X50 ZNDI HHD 10.9

CONTINUED

[A] PART OF:
186-1620; 192-6390 BRAKE AR-AIR TRA
190-0440; 210-5704 TANK AR-AIR

500970DC
PR: t05i29k58b0025

COMPRESSOR GP-AIR - 500970D1

MT855 & MT865

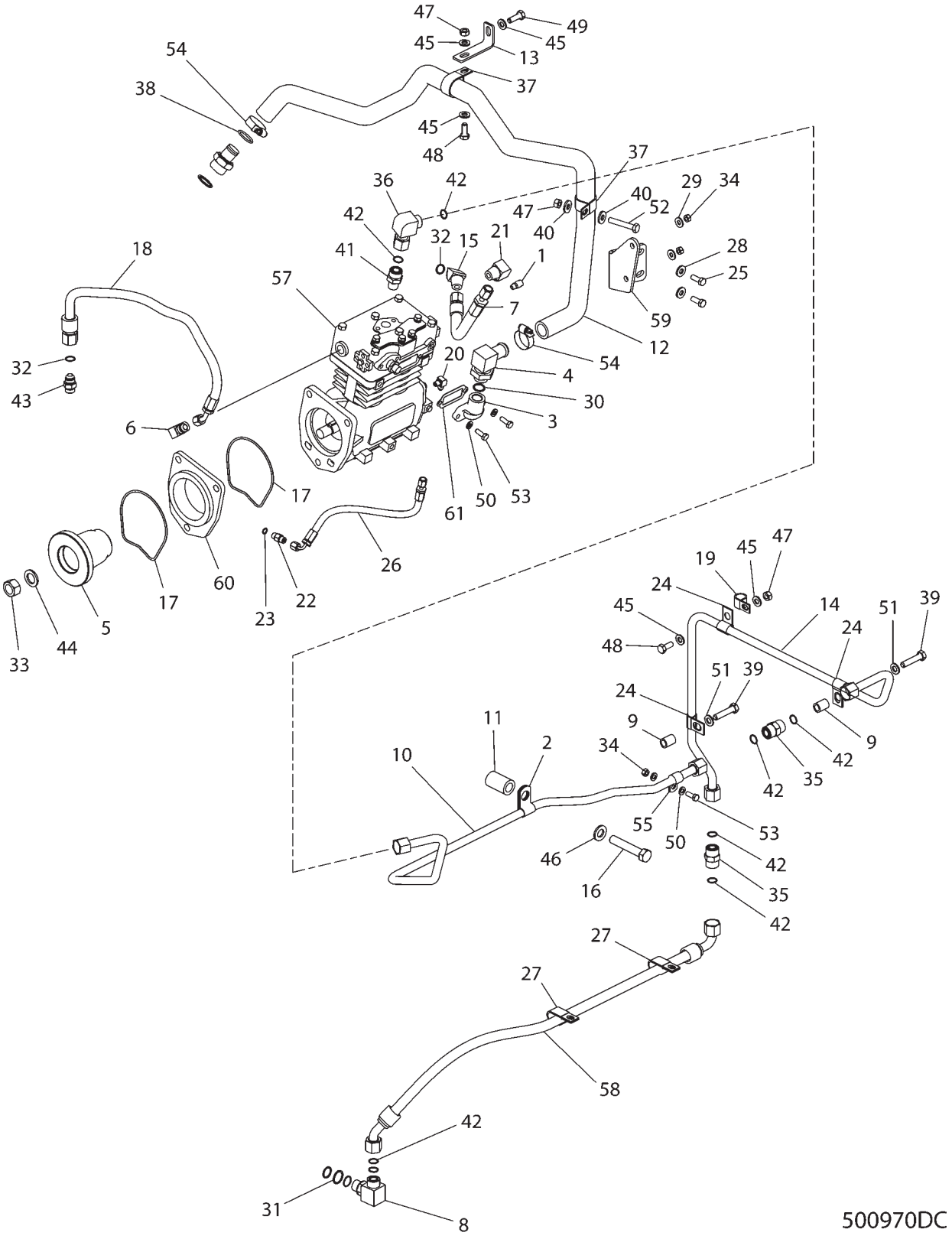

COMPRESSOR GP-AIR - 500970D1

MT855 & MT865

ITEM	NUMBER	QTY	DESCRIPTION
-	500970D1	--	AIR COMPRESSOR GP [A] (NOT SERVICED)
40	CH7X-7729	2	WASHER-11IDX5ODX3MM
41	400693X1	1	ADAPTER-STR,0.50MNPTFX-10MORFS
42	CH8L-2746	7	SEAL-O-RING 15.61IDX1.78DIA
43	400696X1	1	CONNECTOR-8FLAR 37 X 8STOR
44	CH8T-3282	1	WASHER HARD-22IDX35ODX3.5MM
45	400287X1	5	WASHER-HARD 11IDX21ODX2.5 ZND1
46	CH8T-4122	1	WASHER HARD-17IDX32ODX3.5MM
47	WR522218	3	NUT-M10-1.5,CL10.9,ZN,H,REG
48	400039X1	2	BOLT-M10X1.5X25 ZNDI HHD 10.9
49	400058X1	1	BOLT-M10X1.5X30 ZNDI HHD 10.9
50	400339X1	4	WASHER-HARD
51	400358X1	2	WASHER-HARD-7/16X22.50DX2.5THK
52	400239X1	1	BOLT-M10X1.5X60 ZNDI HHD 10.9
53	400249X1	3	BOLT-5/16-18X22.2 ZNDI HHD10.9
54	400701X1	2	CLAMP-HOSE SST22.2-44.5IDX13.5
55	400702X1	1	CLIP-ONE TUBE COATED
56	400703X1	1	CONNECTOR AS-16STORX25.4 BARB
	400376X1	1	SEAL-O-RING
57	215-8055	1	COMPRESSOR AS-AIR
			(SEE BREAKDOWN FOR COMPONENTS)
58	218-2809	1	HOSE AS-15.9 ID CMS 5758A
59	500515D1	1	BRACKET
60	6I-3907	1	ADAPTER-PILOT
61	400697X1	1	GASKET-AIR COMPRESSOR

[A] PART OF:
186-1620; 192-6390 BRAKE AR-AIR TRA
190-0440; 210-5704 TANK AR-AIR

500970DC
PR: t05i29k58b0025

AIR COMPRESSOR GP - 215-8055

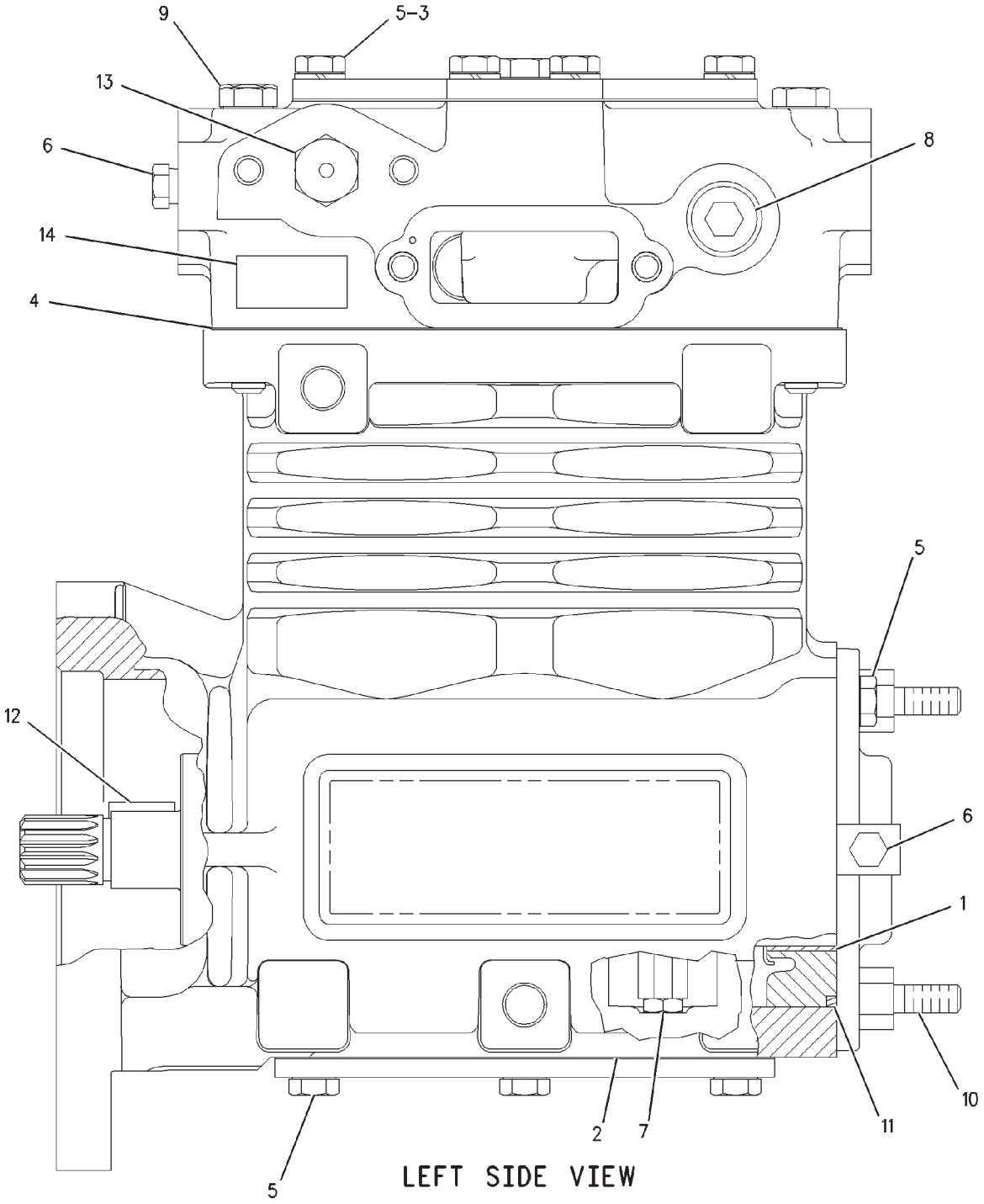

00783724

AIR COMPRESSOR GP - 215-8055

ITEM	NUMBER	QTY	DESCRIPTION
-	215-8055	--	AIR COMPRESSOR GP [A]
1	CH7C-6178	2	BEARING-REAR
2	7E-8928	1	GASKET-BASE
3	CH3B-4505	4	LOCKWASHER (.097IN THK)
4	CH4P-3977	1	GASKET-CYLINDER HEAD
5	CH0S-1617	12	BOLT (5/16-18X0.75 IN)
6	CH8T-6764	2	PLUG-PIPE
7	CH4P-3966	2	PISTON & ROD AS
8	CH8T-6762	1	PLUG-PIPE
9	CH0L-1352	6	BOLT (3/8-16X3.25 IN)
10	CH146-0835	2	STUD-END COVER
11	CH2H-3934	1	SEAL-O-RING
12	CH103-6216	1	KEY
13	CH124-5572	1	VALVE
14	400649X1	1	PLATE-INFORMATION
-	7E-8923	1	KIT-CRANKSHAFT BEARING
-	7E-8925	1	KIT-STANDARD RING
-	7E-8926	1	KIT-CYLINDER HEAD
-	150-5146	1	KIT-UNLOADER

[A] PART OF 180-2937; 180-2398;
500970D1 AIR COMPRESSOR GP

00783724
PR: t05i29k58b0026

DRIVE GP-ACCESSORY - 187-1791

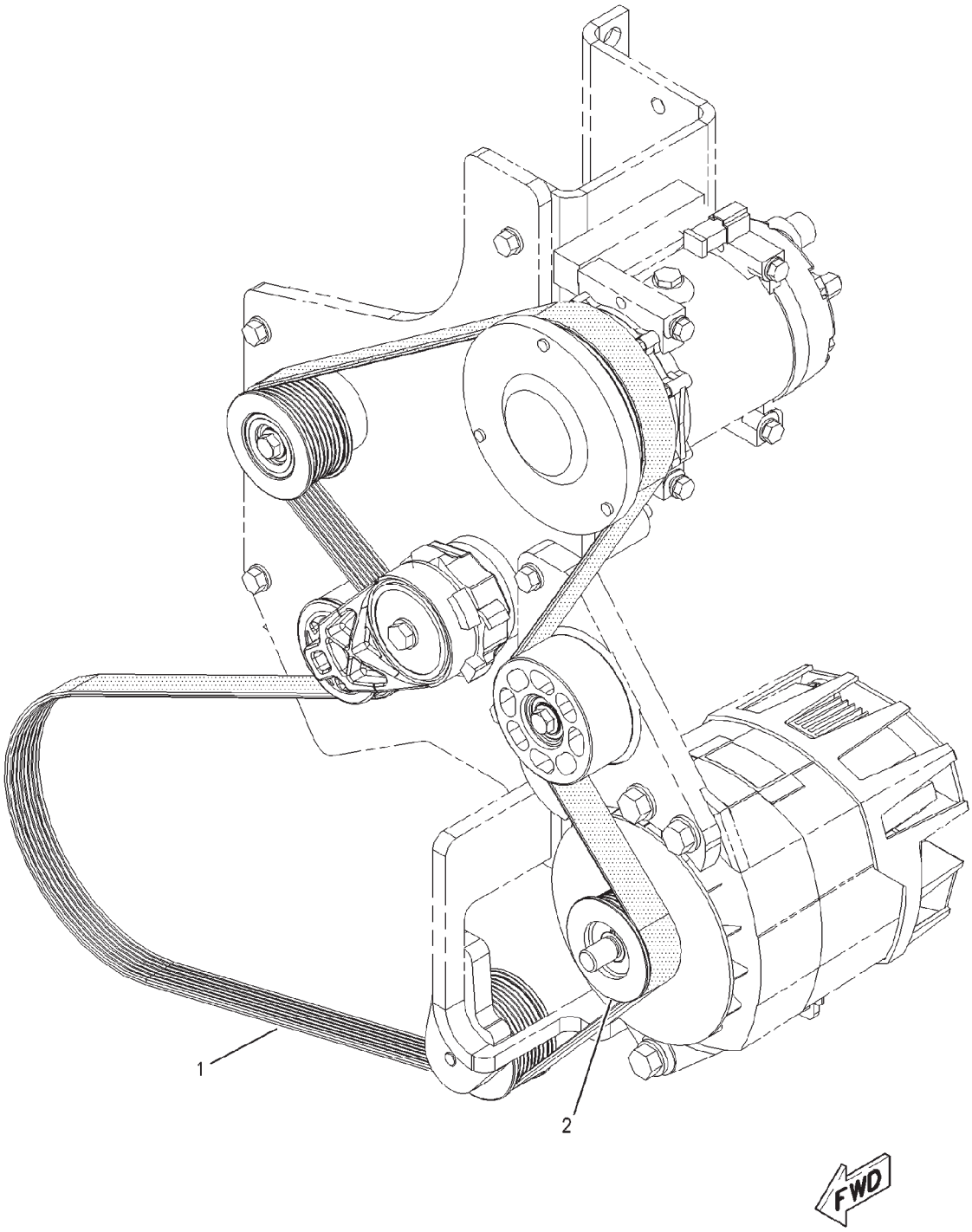

00869546

DRIVE GP-ACCESSORY - 187-1791

ITEM	NUMBER	QTY	DESCRIPTION
-	187-1791	--	DRIVE GP-ACCESSORY [A] (NOT SERVICED)
1	500685D1	1	BELT (ALTERNATOR)
2	500519D1	1	PULLEY-ALTERNATOR (8 GROOVE)

[A] PART OF 172-5361;172-5362;172-5363;
172-5364;187-1741;187-1742;187-1743;
187-1744 INSTALLATION AR-ENGINE

00869546
PR: t05i29k58b0027

DRIVE GP-FAN - 193-2266
MT835 & MT845

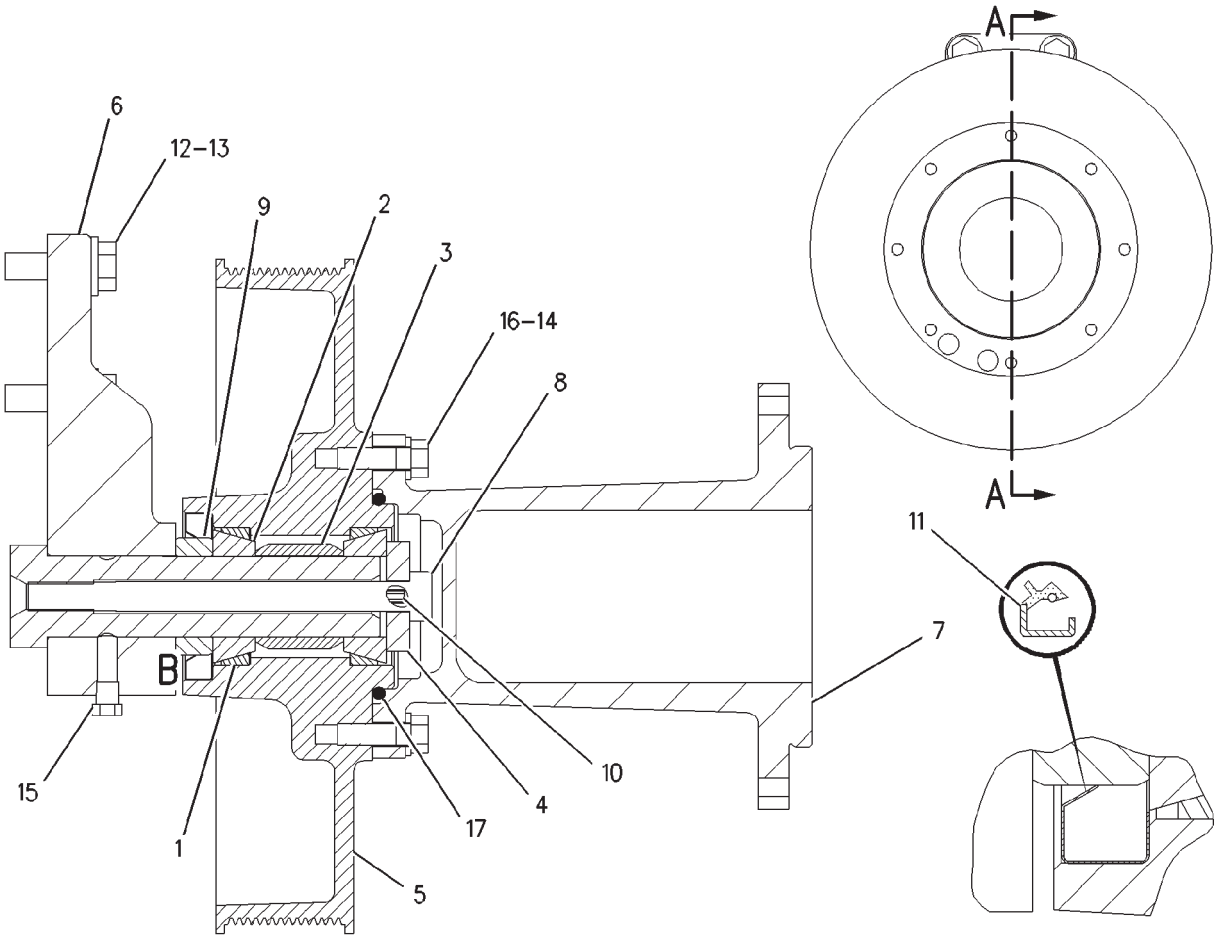

SECTION A–A

VIEW OF AREA B

00901705

DRIVE GP-FAN - 193-2266

MT835 & MT845

ITEM	NUMBER	QTY	DESCRIPTION
-	193-2266	--	DRIVE GP-FAN [A] (NOT SERVICED)
1	CH4W-1203	2	CUP-BEARING
2	CH4W-1204	2	CONE-BEARING
3	CH4W-2042	1	SPACER (35.3X45.5X38.331)
4	CH7E-4808	1	PLATE
5	193-2272	1	PULLEY-FAN
6	221-0808	1	BRACKET
7	221-2549	1	ADAPTER-FAN
8	400146X1	1	BOLT (1/2-13X6.5 IN)
9	CH5S-9062	1	SPACER (35.032X50.8X15.88)
10	CH6H-3956	1	PIN
11	CH6V-9748	1	SEAL-LIP
12	400050X1	4	BOLT (M12X1.75X40MM)
13	400357X1	4	WASHER-HARD (M12X25.5X3)
14	CH8T-4896	6	WASHER-HARD (10.2X18.5X2.5)
15	CH8T-6764	1	PLUG-PIPE
16	400252X1	6	BOLT (3/8-16X1.25 IN)
17	CH9F-4446	1	SEAL-O-RING (78.74MM ID)
18	CH8T-1807		LUBRICANT [B]

[A] PART OF 185-2237 PULLEY GP
[B] LUBRICATE DRIVE GP WITH 40 GRAMS OF BEARING LUB. LIGHTLY LUB. THE SEALING LIPS WITH BEARING LUB.

00901705
PR: t05i29k58b0028

DRIVE GP-FAN - 193-2265
MT855

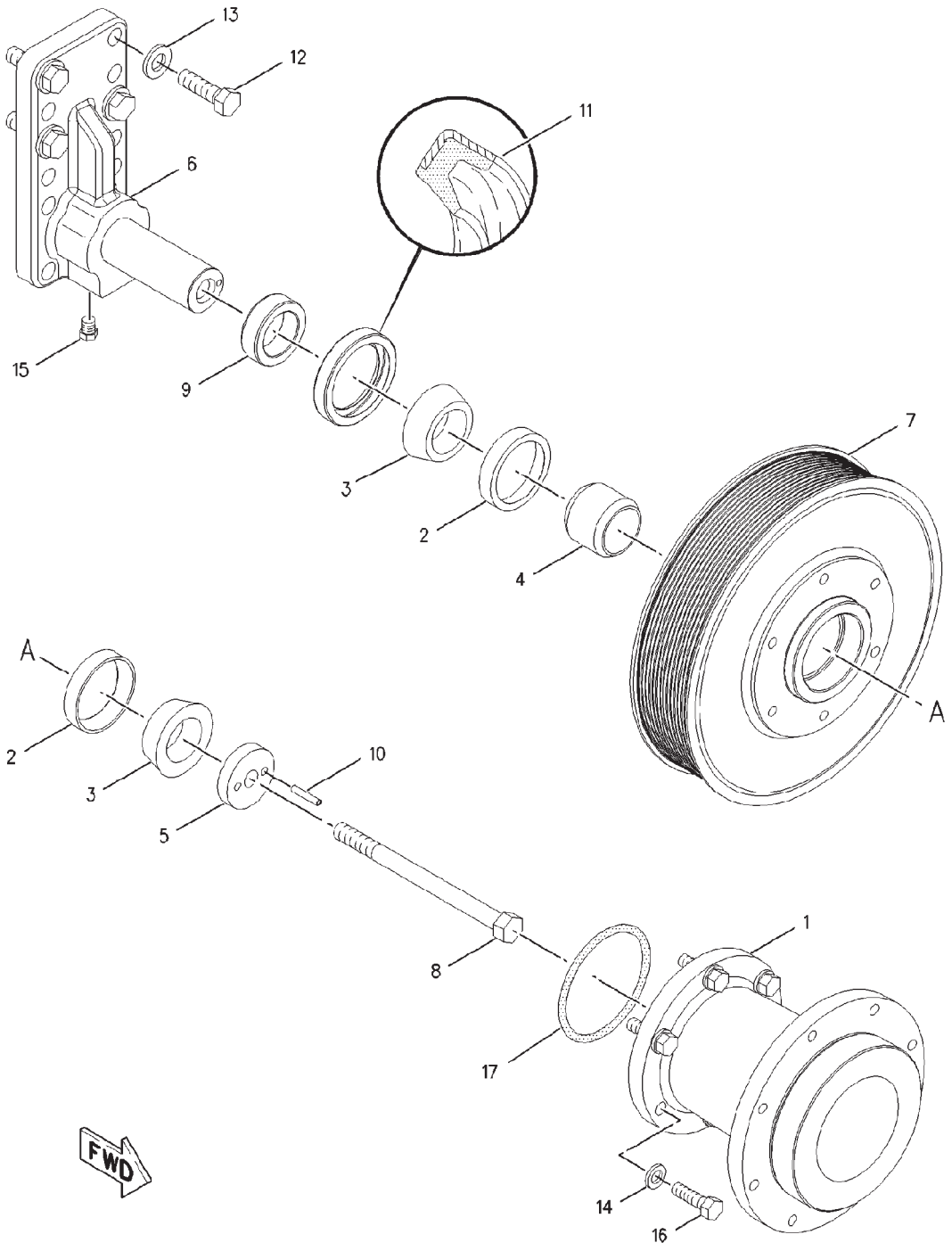

00886751

DRIVE GP-FAN - 193-2265

MT855

ITEM	NUMBER	QTY	DESCRIPTION
-	193-2265	--	DRIVE GP-FAN [A]
1	221-2548	1	ADAPTER-FAN
2	CH4W-1203	2	CUP-BEARING
3	CH4W-1204	2	CONE-BEARING
4	CH4W-2042	1	SPACER (35.3X45.5X38.331)
5	CH7E-4808	1	PLATE
6	221-0808	1	BRACKET
7	193-2271	1	PULLEY-FAN
8	400146X1	1	BOLT (1/2-13X6.5 IN)
9	CH5S-9062	1	SPACER (35.032X50.8X15.88)
10	CH6H-3956	1	PIN
11	CH6V-9748	1	SEAL-LIP
12	400050X1	4	BOLT (M12X1.75X40MM)
13	400357X1	4	WASHER-HARD (M12X25.5X3)
14	CH8T-4896	6	WASHER-HARD (10.2X18.5X2.5)
15	CH8T-6764	1	PLUG-PIPE
16	400252X1	6	BOLT (3/8-16X1.25 IN)
17	CH9F-4446	1	SEAL-O-RING

[A] PART OF 185-2239 PULLEY GP

00886751
PR: t05i29k58b0029

DRIVE GP-FAN - 197-5675
MT865

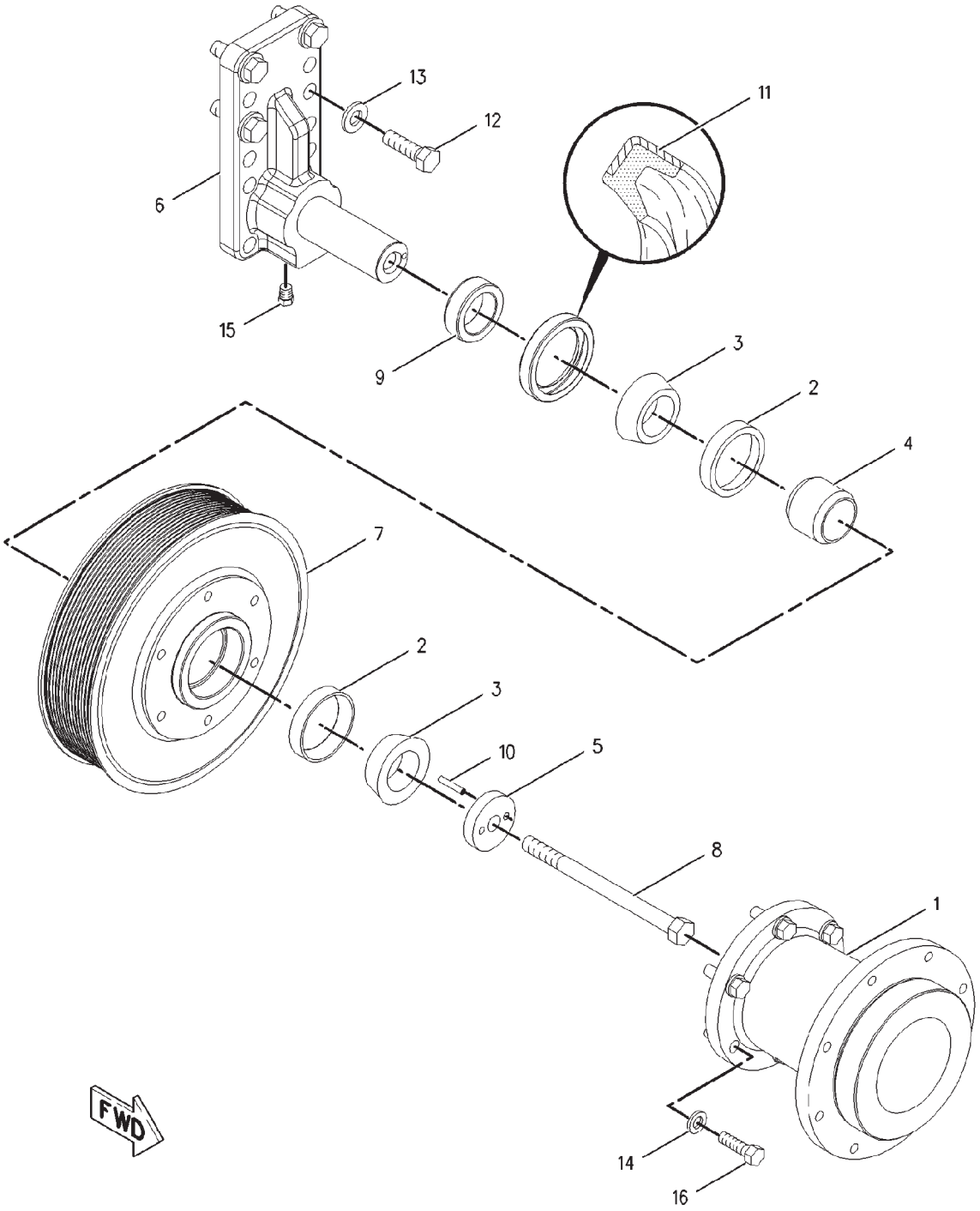

00878552

DRIVE GP-FAN - 197-5675

MT865

ITEM	NUMBER	QTY	DESCRIPTION
-	197-5675	--	DRIVE GP-FAN [A] (NOT SERVICED)
1	221-2548	1	ADAPTER-FAN
2	CH4W-1203	2	CUP-BEARING
3	CH4W-1204	2	CONE-BEARING
4	CH4W-2042	1	SPACER (35.3X45.5X38.331)
5	CH7E-4808	1	PLATE
6	221-0808	1	BRACKET
7	197-5676	1	PULLEY-FAN
8	400146X1	1	BOLT (1/2-13X165)
9	CH5S-9062	1	SPACER (35.032X50.8X15.88)
10	6H-3956	1	PIN
11	CH6V-9748	1	SEAL-LIP
12	400050X1	4	BOLT (M12X1.75X40MM)
13	400357X1	4	WASHER-HARD (M12X25.5X3)
14	CH8T-4896	6	WASHER-HARD (10.2X18.5X2.5)
15	8T-6764	1	PLUG-PIPE
16	400252X1	6	BOLT (3/8-16X1.25 IN)
17	CH9F-4446	1	SEAL-O-RING (NOT SHOWN)
18	CH8T-1807	AR	LUBRICANT (NOT SHOWN) [B]

[A] PART OF 185-2240 PULLEY GP

[B] LUBRICATE DRIVE GP WITH 40 GRAMS OF BEARING LUBRICANT. LIGHTLY LUB. THE SEALING LIPS WITH BEARING LUB. ADD 10 GRAMS IN CAVITY BETWEEN BEARINGS AN PUT 30 GRAMS IN THE FAN ADAPTER CAVITY.

00878552
PR: t05i29k58b0030

MOUNTING GP-ALTERNATOR - 206-6987

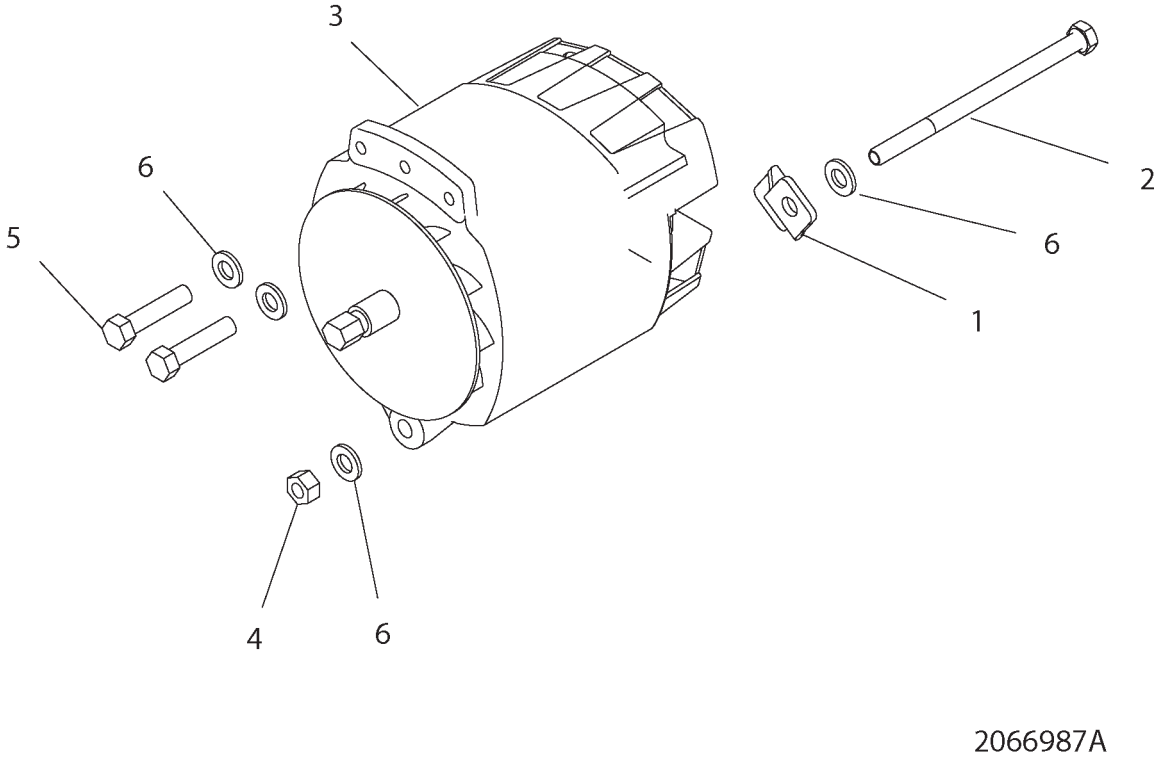

MOUNTING GP-ALTERNATOR - 206-6987

ITEM	NUMBER	QTY	DESCRIPTION
-	206-6987	--	MOUNTING GP-ALT [A] (NOT SERVICED)
1	142-9826	1	BRACKET ASM
2	400826X1	1	BOLT (1/2-13X7.5")
3	184-7171	1	ALTERNATOR-12V 160A (S/N: PRIOR TO BAM40569;BBP40459;BCC40674;BDS40753)
	136-5600		FUSE
3	501774D1	1	ALTERNATOR-12V 160A (S/N: EFF BAM40569;BBP40459;BCC40674;BDS40753)
	501883D1	1	GUARD
	501884D1	1	REGULATOR
4	400570X1	1	NUT (1/2-13)
5	500316D1	2	BOLT (1/2-13X2") (EARLY VERSION)
5	400274X1	2	BOLT (1/2-13X2.25") (LATER VERSION)
6	400357X1	4	WASHER-HARD (M12X25.5X3)

[A] PART OF 172-5361;172-5362;172-5363; 172-5364;187-1741;187-1742;187-1743; 187-1744 INSTALLATION AR-ENGINE

2066987A
PR: t05i29k58b0031

MOUNTING GP-ENGINE - 172-5334

MT835 & MT845

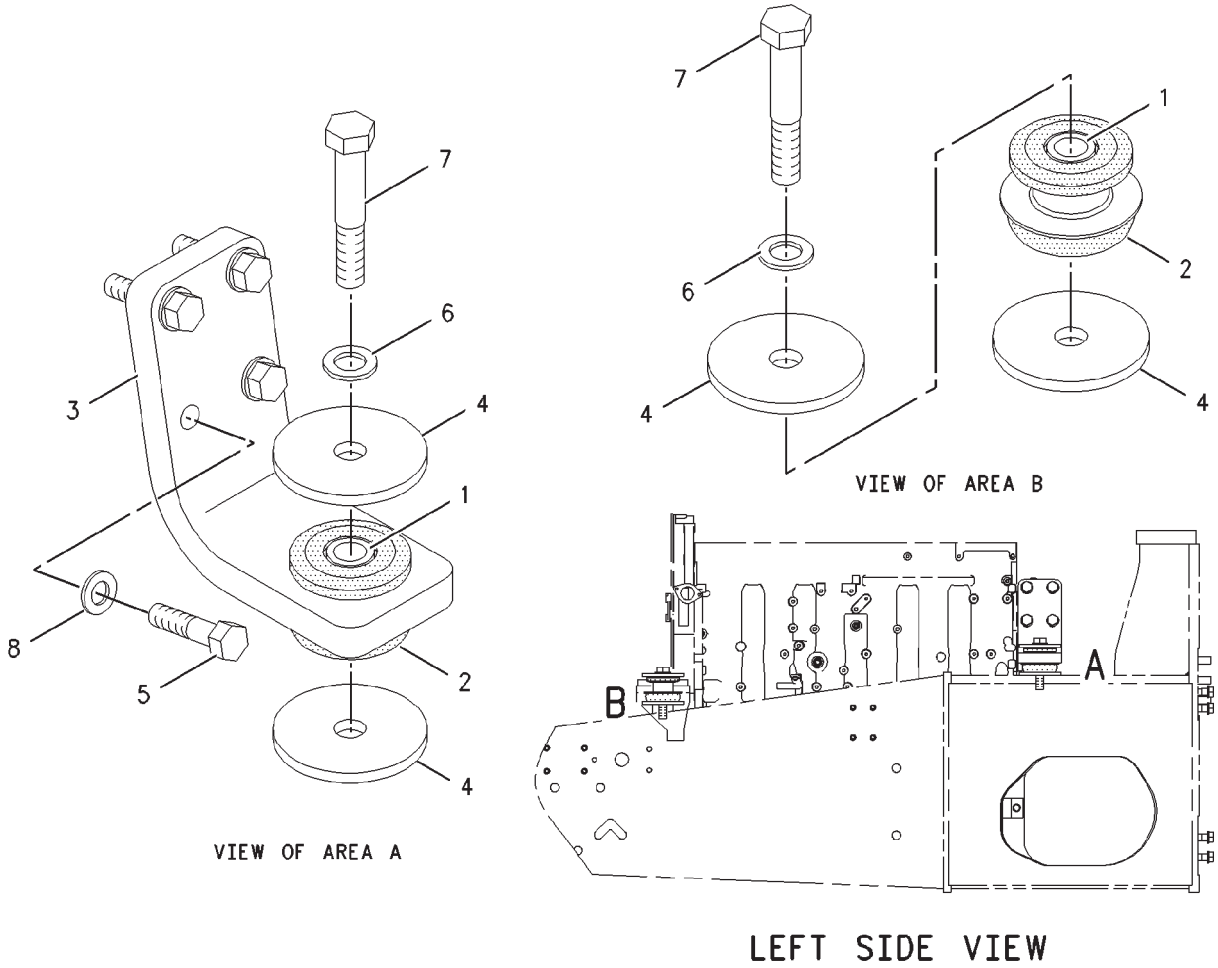

00898127

MOUNTING GP-ENGINE - 172-5334

MT835 & MT845

ITEM	NUMBER	QTY	DESCRIPTION
-	172-5334	--	MOUNTING GP-ENGINE [A] (NOT SERVICED)
1	CH3E-4883	4	SLEEVE
2	CH9W-9930	4	MOUNT ASM (INCLUDES PAD & MOUNT)
3	192-1463	2	SUPPORT (REAR)
4	400336X1	8	WASHER (26IDX126ODX10
5	400181X1	8	BOLT (3/4-10X3 IN)
6	400081X1	4	WASHER-HARD (26X44X4)
7	400229X1	4	BOLT (M24X3X140MM)
8	CH8T-4994	8	WASHER-HARD (20X36.5X3.5)

[A] PART OF 172-5361; 172-5362
INSTALLATION AR-ENGINE
NOTE: QUANTITIES SHOWN ARE THOSE
REQUIRED FOR BOTH RH AND LH SIDES.

00898127
PR: t05i29k58b0032

MOUNTING GP-ENGINE - 172-5333

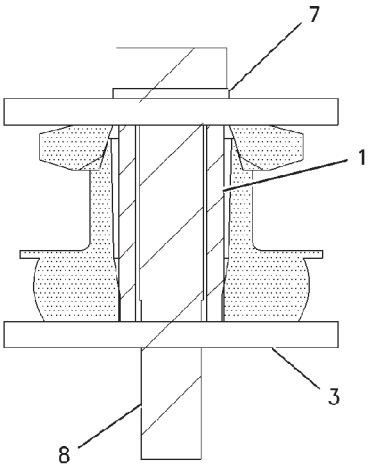

SECTION A-A

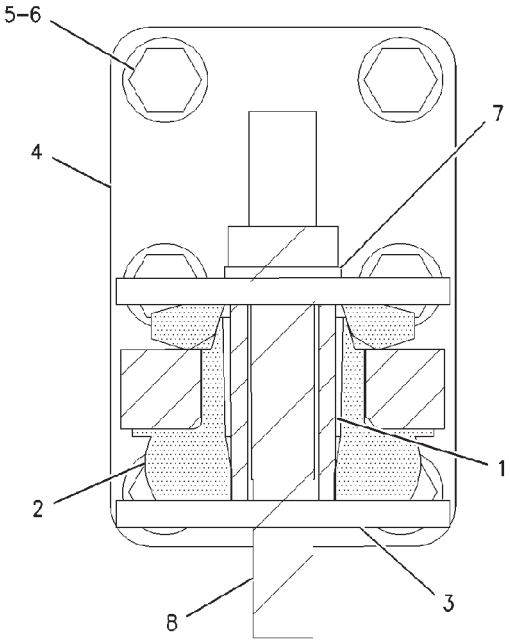

SECTION B-B

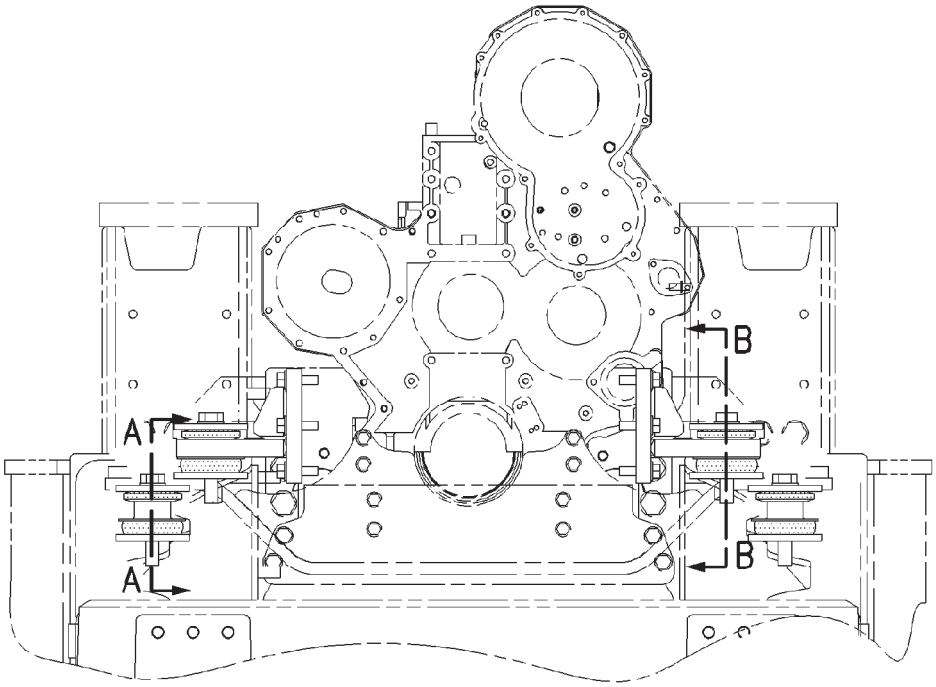

FRONT VIEW

00867786

MOUNTING GP-ENGINE - 172-5333

ITEM	NUMBER	QTY	DESCRIPTION
-	172-5333	--	MOUNTING GP-ENGINE [A] (NOT SERVICED)
1	CH3E-4883	4	SLEEVE
2	CH9W-9930	4	MOUNT ASM (INCLUDES PAD & MOUNT)
3	400336X1	8	WASHER
4	223-0701	2	BRACKET-SUPPORT ENGINE
5	400180X1	12	BOLT (5/8-11X50.8)
6	CH8T-4122	12	WASHER-HARD (17X32X3.5)
7	400081X1	4	WASHER-HARD (26X44X4)
8	400229X1	4	BOLT (M24X3X140MM)

[A] PART OF 172-5363;172-5364;187-1743;
187-1744 INSTALLATION AR-ENGINE

00867786
PR: t05i29k58b0033

MOUNTING GP-REFRIGERANT COMPR - 187-1792

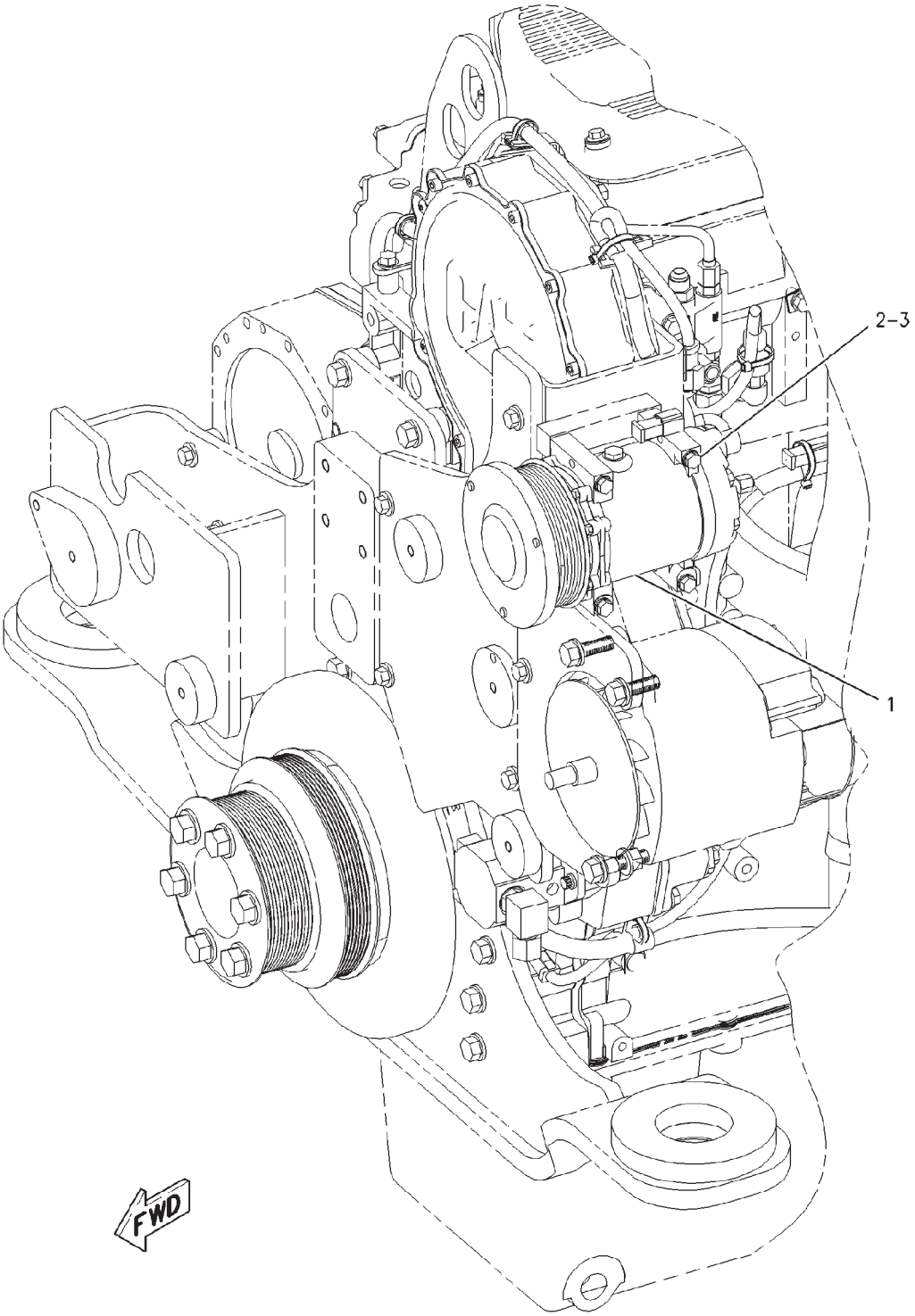

00867656

MOUNTING GP-REFRIGERANT COMPR - 187-1792

ITEM	NUMBER	QTY	DESCRIPTION
-	187-1792	--	MOUNTING GP-REFRIGERANT COMPR [A] (NOT SERVICED)
1	CH178-9570	1	COMPRESSOR GP-REFRIGERANT (SEE BREAKDOWN FOR COMPONENTS)
2	400028X1	4	BOLT (M8X1.25X100MM)
3	400339X1	4	WASHER-HARD (8.8X16X2)

[A] PART OF 172-5361;172-5362;172-5363; 172-5364;187-1741;187-1742;187-1743; 187-1744 INSTALLATION AR-ENGINE

00867656
PR: t05i29k58b0034

PULLEY GP - 185-2237
MT835 & MT845

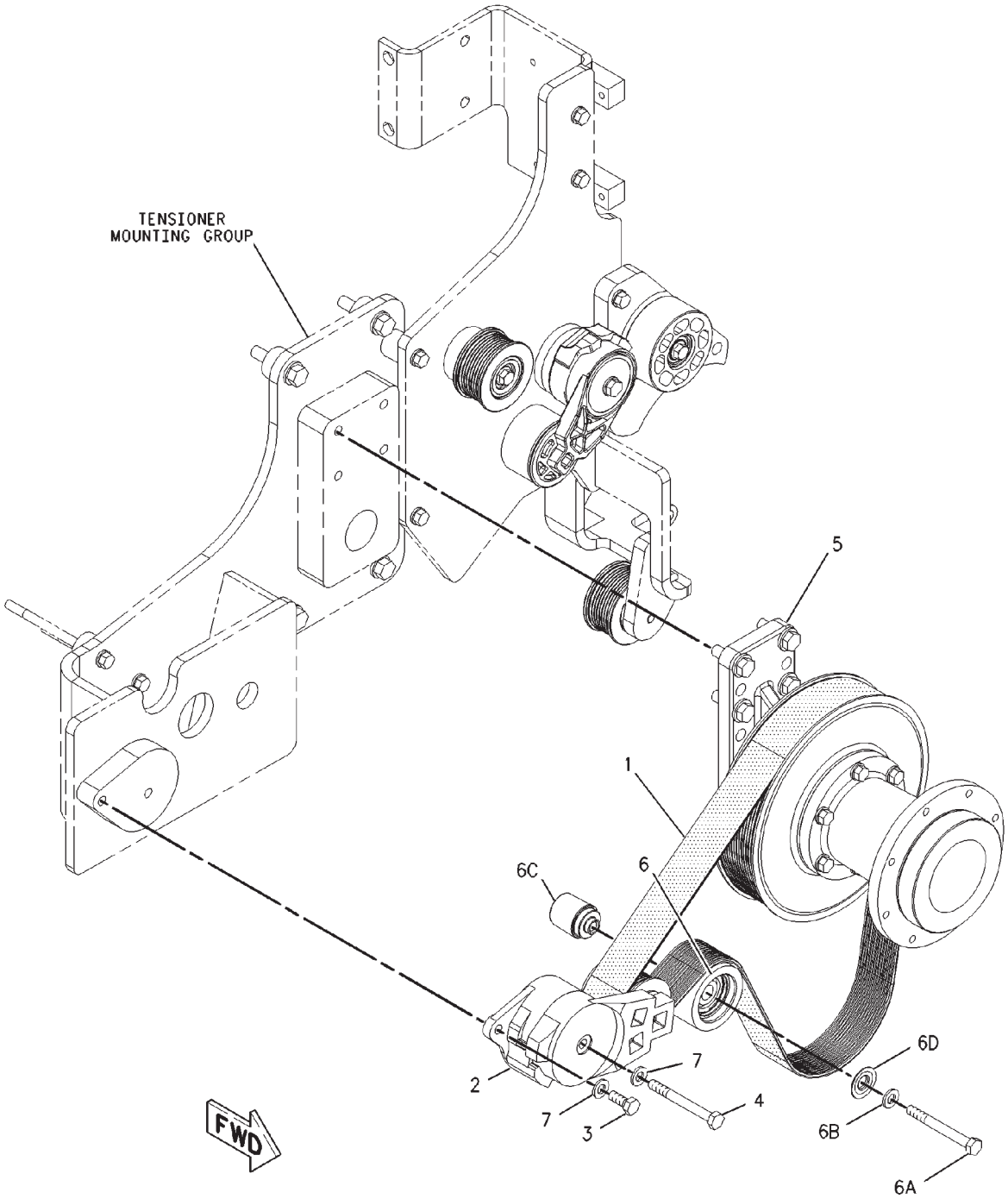

00868139

PULLEY GP - 185-2237

MT835 & MT845

ITEM	NUMBER	QTY	DESCRIPTION
-	185-2237	--	PULLEY GP [A] (NOT SERVICED)
1	501178D1	1	BELT (FAN DRIVE)
2	221-1230	1	BELT TIGHTENER
3	400039X1	1	BOLT (M10X1.5X25MM)
4	400225X1	1	BOLT (M10X1.5X90MM)
5	193-2266	1	DRIVE GP-FAN (NOT SERVICED)
			(SEE BREAKDOWN FOR COMPONENTS)
6	221-1233	1	PULLEY ASM-IDLER (INCLUDES PULLEY ASM)
	CH172-2241	1	PULLEY ASM
			(INCLUDES 6A THRU 6D)
6A	CH8T-0644	1	BOLT (M10X1.50X90MM)
6B	400287X1	1	WASHER-HARD (11X21X2.5)
6C	CH172-3403	1	SPACER
6D	CH194-4168	1	COVER-DUST
7	400287X1	2	WASHER-HARD (11X21X2.5)

[A] PART OF 172-5361; 172-5362
INSTALLATION AR-ENGINE

00868139
PR: t05i29k58b0035

PULLEY GP - 185-2239
FAN BELT TIGHTENER
MT855

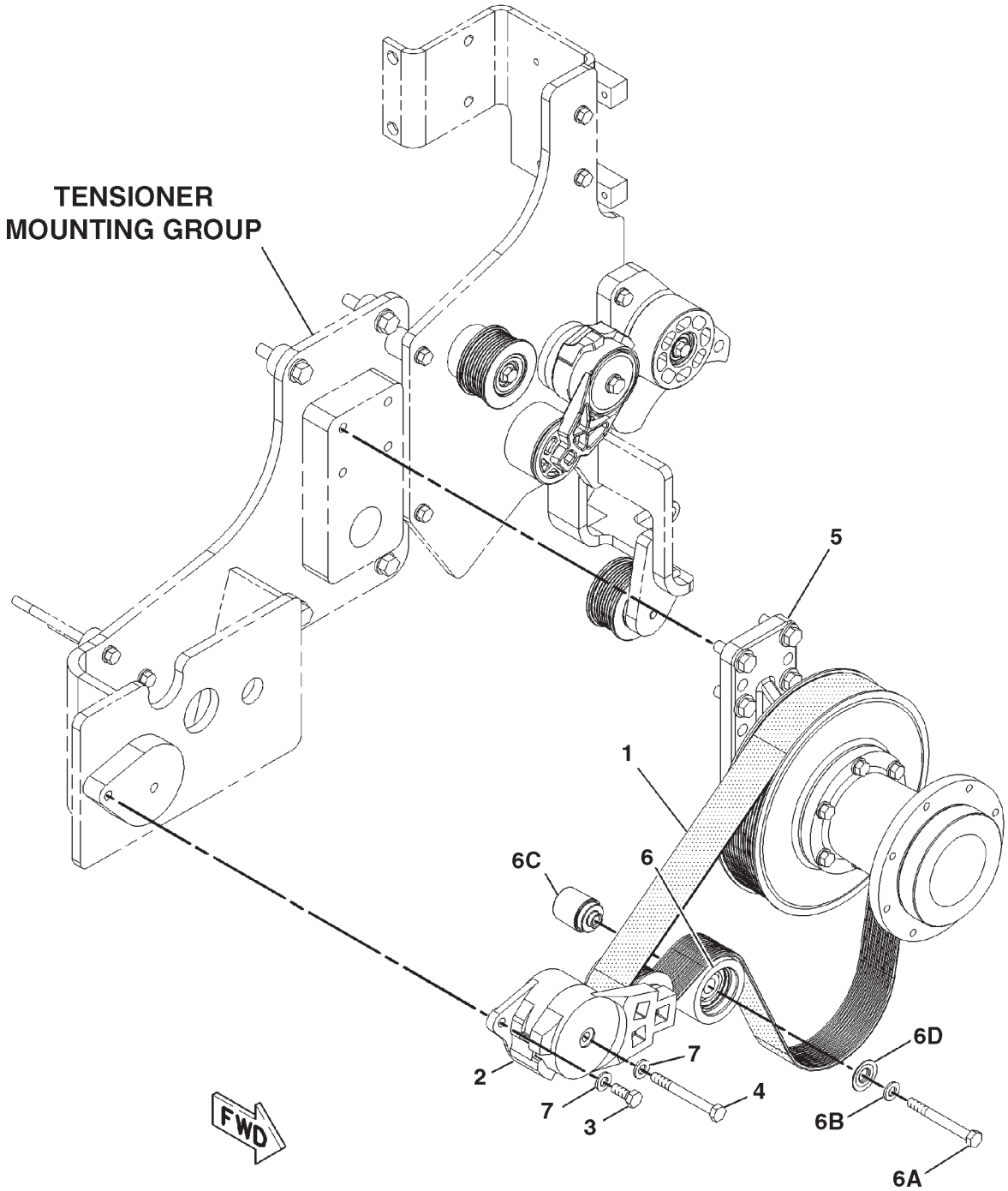

0868139A

PULLEY GP - 185-2239
FAN BELT TIGHTENER
MT855

ITEM	NUMBER	QTY	DESCRIPTION
-	185-2239	--	PULLEY GP [A] (NOT SERVICED)
1	197-6291	1	BELT (FAN DRIVE)
2	221-1230	1	TIGHTENER-BELT
3	400039X1	1	BOLT (M10X1.5X25MM)
4	400225X1	1	BOLT (M10X1.5X90MM)
5	193-2265	1	DRIVE GP-FAN
			(SEE BREAKDOWN FOR COMPONENTS)
6	221-1233	1	PULLEY ASM-IDLER
	CH172-2241	1	PULLEY ASM-IDLER (INCLS 6A THRU 6D)
6A	CH8T-0644	1	BOLT (M10X1.50X90MM)
6B	400287X1	1	WASHER-HARD (11X21X2.5)
6C	CH172-3403	1	SPACER
6D	CH194-4168	1	COVER-DUST
7	400287X1	2	WASHER-HARD (11X21X2.5)

[A] PART OF 172-5363; 187-1743
INSTALLATION AR-ENGINE

0868139A
PR: t05i29k58b0036

PULLEY GP - 185-2240

FAN BELT TIGHTENER
MT865

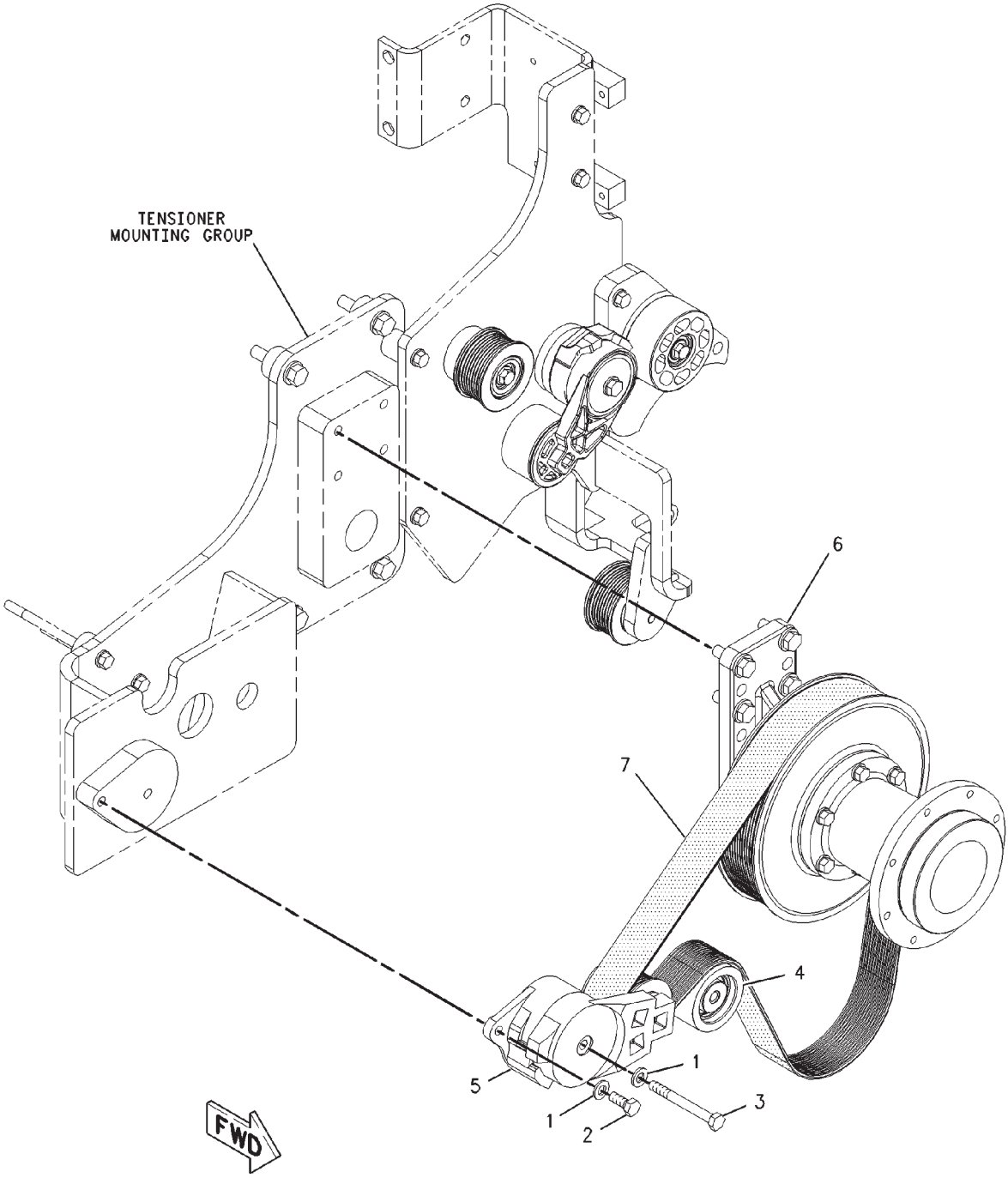

00899835

PULLEY GP - 185-2240
FAN BELT TIGHTENER
MT865

ITEM	NUMBER	QTY	DESCRIPTION
-	185-2240	--	PULLEY GP [A] (NOT SERVICED)
1	400287X1	2	WASHER-HARD (11X21X2.5)
2	400039X1	1	BOLT (M10X1.5X25MM)
3	400225X1	1	BOLT (M10X1.5X90MM)
4	221-1233	1	PULLEY ASM-IDLER
	CH172-2241		PULLEY (INCLUDES 4A THRU 4D)
4A	CH8T-0644	1	BOLT (M10X1.50X90MM)
4B	400287X1	1	WASHER-HARD (11X21X2.5)
4C	CH172-3403	1	SPACER
4D	CH194-4168	1	COVER-DUST
5	221-1230	1	BELT TIGHTENER
6	197-5675	1	DRIVE GP-FAN (NOT SERVICED)
			(SEE BREAKDOWN FOR COMPONENTS)
7	197-6292	1	BELT

[A] PART OF 172-5364; 187-1744
INSTALLATION AR-ENGINE

00899835
PR: t05i29k58b0037

COOLER GP & MOUNTING - 190-1482

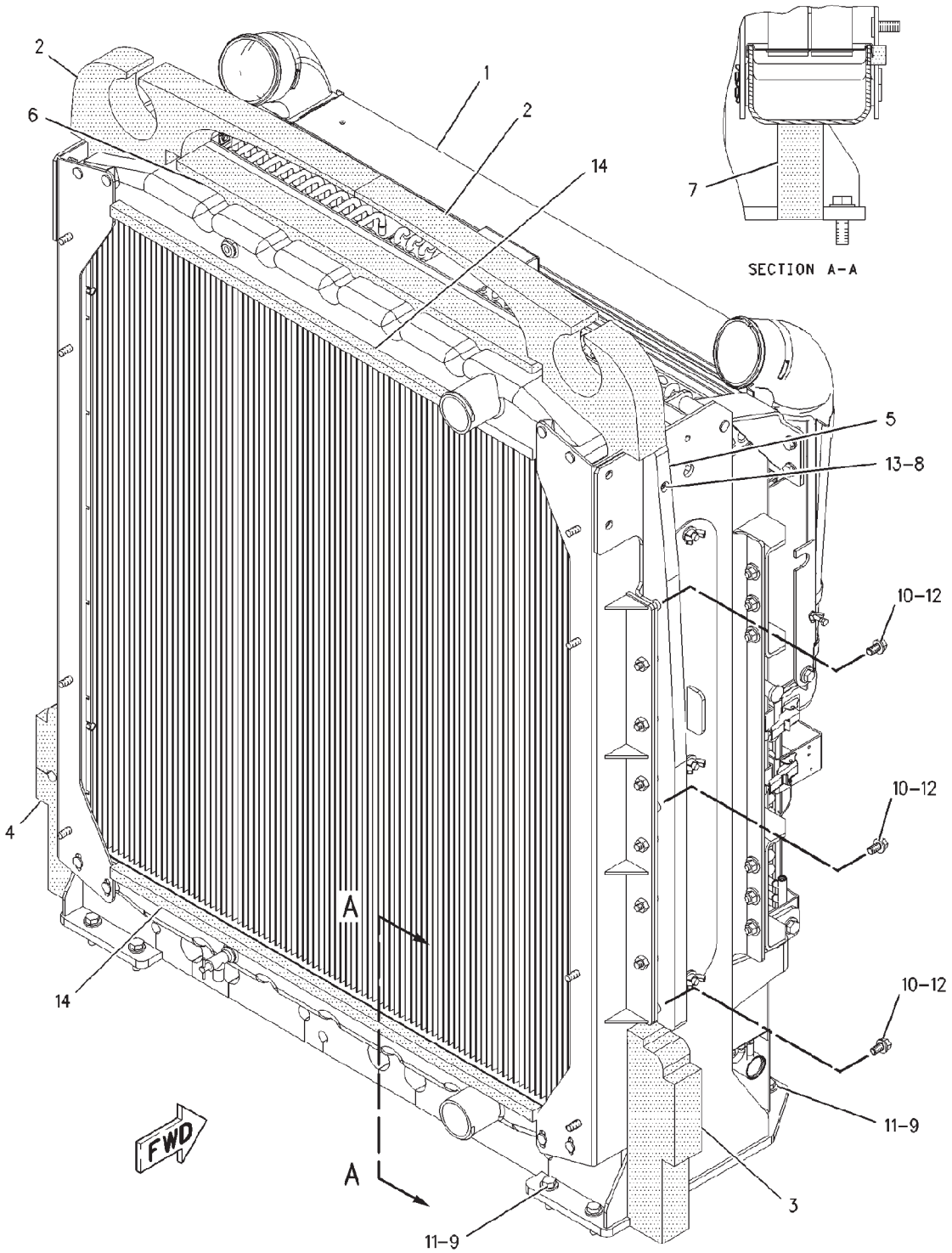

00887515

COOLER GP & MOUNTING - 190-1482

ITEM	NUMBER	QTY	DESCRIPTION
-	190-1482	--	COOL GP-ENGINE OIL [A] (NOT SERVICED)
1	229-8899	1	CORE GP & MOUNTING (NOT SERVICED) (SEE BREAKDOWN FOR COMPONENTS)
2	185-2225	2	BAFFLE
3	185-2226	1	BAFFLE (RH)
4	185-2227	1	BAFFLE (LH)
5	206-7565	2	GUIDE
6	221-2762	1	BAFFLE
7	221-2763	1	BAFFLE
8	400173X1	2	BOLT-SOCKET HEAD (M6X1X40MM)
9	400050X1	8	BOLT (M12X1.75X40MM)
10	400060X1	6	BOLT (M8X1.25X40MM)
11	400357X1	8	WASHER-HARD (M12X25.5X3)
12	400599X1	6	WASHER-HARD (M8X20.5X2)
13	CH8T-4205	2	WASHER (7.2IDX14.5X2)
14	-----		NOT USED

[A] PART OF 172-5361;172-5362;172-5363;
172-5364;187-1741;187-1742;187-1743;
187-1744 INSTALLATION AR-ENGINE

00887515
PR: t05i29k58b0038

CORE & MOUNTING GP - 229-8899

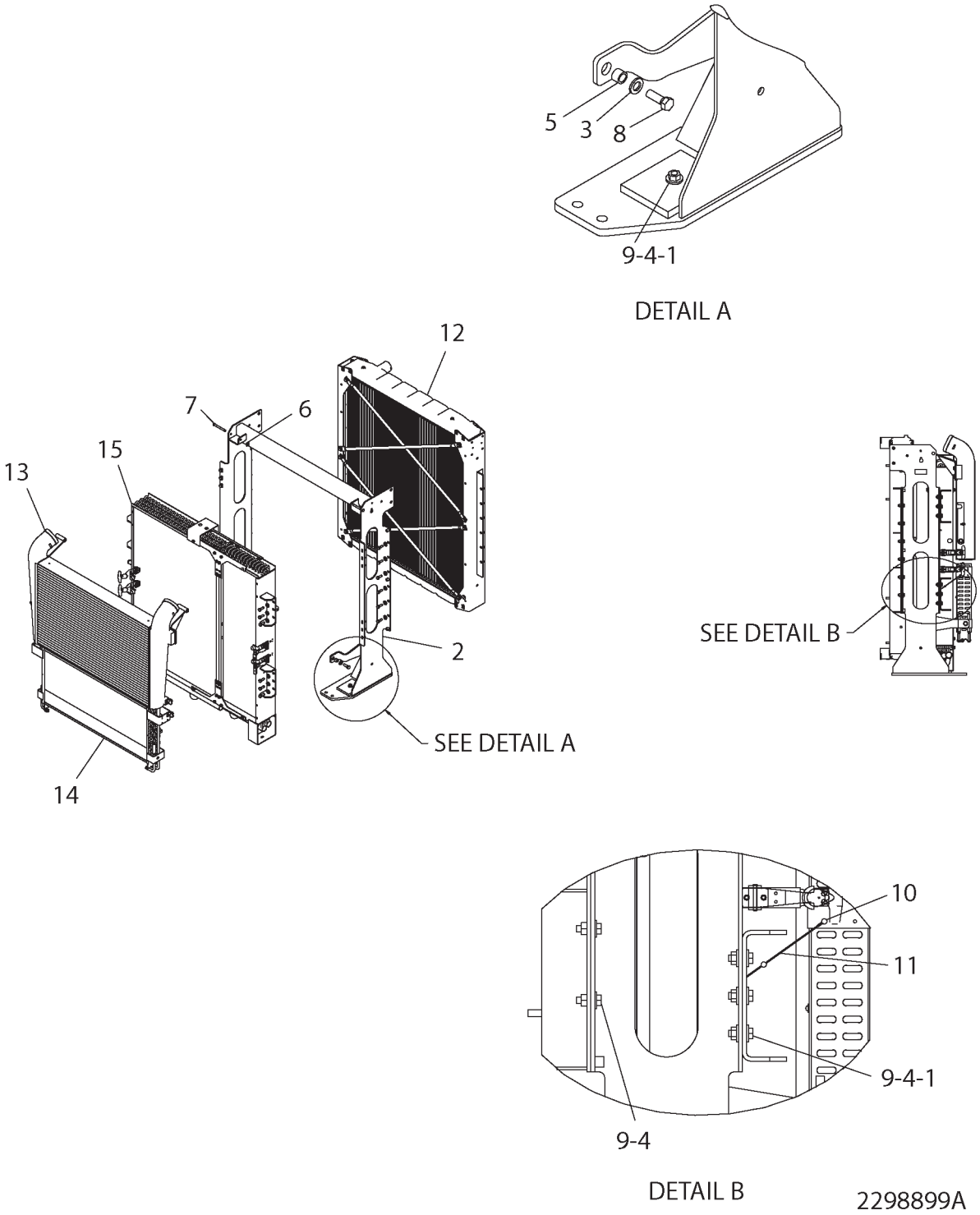

CORE & MOUNTING GP - 229-8899

ITEM	NUMBER	QTY	DESCRIPTION
-	229-8899	--	CORE & MOUNTING GP [A]
1	WR522218	14	NUT-M10-1.5,CL10.9,ZN,H,REG
2	198-2898	1	SUPPORT AS-CORE
3	400357X1	2	WASHER-HARD-M12X25.50DX3THK
4	CH7X-7729	40	WASHER-11IDX5ODX3MM
5	CH9X-1482	2	SPACER-19ODX13.51IDX13.51 ZN
6	CH183-8033	2	CLIP-8DIA
7	198-2900	2	PIN
8	400202X1	2	BOLT-M12X1.75X35 PH&O LK 10.9
9	400058X1	26	BOLT-M10X1.5X30 ZNDI HHD 10.9
10	CH6C-3679	2	RIVET-BLIND2-6.5 GRIPX4.75 SST
11	221-0807	1	CABLE AS
12	221-1229	1	RADIATOR GP-(BASIC) (D)
13	229-8895	1	AFTERCOOLER GP-AIR
14	229-8893	1	CORE AS-CONDENSER
15	229-8898	1	COOLER GP-OIL

[A] PART OF 190-1482 COOLER & MTG GP

2298899A
PR: t05i29k58b0039

FAN GP - 206-6397
ENGINE

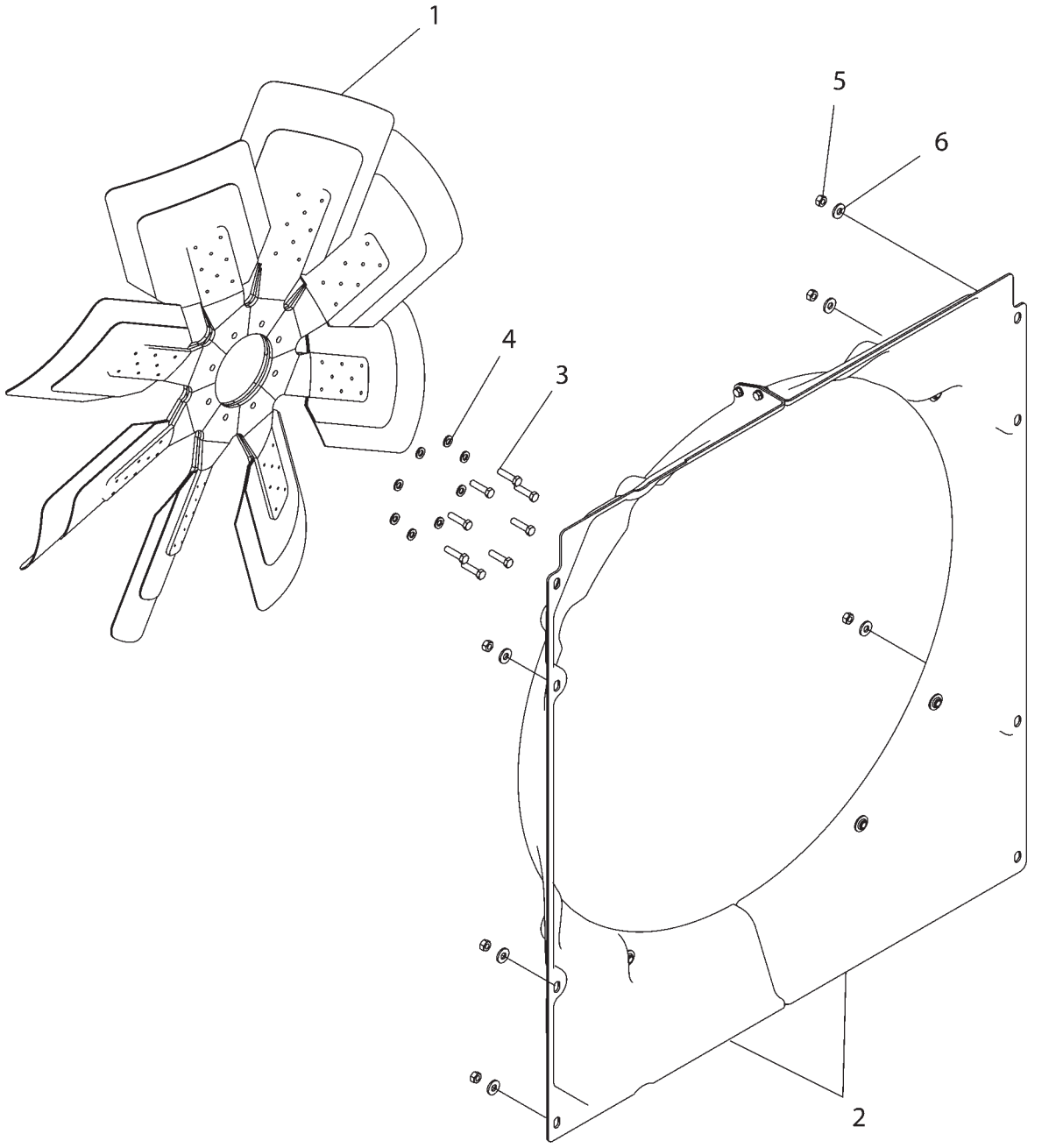

2066397A

FAN GP - 206-6397
ENGINE

ITEM	NUMBER	QTY	DESCRIPTION
-	206-6397	--	FAN GP [A] (NOT SERVICED)
1	CH204-5041	1	SPIDER-FAN
2	212-7187	1	SHROUD GP-RADIATOR (COMPONENTS NOT SERVICED SEPARATELY)
3	400019X1	8	BOLT (3/8-16X1.5 IN)
4	CH7X-7729	8	WASHER (11X25X3)
5	WR522218	8	NUT (M10X1.5)
6	CH8T-4896	8	WASHER-HARD (10X18.5X2.5)

[A] PART OF 172-5361;172-5362;172-5363; 172-5364;187-1741;187-1742;187-1743; 187-1744 INSTALLATION AR-ENGINE

2066397A
PR: t05i29k58b0040

LINES GP-COOLANT - 172-5345
MT835 & MT845

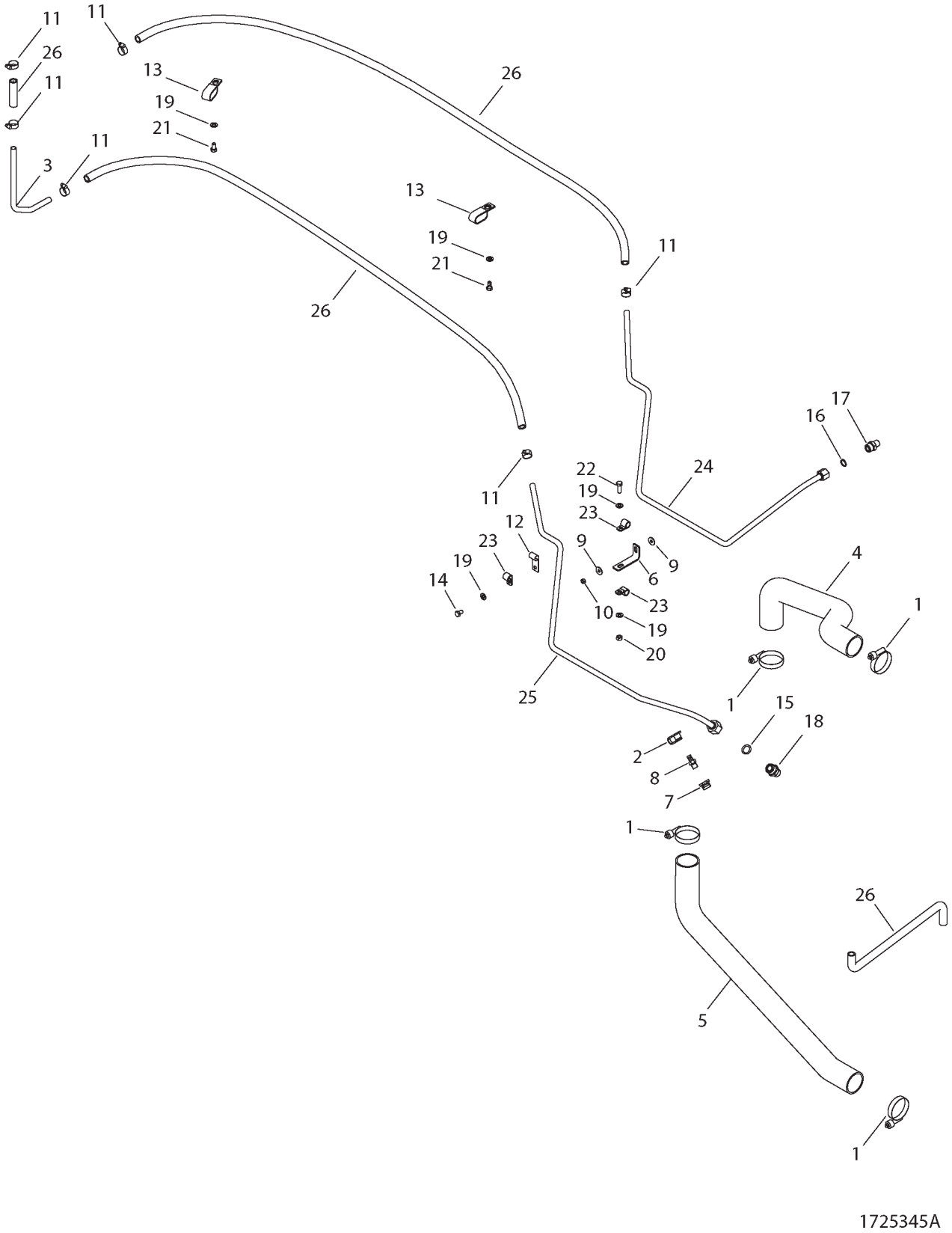

1725345A

LINES GP-COOLANT - 172-5345

MT835 & MT845

ITEM	NUMBER	QTY	DESCRIPTION
-	172-5345	--	LINES GP-COOLANT [A] (NOT SERVICED)
1	400699X1	4	CLAMP-HOSE (UNIFORM LOAD)
2	400655X1	1	CAP-DUST (ENGINE COOLANT)
3	195-4519	1	TUBE
4	205-1647	1	HOSE-RADIATOR (INLET)
5	205-1648	1	HOSE-RADIATOR (OUTLET)
6	215-8051	1	BRACKET
7	400647X1	1	BSHG-RDCR,HEX,0.75X0.37NPTF,BR
8	400654X1	1	VALVE-FLUID SAMPLING 6 NPTF
9	400077X1	2	WASHER-HARD 8.8IDX25.5ODX2 ORG
10	400340X1	1	NUT-M8X1.25X13 HEX ZND1
11	400108X1	7	CLAMP-HOSE SST 15.9-26.9X13.5
12	CH5F-1648	1	CLIP-LOOP 15.88 ID
13	400667X1	2	CLIP-TWO TUBE COATED
14	400171X1	1	BOLT-M10X1.5X16 PH&O HHD 10.9
15	400366X1	1	SEAL-O-RING 22.5 ODX1.78 DIA
16	400322X1	1	SEAL-O-RING 19.28 ODX1.78 DIA
17	400693X1	1	ADAPTER-STR,0.50MNPTFX-10MORFS
18	400694X1	1	ADAPTER-STR,0.75MNPTFX-12MORFS
19	400287X1	5	WASHER-HARD 11IDX21ODX2.5 ZND1
20	WR522218	1	NUT-M10-1.5,CL10.9,ZN,H,REG
21	400040X1	2	BOLT-M10X1.5X20 ZNDI HHD 10.9
22	400058X1	1	BOLT-M10X1.5X30 ZNDI HHD 10.9
23	400702X1	3	CLIP-ONE TUBE COATED
24	500517D1	1	TUBE AS.
25	500518D1	1	TUBE AS.
26	CH5P-0767	AR	HOSE-BULK 15.88 ID (438 CM)

[A] PART OF 172-5361;172-5362;187-1741;
187-1742 INSTALLATION AR

1725345A
PR: t05i29k58b0041

LINES GP-COOLANT - 172-5344

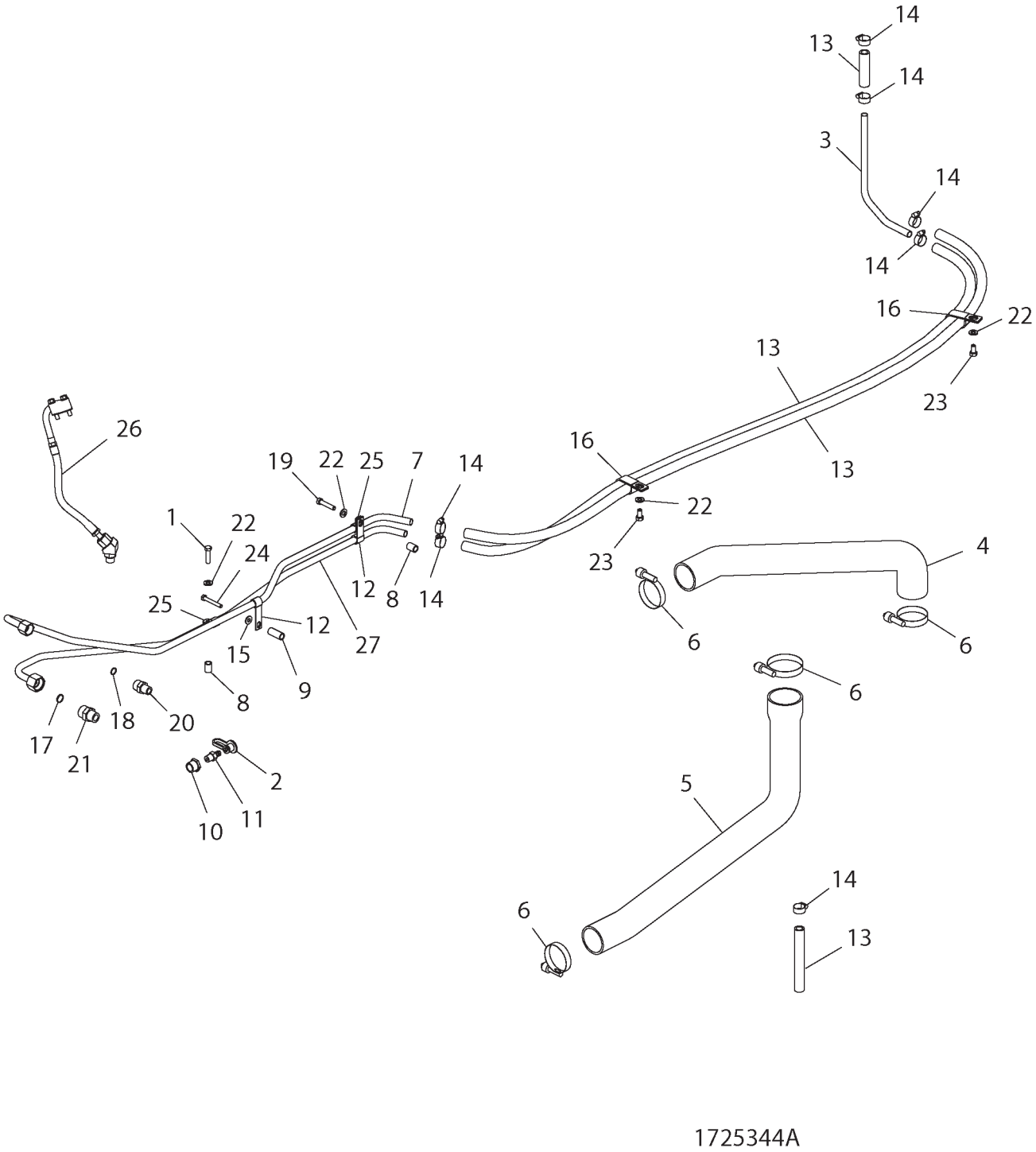

LINES GP-COOLANT - 172-5344

ITEM	NUMBER	QTY	DESCRIPTION
-	172-5344	--	LINES GP-COOLANT [A] (NOT SERVICED)
1	400019X1	1	BOLT-3/8-16X38.1 ZNDI HHD 10.9
2	400655X1	1	CAP-DUST (ENGINE COOLANT)
3	195-4519	1	TUBE
4	205-1645	1	HOSE-RADIATOR (INLET)
5	205-1646	1	HOSE-RADIATOR (OUTLET)
6	400699X1	4	CLAMP-HOSE (UNIFORM LOAD)
7	209-3392	1	TUBE AS
8	CH209-3394	2	SPACER-17.14ODX12.52IDX22.4 ZN
9	CH209-3395	1	SPACER-17.14ODX12.52IDX40 ZN
10	400647X1	1	BSHG-RDCR,HEX,0.75X0.37NPTF,BR
11	400654X1	1	VALVE-FLUID SAMPLING 6 NPTF
12	400657X1	2	CLIP-ONE TUBE-COATED
13	CH5P-0767	AR	HOSE-BULK 15.88 ID (448CM)
14	400108X1	7	CLAMP-HOSE SST 15.9-26.9X13.5
15	400599X1	1	WASHER-HARD,M8X20.5ODX2THK
16	400667X1	2	CLIP-TWO TUBE COATED
17	400366X1	1	SEAL-O-RING 22.5ODX1.78 DIA
18	400322X1	1	SEAL-O-RING 19.28IDX1.78 DIA
19	400175X1	1	BOLT-3/8-16X47.6 ZNDI HHD 10.9
20	400693X1	1	ADAPTER-STR,0.50MNPTFX-10MORFS
21	400694X1	1	ADAPTER-STR,0.75MNPTFX-12MORFS
22	400287X1	4	WASHER-HARD 11IDX21ODX2.5 ZND1
23	400040X1	2	BOLT-M10X1.5X20 ZNDI HHD 10.9
24	400247X1	1	BOLT-5/16-18X57.1 ZNDI HHD10.9
25	400702X1	2	CLIP-ONE TUBE COATED
26	503583D1	1	LINES GP-TURBOCHARGER (S/N: EFF BAM50670;BBP50501;BCC50790;BDS50965) (SEE BREAKDOWN FOR COMPONENTS)
27	209-3389	1	TUBE AS. (S/N: PRIOR BAM50670;BBP50501; BCC50790;BDS50965)
27	502556D1	1	TUBE AS. (S/N: EFF BAM50670;BBP50501; BCC50790;BDS50965)

[A] PART OF 172-5363;172-5364;187-1743; 187-1744 INSTALLATION AR

1725344A
PR: t05i29k58b0042

LINES GP-TURBOCHARGER - 503583D1

S/N: EFF 3/14/05

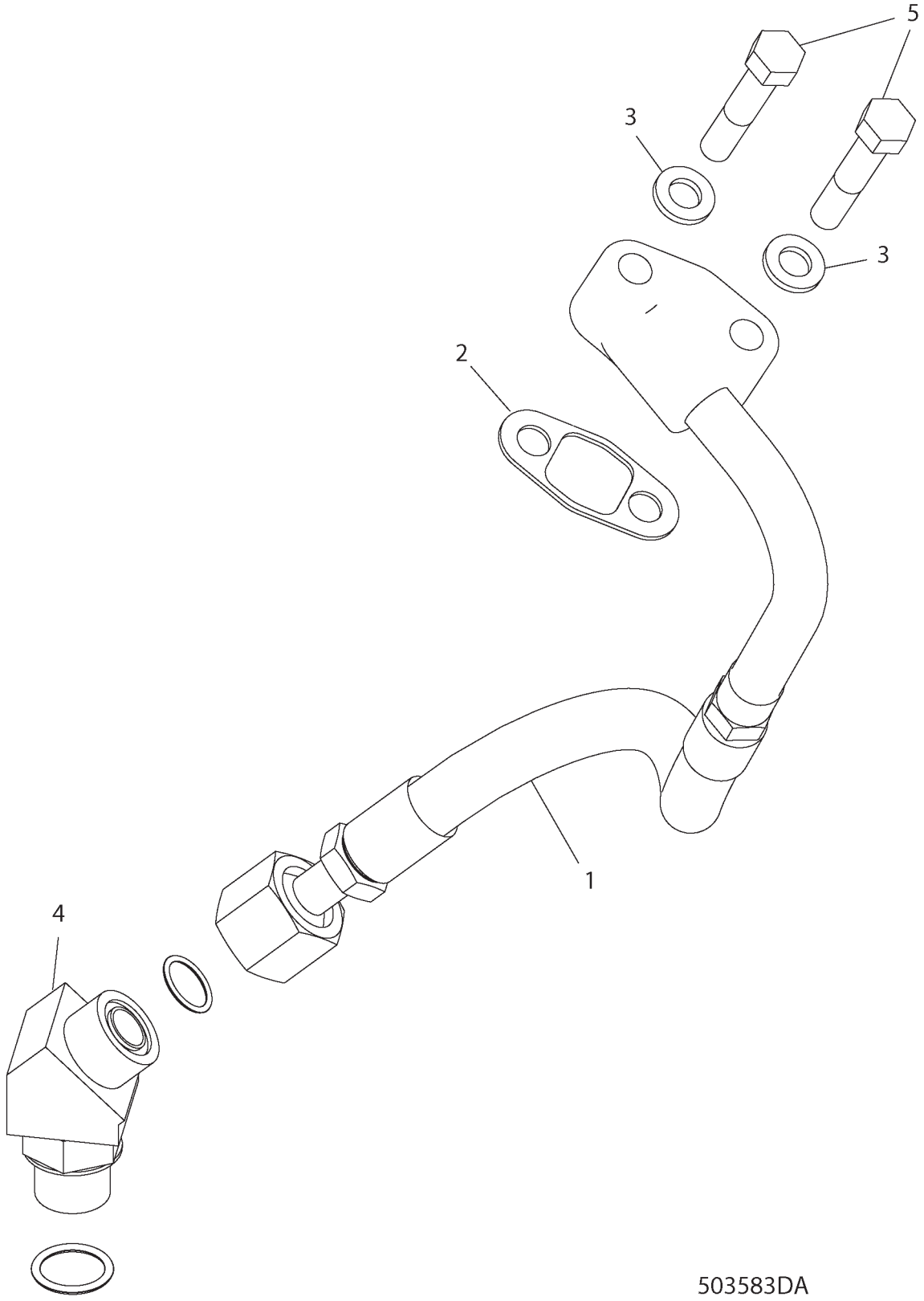

LINES GP-TURBOCHARGER - 503583D1

S/N: EFF 3/14/05

ITEM	NUMBER	QTY	DESCRIPTION
-	503583D1	--	LINES GP-TURBOCHARGER [A] (NOT SERVICED)
1	231-5219	1	HOSE AS
2	198-6068	1	SEAL-INTEGRAL
3	5M-2894	2	WASHER-HARD M10(3/8) 18.5OD
4	CH155-3504	1	ELBOW AS-45DEG 10ORFS X 10STOR
	400319X1	1	SEAL-O-RING (19.18IDX2.46DIA)
	CH6V-9003	1	ELBOW-SEAL
	400322X1	1	SEAL-O-RING (19.28ODX1.78DIA)
5	1C-2251	2	BOLT

[A] PART OF 172-5344 LINES GP-COOLANT

503583DA
PR: t05i29k58b0043

GUARD GP-FAN BLAST - 500038D1

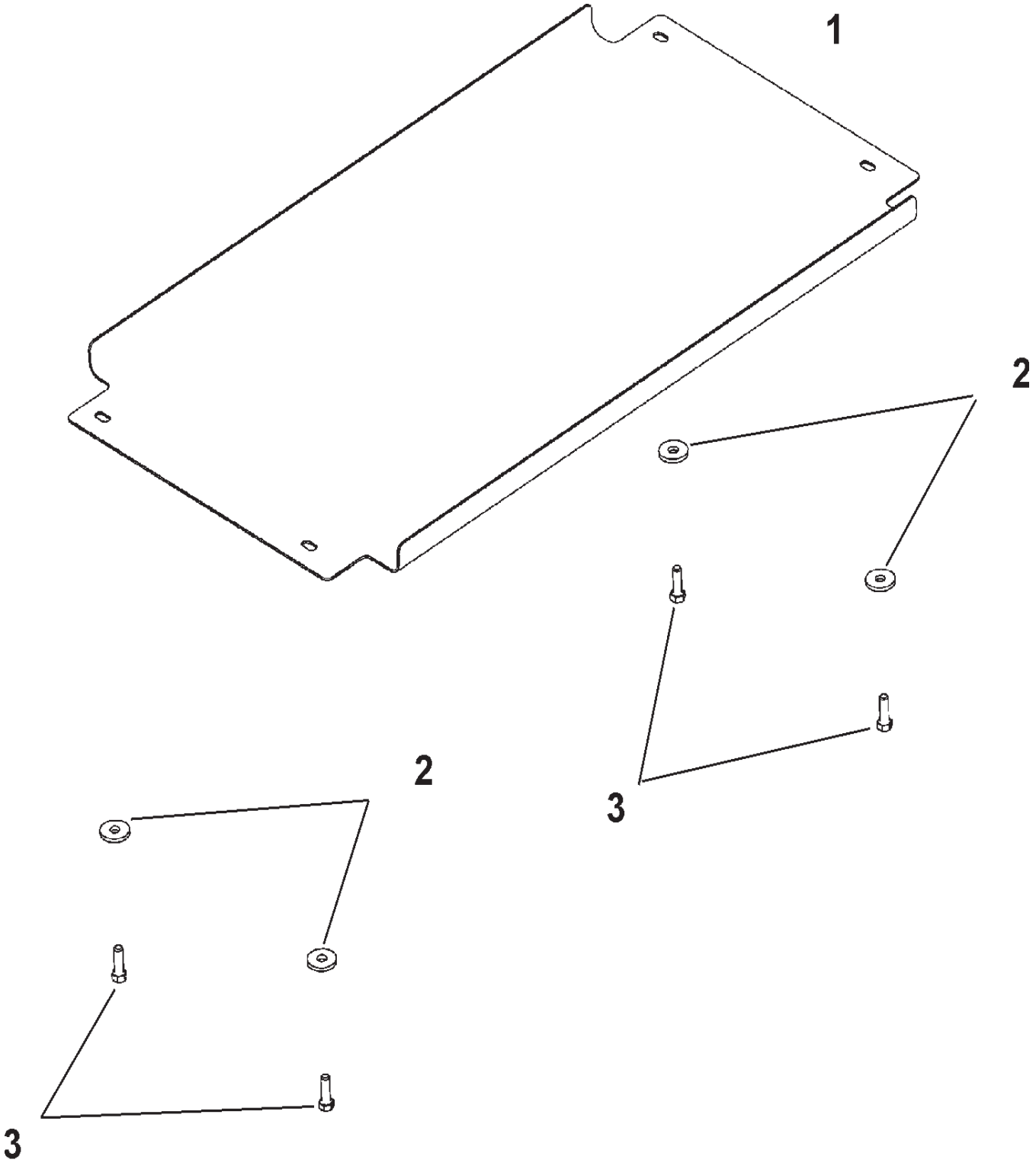

500038D1

GUARD GP-FAN BLAST - 500038D1

ITEM	NUMBER	QTY	DESCRIPTION
-	500038D1	--	GUARD GP-FAN BLAST (SERVICED BY COMPONENTS)
1	204-0627	1	SHIELD-FAN BLAST
2	CH7X-0618	4	WASHER-HARD (13.5X40X5)
3	400064X1	4	BOLT (M12X1.75X35)

500038D1
PR: t05i29k58b0044

GUARD GP-FAN - 228-4631
MT835 & MT845

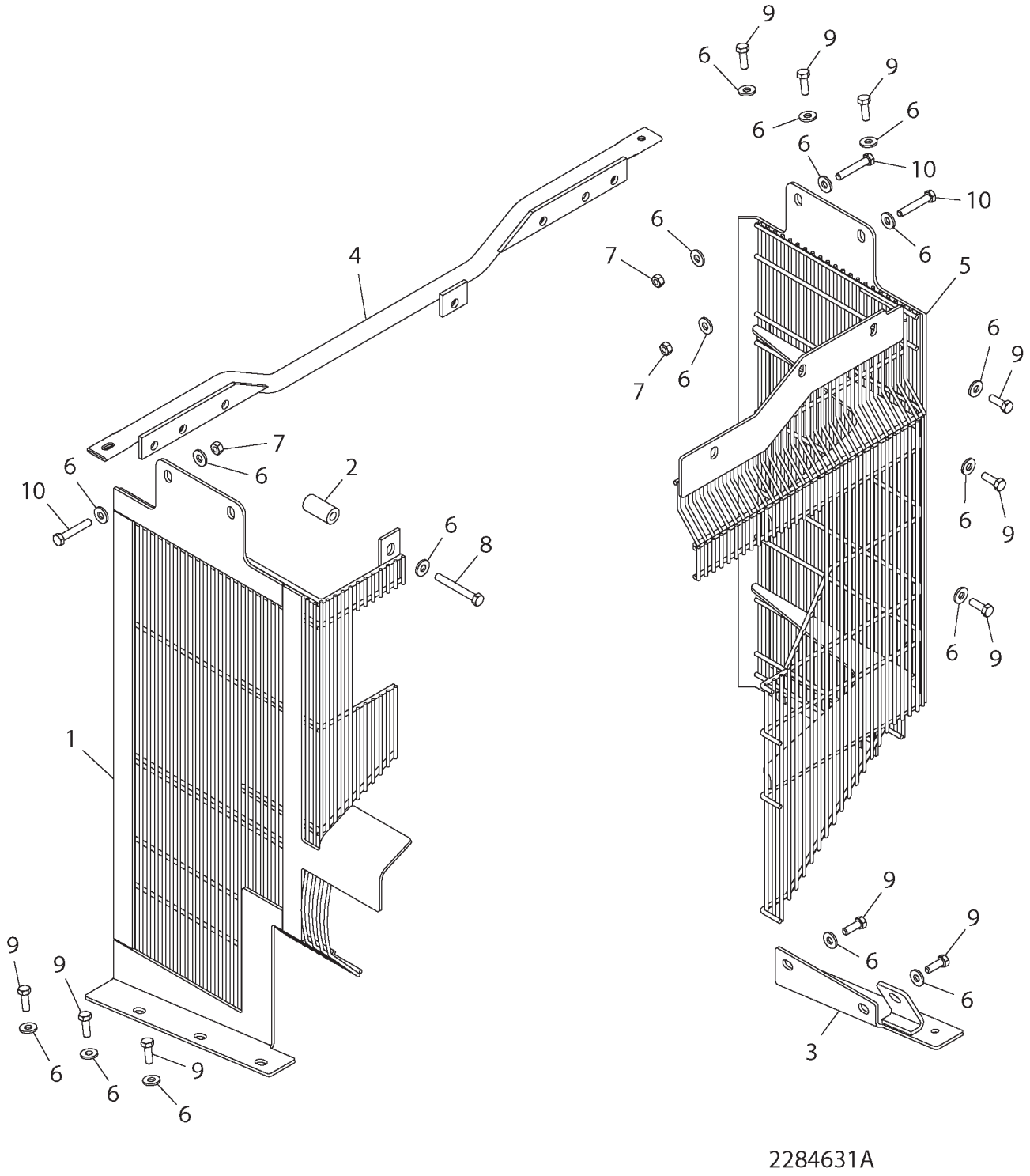

GUARD GP-FAN - 228-4631

MT835 & MT845

ITEM	NUMBER	QTY	DESCRIPTION
-	228-4631	--	GUARD GP-FAN
1	502488D1	1	GUARD ASSEMBLY (LH)
2	CH227-8229	1	SPACER-25.4ODX19.05IDX49.1 STL
3	228-4642	1	BRACKET AS.
4	228-4643	1	SUPPORT AS.
5	501045D1	1	GUARD AS. (RH)
6	CH7X-7729	18	WASHER-11IDX5ODX3MM
7	WR522218	3	NUT-M10-1.5,CL10.9,ZN,H,REG
8	400044X1	1	BOLT-M10X1.5X80 ZNDI HHD 10.9
9	400058X1	11	BOLT-M10X1.5X30 ZNDI HHD 10.9
10	400239X1	3	BOLT-M10X1.5X60 ZNDI HHD 10.9

2284631A
PR: t05i29k58b0045

GUARD GP-FAN - 228-4632
MT855 & MT865

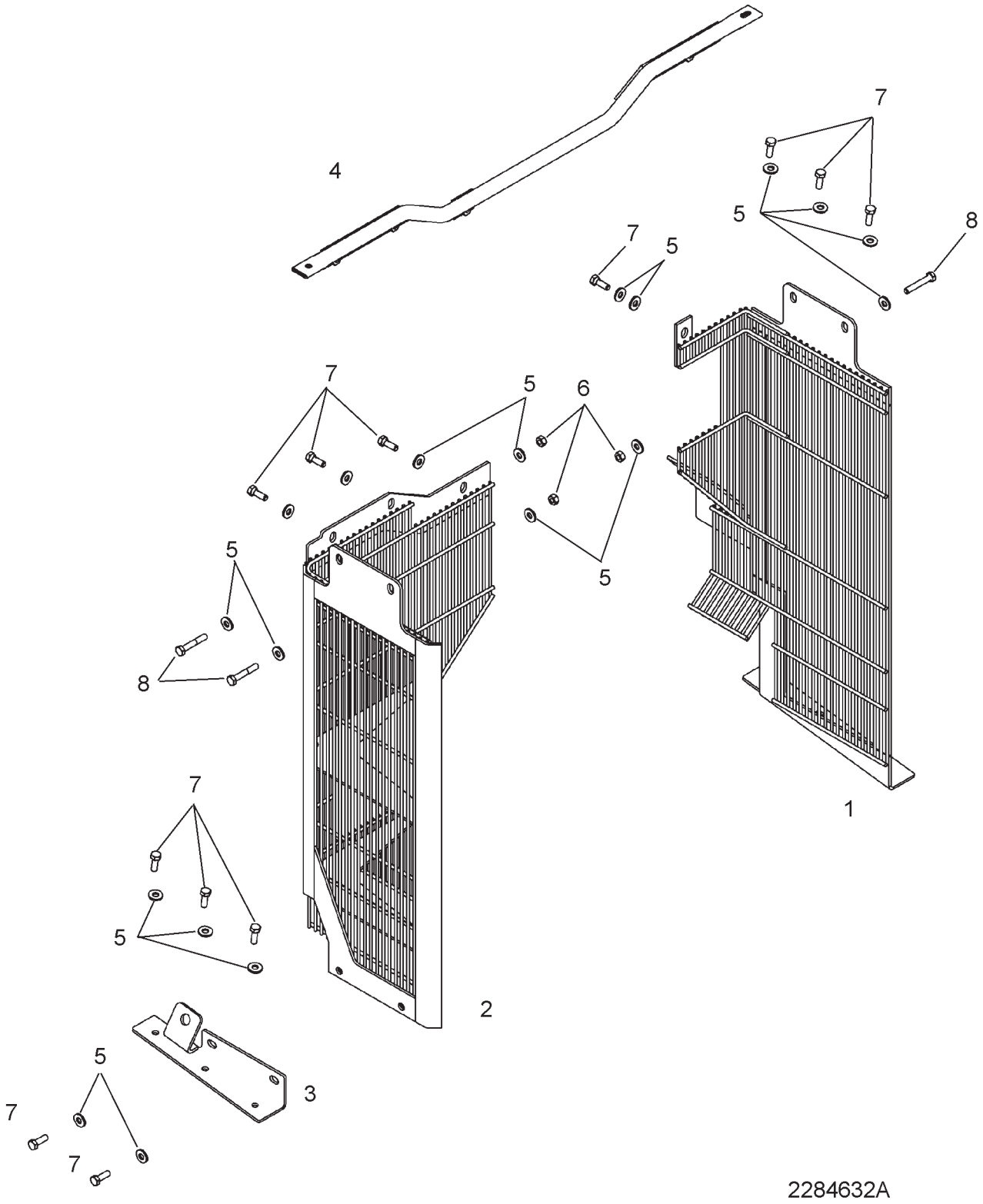

GUARD GP-FAN - 228-4632

MT855 & MT865

ITEM	NUMBER	QTY	DESCRIPTION
-	228-4632	--	GUARD GP-FAN
1	227-8224	1	GUARD AS. (LH)
2	228-4633	1	GUARD AS. (RH)
3	228-4642	1	BRACKET AS.
4	228-4643	1	SUPPORT AS.
5	CH7X-7729	19	WASHER-11IDX5ODX3MM
6	WR522218	3	NUT
7	400058X1	12	BOLT-M10X1.5X30 ZNDI HHD
8	400239X1	3	BOLT-M10X1.5X60 ZNDI HHD 10.9

2284632A
PR: t05i29k58b0046

TANK GP-EXPANSION & COOLANT - 194-7966
MT835 & MT845

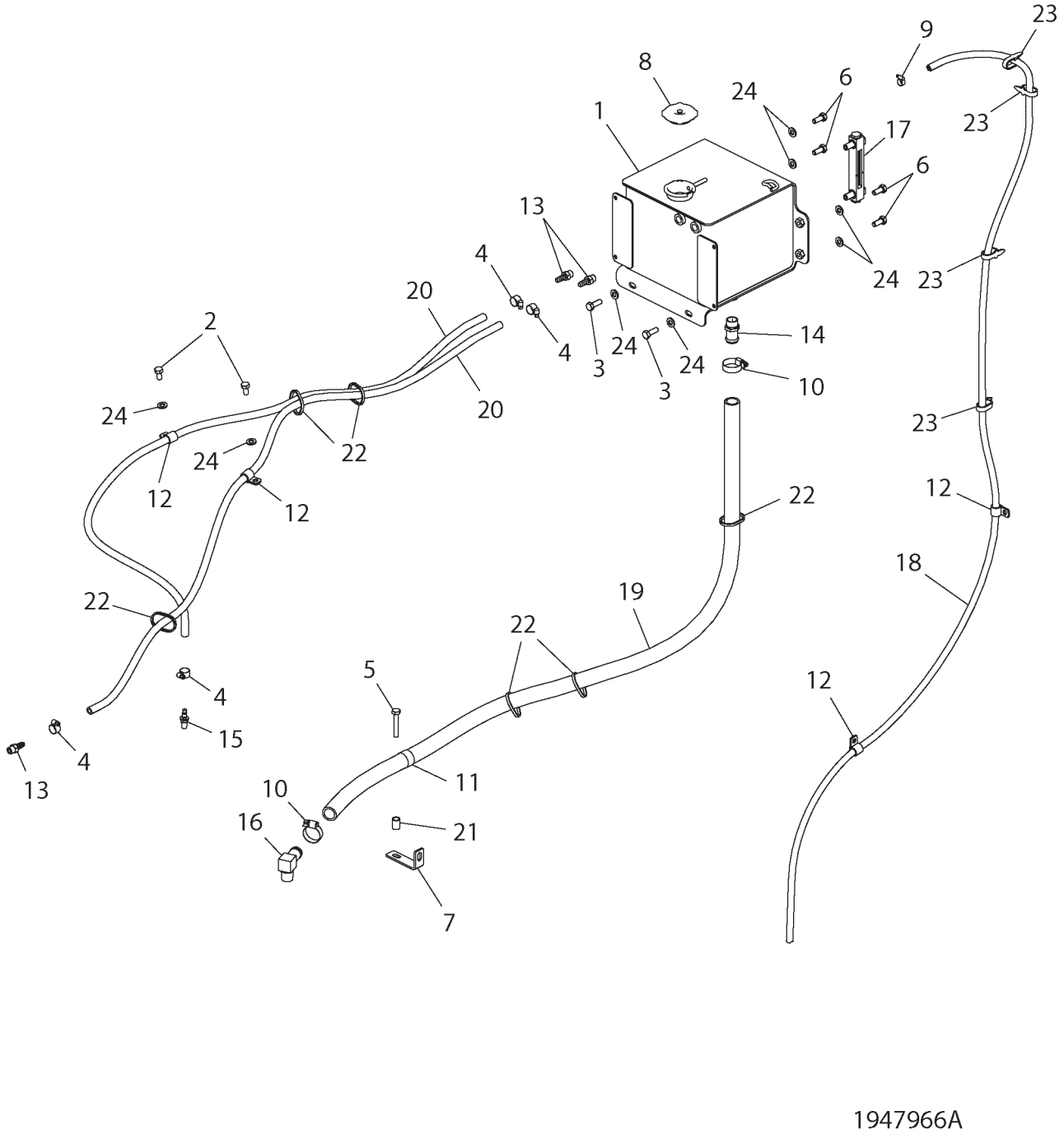

TANK GP-EXPANSION & COOLANT - 194-7966

MT835 & MT845

ITEM	NUMBER	QTY	DESCRIPTION
-	194-7966	--	TANK GP-EXPANSION & COOLANT [A] (NOT SERVICED)
1	226-7570	1	TANK AS
2	400040X1	2	BOLT-M10X1.5X20 ZNDI HHD 10.9
3	400058X1	2	BOLT-M10X1.5X30 ZNDI HHD 10.9
4	400109X1	4	CLAMP-HOSE SST 11.1-19.8X13.5
5	400239X1	1	BOLT-M10X1.5X60 ZNDI HHD 10.9
6	400039X1	4	BOLT-M10X1.5X25 ZNDI HHD 10.9
7	215-8051	1	BRACKET
8	031-1119	1	CAP AS-RADIATOR
9	CH1P-4278	1	CLAMP-HOSE 5.5-15.88 ID X 8
10	400701X1	2	CLAMP-HOSE SST22.2-44.5IDX13.5
11	400597X1	1	CLIP-31.75 ID M10 OR 3/8
12	400702X1	4	CLIP-ONE TUBE COATED
13	CH003-7764	3	CONNECTOR-6 NPTFX9.52 OD BARB
14	CH053-2313	1	CONNECTOR-12NPTF X 25 BARB BRS
15	CH006-7801	1	CONNECTOR-6NPTFX9.52 BARB
16	CH7W-1890	1	ELBOW-90DEG.12NPTFX25.4OD BARB
17	201-4653	1	GAGE-SIGHT
	CH114-4231	2	BOLT-MTG (1/2-20X2AX45.30MM)
	CH122-8352	4	SEAL-O-RING (15.54IDX2.62DIA)
18	CH5P-1420	--	HOSE (BULK) 7.92 DIA (253CM)
19	CH146-7453	--	HOSE-BULK 25.4 ID HTEMP L PRES (170CM)
20	CH5P-1442	--	HOSE-BULK 9.52ID HI TEMP (320CM)
21	CH209-3394	1	SPACER-17.14ODX12.52IDX22.4 ZN
22	CH7K-1181	6	STRAP-CABLE 0.19-4.00
23	400837X1	4	STRAP-CABLE (PLASTIC)
24	400287X1	8	WASHER-HARD 11IDX21ODX2.5 ZND1

[A] PART OF 172-5361;172-5362;187-1741
187-1742 INSTALLATION AR

1947966A
PR: t05i29k58b0047

TANK GP-EXPANSION & COOLANT - 185-2220
MT855 & MT865

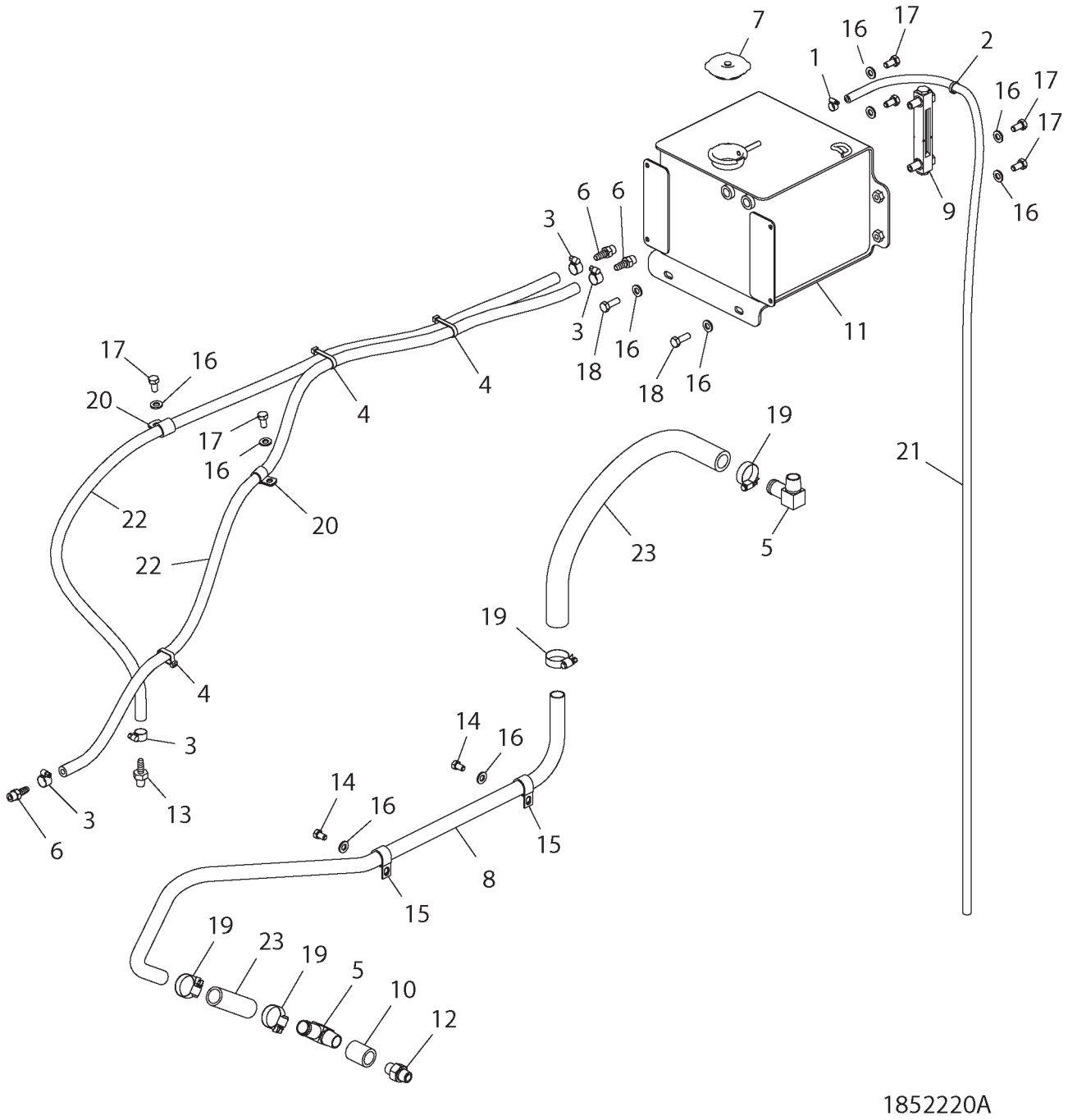

TANK GP-EXPANSION & COOLANT - 185-2220

MT855 & MT865

ITEM	NUMBER	QTY	DESCRIPTION
-	185-2220	--	TANK GP-EXP & COOLANT [A] (NOT SERVICED)
1	CH1P-4278	1	CLAMP-HOSE 5.5-15.88 ID X 8
2	400837X1	1	STRAP-CABLE 44.45X4.93MM (SOME UNITS)
3	400109X1	4	CLAMP-HOSE SST 11.1-19.8X13.5
4	CH7K-1181	3	STRAP-CABLE 0.19-4.00
5	CH7W-1890	2	ELBOW-90DEG.12NPTFX25.4OD BARB
6	CH003-7764	3	CONNECTOR-6 NPTFX9.52 OD BARB
7	031-1119	1	CAP AS-RADIATOR
8	201-4652	1	TUBE
9	201-4653	1	GAGE-SIGHT
10	217-9673	1	COUPLING-12 NPTF
11	226-7570	1	TANK AS
12	CH004-7270	1	NIPPLE-12 NPTF
13	CH2R-8613	1	ADAPTER-8 NPTF X 9.52 OD BARB
14	400157X1	2	BOLT-3/8-16X15.8 ZNDI HHD 10.9
15	400688X1	2	CLIP LOOP 25.4ID
16	400287X1	10	WASHER-HARD 11IDX21ODX2.5 ZND1
17	400040X1	6	BOLT-M10X1.5X20 ZNDI HHD 10.9
18	400058X1	2	BOLT-M10X1.5X30 ZNDI HHD 10.9
19	400701X1	4	CLAMP-HOSE SST22.2-44.5IDX13.5
20	400702X1	2	CLIP-ONE TUBE COATED
21	CH5P-1420	AR	HOSE (BULK) 7.92 DIA (190CM)
22	CH5P-1442	AR	HOSE-BULK 9.52ID HI TEMP (317CM)
23	CH146-7453	AR	HOSE-BULK 25.4 ID HTEMP L PRES (65CM)

[A] PART OF 172-5363;172-5364;187-1743
187-1744 INSTALLATION AR

1852220A
PR: t05i29k58b0048

SHIELD GP-EXHAUST - 218-2883

EAME - ITALIAN MARKET

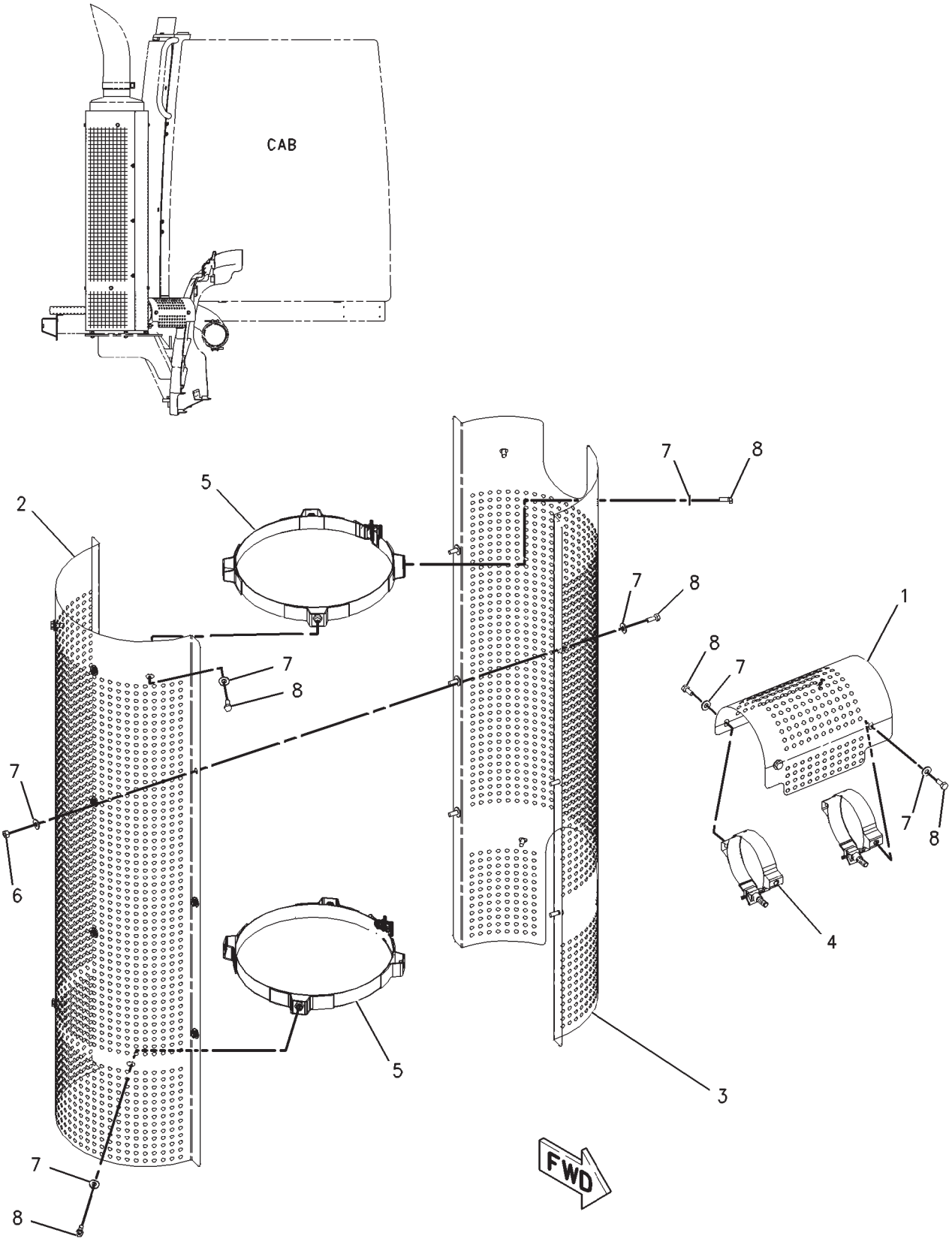

SHIELD GP-EXHAUST - 218-2883

EAME - ITALIAN MARKET

ITEM	NUMBER	QTY	DESCRIPTION
-	179-2257	--	COMPLETING AR-ITALIAN (REF ONLY-NOT SERVICED)
-	216-2883	--	SHIELD GP-EXHAUST [A] (NOT SERVICED) (INCLUDES ITEMS 1-8)
1	218-2886	1	SHIELD
2	218-2888	1	SHIELD
3	218-2889	1	SHIELD
4	CH218-2891	2	CLAMP
5	CH218-2892	2	CLAMP
6	400340X1	6	NUT (M8X1.25)
7	400599X1	24	WASHER-HARD (8.8X20.5X2)
8	400053X1	18	BOLT (M8X1.25X20MM)

[A] PART OF 179-2257 COMPLETING AR -ITALIAN

00894235
PR: t05i29k58b0049

AIR CLEANER GP - 172-5337
(MT855 & MT865)

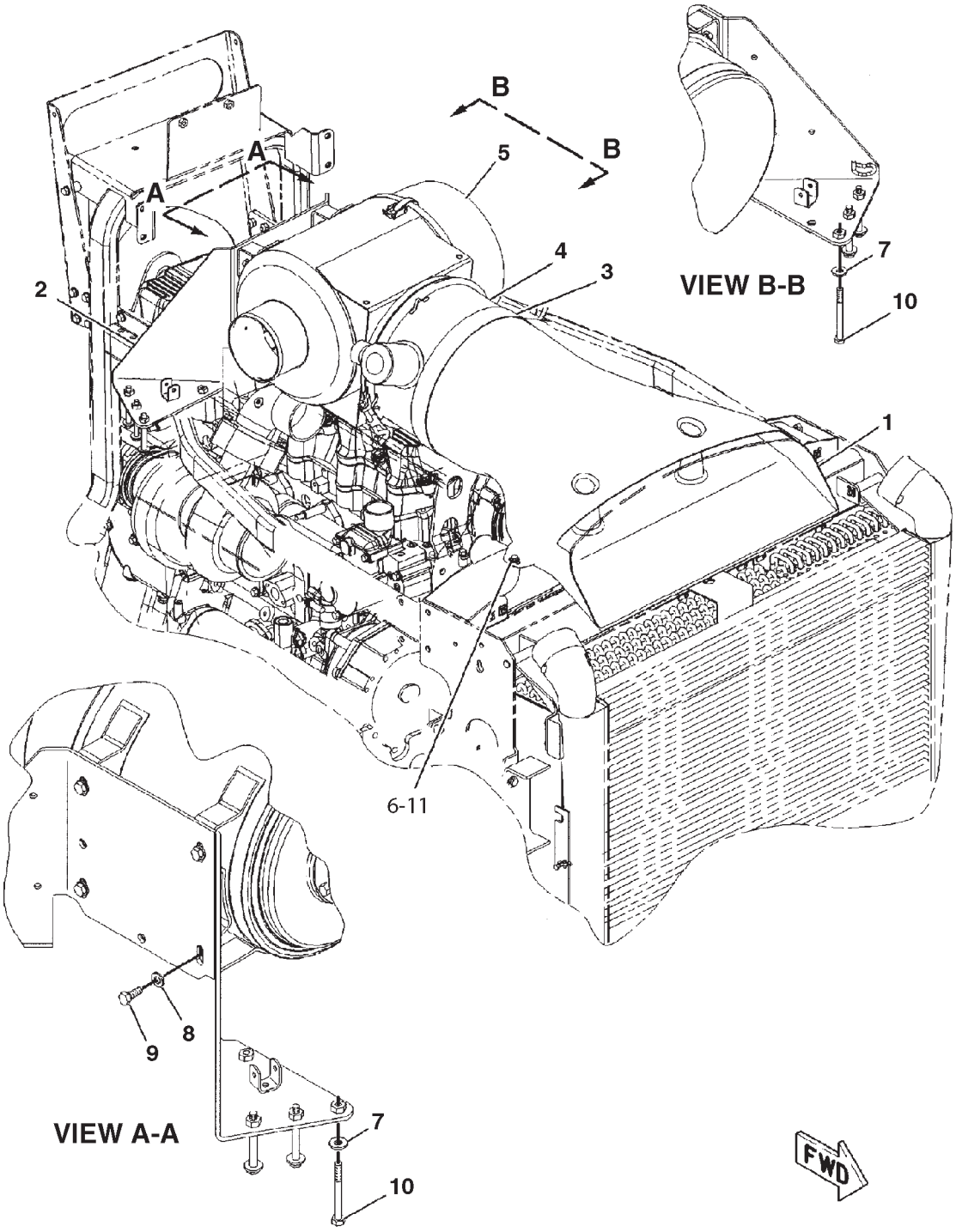

0869409A

AIR CLEANER GP - 172-5337
(MT855 & MT865)

ITEM	NUMBER	QTY	DESCRIPTION
-	172-5337	--	AIR CLEANER GP [A] (NOT SERVICED)
1	191-5988	1	DUCT-INLET
2	192-6460	1	BRACKET ASM
3	193-1423	1	SEAL
4	196-4055	1	BODY-PRECLEANER
5	196-4056	1	AIR CLEANER GP (SEE BREAKDOWN FOR COMPONENTS)
6	400599X1	2	WASHER-HARD (8.8X20.5X2)
7	CH7X-7729	6	WASHER (11X25X3)
8	400287X1	4	WASHER-HARD (11X21X2.5)
9	400039X1	4	BOLT (M10X1.5X25MM)
10	400225X1	6	BOLT (M10X1.5X90MM)
11	400227X1	2	BOLT (M8X1.25X16MM)

[A] PART OF 172-5363;172-5364;187-1743;
187-1744 INSTALLATION AR-ENGINE

0869409A
PR: t05i29k58b0050

AIR CLEANER GP - 172-5338
MT835 & MT845

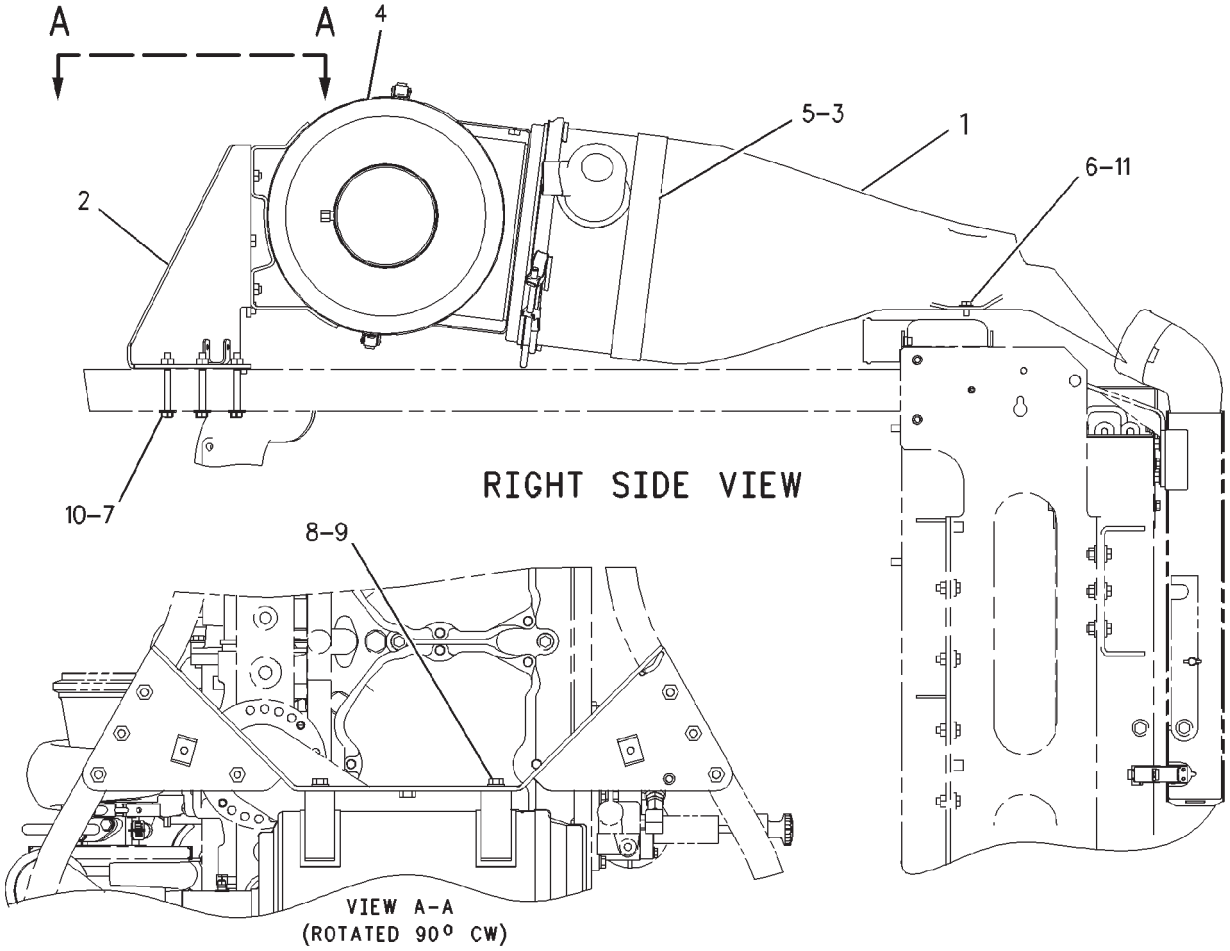

00888102

AIR CLEANER GP - 172-5338

MT835 & MT845

ITEM	NUMBER	QTY	DESCRIPTION
-	172-5338	--	AIR CLEANER GP [A] (NOT SERVICED)
1	191-5988	1	DUCT-INLET
2	192-6460	1	BRACKET ASM
	CH7T-1099	1	LINK
	CH8T-3490	10	NUT-WELD
3	192-8979	1	BODY-PRECLEANER
4	192-8980	1	AIR CLEANER GP
			(SEE BREAKDOWN FOR COMPONENTS)
5	193-1423	1	SEAL
6	400599X1	2	WASHER-HARD (8.8X20.5X2)
7	CH7X-7729	6	WASHER (11X25X3)
8	400287X1	4	WASHER-HARD (11X21X2.5)
9	400039X1	4	BOLT (M10X1.5X25MM)
10	400225X1	6	BOLT (M10X1.5X90MM)
11	400227X1	2	BOLT (M8X1.25X16MM)

[A] PART OF 172-5361;172-5362;187-1741;
187-1742 INSTALLATION AR-ENGINE

00888102
PR: t05i29k58b0051

AIR CLEANER AS-BASIC - 192-8980
MT835 & MT845

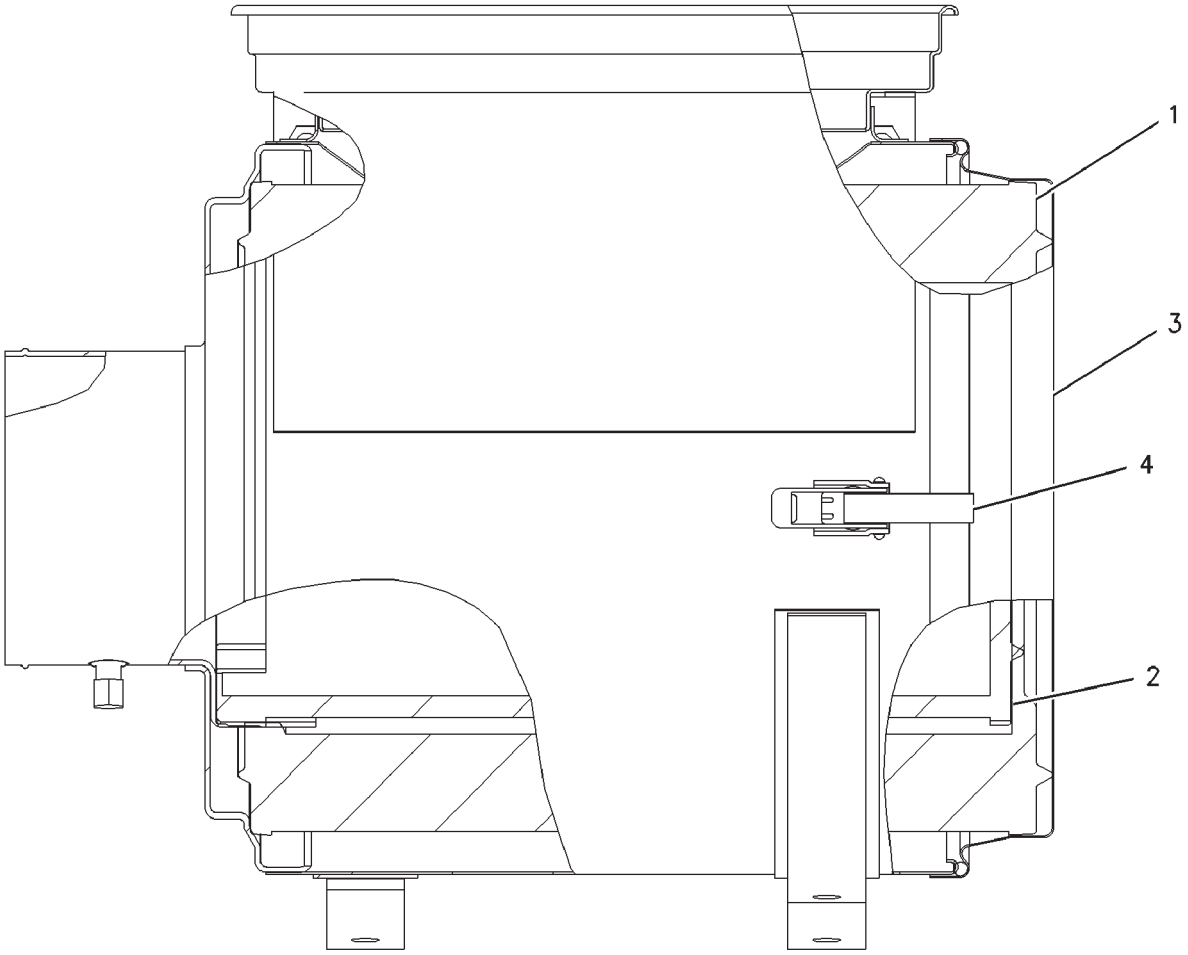

00887696

AIR CLEANER AS-BASIC - 192-8980

MT835 & MT845

ITEM	NUMBER	QTY	DESCRIPTION
-	192-8980	--	AIR CLEANER AS [A]
1	CH6I-2505	1	FILTER ELEMENT-AIR (PRIMARY)
2	CH6I-2506	1	FILTER ELEMENT-AIR (SECONDARY)
3	CH6I-4465	1	COVER ASM-AIR CLEANER
	CH101-2850	1	FILM-AIR CLEANER (RADIAL SEAL)
4	CH8N-4617	2	KIT-CLAMP (INCLS CLAMP & RIVET)

[A] PART OF 172-5338 AIR CLEANER GP

00887696
PR: t05i29k58b0052

AIR CLEANER AS-BASIC - 196-4056
(MT855 & MT865)

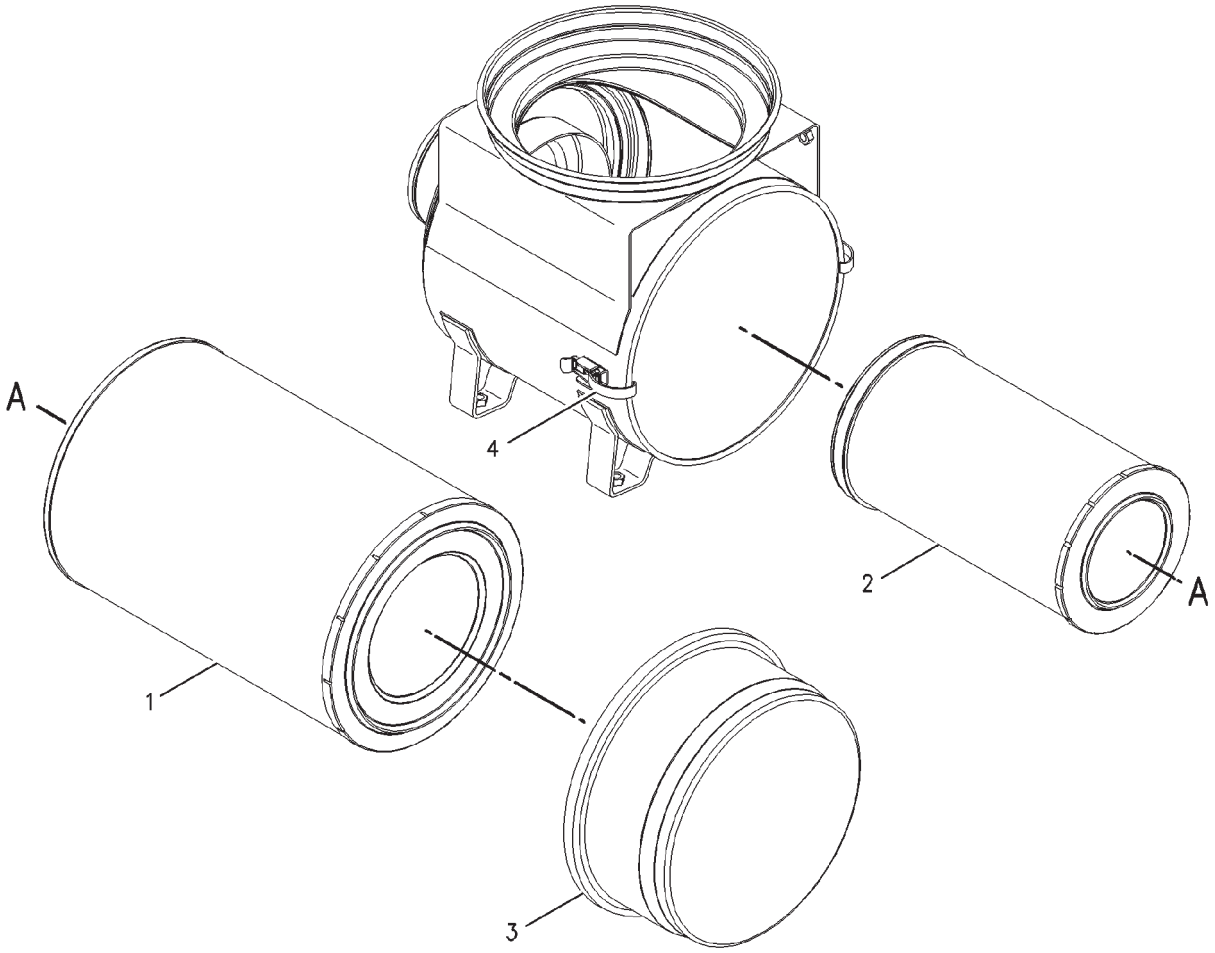

00874425

AIR CLEANER AS-BASIC - 196-4056
(MT855 & MT865)

ITEM	NUMBER	QTY	DESCRIPTION
-	196-4056	--	AIR CLEANER GP [A]
1	CH6I-2509	1	FILTER ELEMENT-AIR (PRIMARY)
2	CH6I-2510	1	FILTER ELEMENT-AIR (SECONDARY)
3	6I-4467	1	COVER-AIR CLEANER
	CH101-2850	1	FILM-AIR CLEANER (RADIAL SEAL)
4	CH8N-4617	2	KIT-AIR CLEANER CLAMP
			(SERVICED AS COMPLETE KIT ONLY)
			(INCLUDES CLIP ASM AND RIVET)

[A] PART OF 172-5337 AIR CLEANER GP

00874425
PR: t05i29k58b0053

LINES GP-AIR - 172-5342
MT835 & MT845

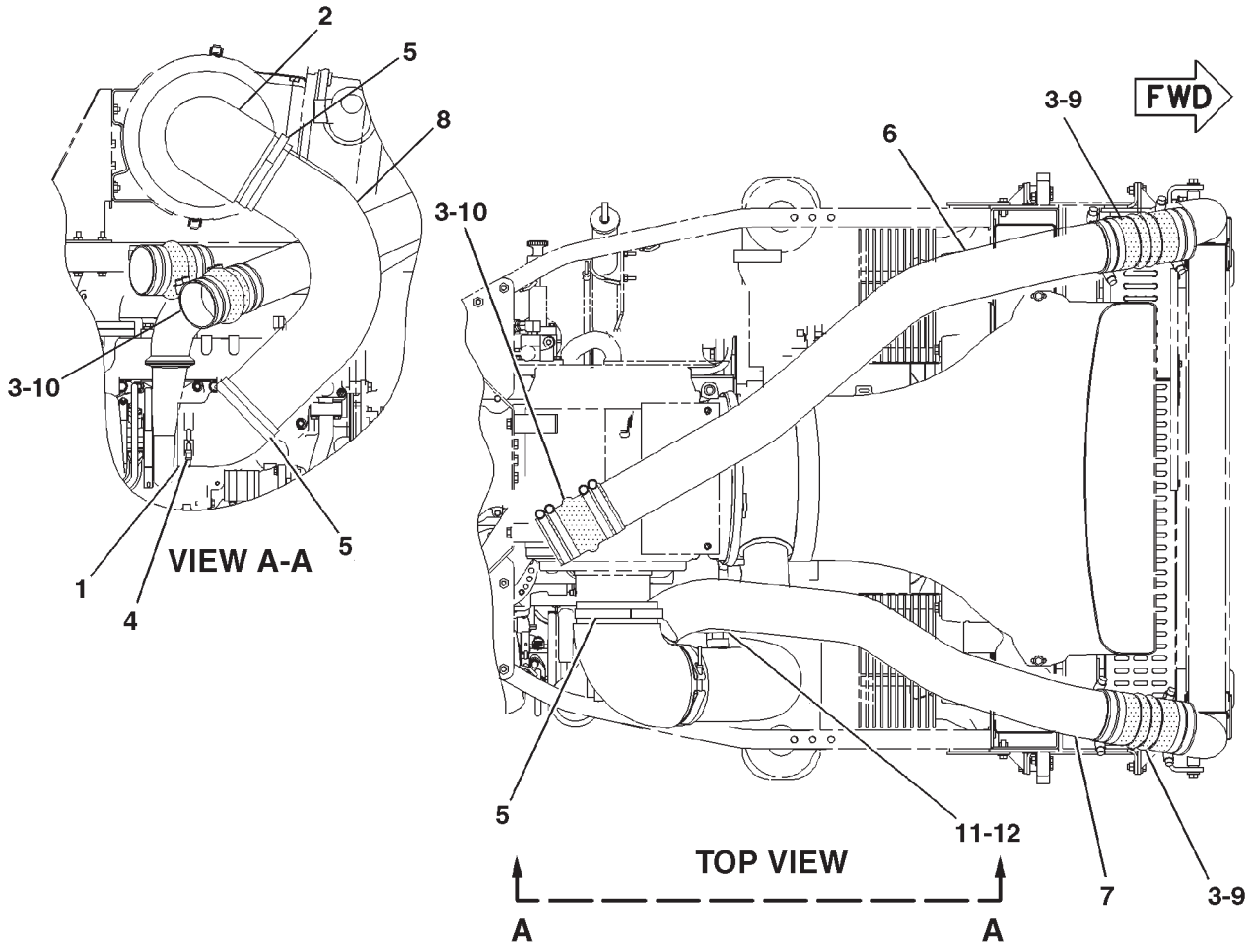

0887727A

LINES GP-AIR - 172-5342

MT835 & MT845

ITEM	NUMBER	QTY	DESCRIPTION
-	172-5342	--	LINES GP-AIR [A] (NOT SERVICED)
1	CH6R-3185	1	REDUCER
2	CH6T-6158	1	ELBOW
3	400127X1	16	CLAMP
4	CH135-6260	1	CLAMP
5	CH135-6261	3	CLAMP
6	205-2134	1	TUBE-INLET
7	205-2135	1	TUBE-OUTLET
8	219-8631	1	TUBE ASM-INLET
	CH4J-5050	1	BOSS
9	219-8629	2	HOSE-HUMP
10	219-8630	2	HOSE-HUMP
11	400376X1	1	SEAL-O-RING
12	CH9S-4181	1	PLUG

[A] PART OF 172-5361;172-5362;187-1741;
187-1742 INSTALLATION AR-ENGINE

0887727A
PR: t05i29k58b0054

LINES GP-AIR - 172-5341
MT855 & MT865

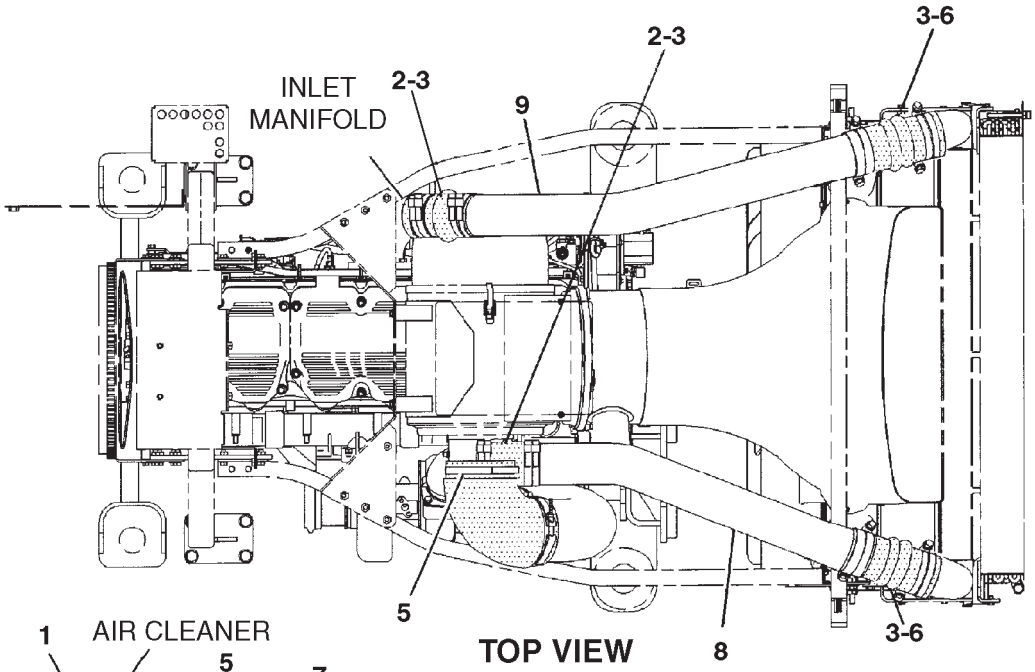

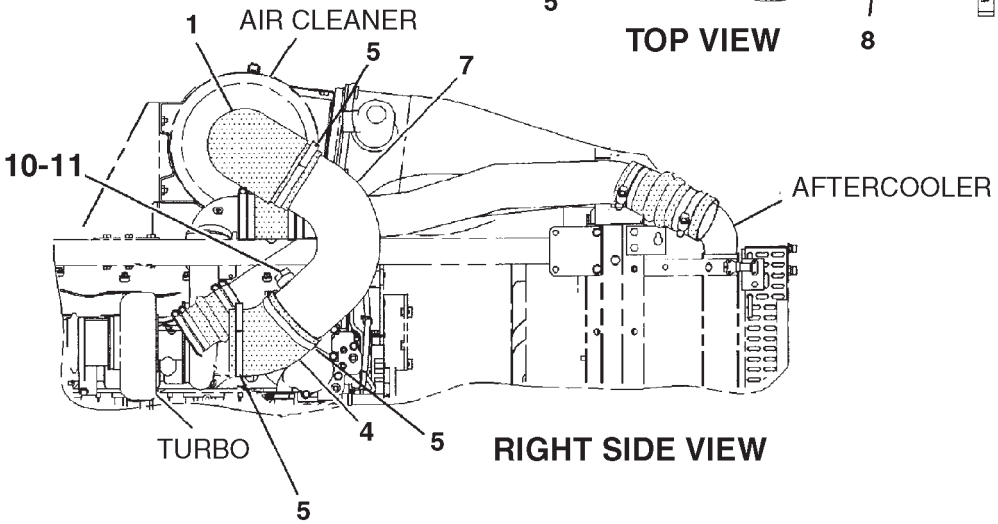

0882882A

LINES GP-AIR - 172-5341

MT855 & MT865

ITEM	NUMBER	QTY	DESCRIPTION
-	172-5341	--	LINES GP-AIR [A] (NOT SERVICED)
1	CH6T-6158	1	ELBOW
2	219-8630	2	HOSE-HUMP
3	400127X1	16	CLAMP-HOSE
4	CH9Y-6102	1	ELBOW
5	CH135-6261	4	CLAMP
6	219-8629	2	HOSE
7	219-8632	1	TUBE ASM-INLET(INCLUDES BOSS & TUBE)
	CH4J-5050		BOSS
8	205-2132	1	TUBE-OUTLET
9	205-2133	1	TUBE-INLET
10	400376X1	1	SEAL-O-RING
11	CH9S-4181	1	PLUG

[A] PART OF 172-5363;172-5364;187-1743;
187-1744 INSTALLATION AR-ENGINE

0882882A
PR: t05i29k58b0055

LINES GP-EJECTOR - 212-4444
MT835 & MT845

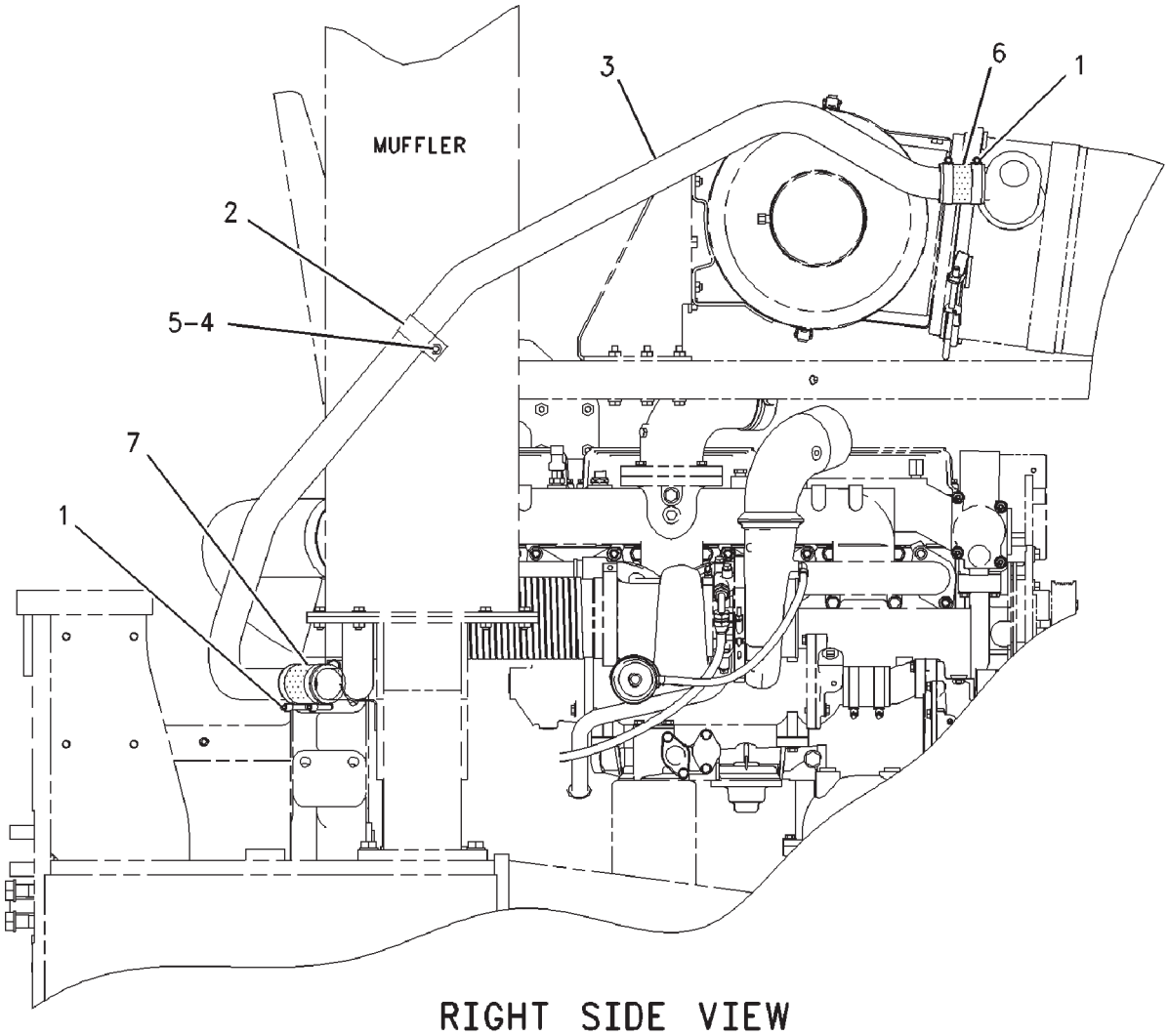

00888277

LINES GP-EJECTOR - 212-4444

MT835 & MT845

ITEM	NUMBER	QTY	DESCRIPTION
-	212-4444	--	LINES GP-EJECTOR [A] (NOT SERVICED)
1	400126X1	4	CLAMP-HOSE
2	CH105-1866	1	CLIP
3	212-4445	1	TUBE
4	400287X1	1	WASHER-HARD (11X21X2.5)
5	WR522218	2	NUT (M10X1.5)
6	CH5P-1259	--	HOSE (7.25CM)
7	CH5P-1259	--	HOSE (10.75CM)

[A] PART OF 172-5361; 172-5362
INSTALLATION AR-ENGINE

00888277
PR: t05i29k58b0056

LINES GP-EJECTOR - 197-4849

MT855 & MT865

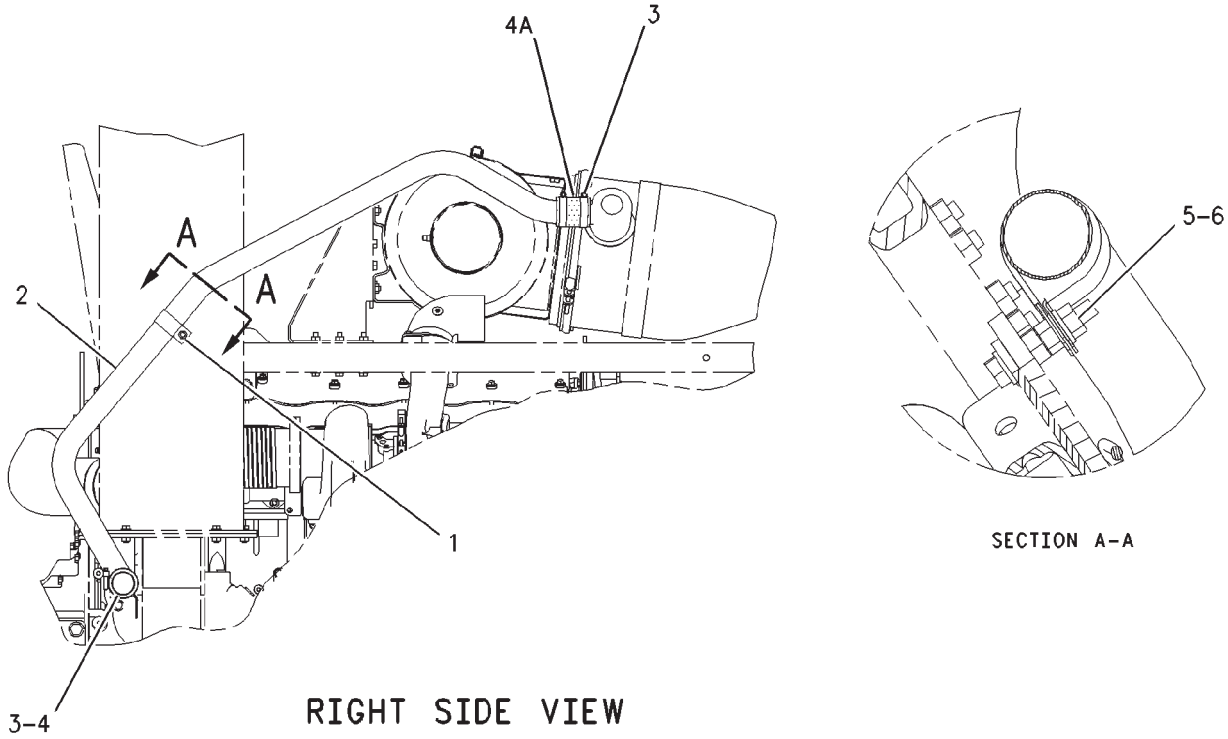

LINES GP-EJECTOR - 197-4849

MT855 & MT865

ITEM	NUMBER	QTY	DESCRIPTION
-	197-4849	--	LINES GP-EJECTOR [A] (NOT SERVICED)
1	CH105-1866	1	CLIP
2	197-4852	1	TUBE
3	400126X1	4	CLAMP-HOSE
4	CH5P-1259	--	HOSE (50.80ID X 10.7CM)
4A	CH5P-1259	--	HOSE (50.80ID X 7.2CM)
5	WR522218	2	NUT (M10X1.5)
6	400287X1	1	WASHER-HARD (11X21X2.5)

[A] PART OF: 172-5363;172-5364;187-1743;
187-1744 INSTALLATION AR-ENGINE

00868057
PR: t05i29k58b0057

MUFFLER GP - 172-5336
MT835 & MT845

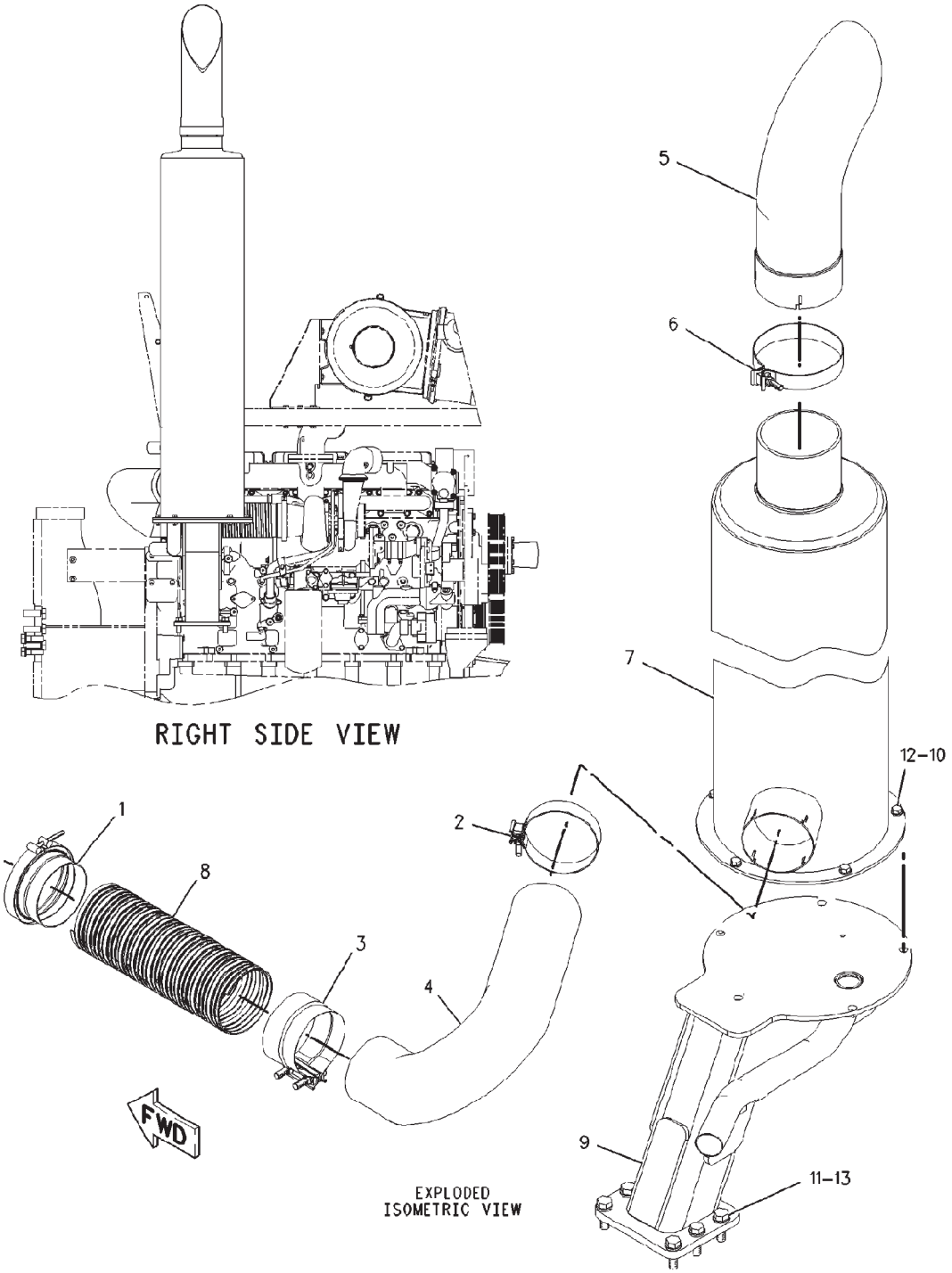

00899722

MUFFLER GP - 172-5336

MT835 & MT845

ITEM	NUMBER	QTY	DESCRIPTION
-	172-5336	--	MUFFLER GP [A] (NOT SERVICED)
1	CH9N-1941	1	CLAMP-V-BAND
2	CH202-2373	1	CLAMP
3	CH205-5366	1	CLAMP
4	209-0094	1	TUBE ASM
5	209-0512	1	EXTENSION
6	CH209-0620	1	CLAMP
7	209-0801	1	MUFFLER
8	210-1996	1	TUBE-FLEXIBLE
9	212-3281	1	SUPPORT ASM-EXHAUST (MT835 & MT845)
10	400287X1	5	WASHER-HARD (11X21X2.5)
11	400056X1	6	BOLT (M16X2X50MM)
12	400058X1	5	BOLT (M10X1.5X30MM)
13	400082X1	6	WASHER (17.5X30X3.5)
14	CH211-8713		SEALANT (NOT SHOWN)

[A] PART OF 172-5361;172-5362;187-1741;
187-1742 INSTALLATION AR-ENGINE

00899722
PR: t05i29k58b0058

MUFFLER GP - 172-5335
MT855 & MT865

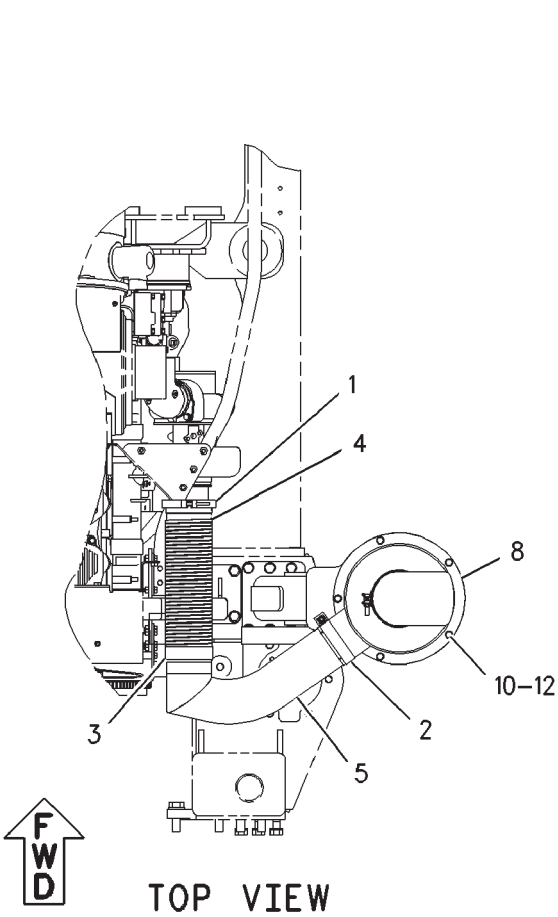

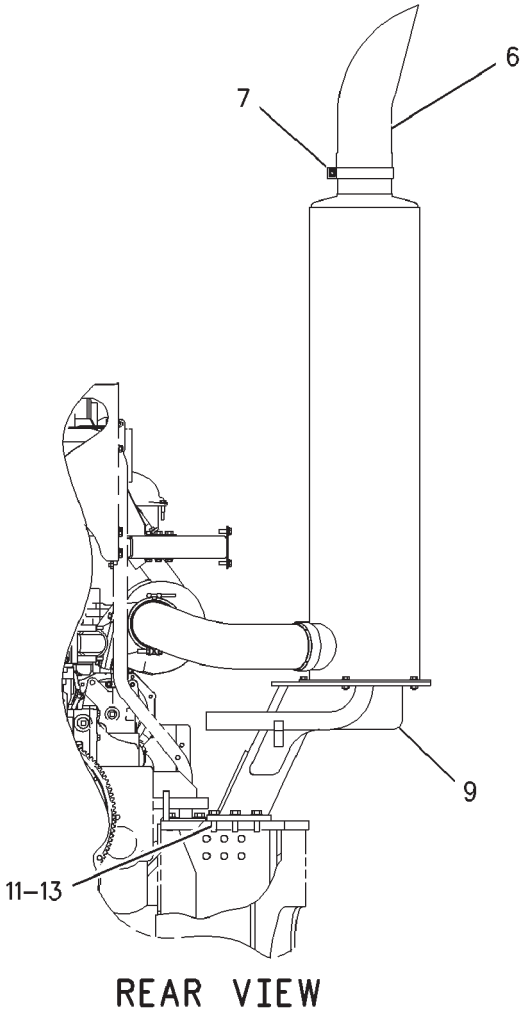

00868168

MUFFLER GP - 172-5335

MT855 & MT865

ITEM	NUMBER	QTY	DESCRIPTION
-	172-5335	--	MUFFLER GP [A] (NOT SERVICED)
1	CH9N-1941	1	CLAMP-V-BAND
2	CH202-2373	1	CLAMP
3	CH205-5366	1	CLAMP
4	205-5367	1	TUBE-FLEXIBLE
5	209-0095	1	TUBE-EXHAUST
6	209-0512	1	EXTENSION
7	CH209-0620	1	CLAMP
8	209-0802	1	MUFFLER
9	212-4300	1	SUPPORT ASM (INCLUDES SUPPORT & TUBE) (FOR MT855 AND MT865)
10	400287X1	5	WASHER-HARD (11X21X2.5)
11	400056X1	6	BOLT (M16X2X50MM)
12	400058X1	5	BOLT (M10X1.5X30MM)
13	400082X1	6	WASHER (17.5X30X3.5)
14	CH211-8713		SEALANT (NOT SHOWN)

[A] PART OF 172-5363;172-5364;187-1743
187-1744 INSTALLATION AR-ENGINE

00868168
PR: t05i29k58b0059

CONTROL GP-DECELERATOR - 152-0447

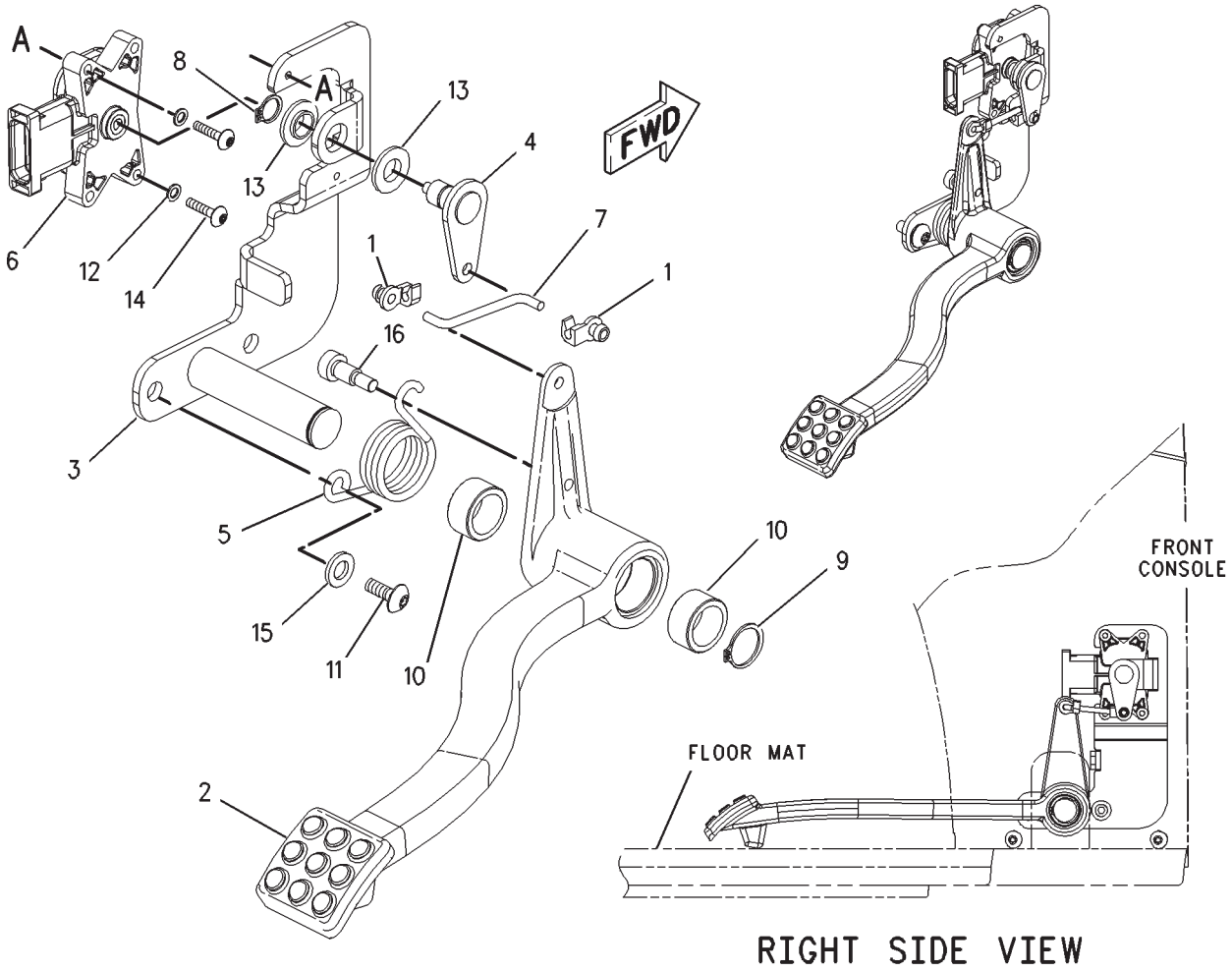

00850574

CONTROL GP-DECELERATOR - 152-0447

ITEM	NUMBER	QTY	DESCRIPTION
-	152-0447	--	CONTROL GP-DECELERATOR [A] (NOT SERVICED)
1	CH116-5728	2	CLIP-ROD END
2	136-5218	1	PEDAL-DECELERATOR
3	136-5221	1	BRACKET ASM (INCLUDES BRACKET & SHAFT)
4	136-5224	1	ARM ASM (INCLUDES SHAFT & PLATE)
5	CH214-9441	1	SPRING
6	500317D1	1	SENSOR POSITION
7	136-5566	1	LINK
8	CH095-0915	1	RING-RETAINING
9	CH2J-6356	1	RING-RETAINING
10	CH4E-1251	2	BEARING-SLEEVE
11	CH127-2170	2	SCREW-TRUSS HEAD (M8X1.25X20MM)
12	CH8C-9660	2	WASHER (4.6X7.9X0.8)
13	CH177-0378	2	BUSHING
14	CH9X-1046	2	SCREW (M4X0.7X18MM)
15	CH9M-1974	2	WASHER-HARD (8.8X16X2)
16	400004X1	1	BOLT-SHOULDER (M6X1X23.25MM)

[A] PART OF 500841D1;500842D1;500844D1;
500849D1 CAB AR

00850574
PR: t05i29k58b0060

CONTROL GP-GOVERNOR - 207-2031

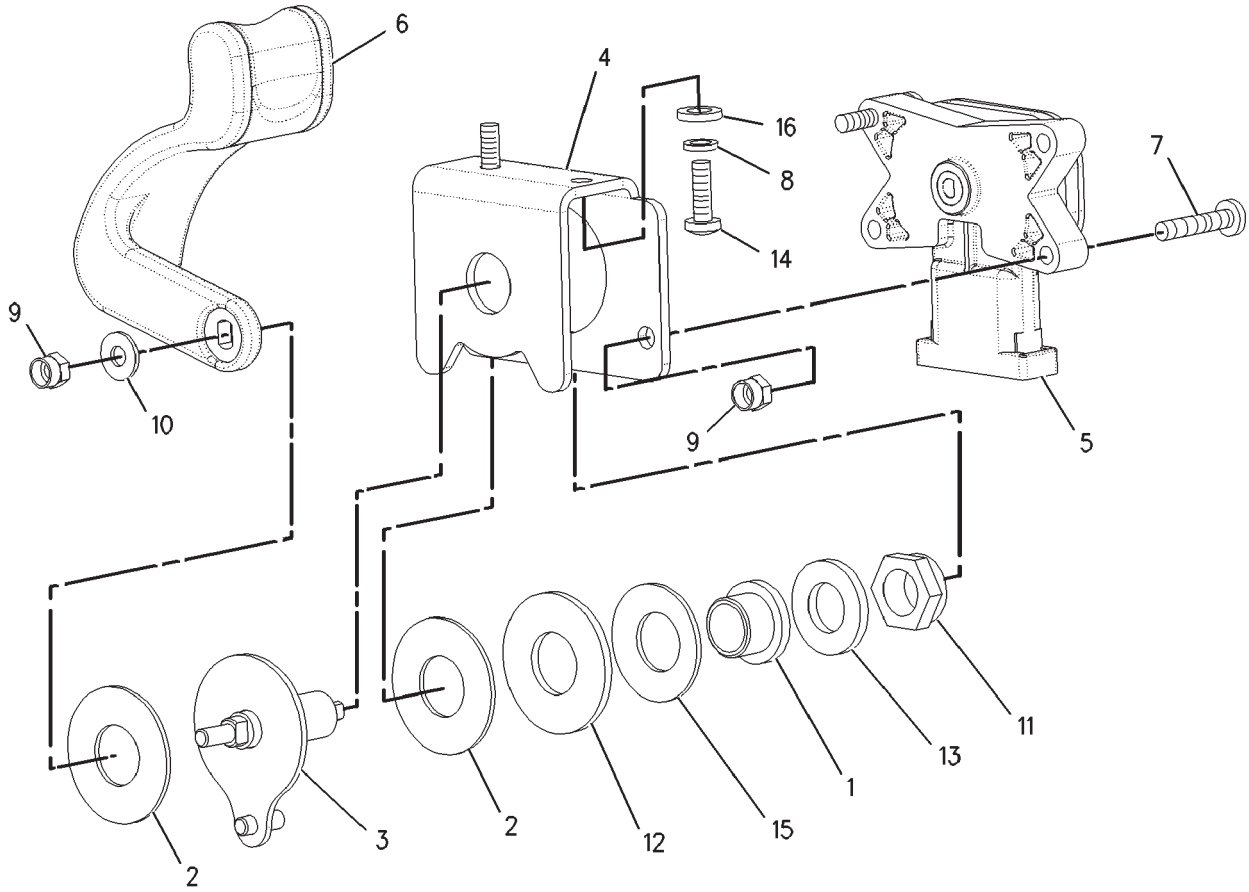

00867630

CONTROL GP-GOVERNOR - 207-2031

ITEM	NUMBER	QTY	DESCRIPTION
-	207-2031	--	CONTROL GP-GOVERNOR [A] (NOT SERVICED)
1	CH174-5747	1	BUSHING
2	400334X1	2	WASHER (16.5X37X1.5)
3	192-4776	1	SHAFT ASM(INCLUDES PIN, PLATE & SHAFT)
4	192-4777	1	BRACKET
5	500317D1	1	SENSOR-POSITION (SENSOR A)
6	CH207-2032	1	HANDLE
7	400072X1	2	BOLT-HX SCKT HD (M5X0.8X25MM)
8	CH3B-4503	2	LOCKWASHER
9	CH179-4324	3	LOCKNUT-NYLON INSRT (M5X.8)
10	CH4B-4274	1	WASHER (5.5X13X1.2)
11	CH4K-8341	1	LOCKNUT (1/2-20)
12	CH7X-0517	1	WASHER-HARD (17X38X2.5)
13	400357X1	1	WASHER-HARD (M12X25.5X3)
14	CH8T-6693	2	SCREW-MACHINE (M5X0.8X16MM)
15	400074X1	1	WASHER-BELLVILLE
16	400310X1	2	WASHER (6.6X12X2)

[A] PART OF 152-0434 CONSOLE
GP-OPERATOR

00867630
PR: t05i29k58b0061

FILTER GP-WATER SEP & FUEL - 198-0188
MT835 & MT845

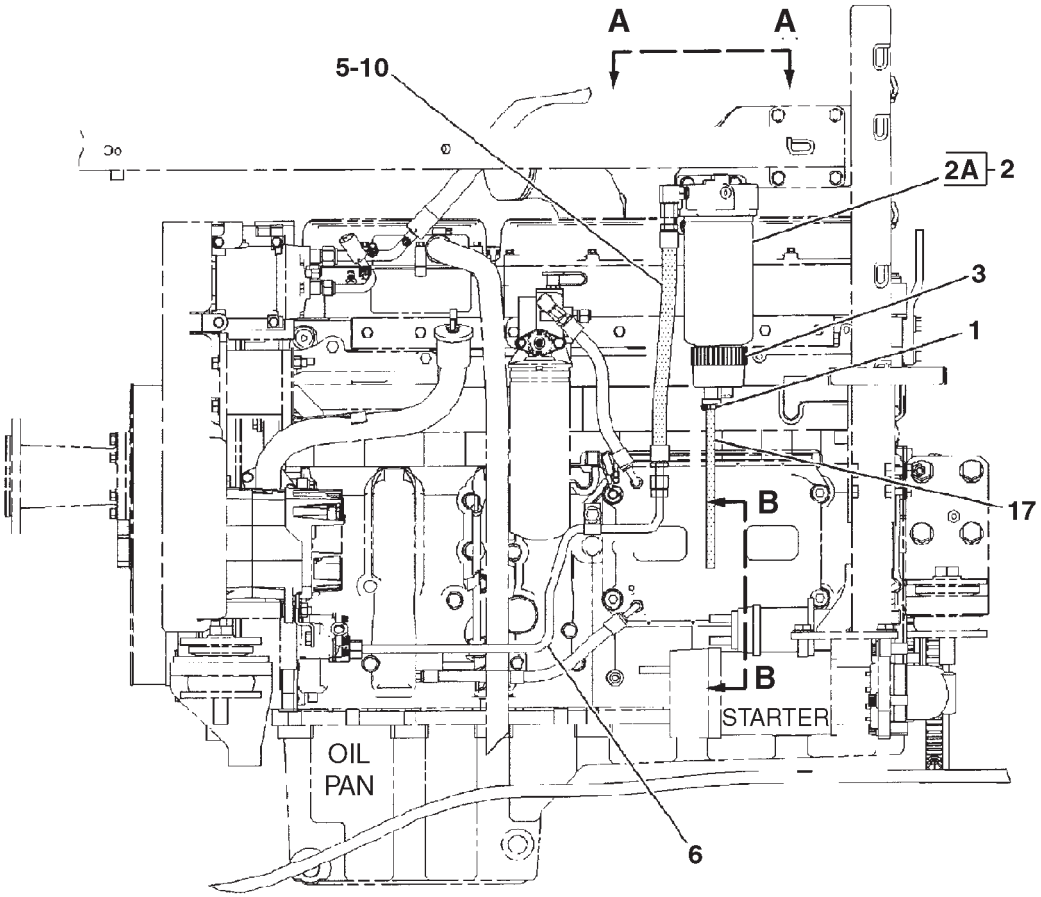

LEFT SIDE VIEW

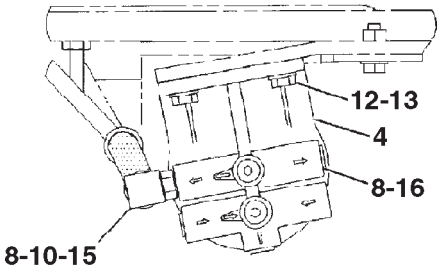

VIEW A-A

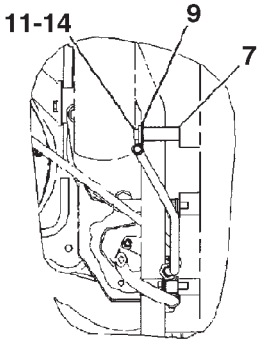

VIEW B-B

FILTER GP-WATER SEP & FUEL - 198-0188

MT835 & MT845

ITEM	NUMBER	QTY	DESCRIPTION
-	198-0188	--	FILTER GP-WATER SEP & FUEL [A] (NOT SERVICED)
1	CH1P-4278	1	CLAMP-HOSE
2	CH1R-0771	1	FILTER ASM-FUEL (INCLS 2A)
2A	CH220-8678	1	SEAL
3	CH173-7126	1	BOWL
4	CH177-9778	1	BASE ASM (INCLUDES STUD)
	CH9S-4167	1	STUD-HOLLOW
5	CH208-4830	1	HOSE ASM
6	210-7423	1	TUBE ASM
7	213-2589	1	SPACER
8	400318X1	6	SEAL-O-RING (11.89IDX1.98DIA)
9	CH5K-3294	1	CLIP
10	CH6V-8398	2	SEAL-O-RING (16.03ODX1.78DIA)
11	CH8M-4791	1	WASHER-HARD
12	400287X1	3	WASHER-HARD (11X21X2.5)
13	400059X1	3	BOLT (M10X1.5X35MM)
14	400241X1	1	BOLT (M12X1.75X80MM)
15	400418X1	1	ELBOW-90DEG -6STOR -8ORFS
16	CH9S-8004	5	PLUG
17	CH5P-6442	AR	HOSE (26CM)

[A] PART OF 172-5361; 172-5362
INSTALLATION AR-ENGINE

0888323A
PR: t05i29k58b0062

FILTER GP-WATER SEP & FUEL - 198-0187
MT855 & MT865

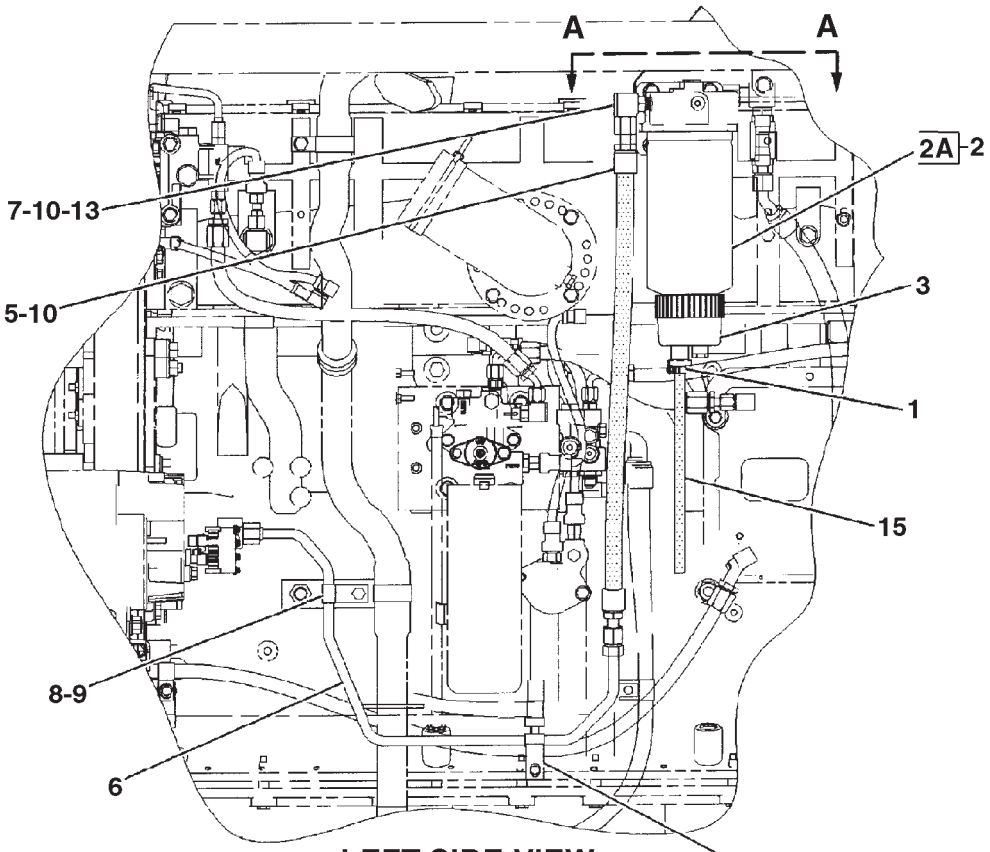

LEFT SIDE VIEW

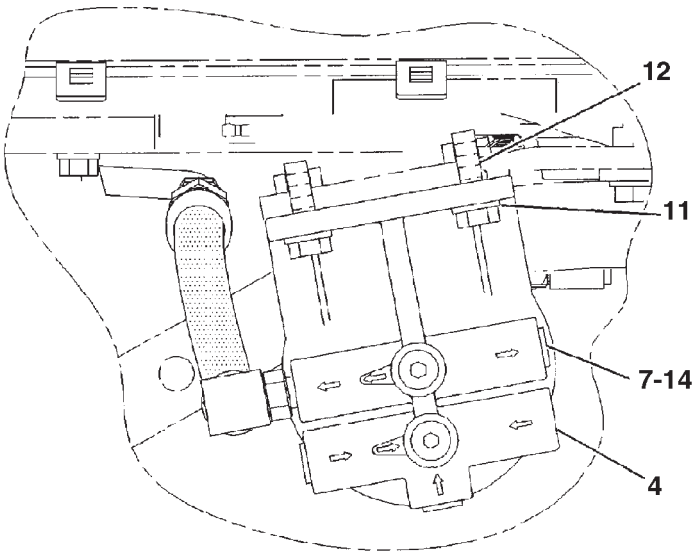

VIEW A-A

0898139A

FILTER GP-WATER SEP & FUEL - 198-0187

MT855 & MT865

ITEM	NUMBER	QTY	DESCRIPTION
-	198-0187	--	FILTER GP-WATER SEP & FUEL [A]
			(NOT SERVICED)
1	CH1P-4278	1	CLAMP-HOSE
2	CH1R-0771	1	FILTER ASM-FUEL
			FOR SEAL REPLACEMENT ORDER 2A)
2A	CH220-8678	1	SEAL
3	CH173-7126	1	BOWL
4	177-9778	1	BASE ASM (INCLUDES STUD)
	9S-4167	1	STUD
5	CH208-5384	1	HOSE ASM
6	221-1776	1	TUBE ASM
7	400318X1	6	SEAL-O-RING
8	CH4D-9517	1	CLIP
9	WR561071	1	BOLT (3/8-16X3)
10	CH6V-8398	2	SEAL-O-RING
11	400287X1	4	WASHER-HARD (11X21X2.5)
12	400059X1	3	BOLT (M10X1.5X35MM)
13	400018X1	1	ELBOW
14	CH9S-8004	5	PLUG
15	CH5P-6442	1	HOSE (26CM)

[A] PART OF 172-5363;172-5364;187-1743;
187-1744 INSTALLATION AR-ENGINE

0898139A
PR: t05i29k58b0063

LINES GP-FUEL - 213-9315
MT835 & MT845

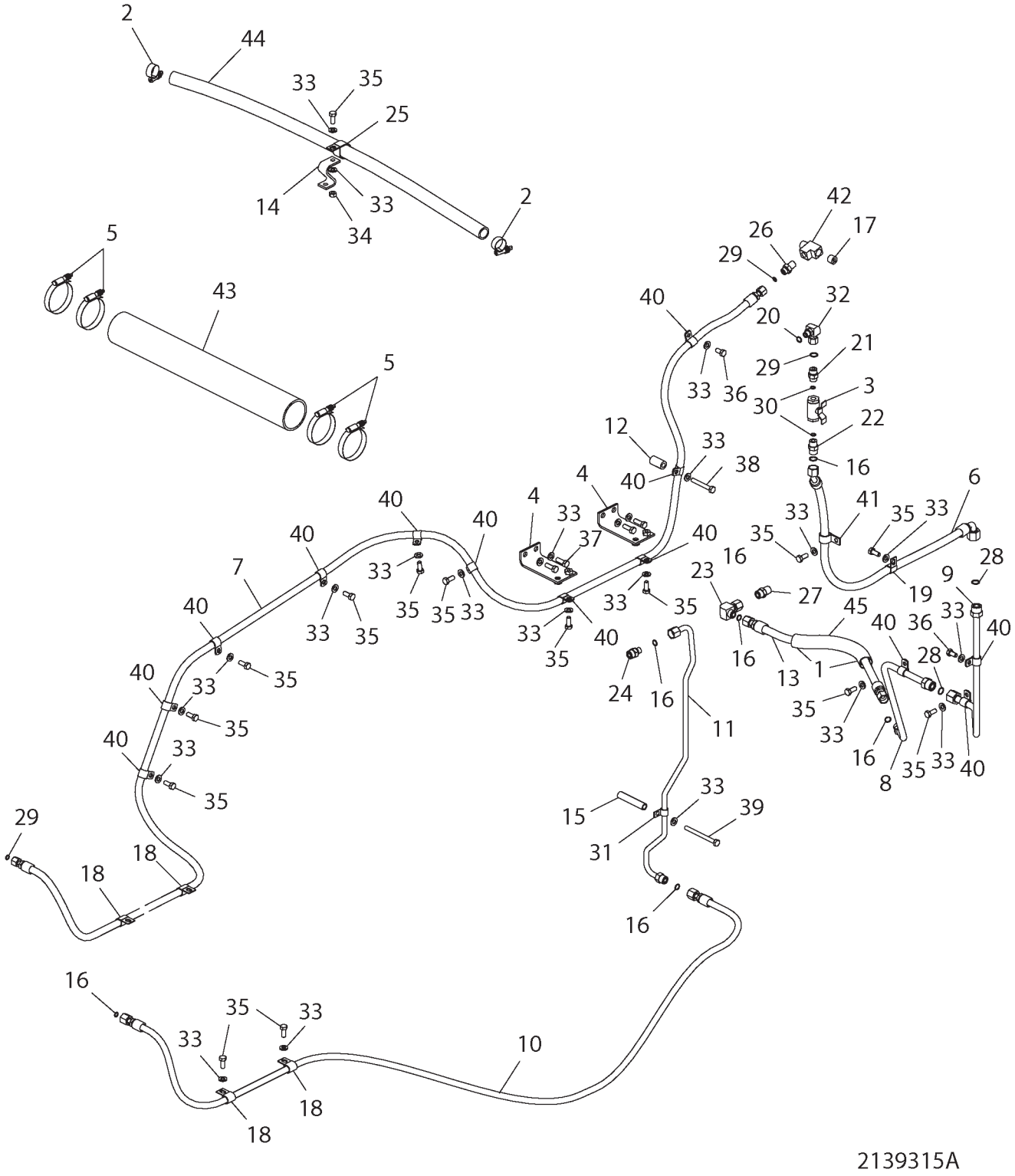

LINES GP-FUEL - 213-9315

MT835 & MT845

ITEM	NUMBER	QTY	DESCRIPTION
	213-9315		LINES GP-FUEL [A] (NOT SERVICED)
1	CH7K-1181	2	STRAP-CABLE 0.19-4.00
2	CH7X-7958	2	CLAMP-25-44IDX16 CONST TENSION
3	CH206-0325	1	VALVE-3/4-16 THD
4	209-0141	2	BRACKET AS
5	CH8T-4985	4	CLAMP-HOSE 83-105ID CONST LOAD
6	212-3811	1	HOSE AS-12.7 ID CMS 5774
7	212-3813	1	HOSE AS-9.5 ID CMS 5774
8	212-3814	1	TUBE AS.
9	212-3815	1	TUBE AS.
10	214-0041	1	HOSE AS-9.52 ID CMS 5774
11	214-0042	1	TUBE AS.
12	CH215-6489	1	SPACER-12 IDX22 ODX40 ZN
13	217-5924	1	HOSE AS-12.7 ID CMS 5574
14	220-8642	1	BRACKET
15	224-7075	1	SPACER
16	CH033-6033	7	SEAL-O-RING 12.4IDX1.78DIA
17	CH2B-0858	1	PLUG-8 NPTF 9.52SQR.CNTRSK
18	CH3S-8664	4	CLIP-LOOP 19.05 ID
19	CH6D-4246	1	CLIP-LOOP 19.05ID
20	CH6V-5049	2	SEAL-O RING 11.89IDX1.98 DIA
21	400627X1	1	CONNECTOR-STR-8STOR-6ORFS
22	CH6V-8639	1	CONNECTOR-STR-12.7 STR -8 ORFS
23	400686X1	1	ELBOW-90DEG 8 ORFS SWVL
24	400429X1	1	CONNECTOR-STR -6 STOR-8 ORFS
25	400689X1	1	CLIP LOOP 38.1ID
26	CH8C-6870	1	CONNECTOR-8 NPTF X 6 ORFS
27	CH8C-6872	1	CONNECTOR-8 NPTF X 8 ORFS
28	CH8L-2746	2	SEAL-O-RING 15.61IDX1.78DIA
29	CH8L-2779	3	SEAL-O-RING 9.25ID X 1.78DIA
30	CH8L-2786	2	SEAL-O RING 16.36IDX2.21 DIA
31	CH8M-2770	1	CLIP-LOOP 12.7 ID
32	CH8T-0788	1	ELBOW-90DEG 6STORX6 ORFS SWVL
33	400287X1	24	WASHER-HARD 11IDX21ODX2.5 ZND1
34	WR522218	1	NUT-M10-1.5,CL10.9,ZN,H,REG
35	400039X1	15	BOLT-M10X1.5X25 ZNDI HHD 10.9
36	400040X1	2	BOLT-M10X1.5X20 ZNDI HHD 10.9
37	400058X1	4	BOLT-M10X1.5X30 ZNDI HHD 10.9
38	400066X1	1	BOLT-M10X1.5X70 ZNDI HHD 10.9
39	400240X1	1	BOLT-M10X1.5X110 ZNDI HHD 10.9
40	400702X1	13	CLIP-ONE TUBE COATED
41	CH9X-8250	1	CLIP-LOOP 23.8 ID
42	500142D1	1	FITTING-TEE
43	500291D1	1	HOSE-TRANSFER
44	CH146-7453	AR	HOSE-BULK 25.4 ID HTEMP L PRES (116CM)
45	400691X1	AR	SLEEVE-ABRASION BULK 31.75ID (25CM)

[A] PART OF 172-5361;172-5362;187-1741;
187-1742 INSTALLATION AR

2139315A
PR: t05i29k58b0064

LINES GP-FUEL - 179-2183
MT855 & MT865

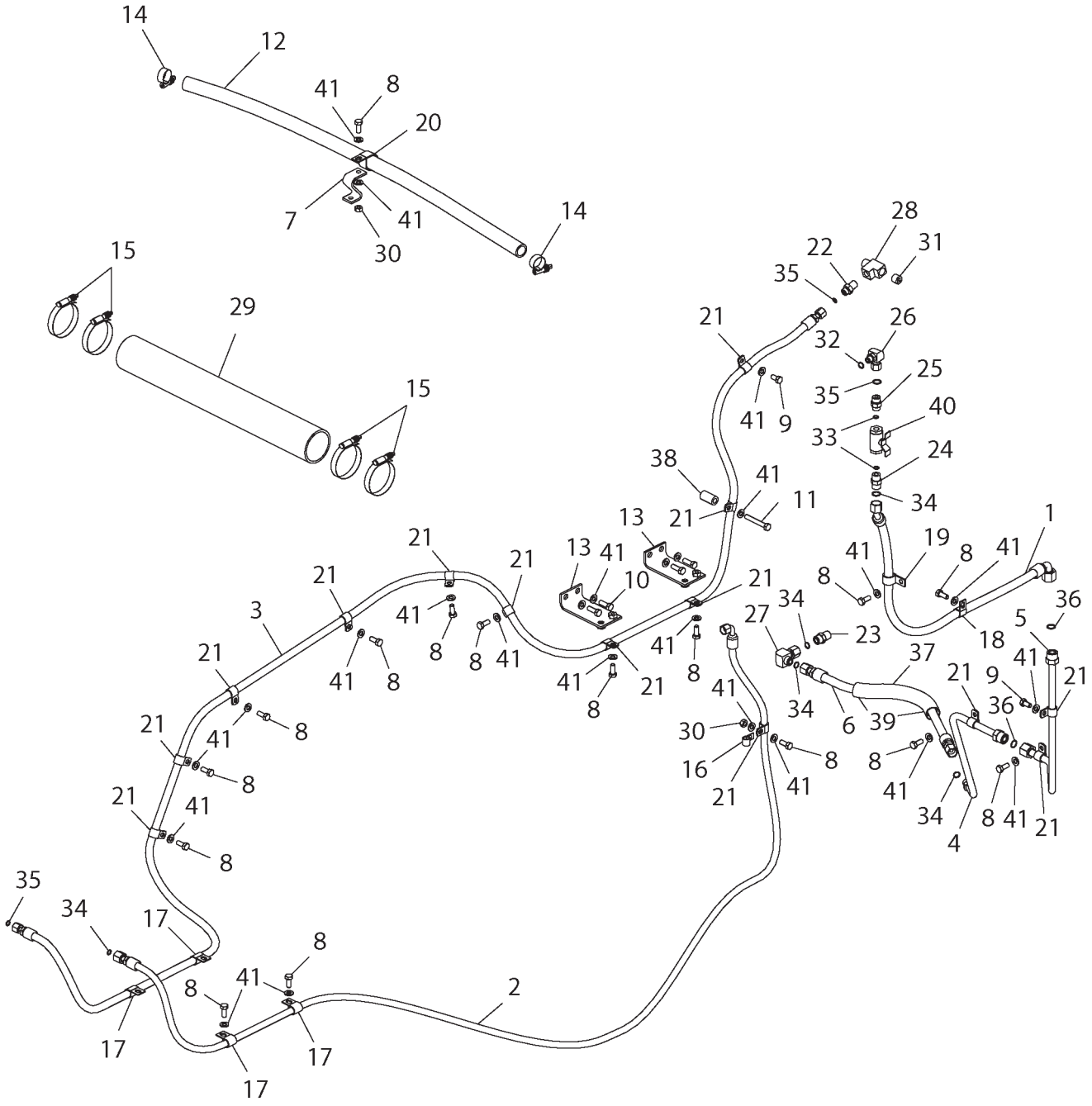

LINES GP-FUEL - 179-2183

MT855 & MT865

ITEM	NUMBER	QTY	DESCRIPTION
-	179-2183	--	LINES GP-FUEL [A] (NOT SERVICED)
1	212-3811	1	HOSE AS-12.7 ID CMS 5774
2	CH212-3812	1	HOSE AS 9.5 ID CMS 5774
3	212-3813	1	HOSE AS-9.5 ID CMS 5774
4	212-3814	1	TUBE AS.
5	212-3815	1	TUBE AS.
6	217-5924	1	HOSE AS-12.7 ID CMS 5574
7	220-8642	1	BRACKET
8	400039X1	16	BOLT-M10X1.5X25 ZNDI HHD 10.9
9	400040X1	16	BOLT-M10X1.5X20 ZNDI HHD 10.9
10	400058X1	16	BOLT-M10X1.5X30 ZNDI HHD 10.9
11	400066X1	16	BOLT-M10X1.5X70 ZNDI HHD 10.9
12	CH146-7453	116	HOSE-BULK 25.4 ID HTEMP L PRES (116CM)
13	209-0141	2	BRACKET AS
14	CH7X-7958	2	CLAMP-25-44IDX16 CONST TENSION
15	CH8T-4985	4	CLAMP-HOSE 83-105ID CONST LOAD
16	CH8M-2770	1	CLIP-LOOP 12.7 ID
17	CH3S-8664	4	CLIP-LOOP 19.05 ID
18	CH6D-4246	1	CLIP-LOOP 19.05ID
19	CH9X-8250	1	CLIP-LOOP 23.8 ID
20	400689X1	1	CLIP LOOP 38.1ID
21	400702X1	14	CLIP-ONE TUBE COATED
22	CH8C-6870	1	CONNECTOR-8 NPTF X 6 ORFS
23	CH8C-6872	1	CONNECTOR-8 NPTF X 8 ORFS
24	CH6V-8639	1	CONNECTOR-STR-12.7 STR -8 ORFS
25	400627X1	1	CONNECTOR-STR-8STOR-6ORFS
26	CH8T-0788	1	ELBOW-90DEG 6STORX6 ORFS SWVL
27	400686X1	1	ELBOW-90DEG 8 ORFS SWVL
28	500142D1	1	FITTING-TEE
29	500291D1	1	HOSE-TRANSFER
30	WR522218	2	NUT-M10-1.5,CL10.9,ZN,H,REG
31	CH2B-0858	1	PLUG-8 NPTF 9.52SQR.CNTRSK
32	CH6V-5049	1	SEAL-O RING 11.89IDX1.98 DIA
33	CH8L-2786	2	SEAL-O RING 16.36IDX2.21 DIA
34	CH033-6033	5	SEAL-O-RING 12.4IDX1.78DIA
35	CH8L-2779	3	SEAL-O-RING 9.25ID X 1.78DIA
36	CH8L-2746	2	SEAL-O-RING 15.61IDX1.78DIA
37	400691X1	25	SLEEVE-ABRASION BULK 31.75ID (25CM)
38	CH215-6489	1	SPACER-12 IDX22 ODX40 ZN
39	CH7K-1181	2	STRAP-CABLE 0.19-4.00
40	CH206-0325	1	VALVE-3/4-16 THD
41	400287X1	25	WASHER-HARD 11IDX21ODX2.5 ZND1

[A] PART OF 172-5363;172-5364;187-1743;
187-1744 INSTALLATION AR-ENGINE

1792183A
PR: t05i29k58b0065

LINES GP-FUEL - 197-1317

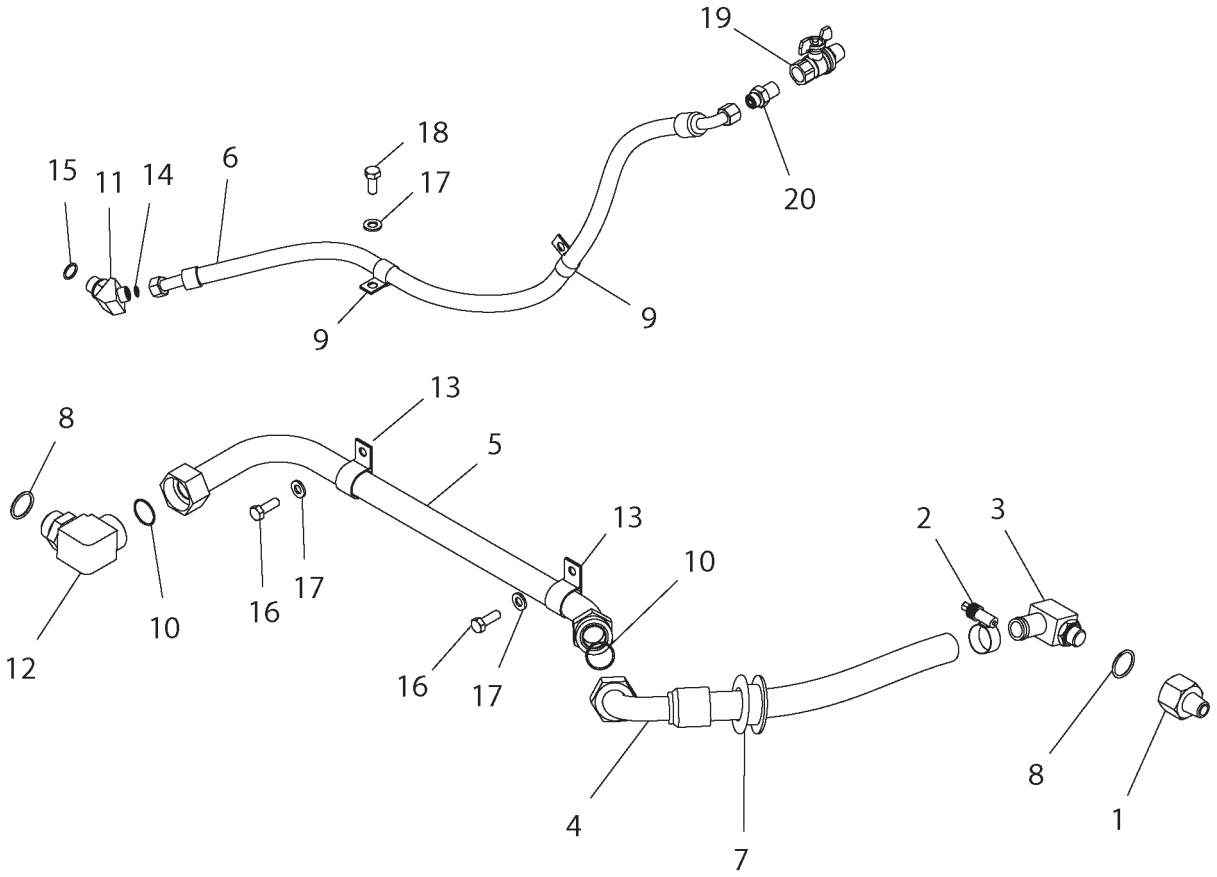

1971317A

LINES GP-FUEL - 197-1317

ITEM	NUMBER	QTY	DESCRIPTION
-	197-1317	--	LINES GP-FUEL [A]
1	CH8C-5053	1	ADAPTER
2	CH7X-7958	1	CLAMP-HOSE
3	CH034-4202	1	ELBOW
4	197-7948	1	HOSE
5	200-1300	1	TUBE ASM
6	192-6386	1	HOSE
7	CH4I-5399	1	GROMMET
8	CH5P-7701	2	SEAL-O-RING
9	CH6D-4246	2	CLIP
10	400365X1	2	SEAL-O-RING
11	CH6V-9876	1	ELBOW
12	400583X1	1	ELBOW
13	400598X1	2	CLIP
14	CH8L-2779	2	SEAL-O-RING
15	CH8L-2786	1	SEAL-O-RING
16	400058X1	2	BOLT (M10X1.5X30MM)
17	400287X1	3	WASHER-HARD (11X21X2.5)
18	400039X1	1	BOLT (M10X1.5X25MM)
19	CH221-2002	1	VALVE-BALL (8NPTF)
20	CH8C-6870	1	CONNECTOR (6ORFSX8NPT)

[A] PART OF 197-8558 TANK AR-FUEL

1971317A
PR: t05i29k58b0066

TANK & MTG GP-FUEL - 179-2182

NO ILLUSTRATION

NOTIF1

TANK & MTG GP-FUEL - 179-2182

ITEM	NUMBER	QTY	DESCRIPTION
-	179-2182	--	TANK & MTG GP-FUEL [A] (NOT SERVICED)
1	186-5431	1	SUPPORT GP-FUEL TANK (NOT SERVICED) (SEE BREAKDOWN FOR COMPONENTS)
2	186-5432	1	TANK GP-FUEL (NOT SERVICED) (SEE BREAKDOWN FOR COMPONENTS)

[A] PART OF 179-1953 CHASSIS AR

NOTIF1
PR: t05i29k58b0067

TANK AR-FUEL - 197-8558
AUXILIARY 94.8 LITERS (25 GALLONS)

NO ILLUSTRATION

NOTIF2

TANK AR-FUEL - 197-8558
AUXILIARY 94.8 LITERS (25 GALLONS)

ITEM	NUMBER	QTY	DESCRIPTION
-	502771D1	--	TANK AR-3RD FUEL TANK (FACT OPT) (MT835,MT845,MT855) (NOT SERVICED)
-	502760D1	--	TANK AR-3RD FUEL TANK (FIELD INSTALLED) (INCLUDES 197-8558 & INSTRUCTIONS) (MT835,MT845,MT855)
-	197-8558	--	TANK AR-FUEL [A] (INCLS ITEMS 1 & 2)
1	197-1317	1	LINES GP-FUEL (NOT SERVICED) (SEE BREAKDOWN FOR COMPONENTS)
2	206-8891	1	TANK GP-FUEL (NOT SERVICED) (SEE BREAKDOWN FOR COMPONENTS)

[A] PART OF:
156-5584; 179-2196 BASE UNIT AR;
502760D1; 502771D1 TANK AR-FUEL

NOTIF2
PR: t05i29k58b0068

TANK GP-FUEL - 186-5432
1155 LITERS (305 GALLONS)

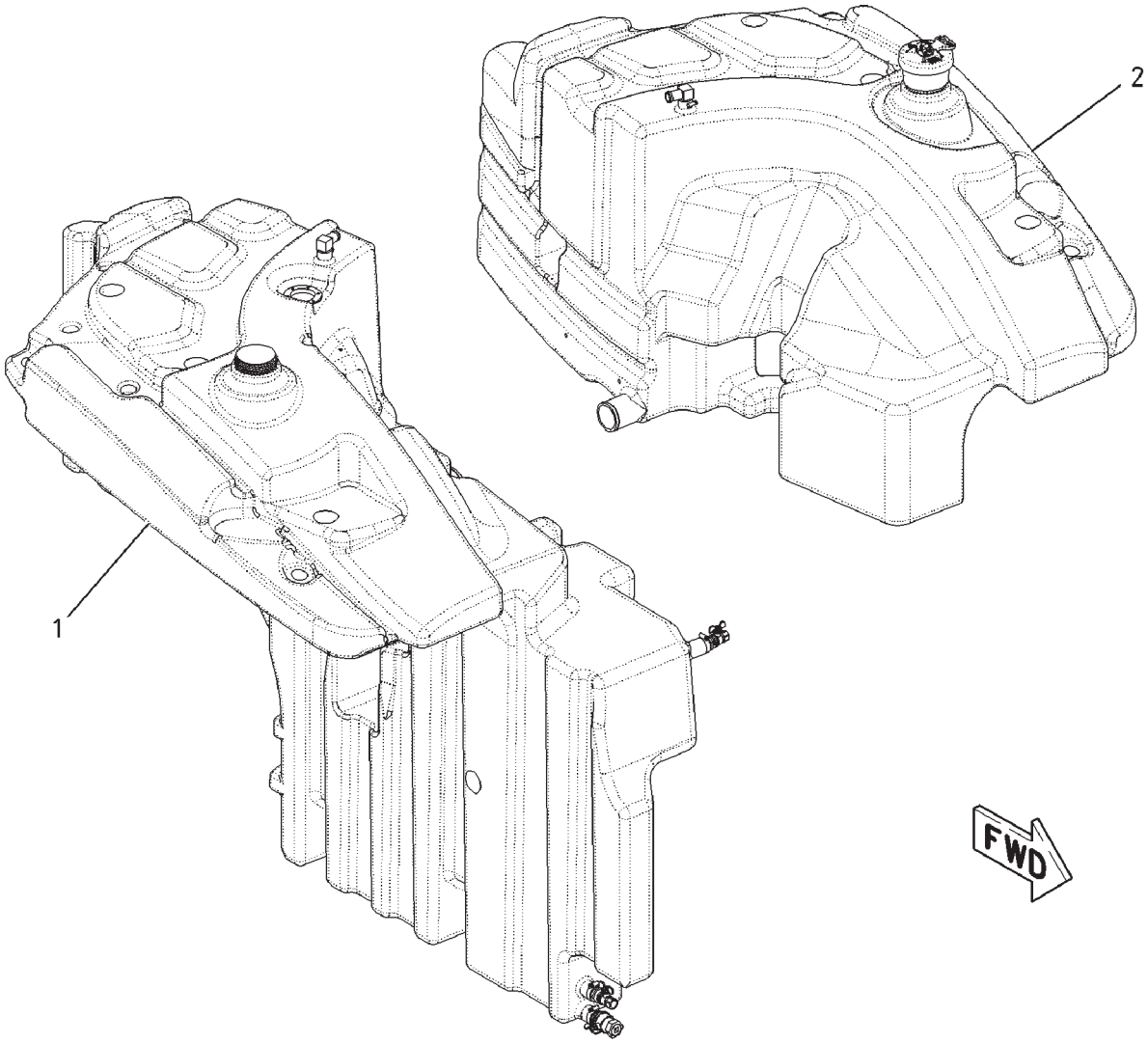

00886907

TANK GP-FUEL - 186-5432
1155 LITERS (305 GALLONS)

ITEM	NUMBER	QTY	DESCRIPTION
-	186-5432	--	TANK GP-FUEL [A] (NOT SERVICED)
1	196-7742	1	TANK GP-FUEL (RH) (NOT SERVICED) (SEE BREAKDOWN FOR COMPONENTS)
2	500016D1	1	TANK GP-FUEL (LH) (NOT SERVICED) (SEE BREAKDOWN FOR COMPONENTS)

[A] PART OF 179-2182 TANK & MTG GP-FUEL

00886907
PR: t05i29k58b0069

TANK GP-FUEL - 196-7742
RIGHT HAND

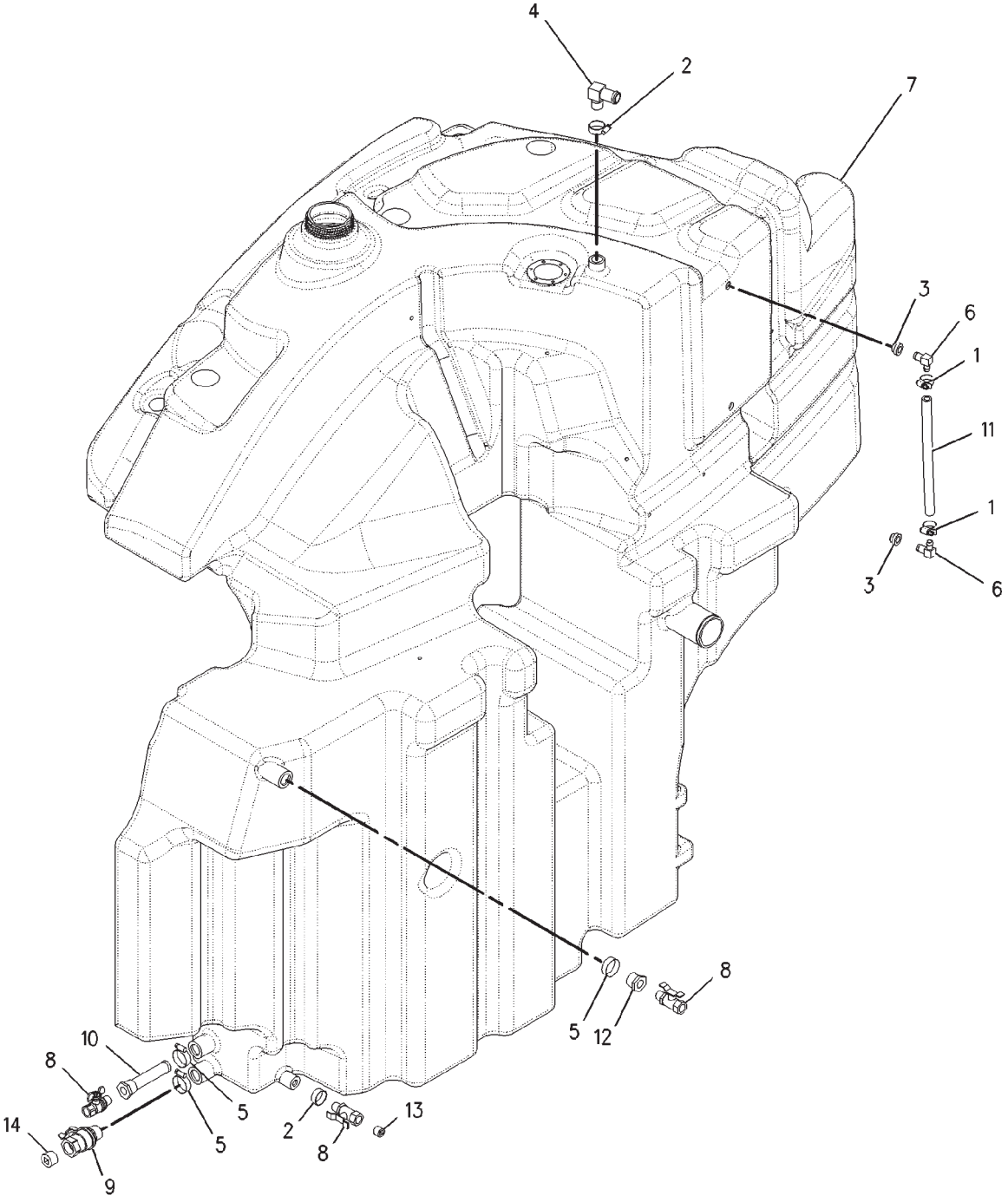

00888761

TANK GP-FUEL - 196-7742
RIGHT HAND

ITEM	NUMBER	QTY	DESCRIPTION
-	196-7742	--	TANK GP-FUEL [A] (NOT SERVICED)
1	CH1P-4278	2	CLAMP-HOSE
2	CH2S-3440	2	CLAMP-HOSE
3	CH6W-5698	2	GROMMET
4	CH7W-1890	1	ELBOW
5	CH9M-2904	3	CLAMP-HOSE
6	CH186-5862	2	ELBOW
7	188-0771	1	TANK-FUEL (RH)
8	CH221-2002	3	VALVE-BALL (FUEL SHUT-OFF)
9	CH221-2003	1	VALVE-BALL (FUEL SHUT-OFF)
10	CH221-3265	1	STRAINER (SUCTION)
11	200-2841	AR	HOSE-BULK-90CM (31CM REQ'D)
12	CH061-9593	1	BUSHING-REDUCER
13	CH2B-0858	1	PLUG-PIPE
14	CH3B-0551	1	PLUG-PIPE

[A] PART OF 186-5432 TANK GP-FUEL

00888761
PR: t05i29k58b0070

TANK GP-FUEL - 500016D1
LEFT HAND

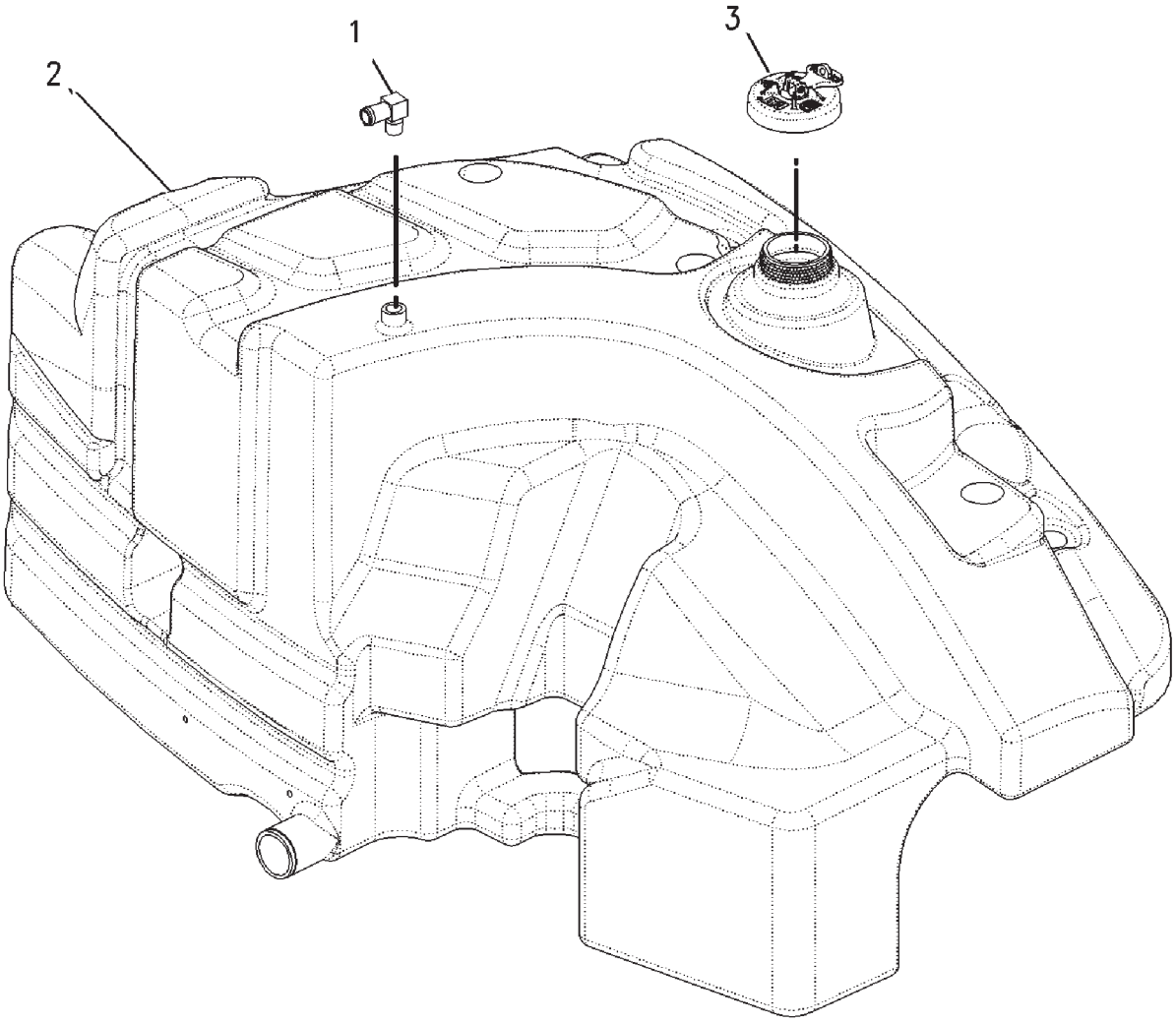

500016DB

TANK GP-FUEL - 500016D1
LEFT HAND

ITEM	NUMBER	QTY	DESCRIPTION
-	500016D1	--	TANK GP-FUEL [A] (NOT SERVICED)
1	CH7W-1890	1	ELBOW-90DEG (12NPTFX25.4ODBARB)
2	500017D1	1	TANK-FUEL (LH)
3	500019D1	1	FUEL CAP AS-2 WAY VENTING

[A] PART OF 186-5432 TANK GP-FUEL

500016DB
PR: t05i29k58b0071

TANK GP-FUEL - 206-8891
94.63 LITERS (25 GALLONS)

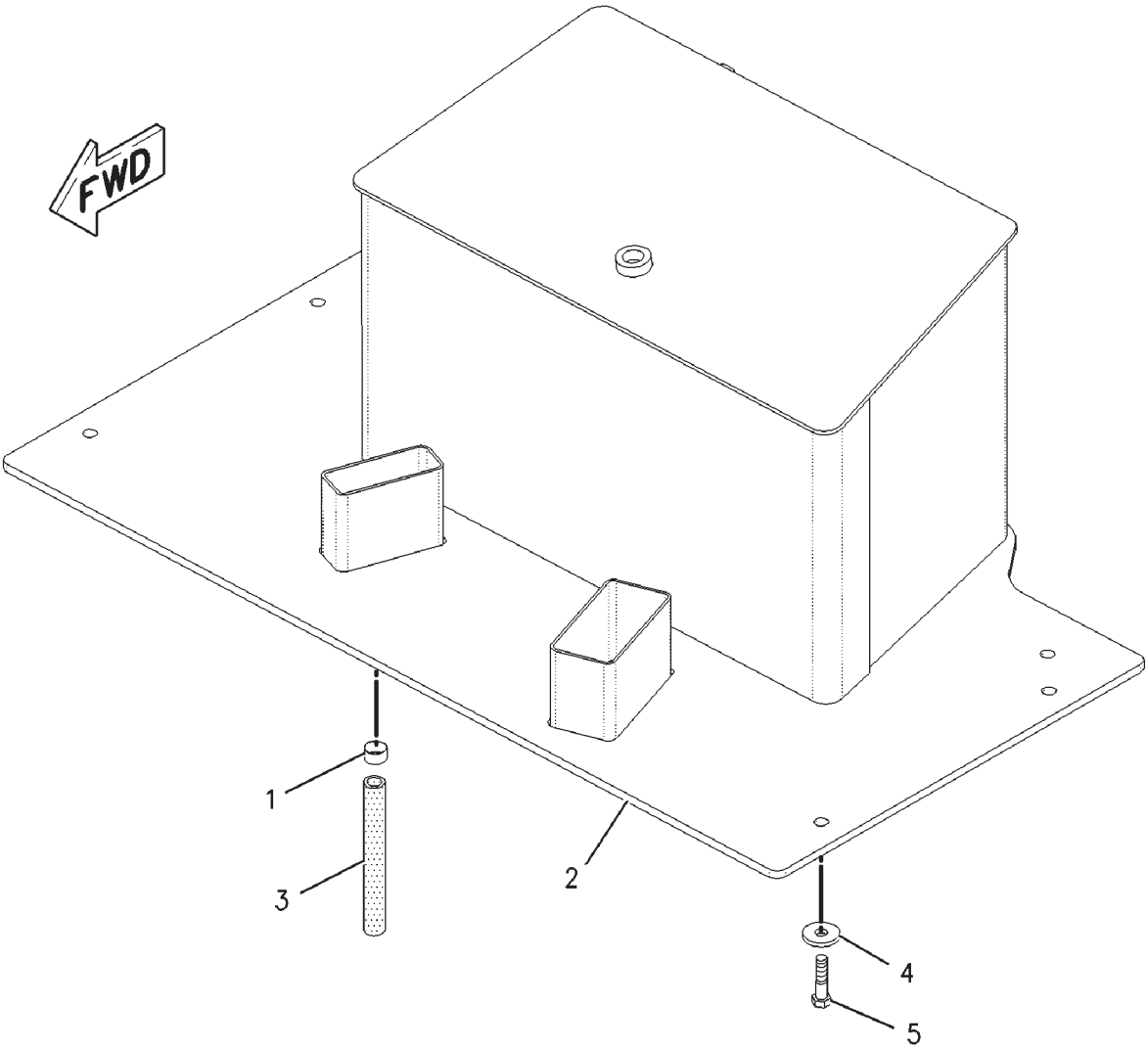

00891934

TANK GP-FUEL - 206-8891
94.63 LITERS (25 GALLONS)

ITEM	NUMBER	QTY	DESCRIPTION
-	206-8891	--	TANK GP-FUEL [A] (NOT SERVICED)
1	400108X1	1	CLAMP-HOSE
2	193-7868	1	TANK GP-FUEL
	CH9S-7583	1	PLUG (2 1/2-12)
	CH030-4606	1	SEAL-O-RING
3	CH210-2265		HOSE (19 CM)
4	CH7X-0618	6	WASHER-HARD (13.5X40X5)
5	400057X1	6	BOLT (M12X1.75X50MM)

[A] PART OF 197-8558 TANK AR-FUEL

00891934
PR: t05i29k58b0072

BATTERY & WIRING GP - 136-5658

3 BATTERIES WITHOUT DISCONNECT SWITCH
MT835 & MT845

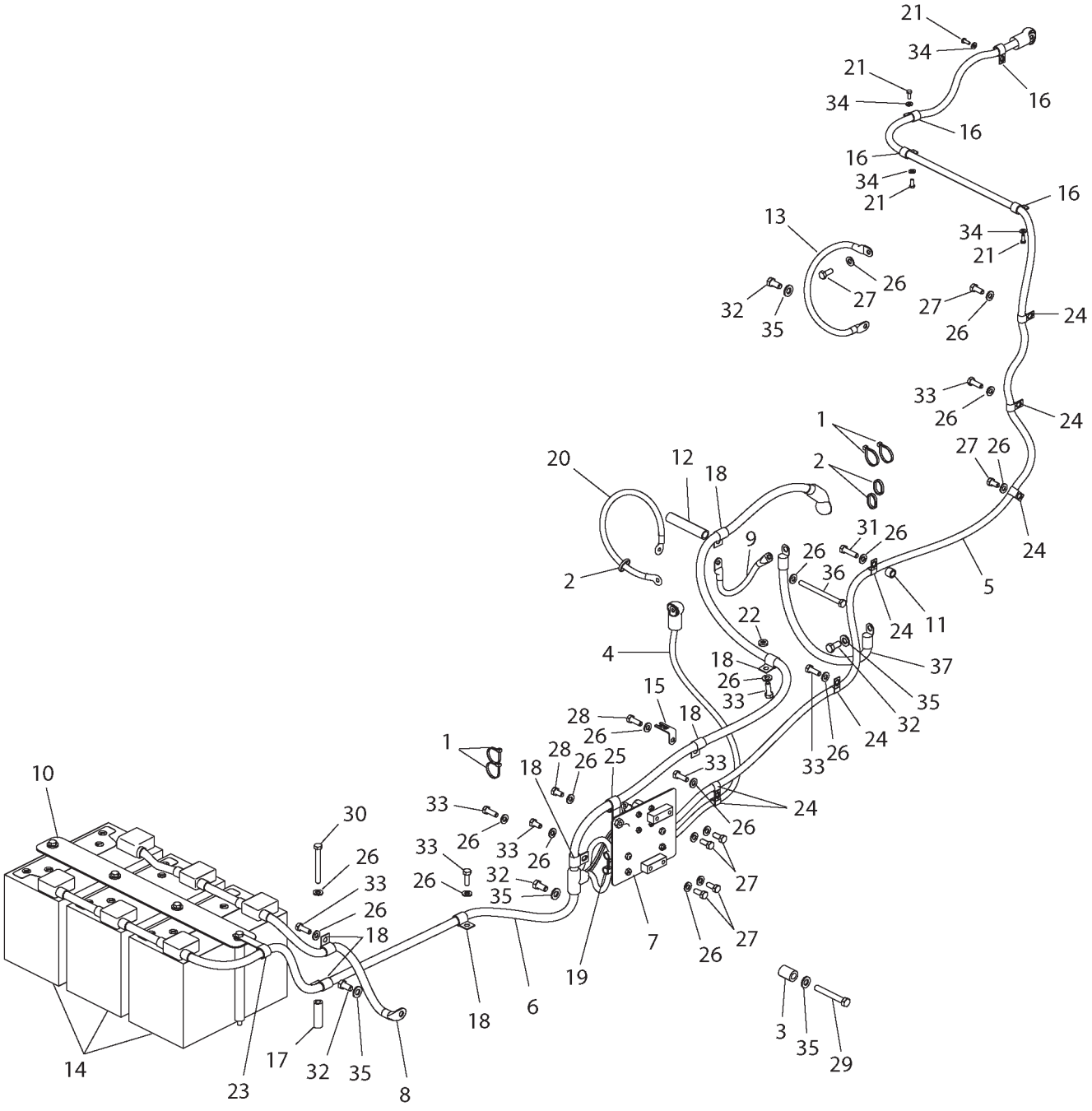

1365658A

BATTERY & WIRING GP - 136-5658

3 BATTERIES WITHOUT DISCONNECT SWITCH
MT835 & MT845

ITEM	NUMBER	QTY	DESCRIPTION
-	136-5658	--	BATTERY & WIRING GP (NOT SERVICED)
1	400837X1	6	STRAP-CABLE (44.45X4.93MM)
2	CH7K-1181	3	STRAP-CABLE (0.19-4.00)
3	CH8V-9708	1	SPACER (4.31IDX25.4ODX35MM
4	136-5225	1	CABLE ASM-BATTERY (POSITIVE)
5	136-5270	1	CABLE ASM-BATTERY (POSITIVE)
6	136-5612	1	CABLE ASM (POSITIVE)
7	136-5654	1	CIRCUIT BREAKER GP (NOT SERVICED) (SEE BREAKDOWN FOR COMPONENTS)
8	501114D1	1	CABLE ASM-4AWG (NEGATIVE)
9	142-9738	1	CABLE ASM (NEGATIVE)
10	142-9760	1	MOUNTING GP-BATTERY (NOT SERVICED) (SEE BREAKDOWN FOR COMPONENTS)
11	CH200-8649	1	SPACER
12	CH211-3590	1	SPACER
13	223-0687	1	CABLE-GROUND
14	502446D1	3	BATTERY-MAINT FREE (DRY)
	CH123-1373	6	PLUG ASM-FILLER
15	CH132-5789	1	CLIP-LADDER 90DEGX47.5MM V COAT
16	CH134-3988	4	CLIP
17	CH212-0279	1	SPACER
18	CH3S-8664	7	CLIP-LOOP (19.05ID)
19	CH4K-8864	4	CLIP-LOOP (14.29ID)
20	500627D1	1	CABLE ASM-NEG (ALT GND) (1060MM LG) (EARLY VERSION)
20	502183D1	1	CABLE ASM-NEG (ALT GND) (472.5MM LG) (LATER VERSION)
21	400152X1	4	BOLT (M6X1X16MM)
22	CH5J-4715	1	WASHER
23	400695X1	1	CLIP-LOOP (20.64ID)
24	CH8M-2770	8	CLIP
25	CH8S-0948	1	CLIP
26	400287X1	22	WASHER-HARD (11X21X2.5)
27	400039X1	6	BOLT (M10X1.5X25MM)
28	400040X1	5	BOLT (M10X1.5X20MM)
29	400046X1	1	BOLT (M12X1.75X90)
30	400225X1	1	BOLT (M10X1.5X90MM)
31	400052X1	1	BOLT (M10X1.5X40)
32	400055X1	4	BOLT (M12X1.75X25)
33	400058X1	8	BOLT (M10X1.5X30MM)
34	CH8T-4205	4	WASHER-HARD (7.2X14.5X2MM)
35	400357X1	5	WASHER-HARD (M12X25.5X3)
36	400233X1	1	BOLT (M10X1.5X130)
37	136-5340	1	CABLE ASM (NEGATIVE)

1365658A
PR: t05i29k58b0073

BATTERY & WIRING GP - 136-5662

4 BATTERIES WITHOUT DISCONNECT SWITCH

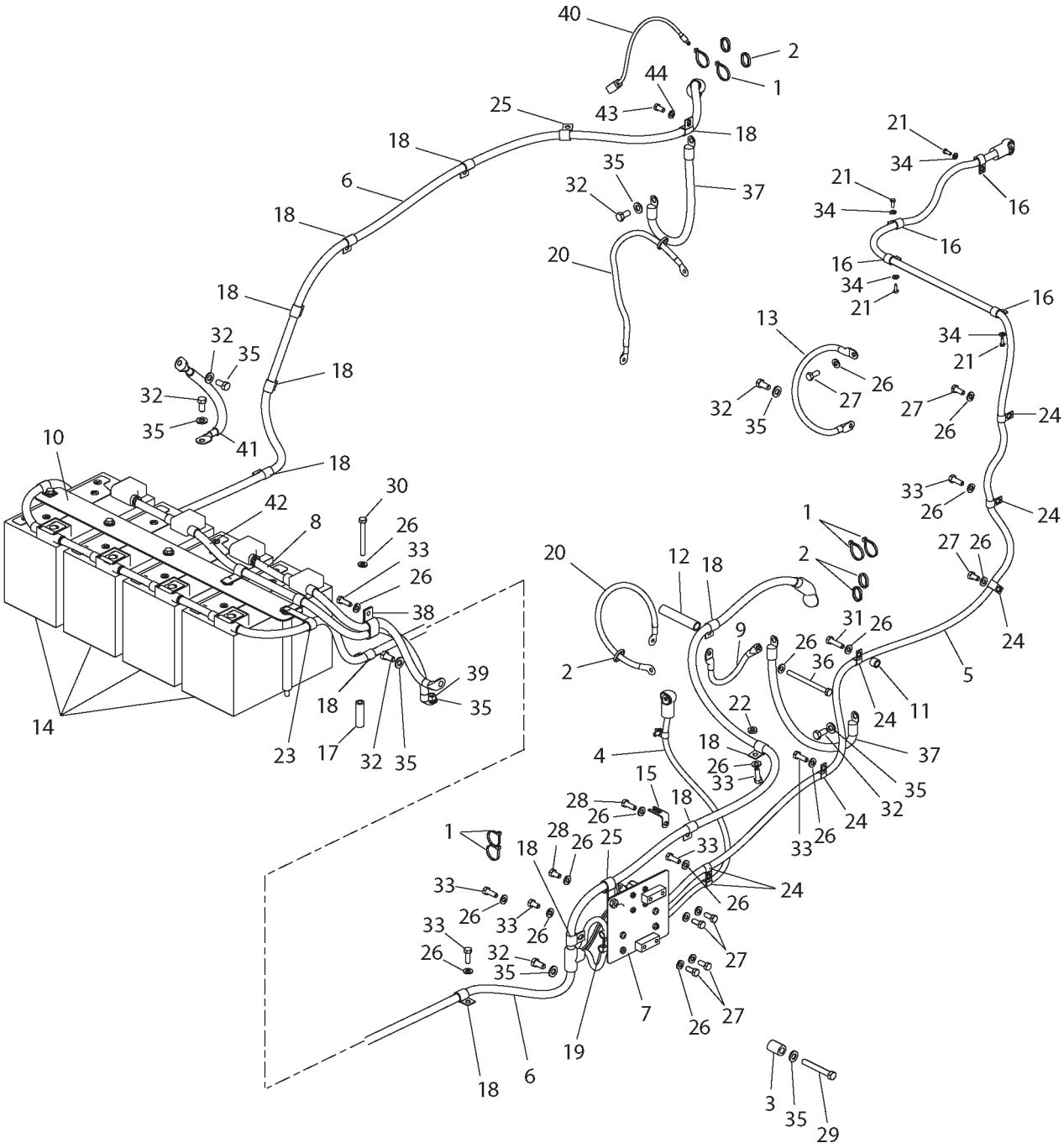

1365662A

BATTERY & WIRING GP - 136-5662

4 BATTERIES WITHOUT DISCONNECT SWITCH

ITEM	NUMBER	QTY	DESCRIPTION
-	136-5662	--	BATTERY & WIRING GP (NOT SERVICED)
1	400837X1	9	STRAP-CABLE (44.45X4.93MM)
2	CH7K-1181	5	STRAP-CABLE (0.19-4.00)
3	CH8V-9708	1	SPACER (4.31IDX25.4ODX35MM
4	136-5225	1	CABLE ASM-BATTERY (POSITIVE)
5	136-5270	1	CABLE ASM-BATTERY (POSITIVE)
6	136-5631	1	CABLE ASM (POSITIVE)
7	136-5654	1	CIRCUIT BREAKER GP (NOT SERVICED) (SEE BREAKDOWN FOR COMPONENTS)
8	501112D1	1	CABLE ASM-4AWG (NEGATIVE)
9	142-9738	1	CABLE ASM (NEGATIVE)
10	142-9739	1	MOUNTING GP-BATTERY (NOT SERVICED) (SEE BREAKDOWN FOR COMPONENTS)
11	CH200-8649	1	SPACER
12	CH211-3590	1	SPACER
13	223-0687	1	CABLE-GROUND
14	502446D1	4	BATTERY-MAINT FREE (DRY)
	CH123-1373	6	PLUG ASM-FILLER
15	CH132-5789	1	CLIP-LADDER 90DEGX47.5MM V COAT
16	CH134-3988	4	CLIP
17	CH212-0279	2	SPACER
18	CH3S-8664	14	CLIP-LOOP (19.05ID)
19	CH4K-8864	4	CLIP-LOOP (14.29ID)
20	500627D1	1	CABLE ASM-NEG (ALT GND) (1060MM LG) (EARLY VERSION)
20	502183D1	1	CABLE ASM-NEG (ALT GND) (472.5MM LG) (LATER VERSION)
21	400152X1	4	BOLT (M6X1X16MM)
22	CH5J-4715	1	WASHER
23	400695X1	1	CLIP-LOOP (20.64ID)
24	CH8M-2770	8	CLIP
25	CH8S-0948	4	CLIP
26	400287X1	25	WASHER-HARD (11X21X2.5)
27	400039X1	6	BOLT (M10X1.5X25MM)
28	400040X1	6	BOLT (M10X1.5X20MM)
29	400046X1	1	BOLT (M12X1.75X90)
30	400225X1	2	BOLT (M10X1.5X90MM)
31	400052X1	1	BOLT (M10X1.5X40)
32	400055X1	7	BOLT (M12X1.75X25)
33	400058X1	9	BOLT (M10X1.5X30MM)
34	CH8T-4205	4	WASHER-HARD (7.2X14.5X2MM)
35	400357X1	9	WASHER-HARD (M12X25.5X3)
36	400176X1	1	BOLT (M10X1.5X130)
37	136-5340	2	CABLE ASM (NEGATIVE)
38	CH100-4336	1	CLIP-LOOP (10.3 DBL)
39	CH8T-4244	1	NUT (M12X1.75)
40	136-5657	1	HARNESS ASM
41	142-9839	2	CABLE ASM (NEGATIVE)
42	501110D1	1	CABLE ASM (NEGATIVE)
43	400153X1	1	BOLT (3/8-16X19MM)
44	CH8T-4896	1	WASHER-HARD (10IDX18.5ODX2.5)

BATTERY & WIRING GP - 136-5663
4 BATTERIES WITH DISCONNECT SWITCH

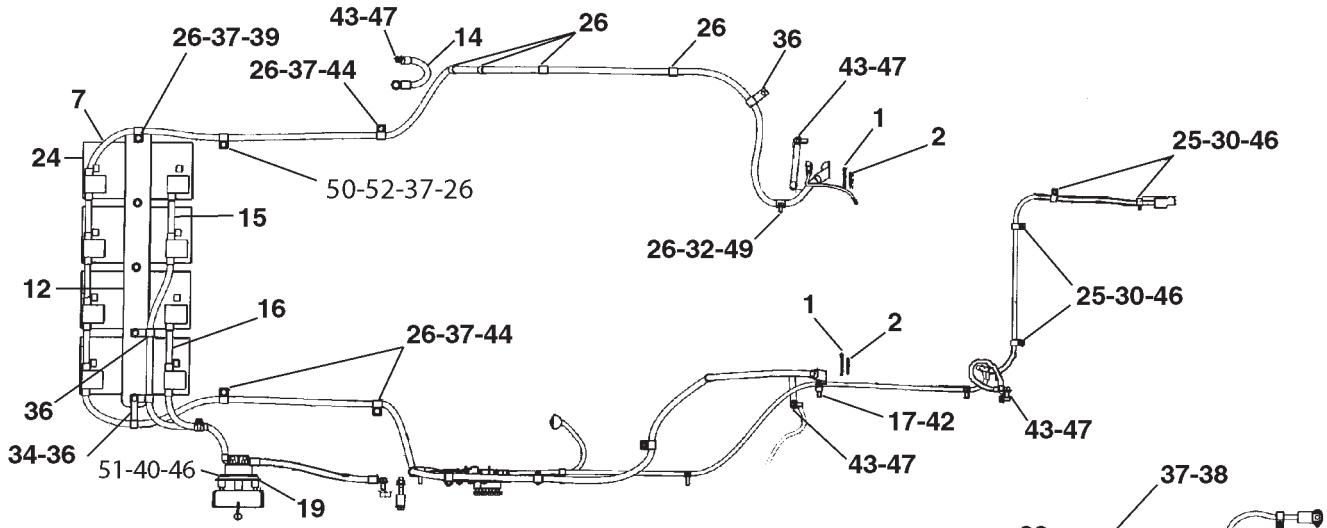

TOP VIEW

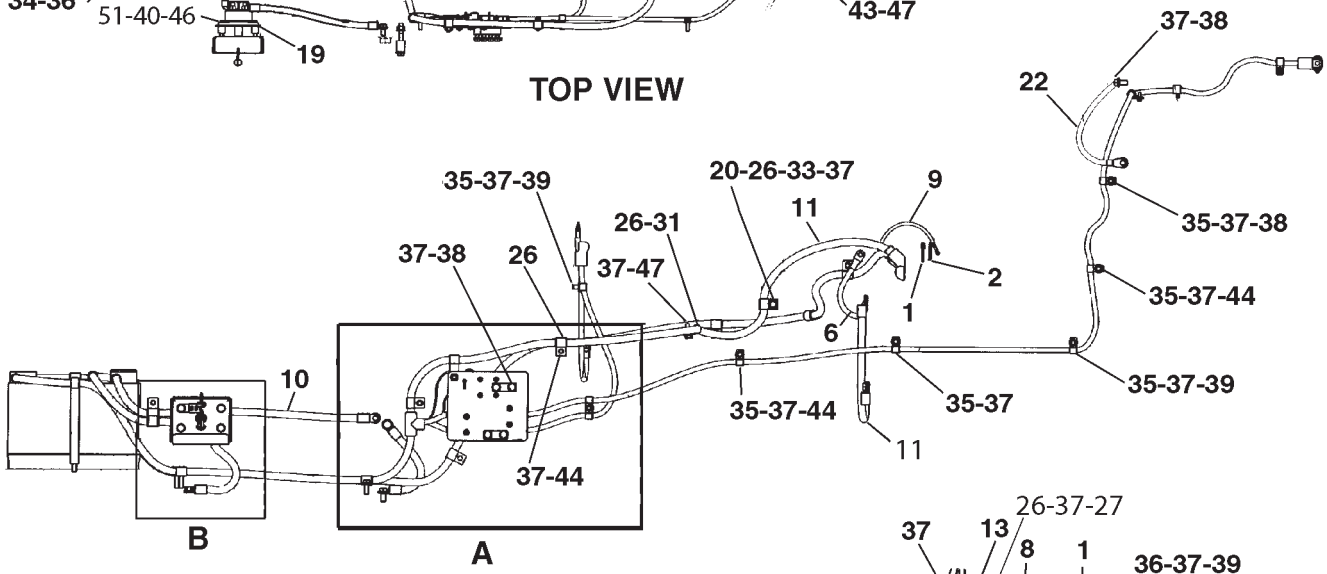

LEFT SIDE VIEW

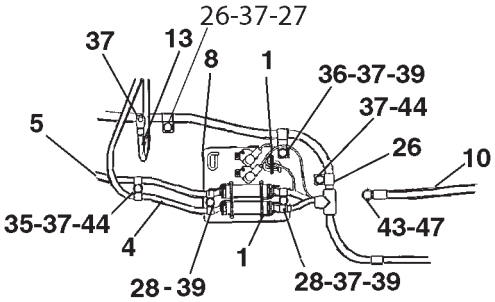

DETAIL A

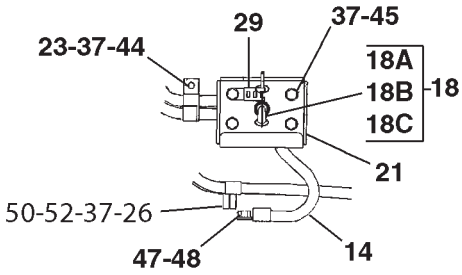

DETAIL B

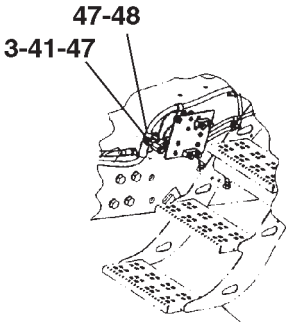

STEP VIEW

0892416B

BATTERY & WIRING GP - 136-5663

4 BATTERIES WITH DISCONNECT SWITCH

ITEM	NUMBER	QTY	DESCRIPTION
-	502906D1	--	BATTERY & WIRING GP (NOT SERVICED)
-	136-5663	--	BATTERY & WIRING GP [A] (NOT SERVICED)
1	400837X1	9	STRAP-CABLE
2	CH7K-1181	5	STRAP-CABLE
3	CH8V-9708	1	SPACER
4	136-5225	1	CABLE ASM-BATTERY (POSITIVE)
5	136-5270	1	CABLE ASM-BATTERY (POSITIVE)
6	136-5340	2	CABLE ASM (NEGATIVE)
7	136-5631	1	CABLE ASM-POSITIVE
8	136-5654	1	CIRCUIT BREAKER GP (NOT SERVICED) (SEE BREAKDOWN FOR COMPONENTS)
9	136-5657	1	HARNESS ASM (STARTER CONNECTOR)
	400511X1	1	WEDGE
	9G-3695	1	PLUG
10	502207D1	1	CABLE ASM (NEGATIVE)
11	142-9738	1	CABLE ASM (NEGATIVE)
12	142-9739	1	MOUNTING GP-BATTERY (NOT SERVICED) (SEE BREAKDOWN FOR COMPONENTS)
13	500627D1	1	STRAP (NEGATIVE) (S/N: PRIOR BAM40456;BBP40455;BCC40639;BDS40721)
13	500627D1	1	CABLE ASM (NEGATIVE) (S/N: EFF BAM40456-40600;BBP40455-40471;BCC40639-40696; BDS40721-40815)
13	502183D1	1	CABLE ASM (NEGATIVE) (S/N: EFF BAM40601; BBP40472;BCC40697;BDS40816)
14	142-9839	2	CABLE ASM (NEGATIVE)
15	501109D1	1	CABLE (NEGATIVE)
16	501111D1	1	CABLE (NEGATIVE)
17	CH200-8649	1	SPACER
18	201-2441	1	SWITCH ASM-DISCONNECT (INCLS ITEMS 18A THRU 18C)
18A	400357X1	4	WASHER-HARD (M12X25.5X3)
18B	CH8T-4244	4	NUT (M12X1.75)
18C	201-2442	1	KEY
19	203-0128	1	PLATE ASM
	CH9R-2672	4	BOSS (M10X20MM)

CONTINUED

[A] PART OF: 179-2195; 179-2196;
BASE UNIT AR;
502906D1 BATTERY GP;
500849D1 CAB AR-DELUXE

BATTERY & WIRING GP - 136-5663
4 BATTERIES WITH DISCONNECT SWITCH

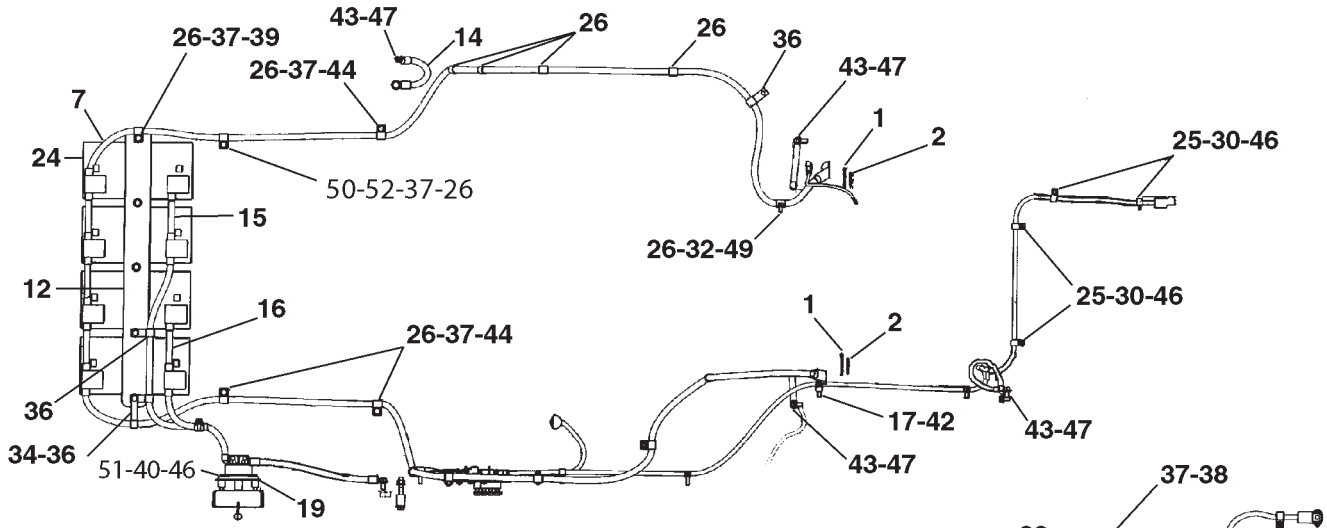

TOP VIEW

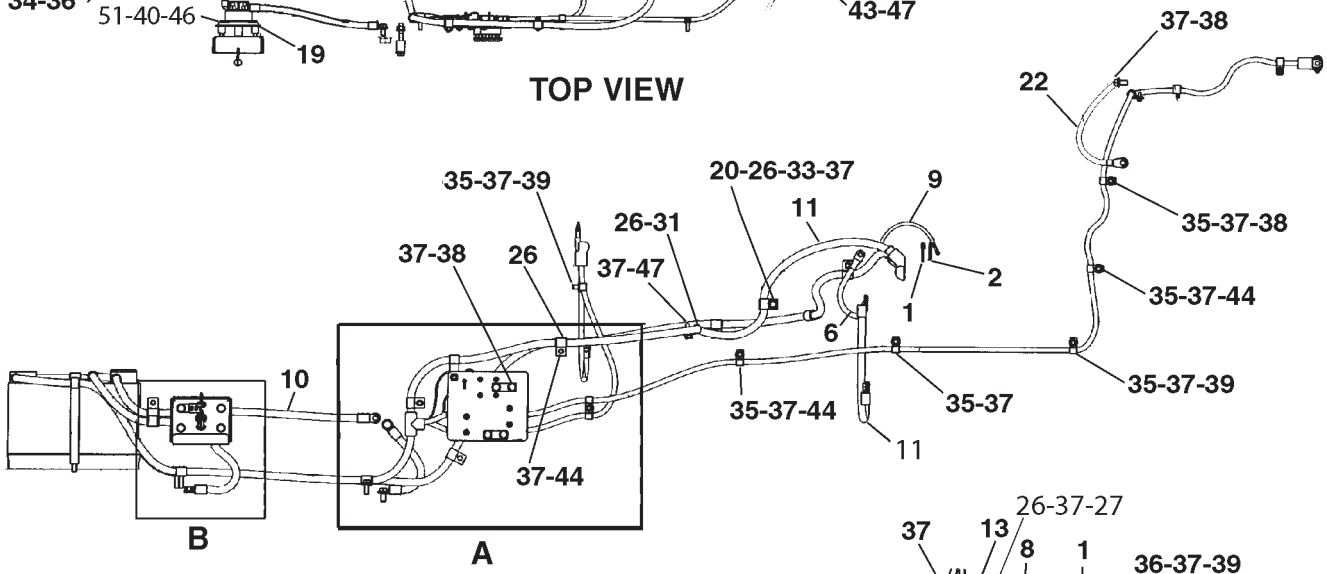

LEFT SIDE VIEW

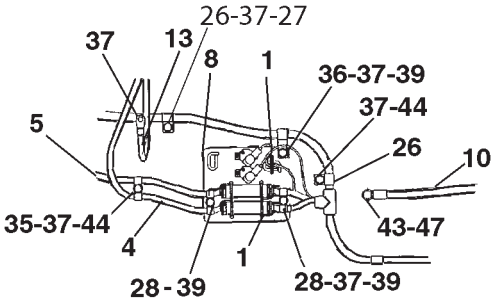

DETAIL A

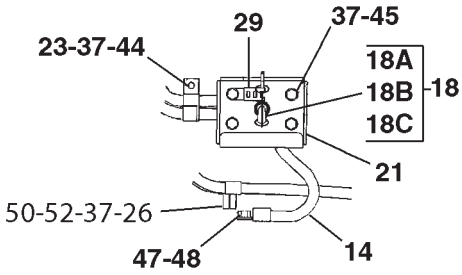

DETAIL B

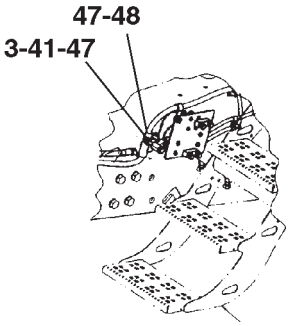

STEP VIEW

0892416B

BATTERY & WIRING GP - 136-5663

4 BATTERIES WITH DISCONNECT SWITCH

ITEM	NUMBER	QTY	DESCRIPTION
-	136-5663	--	BATTERY & WIRING GP [A] (NOT SERVICED)
20	CH211-3590	1	SPACER
21	218-2771	1	GUARD
22	223-0687	1	CABLE ASM-GROUND
23	CH100-4336	1	CLIP
24	502446D1	4	BATTERY (MAINT-FREE 12V-DRY)
	123-1373	6	PLUG ASM-FILLER
25	CH134-3988	4	CLIP-LOOP (15.88 ID COATED)
26	CH3S-8664	14	CLIP-LOOP (19.05 ID)
27	CH132-5789	1	CLIP-LADDER (90DEGX47.5MM VCOAT)
28	CH4K-8864	4	CLIP-LOOP (14.29 ID)
29	CH4P-7581	1	CLIP-LADDER (15DEGX12.5MM VCOAT)
30	400152X1	4	BOLT (M6X1X16MM)
31	CH5J-4715	1	WASHER (10.3X20.6X4.2)
32	400153X1	1	BOLT (3/8-16X0.75 IN)
33	400176X1	1	BOLT (3/8-16X133)
34	400695X1	1	CLIP-LOOP (20.64 ID)
35	CH8M-2770	8	CLIP-LOOP (12.7 ID)
36	CH8S-0948	4	CLIP-LOOP (20.64 ID)
37	400287X1	29	WASHER-HARD (11X21X2.5)
38	400039X1	6	BOLT (M10X1.5X25MM)
39	400040X1	6	BOLT (M10X1.5X20MM)
40	400221X1	2	BOLT (M6X1X20MM)
41	400046X1	1	BOLT (M12X1.75X90)
42	400052X1	1	BOLT (M10X1.5X40)
43	400055X1	6	BOLT (M12X1.75X25)
44	400058X1	9	BOLT (M10X1.5X30MM)
45	400059X1	4	BOLT (M10X1.5X35MM)
46	CH8T-4205	8	WASHER-HARD (7.2X14.5X2MM)
47	400357X1	9	WASHER-HARD (M12X25.5X3)
48	CH8T-4244	2	NUT (M12X1.75)
49	CH8T-4896	1	WASHER-HARD (10.2X18.5X2.5)
50	CH212-0279	2	SPACER (19.1ODX11.1X62)
51	400300X1	2	NUT (M6X1)
52	400225X1	1	BOLT (M10X1.5X90)

[A] PART OF: 179-2195; 179-2196;
BASE UNIT AR;
502906D1 BATTERY GP;
500849D1 CAB AR-DELUXE

0892416B
PR: t05i29k58b0075

BATTERY GP - 136-5659

3 BATTERY W/DISCONNECT SWITCH

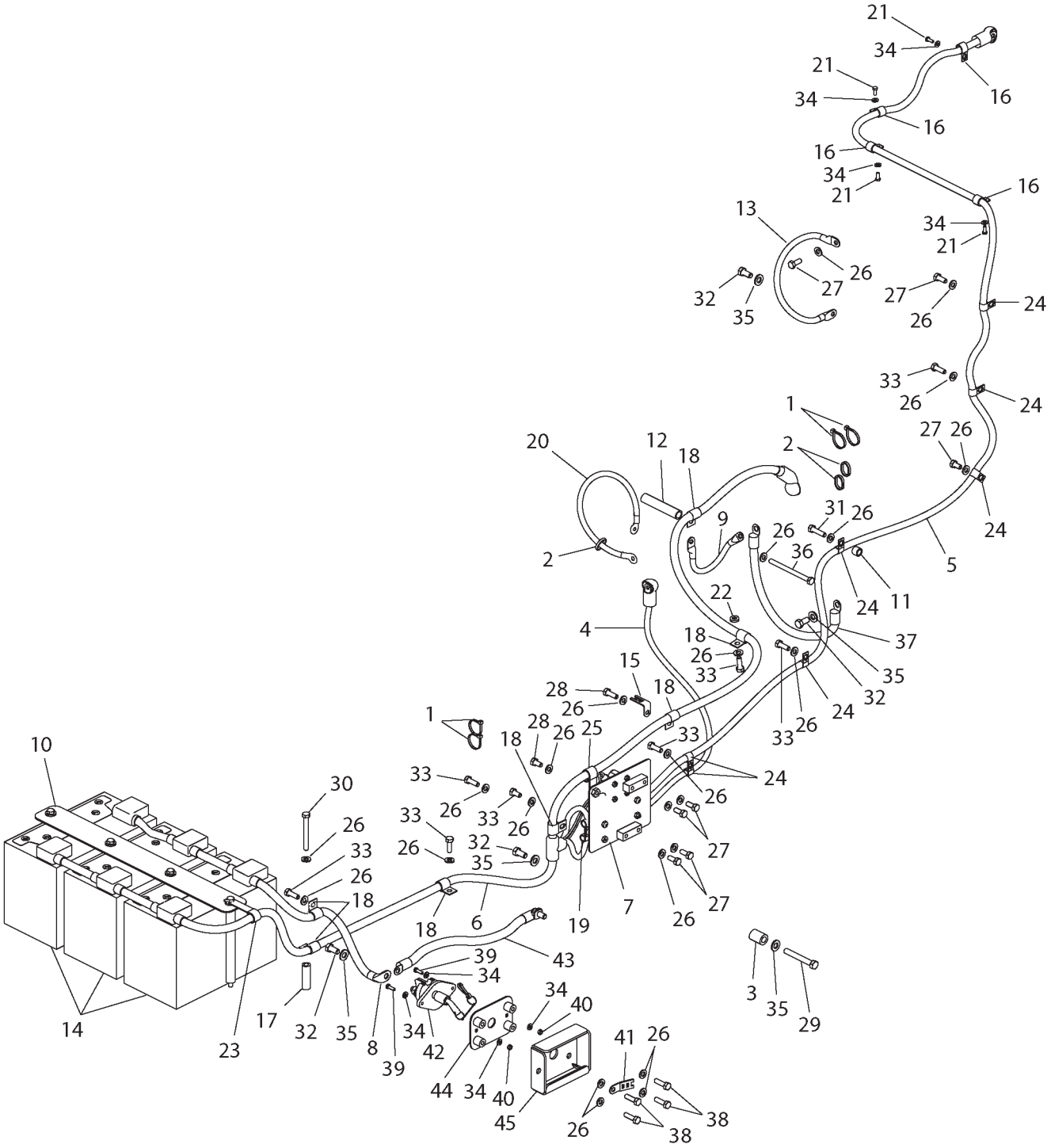

1365659A

BATTERY GP - 136-5659

3 BATTERY W/DISCONNECT SWITCH

ITEM	NUMBER	QTY	DESCRIPTION
-	136-5659	--	BATTERY GP
1	400837X1	7	STRAP-CABLE (PLASTIC)
2	CH7K-1181	3	STRAP-CABLE 0.19-4.00
3	CH8V-9708	1	SPACER
4	136-5225	1	CABLE AS-POS
5	136-5270	1	CABLE AS-POS
6	136-5612	1	CABLE AS-POS
7	136-5654	1	BREAKER GP-CIRCUIT (NOT SERVICED) (SEE BREAKDOWN FOR COMPONENTS)
8	501113D1	1	CABLE AS-NEG
9	142-9738	1	CABLE AS-NEG
10	142-9760	1	MOUNTING GP-BATTERY (NOT SERVICED) (SEE BREAKDOWN FOR COMPONENTS)
11	CH200-8649	1	SPACER-19ODX12.7IDX14.3MM
12	CH211-3590		SPACER-21.34ODX15.8IDX14.3MM
13	223-0687	1	CABLE AS-GND
14	502446D1	3	BATTERY (MAINT FREE-DRY)
15	CH132-5789	1	CLIP-LADDER 90DEGX47.5MM V COAT
16	CH134-3988	4	CLIP-LOOP 15.88 ID W/COAT
17	CH212-0279	1	SPACER 19.1ODX11.1IDX62
18	CH3S-8664	7	CLIP-LOOP 19.05 ID
19	CH4K-8864	4	CLIP-LOOP 14.29ID
20	500627D1	1	CABLE ASM (NEGATIVE) (S/N: PRIOR BAM40601;BBP40472;BCC40697;BDS40816)
20	502183D1	1	CABLE ASM (NEGATIVE) (S/N: EFF BAM40601; BBP40472;BCC40697;BDS40816)
21	400152X1	4	BOLT-M6X1X16MM ZNDI HHD 10.9
22	CH5J-4715	1	WASHER-HARD 10.3IDX20.6ODX4.2
23	400695X1	1	CLIP-LOOP 20.64ID
24	CH8M-2770	8	CLIP-LOOP 12.7 ID
25	CH8S-0948	1	CLIP-LOOP-20.64 ID
26	400287X1	25	WASHER-HARD 11IDX21ODX2.5 ZND1
27	400039X1	8	BOLT-M10X1.5X25 ZNDI HHD 10.9
28	400040X1	4	BOLT-M10X1.5X20 ZNDI HHD 10.9
29	400046X1	1	BOLT-M12X1.75X90 ZNDI HHD 10.9
30	400225X1	1	BOLT-M10X1.5X90 ZNDI HHD 10.9
31	400052X1	1	BOLT-M10X1.5X40 ZNDI HHD 10.9
32	400055X1	3	BOLT-M12X1.75X25 ZNDI HHD 10.9
33	400058X1	8	BOLT-M10X1.5X30 ZNDI HHD 10.9
34	CH8T-4205	8	WASHER-HARD 7.2IDX14.5ODX2MM
35	400357X1	4	WASHER-HARD-M12X25.50DX3THK
36	400233X1	1	BOLT-M10X1.5X130 ZNDI HHD 10.9
37	136-5340	1	CABLE AS-NEG
38	400059X1	4	BOLT-M10X1.5X35 ZNDI HHD 10.9
39	400221X1	2	BOLT-M6X1X20MM ZNDI HHD 10.9
40	400300X1	2	NUT M6X1
41	CH4P-7581	1	CLIP-LADDER 15DEGX12.5MM V COAT
42	201-2440	1	SWITCH AS-MASTER
	201-2442	1	KEY
	400357X1	2	WASHER-HARD
	CH8T-4244	2	NUT
43	142-9717	1	CABLE AS-NEG
44	203-0128	1	PLATE AS
45	218-2771	1	GUARD

PART OF 179-2193; 179-2194
BASIC UNIT AR

1365659A
PR: t05i29k58b0076

CIRCUIT BREAKER GP - 136-5654
ELECTRONIC CONTROL MODULE

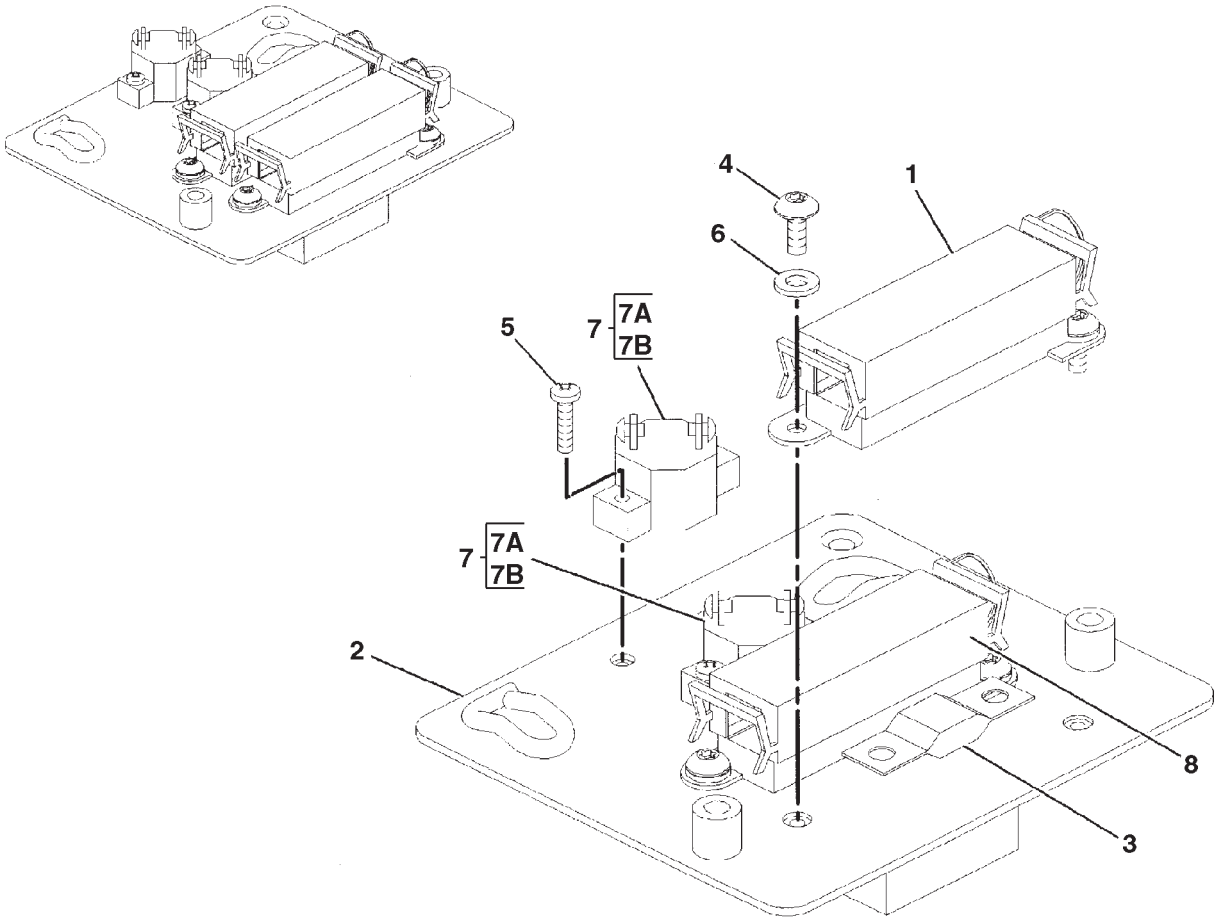

0899311A

CIRCUIT BREAKER GP - 136-5654
ELECTRONIC CONTROL MODULE

ITEM	NUMBER	QTY	DESCRIPTION
-	136-5654	--	CIRCUIT BREAKER GP [A] (NOT SERVICED)
1	136-5600	1	FUSE (BATTERY)(175 AMP)
2	136-5655	1	BRACKET ASM
3	155-0038	2	HOLDER-FUSE
4	CH9X-2044	4	SCREW-TRUSS HEAD (M6X1X16MM)
5	CH8T-4127	4	SCREW-MACHINE (M5X0.8X20MM)
6	CH8T-4205	4	WASHER-HARD (7.2X14.5X2MM)
7	CH9H-1958	1	CIRCUIT BREAKER GP (20 AMP)(ENGINE ECM)
7A	CH6V-8376	2	SCREW-MACHINE (8-32X0.25 IN)
7B	CH9B-7233	2	LOCKWASHER
8	220-5736	1	FUSE (ALTERNATOR)(200 AMP)

[A] PART OF 136-5658;136-5659;136-5662;
136-5663 BATTERY & WIRING GP

0899311A
PR: t05i29k58b0077

CONTROL & WIRING GP - 136-5670

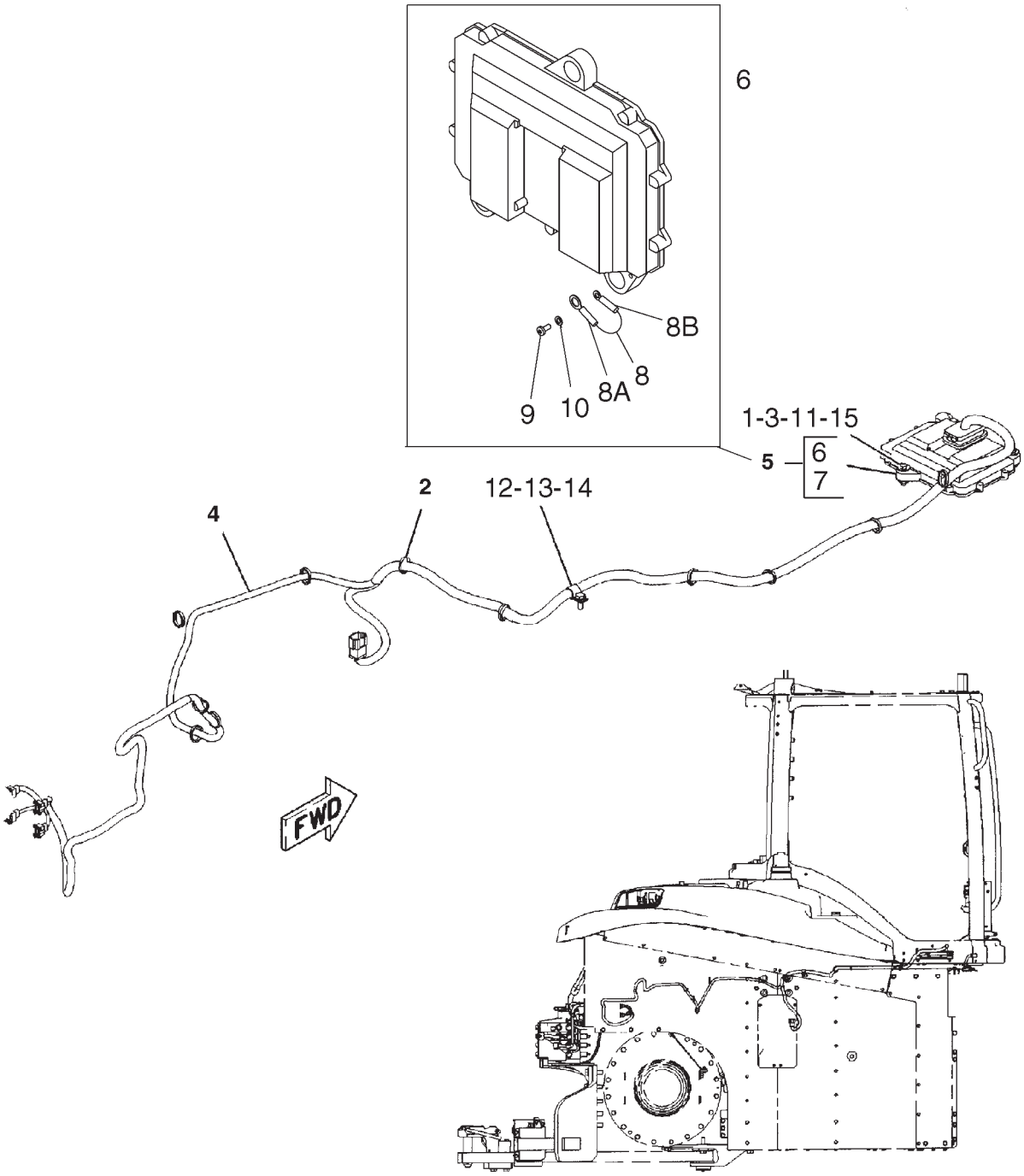

RIGHT SIDE VIEW

1365670E

CONTROL & WIRING GP - 136-5670

ITEM	NUMBER	QTY	DESCRIPTION
-	136-5670	--	CONTROL & WIRING GP [A][B]
1	CH6I-1418	3	SPACER (8.2X12.7X28.7)
2	CH7K-1181	11	STRAP-CABLE
3	CH8T-9655	6	MOUNT (ISOLATION)
4	136-5536	1	HARNESS ASM
5	229-0888	1	ELECTRONICS GP (INCLS ITEMS 6 & 7) (NOT SERVICED)
6	216-0658	1	CONTROL GP (INCLS ITEMS 8 THRU 10)
	CH126-1773	1	CAP-CONNECTOR (SEALED)
7	256-0184	1	SOFTWARE (LOCATED ON "ONEAGCO" OR CALL 507-847-7222)
8	CH7X-6315	1	STRAP ASM (INCLS 8A & 8B)
8A	CH139-6911	1	TERMINAL-RING
8B	CH7H-1177	1	TERMINAL-RING
9	CH120-4897	1	SCREW-PAN HEAD (M4X0.7X9.5)
10	CH134-4126	1	WASHER (4.52X8.28X.76)
11	400001X1	3	BOLT (M8X1.25X40MM)
12	CH8M-2773	1	CLIP
13	400287X1	1	WASHER-HARD (11X21X2.5)
14	400039X1	1	BOLT (M10X1.5X25MM)
15	CH9N-0869	3	WASHER-HARD (8.8X25.5X2)

[A] PART OF:
180-1438 VALVE AR-IMPL
500795D1 VALVE AR-IMPL
502052D1 VALVE AR-IMPL
502218D1 CONVERSION GP-CONTROL VALVE
185-8699 CONVERSION GP-CONTROL VALVE

1365670E
PR: t05i29k58b0078

CONTROL & WIRING GP-HITCH - 136-5378
LIFT CIRCUIT

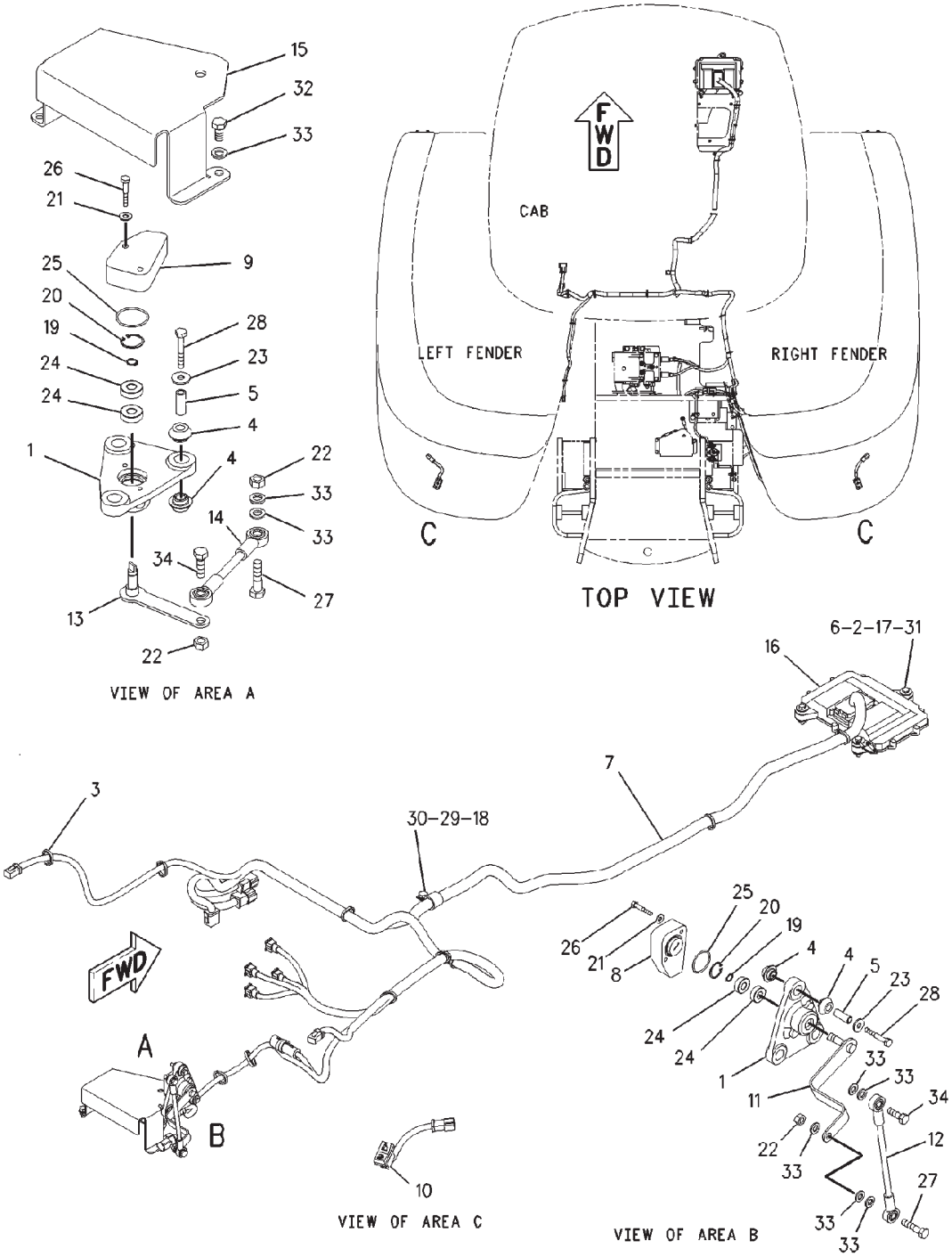

CONTROL & WIRING GP-HITCH - 136-5378

LIFT CIRCUIT

ITEM	NUMBER	QTY	DESCRIPTION
-	136-5378	--	CONTROL & WIRING GP-HITCH [A] (NOT SERVICED)
1	4E-2250	2	HOUSING
2	CH6I-1418	3	SPACER (8.2X12.7X28.7)
3	CH7K-1181	17	STRAP-CABLE
4	CH8C-5607	12	MOUNT (ISOLATION)
5	CH8C-5608	6	SPACER (6.5X9.5X25.4)
6	CH8T-9655	6	MOUNT (ISOLATION)
7	501118D1	1	HARNESS ASM-3PT HITCH
8	500619D1	1	SENSOR GP-POSITION (REAR HITCH HEIGHT-OUTER)
9	502003D1	1	SENSOR GP-POSITION (REAR HITCH HEIGHT-INNER)
10	171-1229	2	SWITCH ASM (REAR HITCH RAISE/LOWER) (INCLS RECEPTACLE)
	102-8804	1	KIT-RECEPTACLE (4 PIN)(W/WEDGE)
11	190-2838	1	ARM ASM
12	190-2839	1	ROD ASM
13	198-8376	1	ARM ASM
14	198-8377	1	ROD ASM
15	199-6263	1	SHIELD
16	229-0891	1	ELECTRONICS GP-A2004 (HITCH SDM) (NOT SERVICED) (SEE BREAKDOWN FOR COMPONENTS)
17	CH9N-0869	3	WASHER-HARD (8.8X25.5X2)
18	CH1S-0994	1	CLIP (20.64ID)
19	CH2H-3429	2	RING-RETAINING
20	CH2L-6726	2	RING-RETAINING
21	CH4B-4274	4	WASHER (5.5X13X1.2)
22	400340X1	3	NUT (M8X1.25)
23	CH5P-4115	6	WASHER-HARD (7.2X19X2)
24	CH6D-3025	4	BALL BEARING
25	CH6V-0894	2	SEAL-O-RING
26	400160X1	4	BOLT (M5X0.8X30MM)
27	400188X1	2	BOLT (M8X1.25X35MM)
28	400205X1	6	BOLT (M6X1X40MM)
29	400287X1	1	WASHER-HARD (11X21X2.5)
30	400039X1	1	BOLT (M10X1.5X25MM)
31	400060X1	3	BOLT (M8X1.25X40MM)
32	400227X1	3	BOLT (M8X1.25X16MM)
33	400339X1	10	WASHER-HARD (8.8X16X2)
34	400341X1	2	BOLT (M8X1.25X25MM)

[A] PART OF 169-0027;169-0028;179-0852;
180-6639 HITCH AR-3 POINT

00884276
PR: t05i29k58b0079

CONTROL AR-COMMUNICATION - 216-0852

ISO

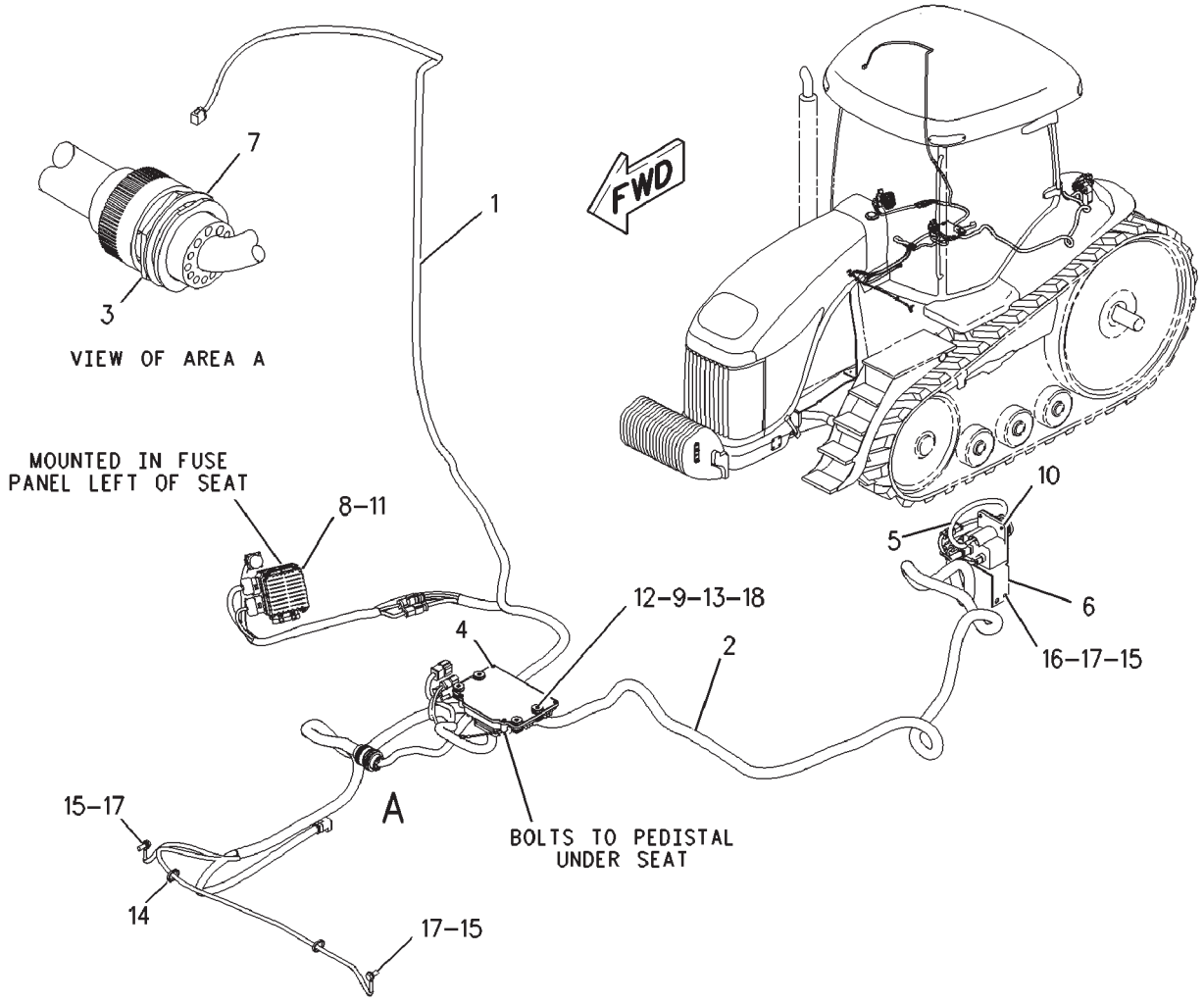

00892916

CONTROL AR-COMMUNICATION - 216-0852

ISO

ITEM	NUMBER	QTY	DESCRIPTION
-	216-0852	--	CONTROL AR-COMMUNICATIONS (NOT SERVICED)
1	500910D1	1	HARNESS ASM (MAIN CAB)
2	502434D1	1	HARNESS ASM (ISO)
3	400295X1	1	NUT (1 11/16-18)
4	216-0614	1	ELECTRONICS GP-MACHINE (COMMUNICATION) (NOT SERVICED) (SEE BREAKDOWN FOR COMPONENTS)
5	502486D1	1	HARNESS ASM
6	500510D1	1	BRACKET
7	CH128-4249	1	LOCKWASHER
8	501829D1	1	BLOCK ASY-FUSE (SEE BREAKDOWN FOR COMPONENTS)
9	400340X1	4	NUT (M8X1.25)
10	CH6V-8931	4	SCREW-WASHER HEAD (M6X1X16)
11	400208X1	4	BOLT-SOCKET HEAD (M5X0.8X40MM)
12	CH9N-0869	8	WASHER-HARD (8.8X25.5X2)
13	CH6I-1418	4	SPACER (8.2X12.7X28.7)
14	CH7K-1181	22	STRAP-CABLE
15	400287X1	2	WASHER-HARD (11X21X2.5)
16	WR522218	2	NUT (M10X1.5)
17	400039X1	4	BOLT (M10X1.5X25MM)
18	CH8T-9655	8	MOUNT-ISOLATION

00892916
PR: t05i29k58b0080

CONTROL AR-MACHINE - 216-0874
ISO READY UPGRADE

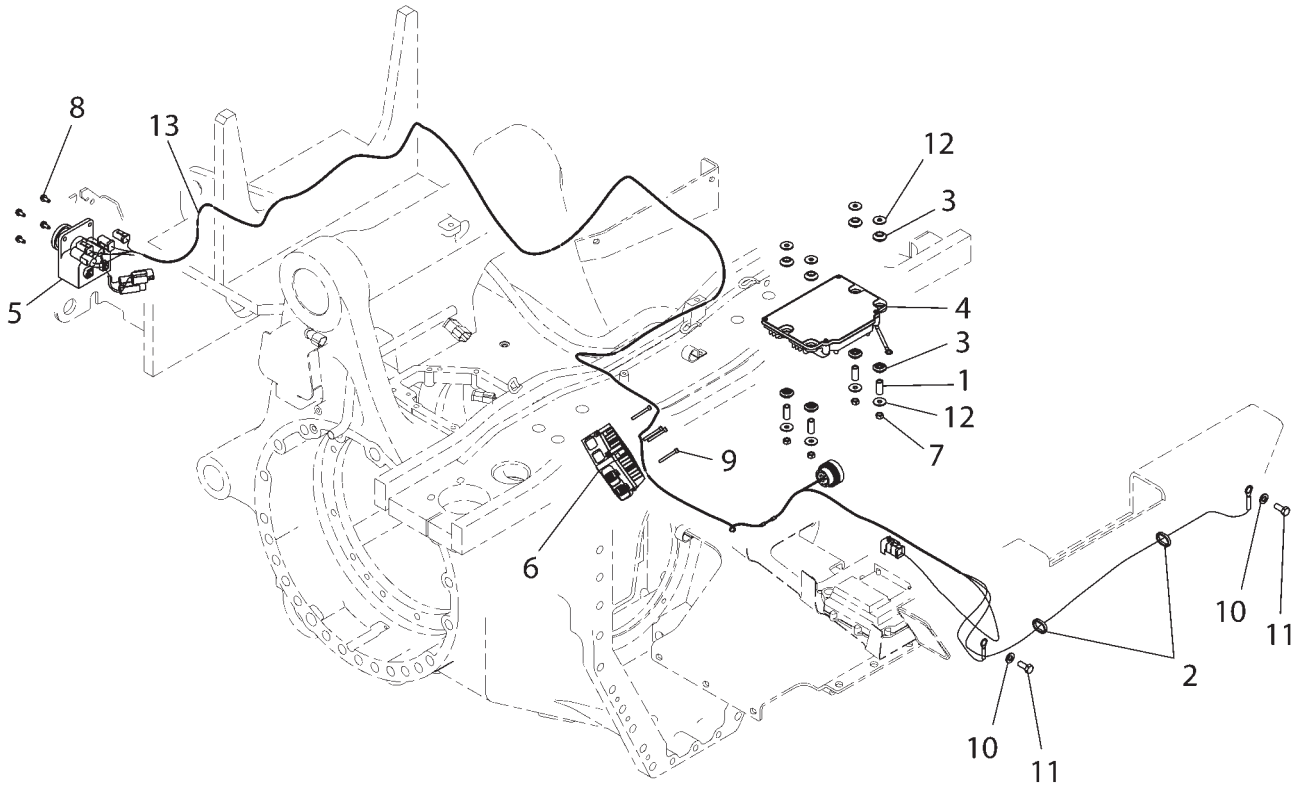

2160874F

CONTROL AR-MACHINE - 216-0874

ISO READY UPGRADE

ITEM	NUMBER	QTY	DESCRIPTION
-	216-0874	--	CONTROL AR-MACHINE
1	CH6I-1418	4	SPACER
2	CH7K-1181	22	STRAP-CABLE
3	400941X1	8	MOUNT-ISO
4	216-0614	1	ELECTRONICS GP-MACHINE (COMMUNICATION) (NOT SERVICED) (SEE BREAKDOWN FOR COMPONENTS)
5	502486D1	1	HARNESS ASM-ISO
	502242D1	1	HARNESS ASM
	502487D1	1	CONNECTOR ASM (REPLACEMENT PINS LISTED BELOW)
	400382X1	2	PIN-CONNECTOR (12-14AWG)
	400899X1	2	PIN-CONNECTOR (8-10AWG)
6	501829D1	1	PANEL GP-FUSE (SEE BREAKDOWN FOR COMPONENTS)
7	400340X1	4	NUT (M8X1.25)
8	CH6V-8931	4	SCREW-WASHER HEAD (M6X1X16)
9	400208X1	4	BOLT-SOCKET HEAD (M5X0.8X40MM)
10	400287X1	2	WASHER-HARD
11	400039X1	2	BOLT (M10X1.5X25)
12	CH9N-0869	8	WASHER-HARD (8.8X25.5X2)
13	502434D1	1	HARNESS ASM (W/TERMINATOR)
	502474D1	1	TERMINATOR-ACTIVE

2160874F
PR: t05i29k58b0081

CONTROL AR - AUTOGUIDE SYSTEM
500628D1

NO ILLUSTRATION

NOTIF

ITEM	NUMBER	QTY	DESCRIPTION
-	500628D1	--	CONTROL AR (NOT SERVICED)
	79019518B		MANUAL, OPERATOR'S-AUTOGUIDE
	500606D1	1	SWITCH GP-GUIDANCE (NOT SERVICED, (SEE BREAKDOWN FOR COMPONENTS)
	500607D1	1	TRANSMITTER & RECEIVER GP (GLOBAL POSITIONING SYSTEM) (SEE BREAKDOWN FOR COMPONENTS)

NOTIF
PR: t05i29k58b0082

KIT CONTROL AR-AUTOGUIDE SYSTEM

500630D1
FIELD INSTALLED

NO ILLUSTRATION

NOTIF

KIT CONTROL AR-AUTOGUIDE SYSTEM

500630D1
FIELD INSTALLED

ITEM	NUMBER	QTY	DESCRIPTION
-	500630D1	--	KIT CONTROL AR
1	79019518B	1	MANUAL, OPERATOR'S-AUTOGUIDE
2	500606D1	1	SWITCH GP-GUIDANCE (GPS) (NOT SERVICED) (SEE BREAKDOWN FOR COMPONENTS)
3	500607D1	1	RECEIVER GP-TRANSMITTER (GPS) (SEE BREAKDOWN FOR COMPONENTS)
4	-----	1	(NOT USED ON THIS MODEL)

NOTIF
PR: t05i29k58b0083

CONTROL GP-POWER TAKE-OFF - 152-0446

ROW

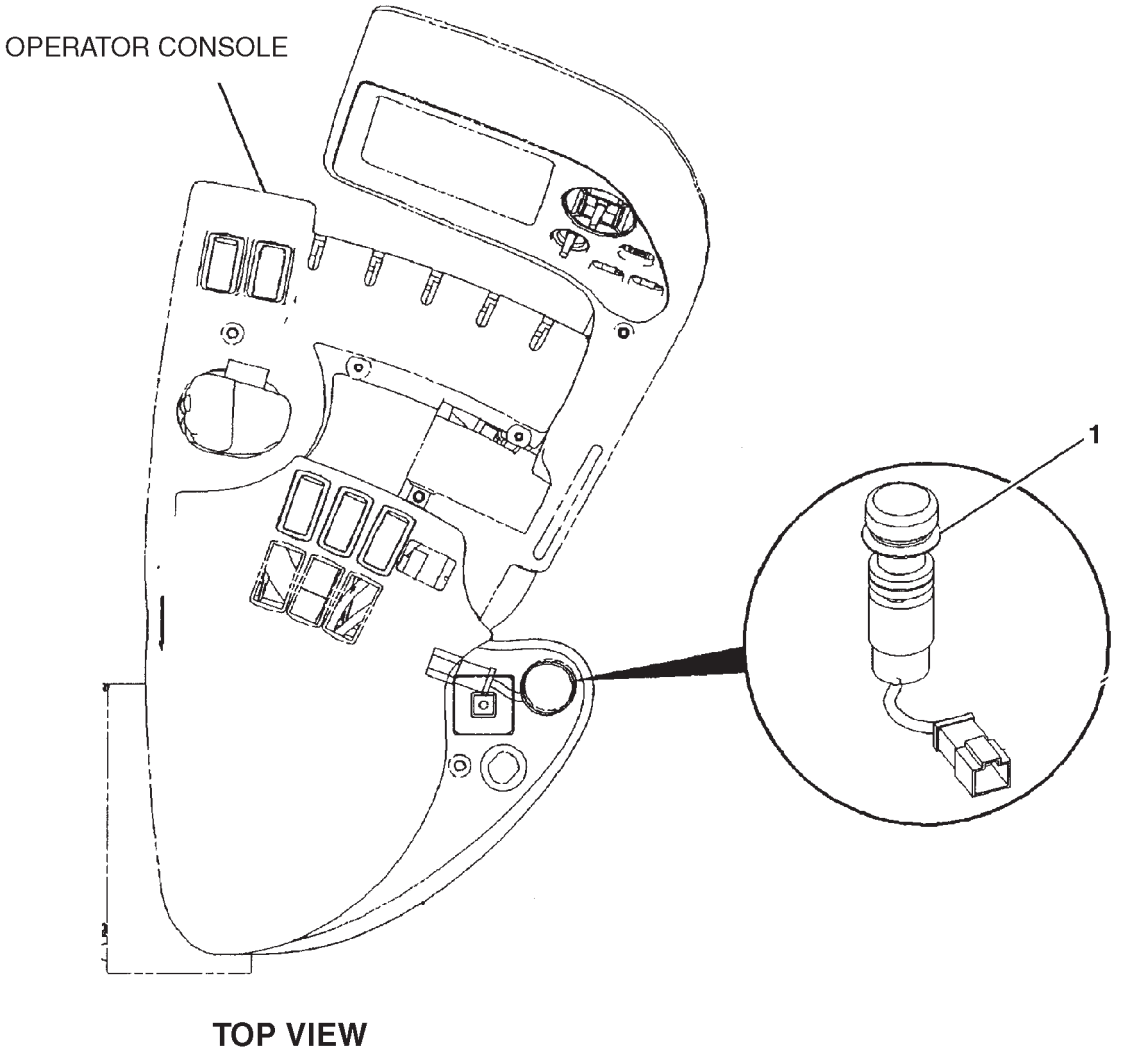

CONTROL GP-POWER TAKE-OFF - 152-0446

ROW

ITEM	NUMBER	QTY	DESCRIPTION
-	152-0446	--	CONTROL GP-PTO [A] (NOT SERVICED)
1	502423D1	1	KIT-PTO SWITCH ADAPT (SEE BREAKDOWN FOR COMPONENTS)

[A] PART OF 163-0400 KIT-PTO

1520446A
PR: t05i29k58b0084

CONTROL GP-POWER TAKE-OFF - 224-5884
EAME

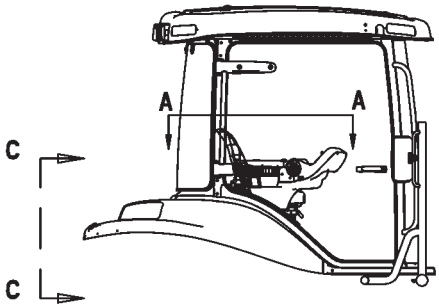

RIGHT SIDE VIEW OF CAB

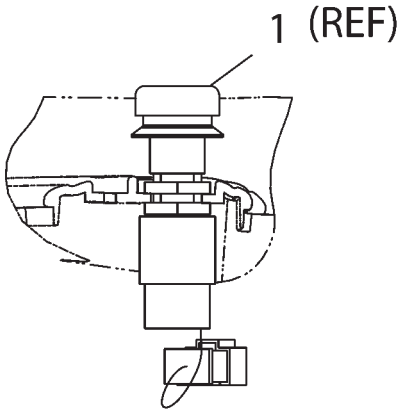

VIEW B-B
ROTATED CW 90o

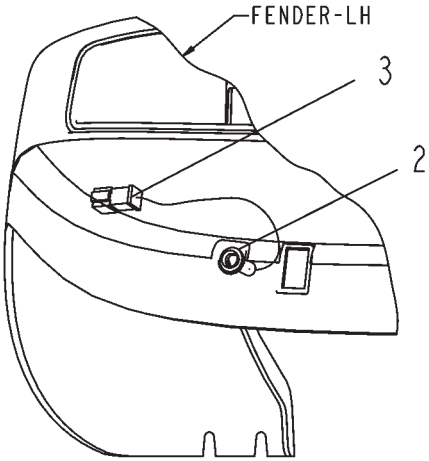

VIEW C-C

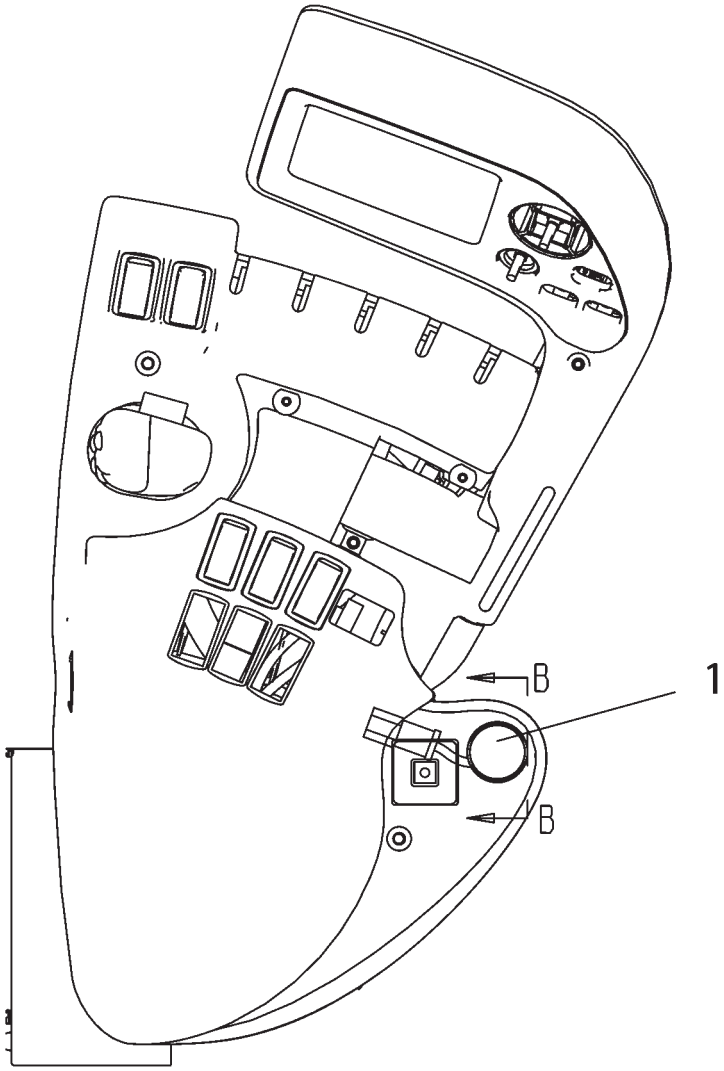

VIEW A-A

ITEM	NUMBER	QTY	DESCRIPTION
-	224-5884	--	CONTROL GP-PTO [A] (NOT SERVICED)
1	502423D1	1	KIT-PTO SWITCH ADAPT
			(SEE BREAKDOWN FOR COMPONENTS)
2	CH176-4546	1	SWITCH ASM (PUSHBUTTON)
	CH172-3511	1	NUT-SWITCH MTG (5/8-24)
	CH6F-0253	1	WASHER-LOCK
	400561X1	5	PIN-CONNECTOR
3	400754X1	1	RECEPTICLE KIT, CONNECTOR

[A] PART OF 183-2197 GAUGE AR-TRACK;
224-8603 KIT-PTO

2245884C
PR: t05i29k58b0085

KIT-PTO SWITCH ADAPTOR
502423D1

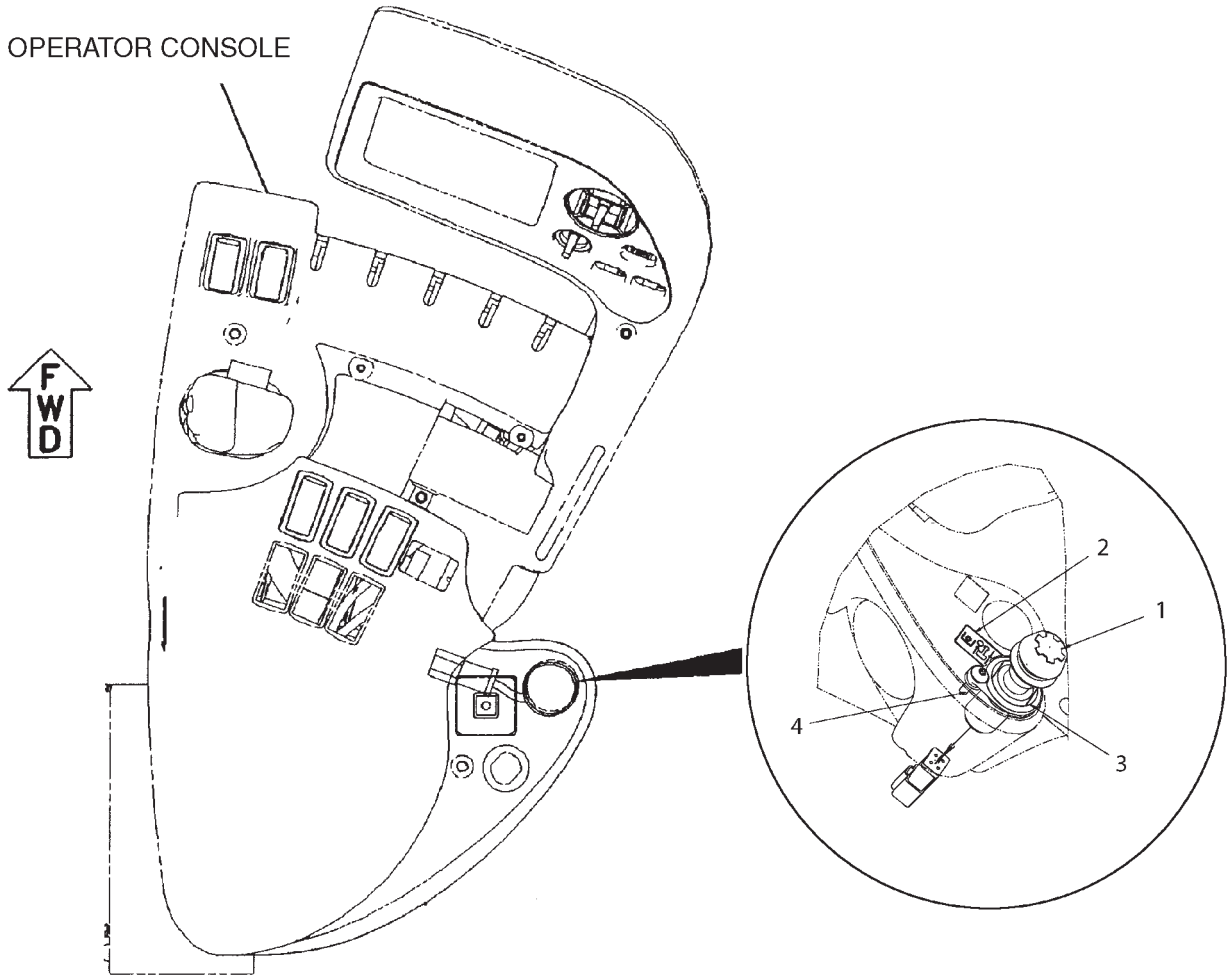

TOP VIEW

502423D1

KIT-PTO SWITCH ADAPTOR
502423D1

ITEM	NUMBER	QTY	DESCRIPTION
-	502423D1	--	KIT-PTO SWITCH ADAPTOR [A]
1	502009D1	1	SWITCH ASM-PTO
	400562X1	4	PIN
	400782X1	1	CONNECTOR-RECEPT
2	501532D1	1	FILM-PTO
3	502099D1	1	ADAPTOR
4	CH3E-8020	1	SCREW-TRUSS HD (M6X1X25MM)

[A] PART OF 502428D1;502428D1
REWORK AR;
152-0446;224-5884 CONTROL GP-PTO

502423DA
PR: t05i29k58b0086

ELECTRONICS GP-IMPLEMENT - 229-0891

(SOFTWARE)
3 POINT HITCH

NO ILLUSTRATION

NOTIF

ELECTRONICS GP-IMPLEMENT - 229-0891

(SOFTWARE)
3 POINT HITCH

ITEM	NUMBER	QTY	DESCRIPTION
-	229-0891	--	ELECTRONICS GP-IMPLEMENT [A] (NOT SERVICED)
1	256-0176	1	SOFTWARE GP-IMPLEMENT (REAR HITCH) (SOFTWARE ONLY) (LOCATED ON "ONEAGCO" OR CALL 507-847-7222)
2	216-0658	1	CONTROL GP-UNPROGRAMMED (HITCH) (SEE BREAKDOWN FOR COMPONENTS)

[A] PART OF 136-5378 CONTROL & WIRING GP-HITCH

NOTIF
PR: t05i29k58b0087

CONTROL GP-UNPROGRAMMED
216-0658

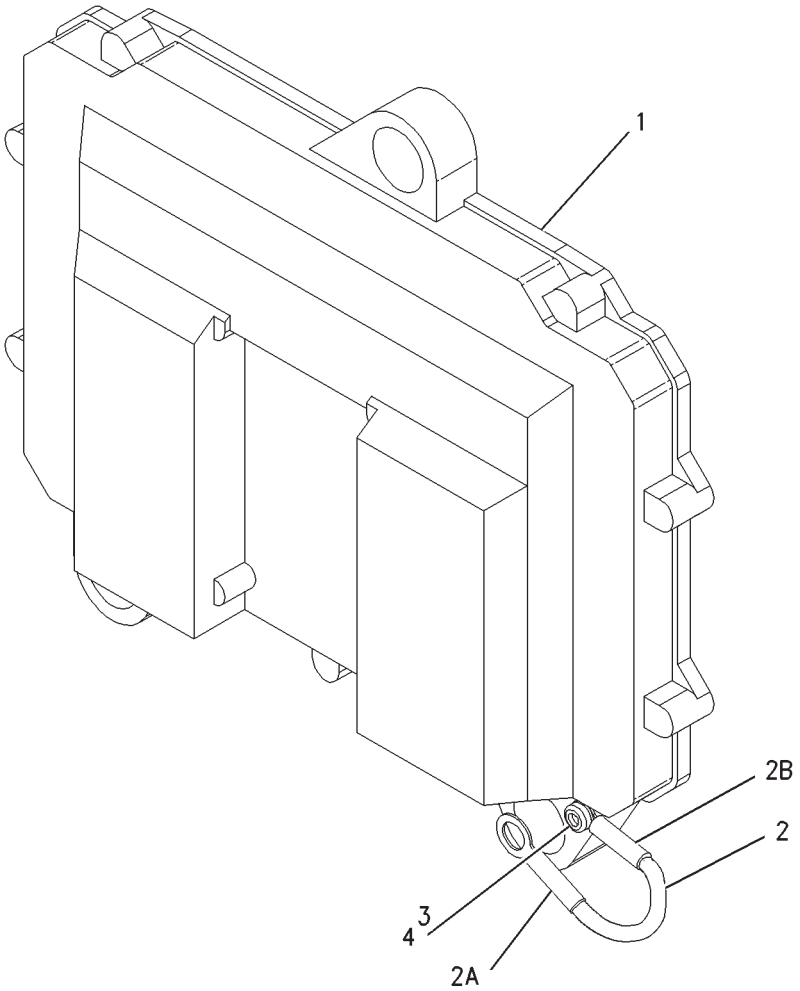

00818553

CONTROL GP-UNPROGRAMMED
216-0658

ITEM	NUMBER	QTY	DESCRIPTION
-	216-0658	--	CONTROL GP-UNPROGRAMMED [A]
1	-----	1	CONTROL ASM (NOT SERVICED SEPARATELY)
2	CH7X-6315	1	STRAP ASM
2A	CH139-6911	1	TERMINAL-RING
2B	CH7H-1177	1	TERMINAL-RING
3	CH120-4897	1	SCREW-PAN HEAD (M4X0.7X9.5)
4	CH134-4126	1	WASHER (4.52X8.28X.76)

[A] PART OF 229-0891 ELECTRONICS GP-IMPLEMENT

00818553
PR: t05i29k58b0088

ELECTRONICS GP-MACHINE - ISO
216-0614

NO ILLUSTRATION

NOTIF

ELECTRONICS GP-MACHINE - ISO
216-0614

ITEM	NUMBER	QTY	DESCRIPTION
-	216-0614	--	ELECTRONICS GP-MACHINE [A] (NOT SERVICED)
	201-9041	1	CONTROL GP-ENGINE ELECTRONIC
	256-0187	1	SOFTWARE GP-COMMUNICATION (LOCATED ON "ONEAGCO" OR CALL 507-847-7222)

[A] PART OF 216-0852;216-0874
CONTROL AR-COMMUNICATION

NOTIF
PR: t05i29k58b0089

HEATER GP-JACKET WATER-120V - 215-1802

MT835 & MT845
ROW & SPECIAL ONLY

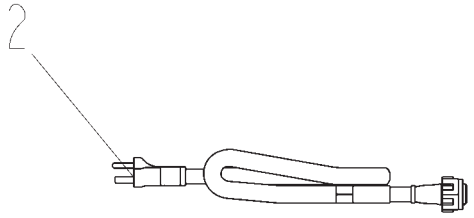

CORD ASY. STORED UNDER TRAINER SEAT

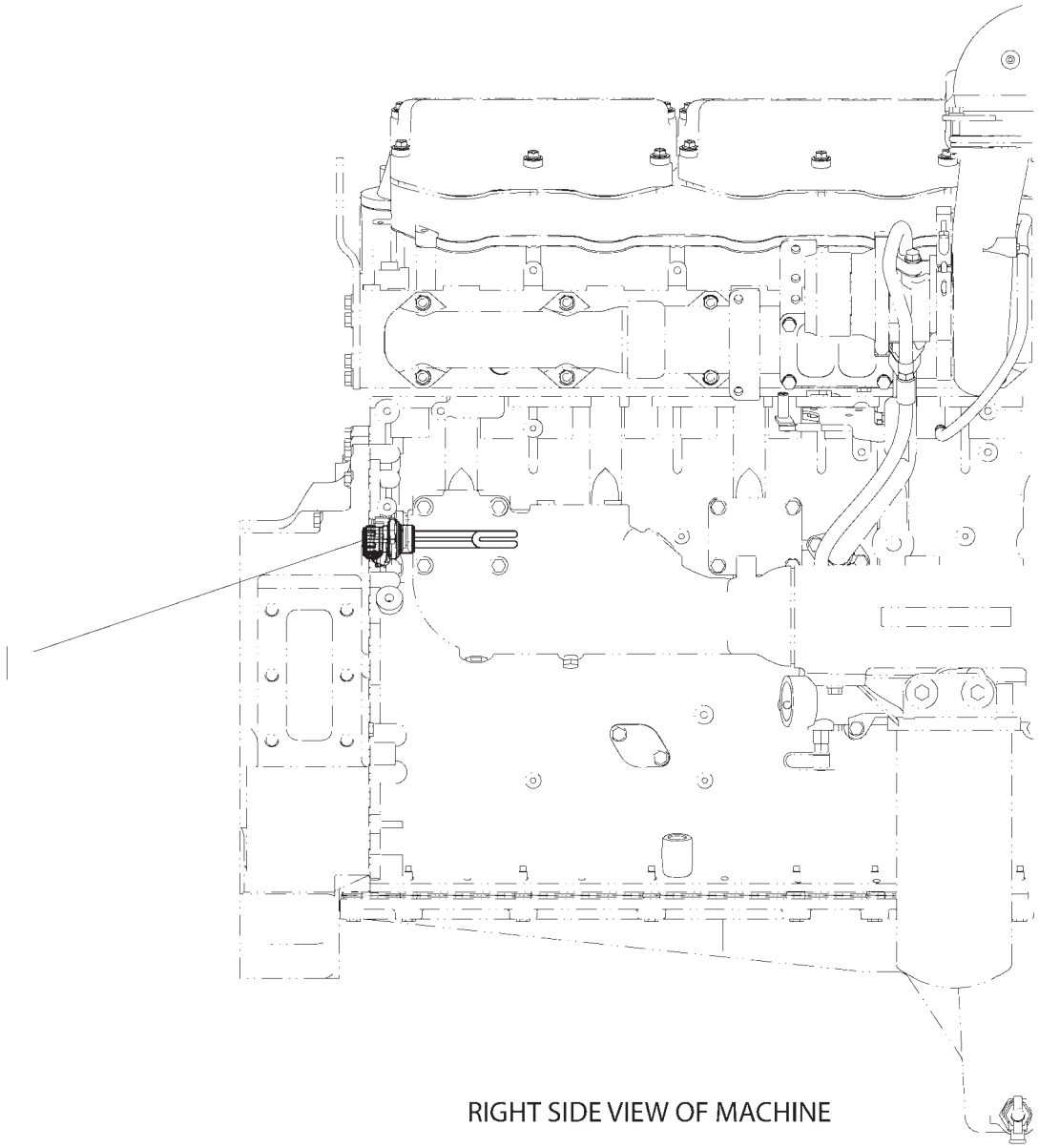

RIGHT SIDE VIEW OF MACHINE

2151807B

HEATER GP-JACKET WATER-120V - 215-1802

MT835 & MT845
ROW & SPECIAL ONLY

ITEM	NUMBER	QTY	DESCRIPTION
-	215-1802	--	HEATER GP-JACKET WATER (NOT SERVICED)
1	CH131-8627	1	ELEMENT ASM-HEATER (120V/1250W) (INCLS 1A)
1A	CH133-6517	1	CAP ASM-DUST
2	CH7X-6312	1	CORD ASM (120 VOLT/15 AMPERE)

2151807B
PR: t05i29k58b0090

HEATER GP-JACKET WATER-120V - 215-1807

MT855 & MT865
ROW & SPECIAL ONLY

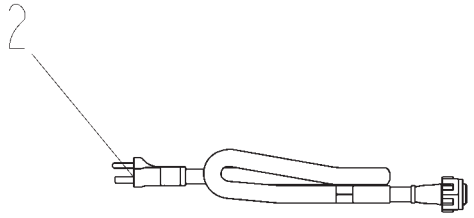

CORD ASY. STORED UNDER TRAINER SEAT

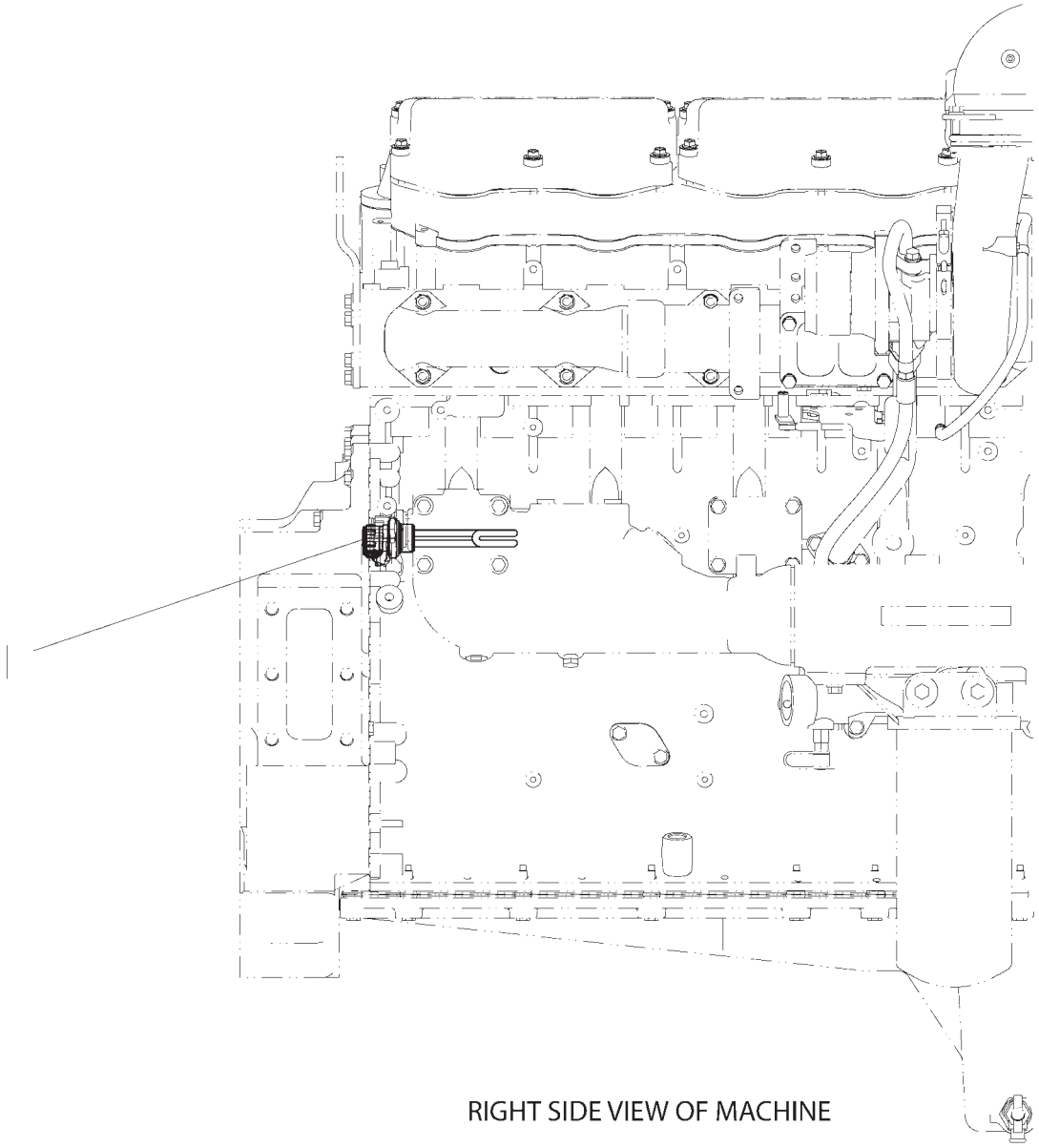

RIGHT SIDE VIEW OF MACHINE

2151807B

HEATER GP-JACKET WATER-120V - 215-1807

MT855 & MT865
ROW & SPECIAL ONLY

ITEM	NUMBER	QTY	DESCRIPTION
-	215-1807	--	HEATER GP-JACKET WATER (NOT SERVICED)
1	CH131-8627	1	ELEMENT ASM-HEATER (120V/1250W) (INCLS 1A)
1A	CH133-6517	1	CAP ASM-DUST
2	CH7X-6312	1	CORD ASM (120 VOLT/15 AMPERE)

2151807B
PR: t05i29k58b0091

HEATER GP-JACKET WATER-240V - 215-1808

MT835 & MT845
EAME ONLY

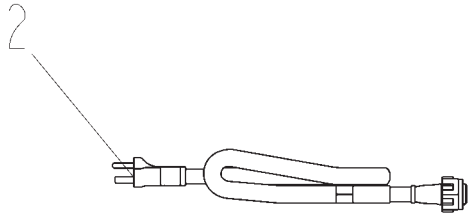

CORD ASY. STORED UNDER TRAINER SEAT

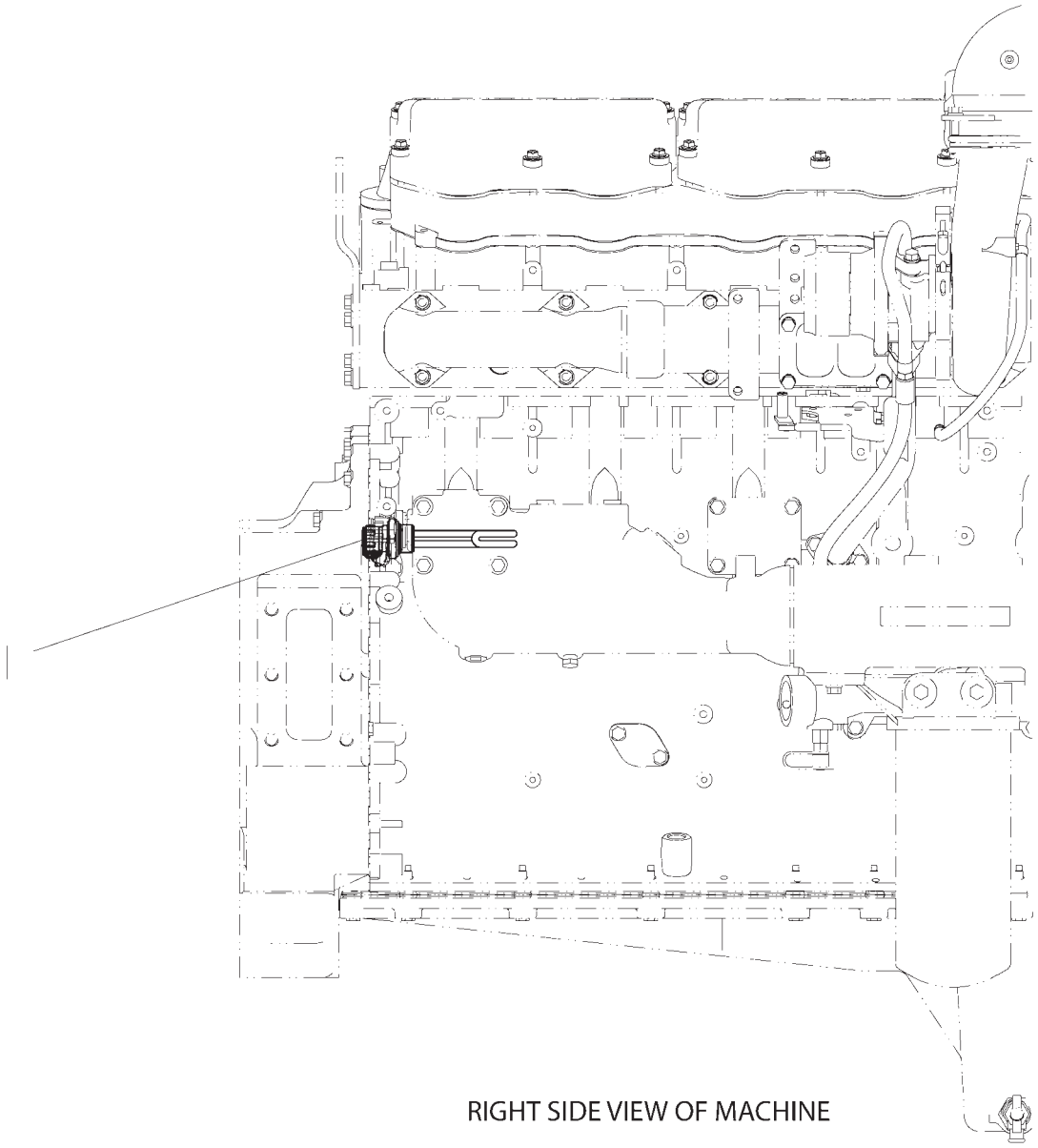

RIGHT SIDE VIEW OF MACHINE

2151807B

HEATER GP-JACKET WATER-240V - 215-1808

MT835 & MT845
EAME ONLY

ITEM	NUMBER	QTY	DESCRIPTION
-	215-1808	--	HEATER GP-JACKET WATER (NOT SERVICED)
1	CH154-2881	1	ELEMENT ASM-HEATER (240V/1250W) (INCLS 1A)
1A	CH133-6517	1	CAP ASM-DUST
2	CH127-8609	1	CORD ASM (240 VAC/15 AMP)

2151807B
PR: t05i29k58b0092

HEATER GP-JACKET WATER-240V - 215-1809

MT855 & MT865
EAME ONLY

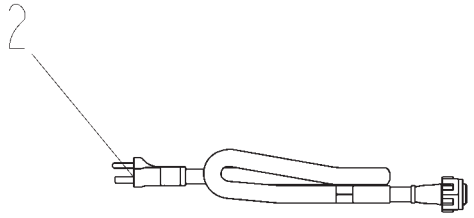

CORD ASY. STORED UNDER TRAINER SEAT

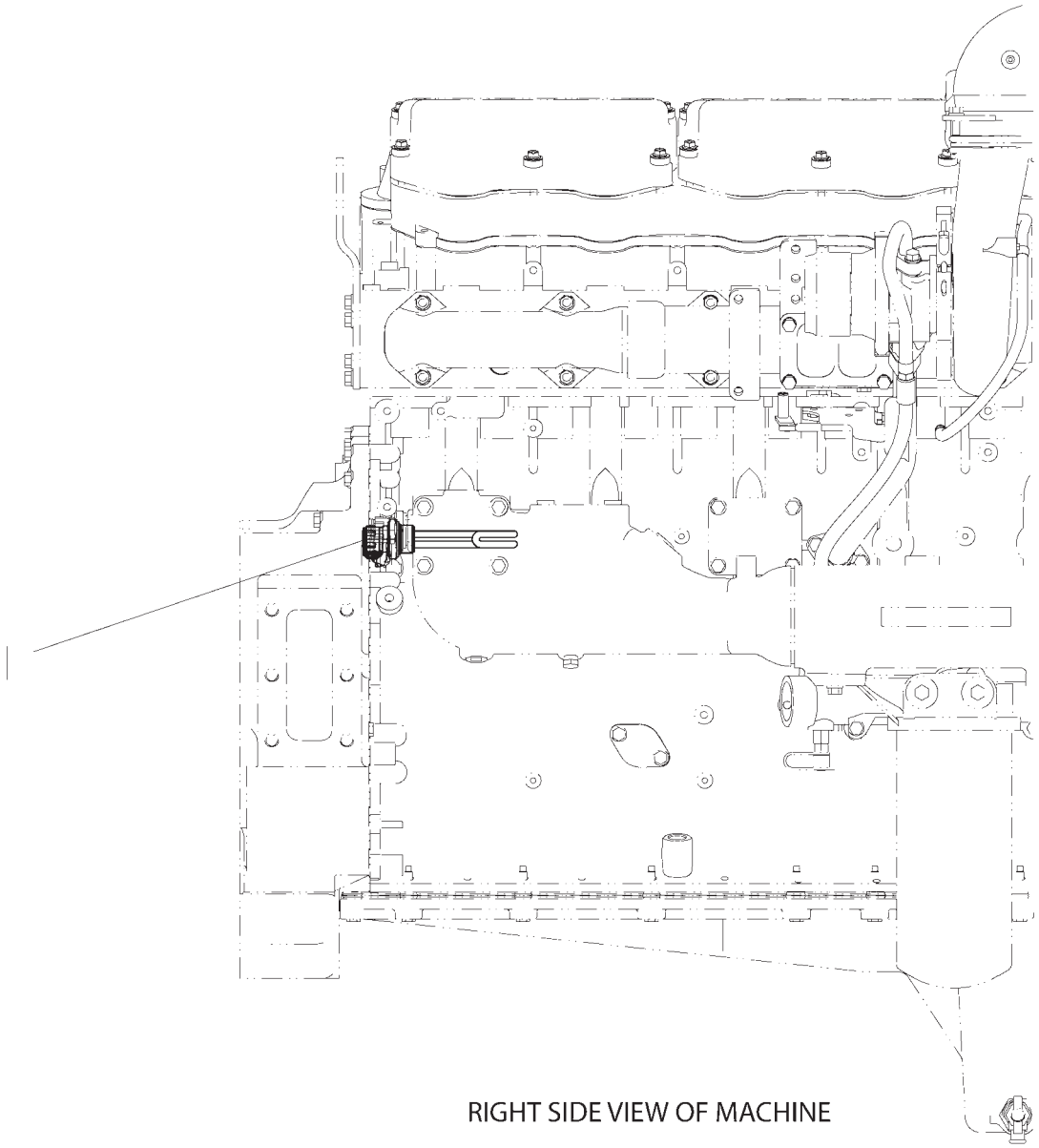

RIGHT SIDE VIEW OF MACHINE

2151807B

HEATER GP-JACKET WATER-240V - 215-1809

MT855 & MT865
EAME ONLY

ITEM	NUMBER	QTY	DESCRIPTION
-	215-1809	--	HEATER GP-JACKET WATER (NOT SERVICED)
1	CH154-2881	1	ELEMENT ASM-HEATER (240V/1250W) (INCLS 1A)
1A	CH133-6517	1	CAP ASM-DUST
2	CH127-8609	1	CORD ASM (240 VAC/15 AMP)

2151807B
PR: t05i29k58b0093

HEATER GP-TRANSMISSION-120V
163-0402
ROW & SPECIAL ONLY

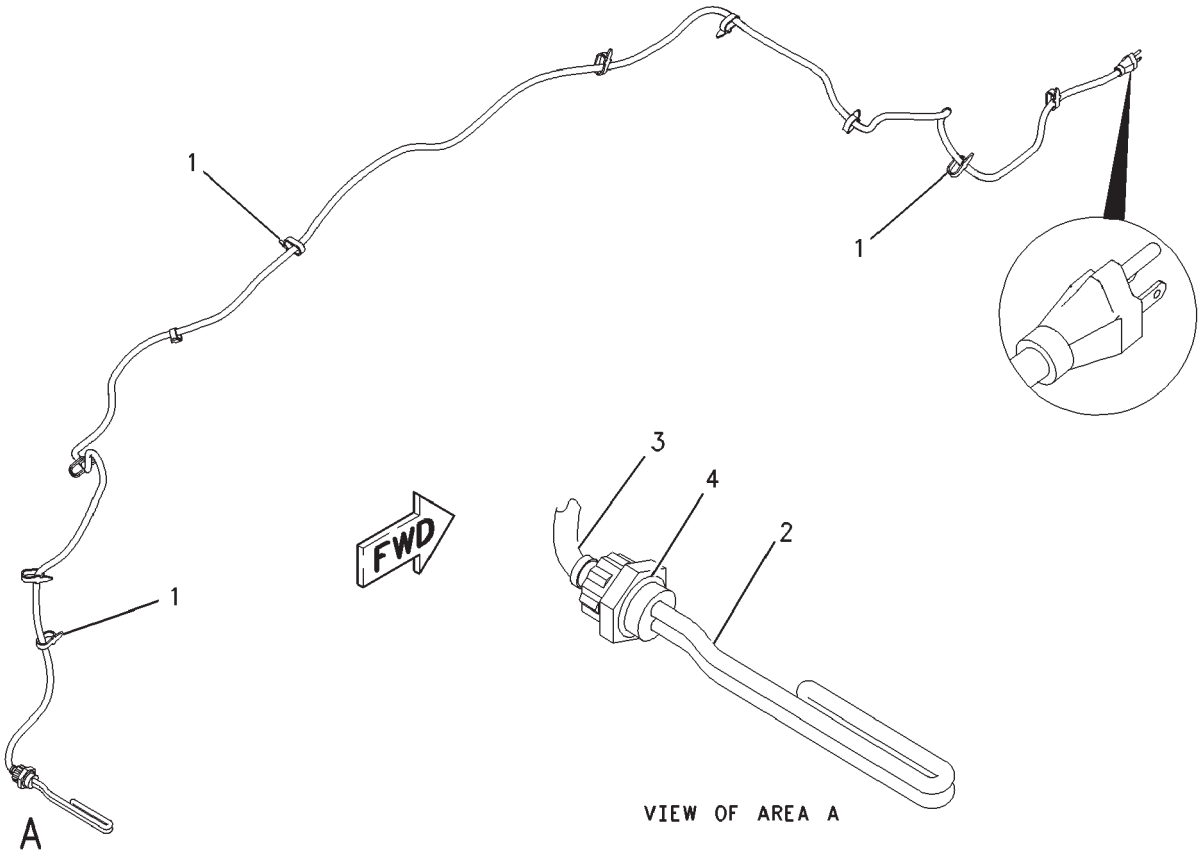

00851879

HEATER GP-TRANSMISSION-120V

163-0402
ROW & SPECIAL ONLY

ITEM	NUMBER	QTY	DESCRIPTION
-	163-0402	--	HEATER GP-TRANSMISSION (NOT SERVICED)
1	400837X1	10	STRAP-CABLE
2	205-8771	1	ELEMENT ASM (120 VOLT) (TRANSMISSION)
3	CH163-0421	1	CORD ASM
4	400593X1	1	SEAL-O-RING

00851879
PR: t05i29k58b0094

HEATER GP-TRANSMISSION-240V

163-0403
EAME ONLY

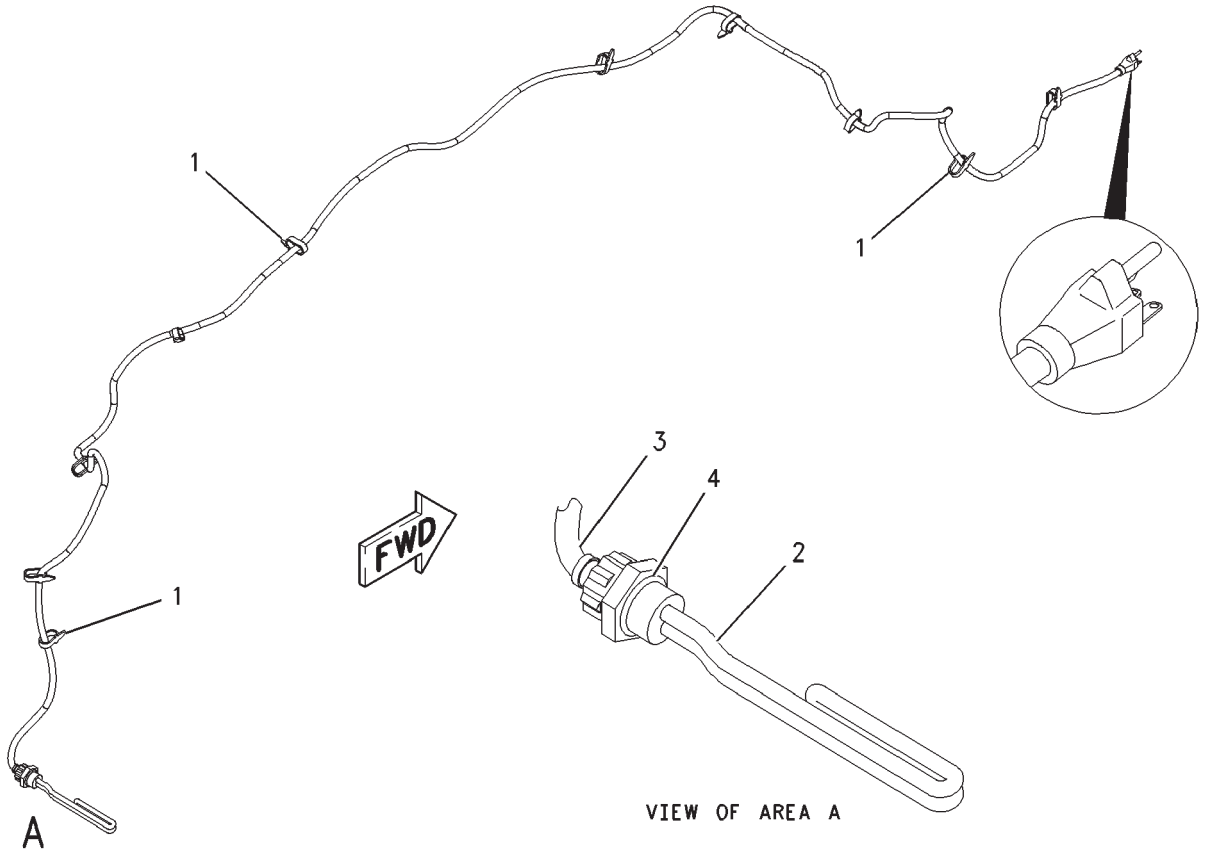

HEATER GP-TRANSMISSION-240V

163-0403
EAME ONLY

ITEM	NUMBER	QTY	DESCRIPTION
-	163-0403	--	HEATER GP-TRANSMISSION (NOT SERVICED)
1	400837X1	10	STRAP-CABLE
2	205-8772	1	ELEMENT ASM (240 VOLT) (TRANSMISSION HEATER)
3	CH213-1783	1	CORD ASM
4	400593X1	1	SEAL-O-RING

00856912
PR: t05i29k58b0095

LIGHT AS - COURTESY - 12V
501935D1

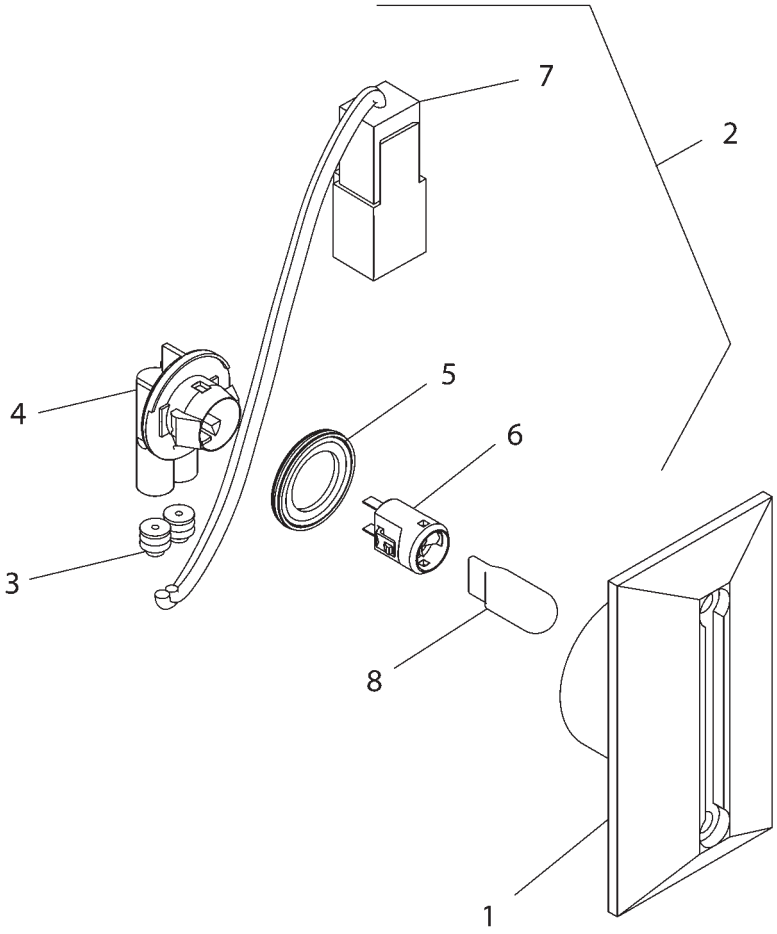

501935DB

LIGHT AS - COURTESY - 12V
501935D1

ITEM	NUMBER	QTY	DESCRIPTION
-	501935D1	--	LIGHT AS-COURTESY [A]
1	501936D1	1	HOUSING
2	501934D1	1	LAMP AS (INCLS 3-10)
3	400403X1	2	SEAL
4	400405X1	1	CONNECTOR
5	400406X1	1	SEAL
6	400407X1	1	LAMP SOCKET INSERT
7	501962D1	1	RECEPTACLE-CONN DEUTSCH 2 PIN
8	CH6T-7298	1	LAMP-12V BASE W-2 CLEAR
9	400404X1	2	SOCKET (NOT SHOWN)
10	400562X1	2	PIN-CONNECTOR 16-18 AWG (NOT SHOWN)

[A] PART OF 152-0005 WIRING GP

501935DB
PR: t05i29k58b0096

LIGHTING GP-12V STD - 500645D1
ROW AND SPECIAL APPLICATIONS

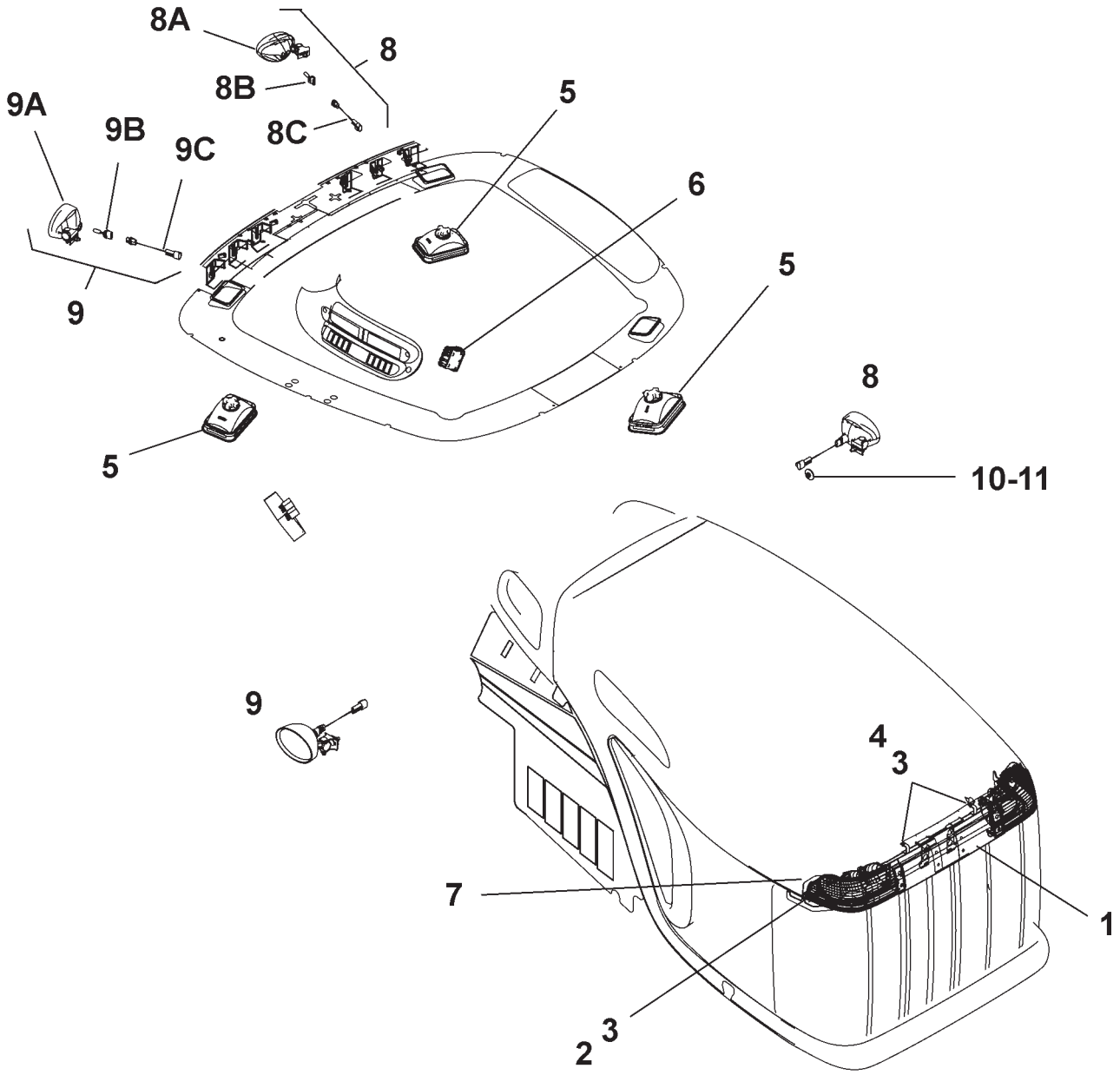

500645DD

LIGHTING GP-12V STD - 500645D1

ROW AND SPECIAL APPLICATIONS

ITEM	NUMBER	QTY	DESCRIPTION
-	500645D1	--	LIGHTING GP
1	500775D1	1	LAMP GP (HOOD) (NOT SERVICED)
			(SEE BREAKDOWN FOR COMPONENTS)
2	400230X1	2	BOLT-M6X1X14MM ZNDI HHD 10.9
3	CH8T-4205	4	WASHER-HARD 7.2IDX14.5ODX2MM
4	400300X1	2	NUT M6X1
5	166-4616	3	LAMP GP-PORCH (INCL BULB)
	CH136-5252	--	LAMP-MINIATURE
6	165-5973	1	SWITCH AS.-ROCKER
7	199-3481	1	SEAL-HOOD
8	500654D1	2	WORK LIGHT (LH) (OVAL)
8A	500676D2	1	LIGHT
8B	400862X1	1	BULB
8C	502094D1	1	HARNESS AS-JUMPER
9	500653D1	2	WORK LIGHT (RH) (OVAL)
9A	500676D2	1	LIGHT
9B	400862X1	1	BULB
9C	502094D1	1	HARNESS AS-JUMPER
10	CH156-0283	4	WASHER-HARD 8.4IDX35ODX2.5 MM
11	CH3E-9860	4	LOCKNUT-5/16-18 ZNDI

500645DD
PR: t05i29k58b0097

LIGHTING GP-12V DELUXE - 500646D1

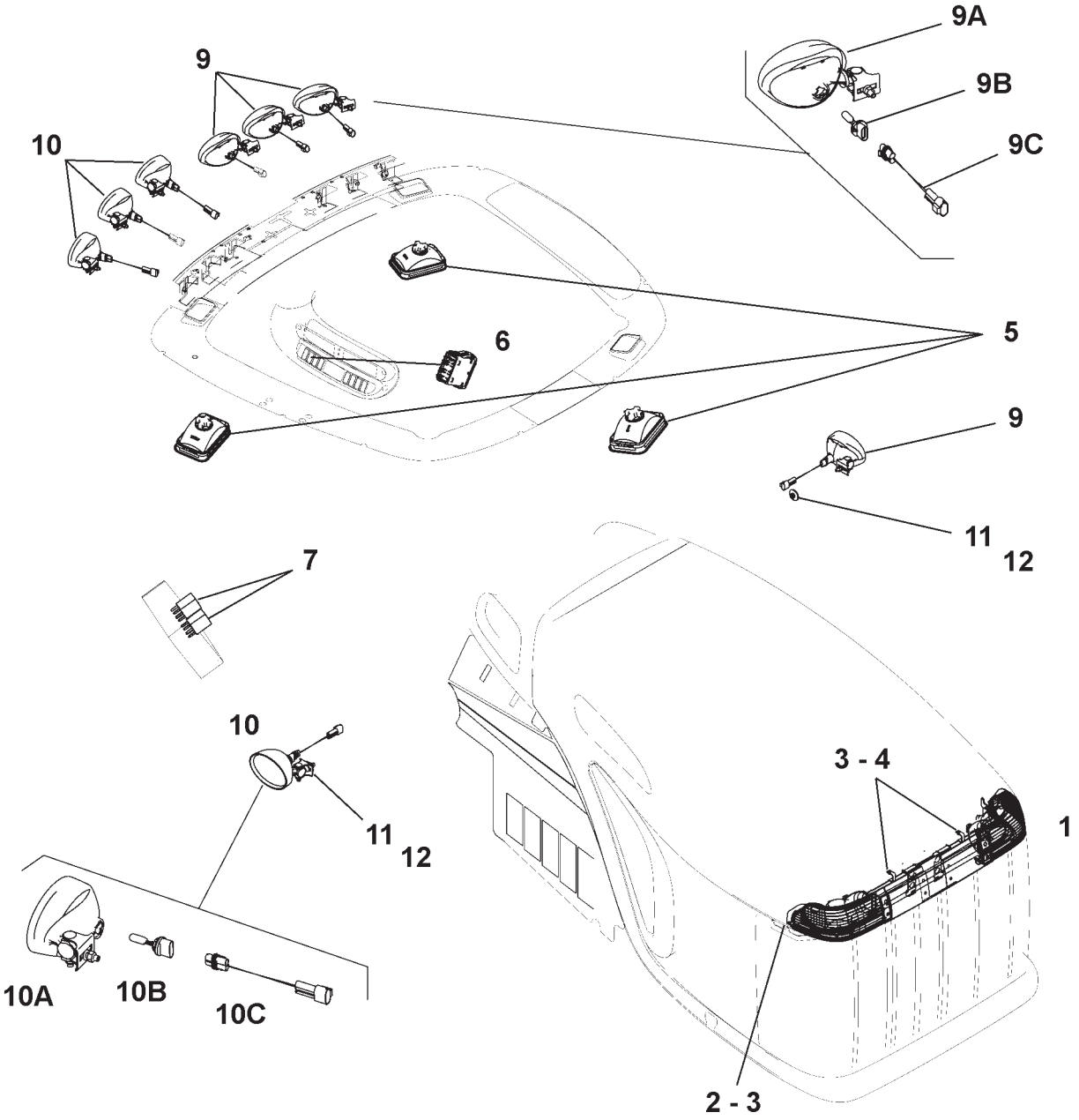

500646DD

LIGHTING GP-12V DELUXE - 500646D1

ITEM	NUMBER	QTY	DESCRIPTION
-	500646D1	--	LIGHTING GP (NOT SERVICED)
1	500775D1	1	LAMP GP (HOOD) (NOT SERVICED)
			(SEE BREAKDOWN FOR COMPONENTS)
2	400230X1	2	BOLT-M6X1X14MM ZNDI HHD 10.9
3	CH8T-4205	4	WASHER-HARD 7.2IDX14.5ODX2MM
4	400300X1	2	NUT M6X1
5	166-4616	3	LAMP GP-PORCH (INCL BULB)
	CH136-5252	--	LAMP-MINIATURE
6	165-5973	1	SWITCH AS.-ROCKER
7	CH146-9439	2	RELAY AS
8	199-3481	1	SEAL-HOOD (NOT SHOWN)
9	500654D1	4	WORK LIGHT (LH) (INCLS 9A-9C)
9A	500677D2	1	LIGHT
9B	400862X1	1	BULB
9C	502094D1	1	HARNESS AS-JUMPER
10	500653D1	4	WORK LIGHT (RH) (INCLS 10A-10C)
10A	500676D2	1	LIGHT
10B	400862X1	1	BULB
10C	502094D1	1	HARNESS AS-JUMPER
11	CH156-0283	8	WASHER-HARD 8.4IDX35ODX2.5 MM
12	CH3E-9860	8	LOCKNUT-5/16-18 ZNDI

500646DD
PR: t05i29k58b0098

LIGHTING GP-12V HID - 500647D1

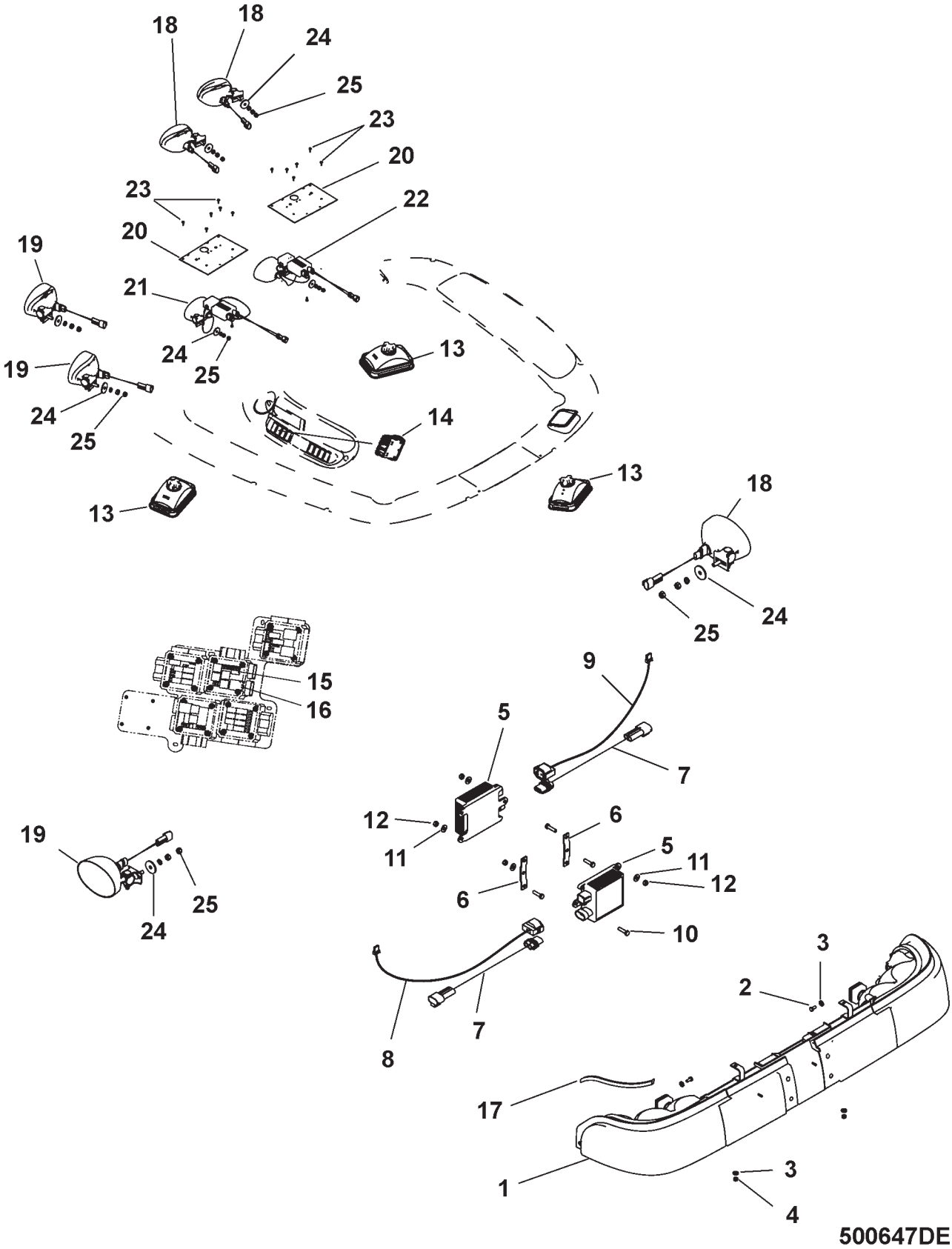

LIGHTING GP-12V HID - 500647D1

ITEM	NUMBER	QTY	DESCRIPTION
-	500647D1	--	LIGHTING GP (HID)
1	500776D1	1	LAMP GP (HOOD) (SEE BREAKDOWN FOR COMPONENTS)
2	400230X1	2	BOLT-M6X1X14MM ZNDI HHD 10.9
3	CH8T-4205	4	WASHER-HARD 7.2IDX14.5ODX2MM
4	400300X1	2	NUT M6X1
5	136-5597	2	BALLAST AS.-HID
6	136-5509	2	BRACKET-BALLAST
7	502177D1	2	HARNESS AS.-BALLAST
8	202-7320	1	HARNESS AS.-HID
9	202-7320	1	HARNESS AS.-HID
10	400211X1	6	BOLT-M5X0.8-6GX20 ZN HHD 8.8
11	CH4B-4274	6	WASHER-5.5IDX13ODX1.2MM
12	CH5C-2874	6	NUT-M5X0.8THD HEX ZNDI
13	166-4616	3	LAMP GP-PORCH
	CH136-5252	--	LAMP-MINIATURE
14	165-5973	1	SWITCH AS.-ROCKER
15	CH146-9439	1	RELAY AS.
16	CH170-2237	1	RELAY AS.-12 VDC
17	199-3481	1	SEAL-HOOD
18	500654D1	3	WORK LIGHT (LH)
	500676D2	1	LIGHT
	400862X1	1	BULB
	502094D1	1	HARNESS AS-JUMPER
19	500653D1	3	WORK LIGHT (RH)
	500677D2	1	LIGHT
	400862X1	1	BULB
	502094D1	1	HARNESS AS-JUMPER
20	500639D1	2	BRACKET, HID BALLAST
21	500634D1	1	WORK LIGHT-HID (RH) (SEE BREAKDOWN FOR COMPONENTS)
22	500635D1	1	WORK LIGHT-HID (LH) (SEE BREAKDOWN FOR COMPONENTS)
23	CH119-5026	14	SCREW-#10-16X16MM PAN THD CTG
24	CH156-0283	8	WASHER-HARD 8.4IDX35ODX2.5MM
25	CH3E-9860	8	LOCKNUT-5/16-18 ZNDI

500647DE
PR: t05i29k58b0099

KIT-LIGHTING - 500650D1

CONVERT STD TO DELUXE
ROW AND SPECIAL APPLICATIONS

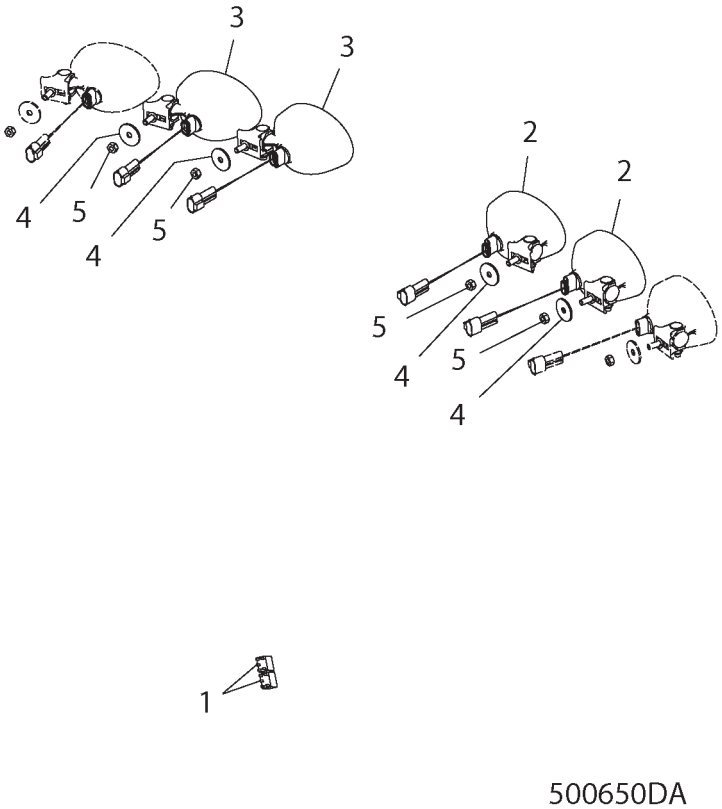

KIT-LIGHTING - 500650D1

CONVERT STD TO DELUXE ROW AND SPECIAL APPLICATIONS

ITEM	NUMBER	QTY	DESCRIPTION
-	500650D1	--	LIGHTING GP
1	CH146-9439	2	RELAY AS.
2	500654D1	2	WORK LIGHT (LH) (OVAL)
	500676D2	1	LIGHT
	400862X1	1	BULB
	502094D1	1	HARNESS AS-JUMPER
3	500653D1	2	WORK LIGHT (RH) (OVAL)
	500676D2	1	LIGHT
	400862X1	1	BULB
	502094D1	1	HARNESS AS-JUMPER
4	CH156-0283	4	WASHER-HARD 8.4IDX35ODX2.5 MM
5	CH3E-9860	4	LOCKNUT-5/16-18 ZNDI

500650DA
PR: t05i29k58b0100

KIT-LIGHTING - 500651D1

CONVERT STD TO HID
ROW AND SPECIAL APPLICATIONS

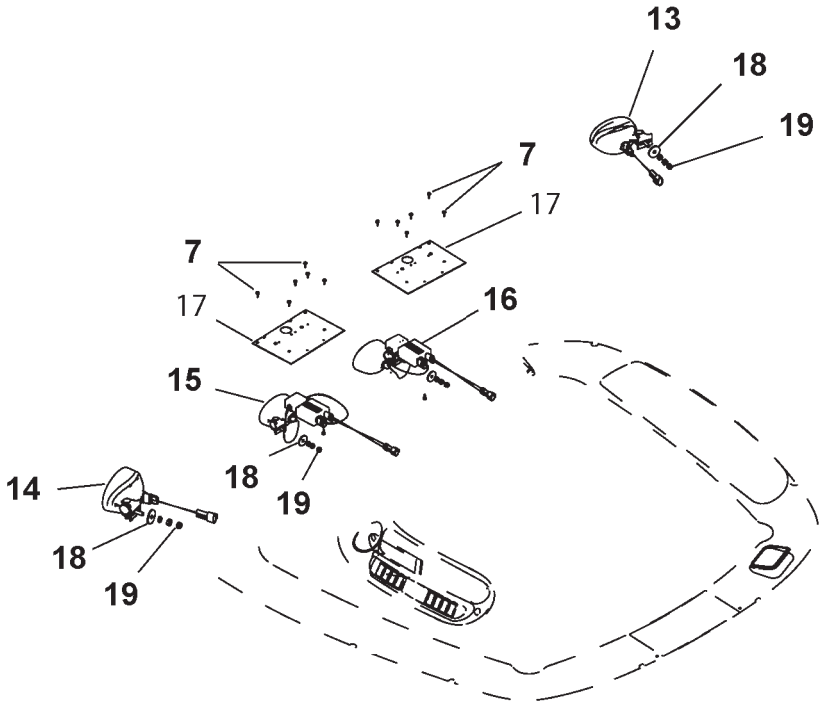

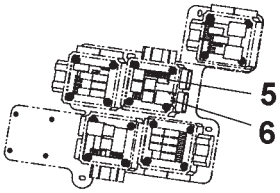

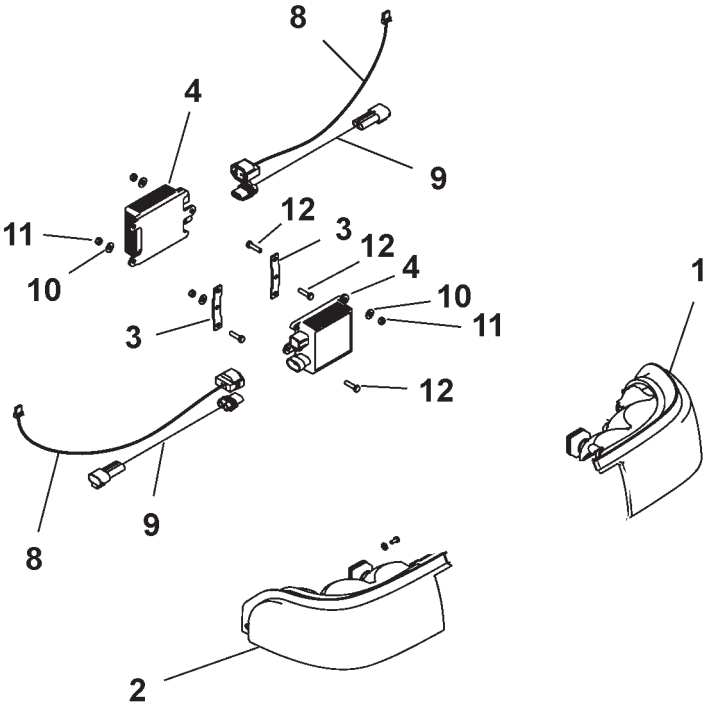

500651DA

KIT-LIGHTING - 500651D1

CONVERT STD TO HID
ROW AND SPECIAL APPLICATIONS

ITEM	NUMBER	QTY	DESCRIPTION
-	500651D1	--	KIT-LIGHTING (STD TO HID)
1	136-5288	1	HEADLAMP AS-HID (LH)
	136-5598	1	LAMP (12V)(35 WATT)
	CH175-1323	2	LAMP (12V)(55 WATT)
2	136-5289	1	HEADLAMP AS-HID (RH)
	136-5598	1	LAMP (12V)(35 WATT)
	CH175-1323	2	LAMP (12V)(55 WATT)
3	136-5509	2	BRACKET-BALLAST
4	136-5597	2	BALLAST AS-HID
5	CH146-9439	1	RELAY AS.
6	CH170-2237	1	RELAY AS.-12 VDC
7	CH119-5026	12	SCREW-#10-16X16MM PAN THD CTG
8	202-7320	2	HARNESS AS-HID
9	502177D1	2	HARNESS AS-BALLAST
10	CH4B-4274	6	WASHER-5.5IDX13ODX1.2MM
11	CH5C-2874	6	NUT-M5X0.8THD HEX ZNDI
12	400211X1	6	BOLT-M5X0.8-6GX20 ZN HHD 8.8
13	500654D1	1	WORK LIGHT (LH)
	500676D2	1	LIGHT
	400862X1	1	BULB
	502094D1	1	HARNESS AS-JUMPER
14	500653D1	1	WORK LIGHT (RH)
	500676D2	1	LIGHT
	400862X1	1	BULB
	502094D1	1	HARNESS AS-JUMPER
15	500634D1	1	WORK LIGHT-HID (RH) (SEE BREAKDOWN FOR COMPONENTS)
16	500635D1	1	WORK LIGHT-HID (LH) (SEE BREAKDOWN FOR COMPONENTS)
17	500639D1	2	BRACKET, HID BALLAST
18	CH156-0283	4	WASHER-HARD 8.4IDX35ODX2.5 MM
19	CH3E-9860	4	LOCKNUT-5/16-18 ZNDI

500651DA
PR: t05i29k58b0101

KIT-LIGHTING - 500652D1

CONVERT DELUXE TO HID
ROW AND SPECIAL APPLICATIONS

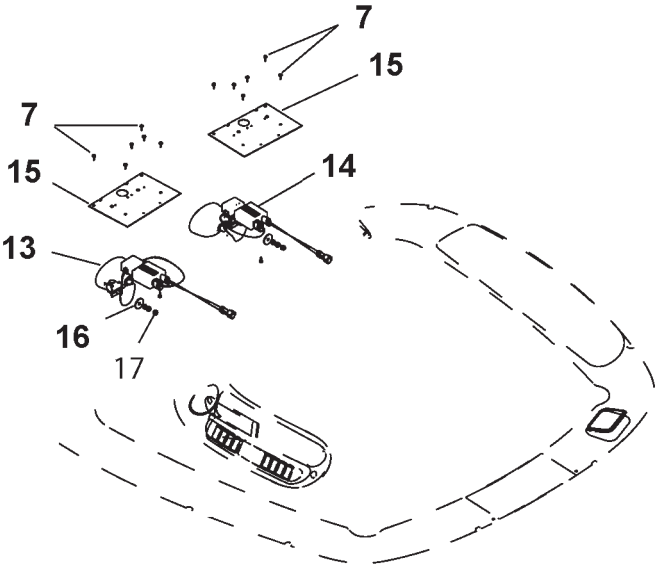

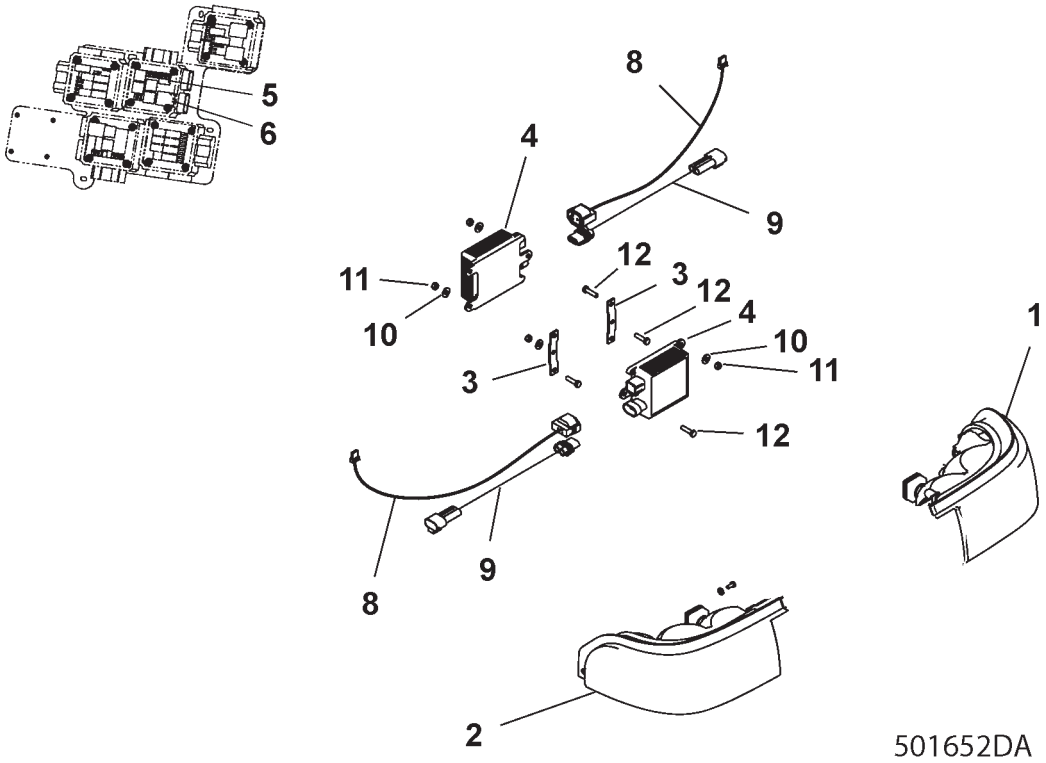

KIT-LIGHTING - 500652D1

CONVERT DELUXE TO HID ROW AND SPECIAL APPLICATIONS

ITEM	NUMBER	QTY	DESCRIPTION
-	500652D1	--	KIT-LIGHTING (DLX TO HID)
1	136-5288	1	HEADLAMP AS-HID (LH)
	136-5598	1	LAMP (12V)(35 WATT)
	CH175-1323	2	LAMP (12V)(55 WATT)
2	136-5289	1	HEADLAMP AS-HID (RH)
	136-5598	1	LAMP (12V)(35 WATT)
	CH175-1323	2	LAMP (12V)(55 WATT)
3	136-5509	2	BRACKET-BALLAST
4	136-5597	2	BALLAST AS-HID
5	CH146-9439	1	RELAY AS.
6	CH170-2237	1	RELAY AS.-12 VDC
7	CH119-5026	12	SCREW-#10-16X16MM PAN THD CTG
8	202-7320	2	HARNESS AS-HID
9	502177D1	2	HARNESS AS-BALLAST
10	CH4B-4274	6	WASHER-5.5IDX13ODX1.2MM
11	CH5C-2874	6	NUT-M5X0.8THD HEX ZNDI
12	400211X1	6	BOLT-M5X0.8-6GX20 ZN HHD 8.8
13	500634D1	1	WORK LIGHT-HID (RH) (SEE BREAKDOWN FOR COMPONENTS)
14	500635D1	1	WORK LIGHT-HID (LH) (SEE BREAKDOWN FOR COMPONENTS)
15	500639D1	2	BRACKET, HID BALLAST
16	CH156-0283	2	WASHER-HARD 8.4IDX35ODX2.5 MM
17	CH3E-9860	2	LOCKNUT-5/16-18 ZNDI

500652DA
PR: t05i29k58b0102

LAMP GP-HOOD - 12V HALOGEN
500775D1

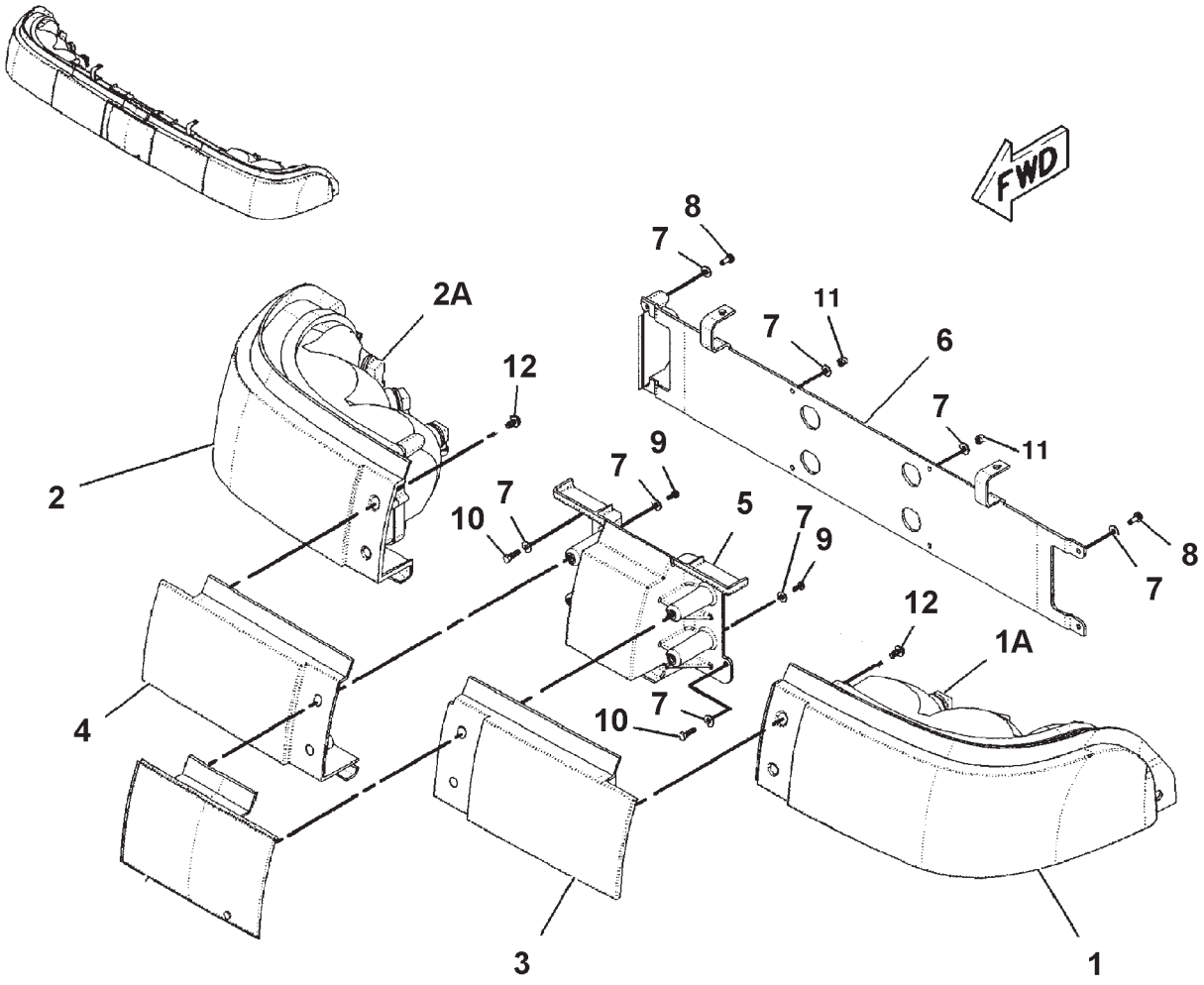

500775DB

LAMP GP-HOOD - 12V HALOGEN
500775D1

ITEM	NUMBER	QTY	DESCRIPTION
-	500775D1	--	LAMP GP-HOOD [A] (NOT SERVICED)
			(SERVICED BY COMPONENTS)
1	176-0379	1	HEADLAMP AS.-LH
1A	CH175-1323	3	LAMP (12 VOLT)(55 WATT)
2	176-0380	1	HEADLAMP AS.-RH
2A	CH175-1323	3	LAMP (12 VOLT)(55 WATT)
3	215-7684	1	PANEL-LH (HEADLIGHT)
4	215-7687	1	PANEL-RH (HEADLIGHT)
5	210-4354	1	BRACKET-HEADLIGHT
6	215-9809	1	BRACKET-HEADLIGHT
7	CH4B-4274	16	WASHER-5.5IDX13ODX1.2MM
8	400087X1	4	SCREW-#10-16X12.7 PAN,THD CTG
9	CH6V-5210	4	SCREW-PAN M4X0.7X10 CROSS
10	400021X1	4	BOLT-M5X0.8-6GX16MM ZN HHD
11	CH3T-0851	4	NUT-LOCK M5X0.8
12	CH217-5909	4	SCREW-NO10-15X12.7 PAN THD CTG

[A] PART OF 500645D1 & 500646D1
LIGHTING GROUPS

500775DB
PR: t05i29k58b0103

LAMP GP-HOOD-12V HID
500776D1

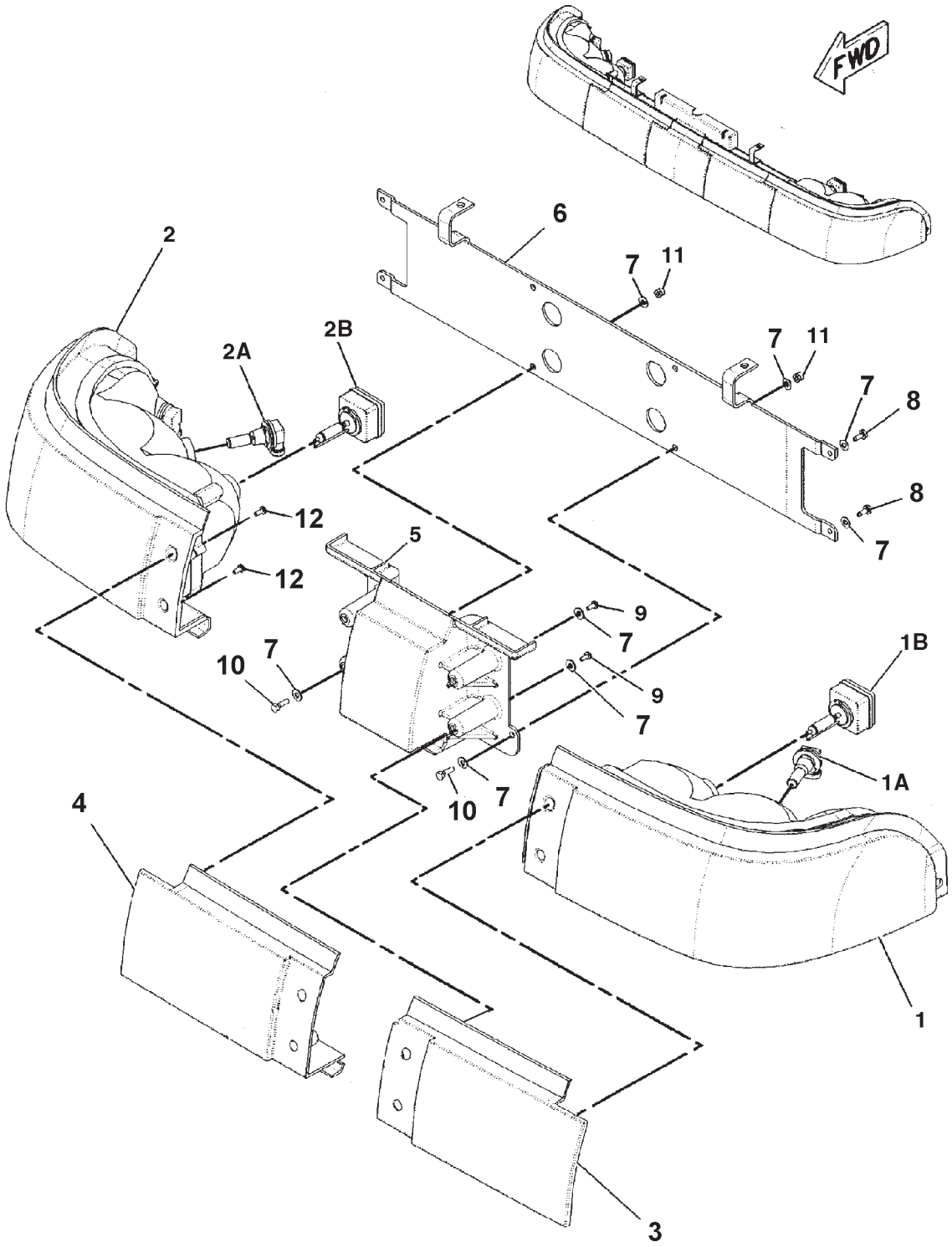

500776DB

LAMP GP-HOOD-12V HID
500776D1

ITEM	NUMBER	QTY	DESCRIPTION
-	500776D1	--	LAMP GP-HOOD [A] (SERVICE BY COMPONENTS)
1	136-5288	1	LAMP GP-HEAD (LH) (INCLS 1A & 1B)
1A	136-5598	1	LAMP (12V)(35 WATT)
1B	CH175-1323	2	LAMP (12V)(55 WATT)
2	136-5289	1	LAMP GP-HEAD (RH) (INCLS 2A & 2B)
2A	136-5598	1	LAMP (12V)(35 WATT)
2B	CH175-1323	2	LAMP (12V)(55 WATT)
3	215-7684	1	PANEL-LH (HEADLIGHT)
4	215-7687	1	PANEL-RH (HEADLIGHT)
5	210-4354	1	BRACKET-HEADLIGHT
6	215-9809	1	BRACKET-HEADLIGHT
7	CH4B-4274	16	WASHER-5.5IDX13ODX1.2MM
8	400087X1	4	SCREW-#10-16X12.7 PAN,THD CTG
9	CH6V-5210	4	SCREW-PAN M4X0.7X10 CROSS
10	400021X1	4	BOLT-M5X0.8-6GX16MM ZN HHD
11	CH3T-0851	4	NUT-LOCK M5X0.8
12	CH217-5909	4	SCREW-NO10-15X12.7 PAN THD CTG

[A] PART OF 500647D1 LIGHTING GROUP-HID

500776DB
PR: t05i29k58b0104

WORK LIGHT-HID
500634D1 & 500635D1

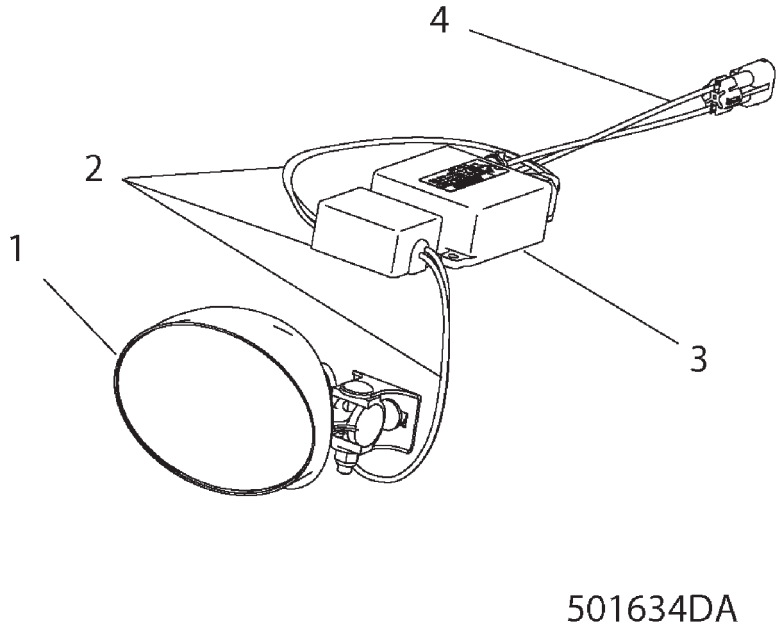

WORK LIGHT-HID
500634D1 & 500635D1

ITEM	NUMBER	QTY	DESCRIPTION
-	500634D1	--	WORK LIGHT-RH [A] (SHOWN)
-	500635D1	--	WORK LIGHT-LH [A] (NOT SHOWN)
1	500676D1	1	WORK LIGHT (RH) (SHOWN)
	500677D1	1	WORK LIGHT (LH) (NOT SHOWN)
2	500638D1	1	HARNESS AS
3	500637D1	1	BALLAST AS.-HID
4	500674D1	1	HARNESS AS

[A] PART OF 500647D1 LIGHTING GROUP-HID

500634DA
PR: t05i29k58b0105

LIGHTING GP-SIGNAL - 12V
136-5665

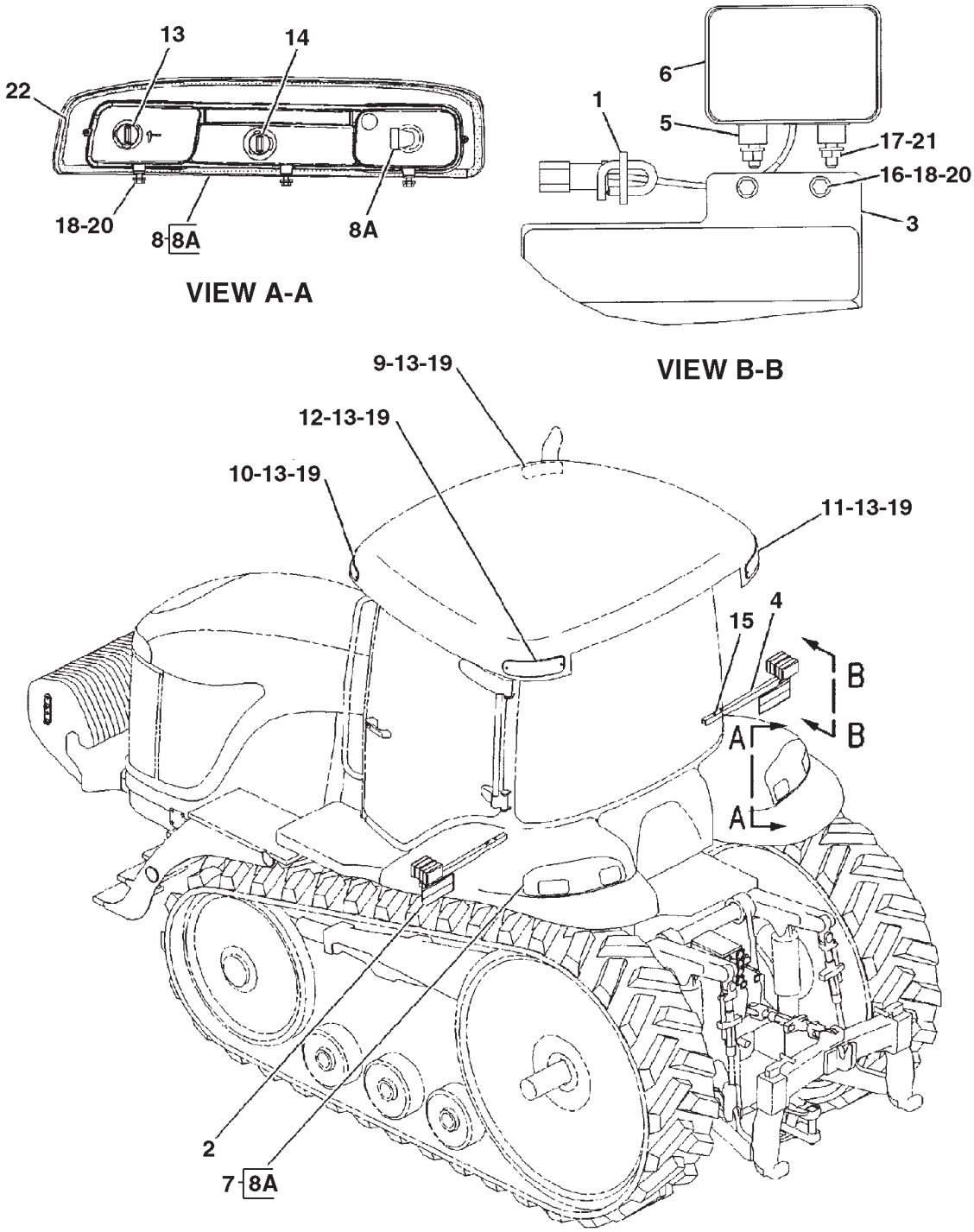

0886924A

LIGHTING GP-SIGNAL - 12V
136-5665

ITEM	NUMBER	QTY	DESCRIPTION
-	136-5665	--	LIGHTING GP-SIGNAL [A] (NOT SERVICED)
1	CH7K-1181	2	STRAP-CABLE
2	136-5441	1	PLATE ASM-LH (INCLUDES PLATE AND FILM)
	192-5642	1	FILM-RED
	192-5643	1	FILM-YELLOW
	192-5644	1	FILM-ORANGE
3	136-5476	1	PLATE ASM-RH (INCLUDES PLATE AND FILM)
	192-5642	1	FILM-RED
	192-5643	1	FILM-YELLOW
	192-5644	1	FILM-ORANGE
4	142-9677	2	EXTENSION ASM
			(INCLUDED LINK, NUT AND BRACKET)
	CH7T-1099	2	LINK
	CH8T-3612	2	NUT-WELD (M8X1.25)
5	CH148-7017	4	SPACER (10.2X19.05X13)
6	155-0027	2	LAMP GP (TURN SIGNAL)
			(INCLUDES BODY-LAMP)
			(SERVICE REPAIR ORDER THE FOLLOWING
			6A, 6B, 6C AND 6D)
6A	5M-8034	2	LAMP (12 VOLT) (TURN SIGNAL)
6B	186-3735	2	PIN-CONNECTOR
6C	102-8804	1	KIT-RECEPTACLE (4 PIN)
			(INCLUDES RECEPTACLE ASM AND WEDGE)
			(SERVICED AS COMPLETE KIT ONLY)
6D	155-0029	2	LENS (AMBER) (TURN SIGNAL)
7	162-4091	1	LAMP GP-SIGNAL (FENDER)(LH)
			(SERVICE REPAIR BULB ORDER 8A)
8	162-4092	1	LAMP GP-SIGNAL (FENDER)(RH)
			(SERVICE REPAIR BULB ORDER 8A)
8A	500678D1	1	LAMP (12 VOLT)(50 WATT) (FENDER)
9	162-6696	1	LAMP (ROOF-FRONT RH)
10	162-6697	1	LAMP (ROOF-FRONT LH)
11	162-6698	1	LAMP (ROOF-REAR RH)
12	162-6699	1	LAMP (ROOF-REAR LH)
13	171-9687	6	LAMP (12 VOLT)(SINGLE FILAMENT)
14	171-9688	2	LAMP (12 VOLT)(DOUBLE FILAMENT)
15	400300X1	4	NUT (M6X1)
16	400340X1	4	NUT (M8X1.25)
17	CH188-9644	4	SCREW-FLAT HEAD
18	400152X1	10	BOLT (M6X1X16MM)
19	CH8T-0337	8	SCREW-MACHINE (M4X0.7X12MM)
20	CH8T-4205	14	WASHER-HARD (7.2X14.5X2MM)
21	400339X1	4	WASHER-HARD (8.8X16X2)
22	CH200-6208	AR	SEAL (9.5X4.7 ADH BACK) (274CM)

[A] PART OF 179-1952 BASE COMMON AR

LIGHTING GP-SIGNAL - 216-0806

EAME ONLY

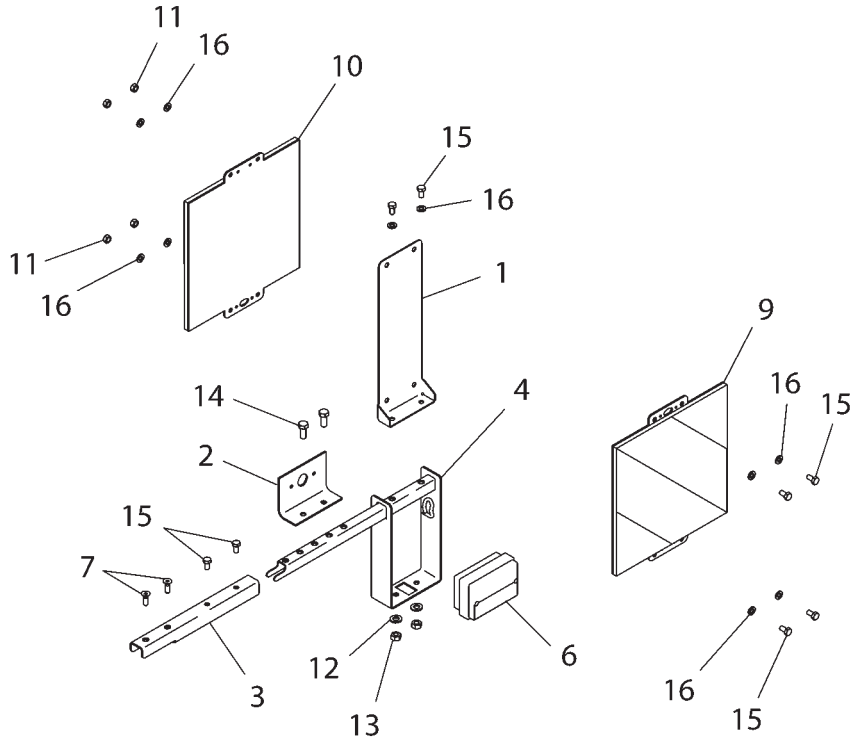

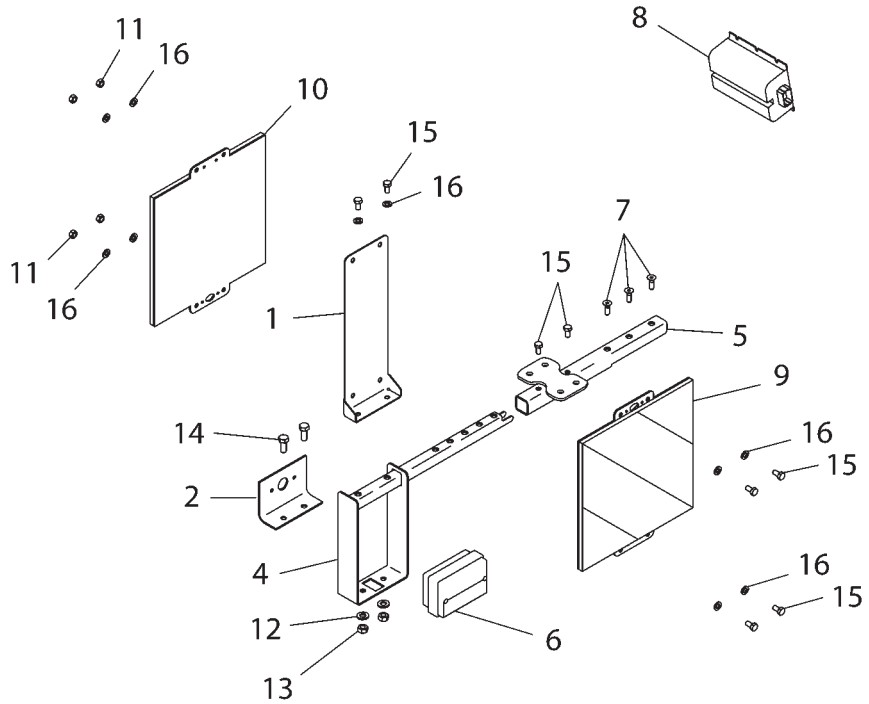

2160806G

LIGHTING GP-SIGNAL - 216-0806

EAME ONLY

ITEM	NUMBER	QTY	DESCRIPTION
-	216-0806	--	LIGHTING GP-SIGNAL
1	206-7524	2	BRACKET
2	215-9109	2	BRACKET
3	216-0887	1	TUBE-EXTENSION
4	216-4353	2	BRACKET AS.
5	221-9201	1	TUBE AS-EXTENSION
6	155-0020	2	LIGHT AS.-EXTREMITY
7	CH188-9644	4	SCREW-M8X1.25X25MM FLAT HSHD
8	CH215-1382	1	FLASHER-SOLID STATE-12 VDC
9	500529D1	2	PLATE-WARNING (EAME)
10	500530D1	2	PLATE-WARNING (EAME)
11	400340X1	8	NUT-M8X1.25X13 HEX ZND1
12	400287X1	4	WASHER-HARD 11IDX21ODX2.5 ZND1
13	WR522218	4	NUT-M10-1.5,CL10.9,ZN,H,REG
14	400039X1	4	BOLT-M10X1.5X25 ZNDI HHD 10.9
15	400227X1	16	BOLT-M8X1.25X16 ZNDI HHD 10.9
16	400339X1	20	WASHER-HARD

2160806G
PR: t05i29k58b0107

LIGHTING GP-SIGNAL - 136-5429

EAME ONLY

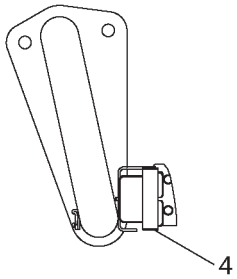

DETAIL E

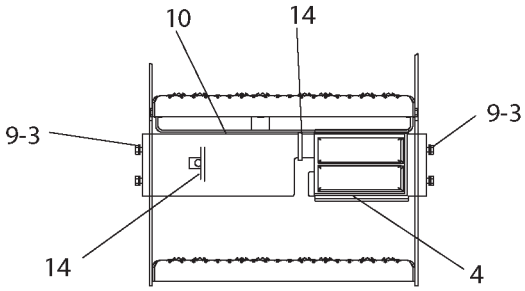

VIEW D-D

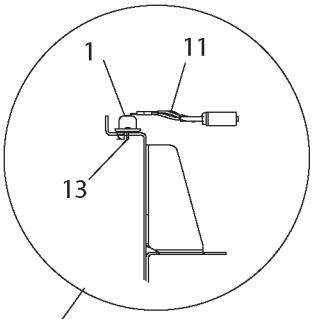

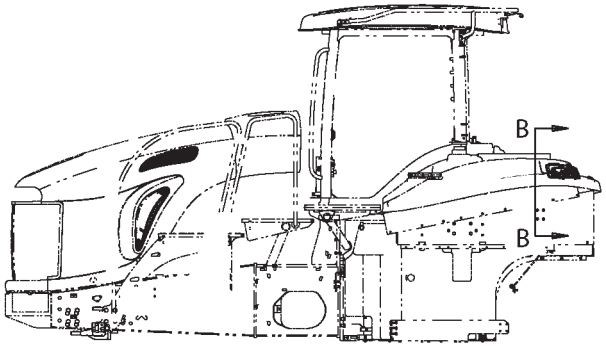

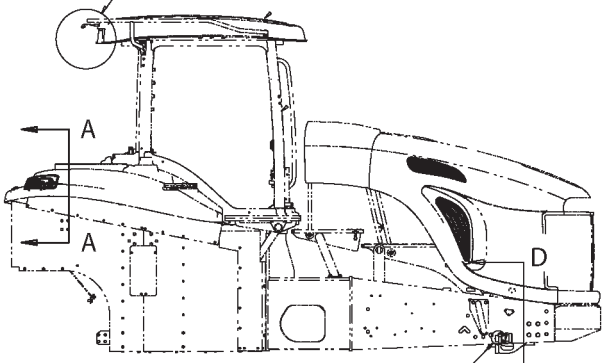

SEE DETAIL E

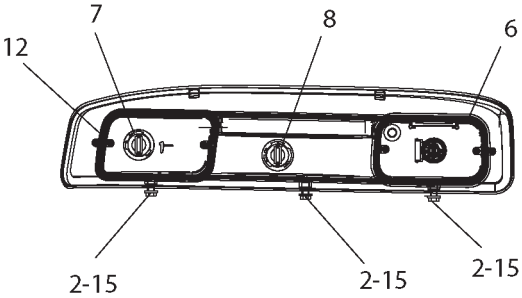

VIEW A-A

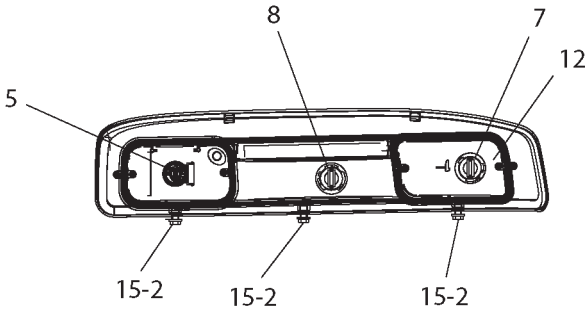

VIEW B-B

1365429A

LIGHTING GP-SIGNAL - 136-5429

EAME ONLY

ITEM	NUMBER	QTY	DESCRIPTION
-	136-5429	--	LIGHTING GP-SIGNAL [A] (NOT SERVICED)
1	222-9156	2	LAMP AS
2	400152X1	6	BOLT-M6X1X16MM ZNDI HHD 10.9
3	400221X1	4	BOLT-M6X1X20MM ZNDI HHD 10.9
4	155-0014	2	LIGHT AS-EXTREMITY
5	162-4091	1	LAMP AS-FENDER (LH)
	400864X1	1	BULB (12V-50W)
6	162-4092	1	LAMP AS-FENDER (RH)
	400864X1	1	BULB (12V-50W)
7	171-9687	2	BULB-12V (S8)
8	171-9688	2	BULB-12V (S8)
9	400310X1	4	WASHER
10	502072D1	1	BRACKET AS
11	502245D1	1	HARNESS AS.
12	CH200-6208	--	SEAL BULK 9.5X4.7 ADH BACKING (274CM)
13	CH3S-9557	4	SCREW-PAN 4-40 THD X12.7 CROSS
14	CH7K-1181	2	STRAP-CABLE 0.19-4.00
15	CH8T-4205	6	WASHER-HARD 7.2IDX14.5ODX2MM

[A] PART OF 179-2180 BASE COMMON AR

1365429A
PR: t05i29k58b0108

LIGHTING GP-WARNING - 216-9823

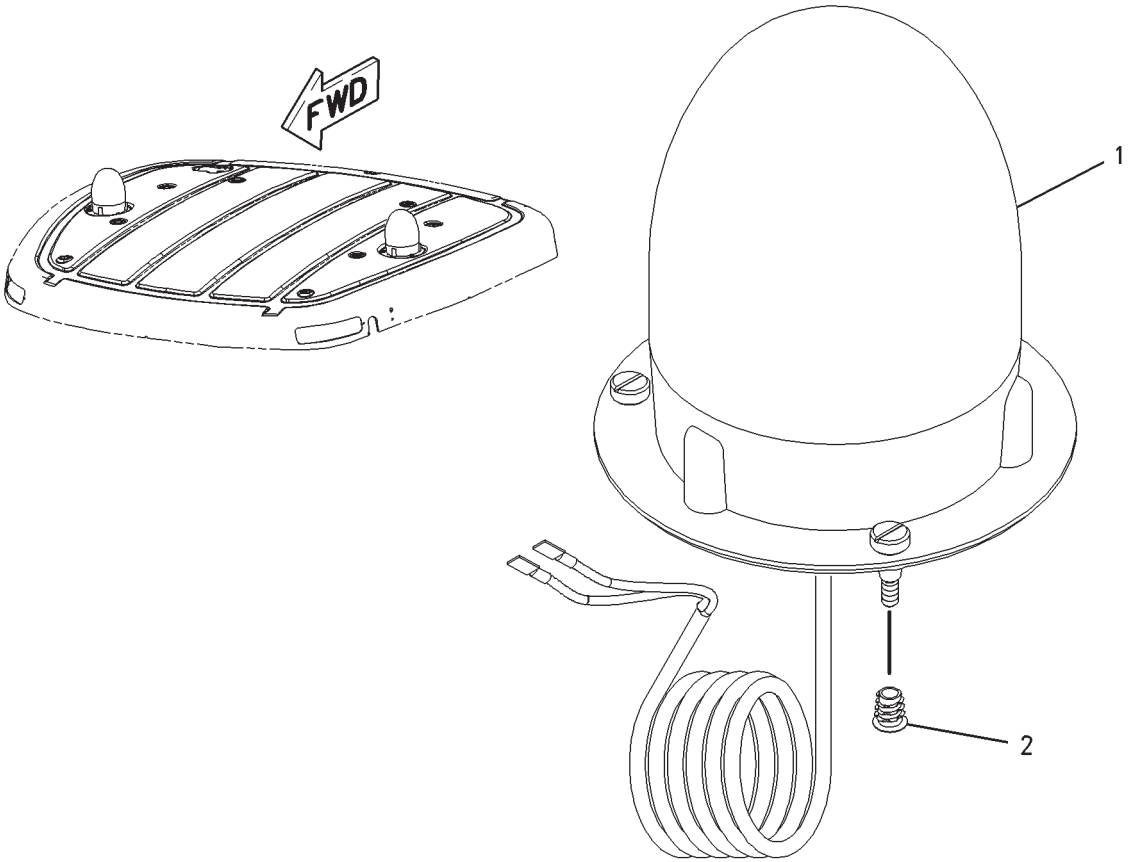

00891621

LIGHTING GP-WARNING - 216-9823

ITEM	NUMBER	QTY	DESCRIPTION
-	502765D1	--	LIGHTING GP-WARNING (FIELD KIT)
-	502773D1	--	LIGHTING GP-WARNING (FACTORY OPT) (NOT SERVICED, ORDER FIELD INSTAL'D)
-	216-9823	--	LIGHTING GP-WARN'G [A] (ORDER FIELD KIT)
1	162-4101	1	LIGHTING GP-WARNING (SEE BREAKDOWN FOR COMPONENTS)
2	CH216-7617	6	INSERT

[A] PART OF 502765D1 LIGHTING GP-WARN.

00891621
PR: t05i29k58b0109

LIGHTING GP-WARNING - 12V
162-4101

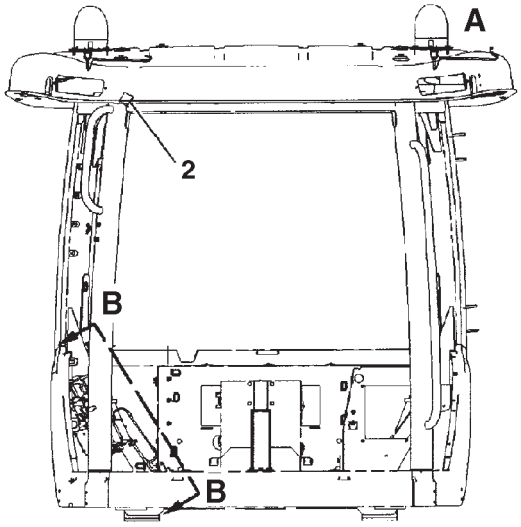

FRONT VIEW

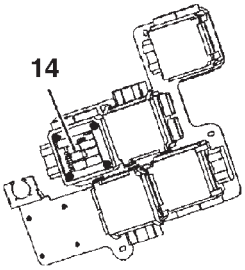

VIEW B-B

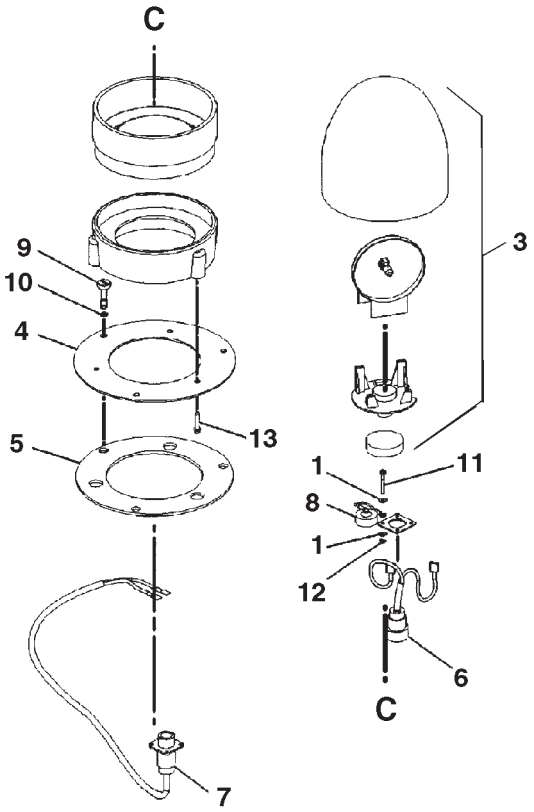

VIEW OF AREA A

0842107A

LIGHTING GP-WARNING - 12V
162-4101

ITEM	NUMBER	QTY	DESCRIPTION
-	162-4101	--	LIGHTING GP-WARNING [A] (NOT SERVICED)
1	CH4I-3038	16	WASHER (3.3X8X0.5)
2	169-8223	1	SWITCH-ROCKER (BEACON)
3	CH196-7341	2	LAMP GP-WARNING BEACON
	CH136-5254	1	LENS (ROTATING BEACON) (AMBER)
	CH9X-8118	1	LAMP (12 VOLT)
4	201-0486	2	PLATE
5	201-0487	2	GASKET
6	502190D1	2	HARNESS ASM (BEACON)
7	502179D1	2	HARNESS ASM
8	400753X1	2	CAP-SEALING
9	CH201-9691	6	SCREW (M6X1X26MM)
10	CH201-9692	6	RETAINER
11	400139X1	8	BOLT-SOCKET HEAD (M3X0.5X25MM)
12	CH3C-6969	8	NUT (M3X0.5)
13	CH6V-8548	6	SCREW-WASHER HEAD (8-32X.85 IN)
14	CH146-9439	1	RELAY (12 VOLT)

[A] PART OF 216-9823 LIGHTING GP-WARNING

0842107A
PR: t05i29k58b0110

LIGHTING GP-ROAD (LH TRAFFIC)

168-6580
FIELD INSTALLED
EAME ONLY

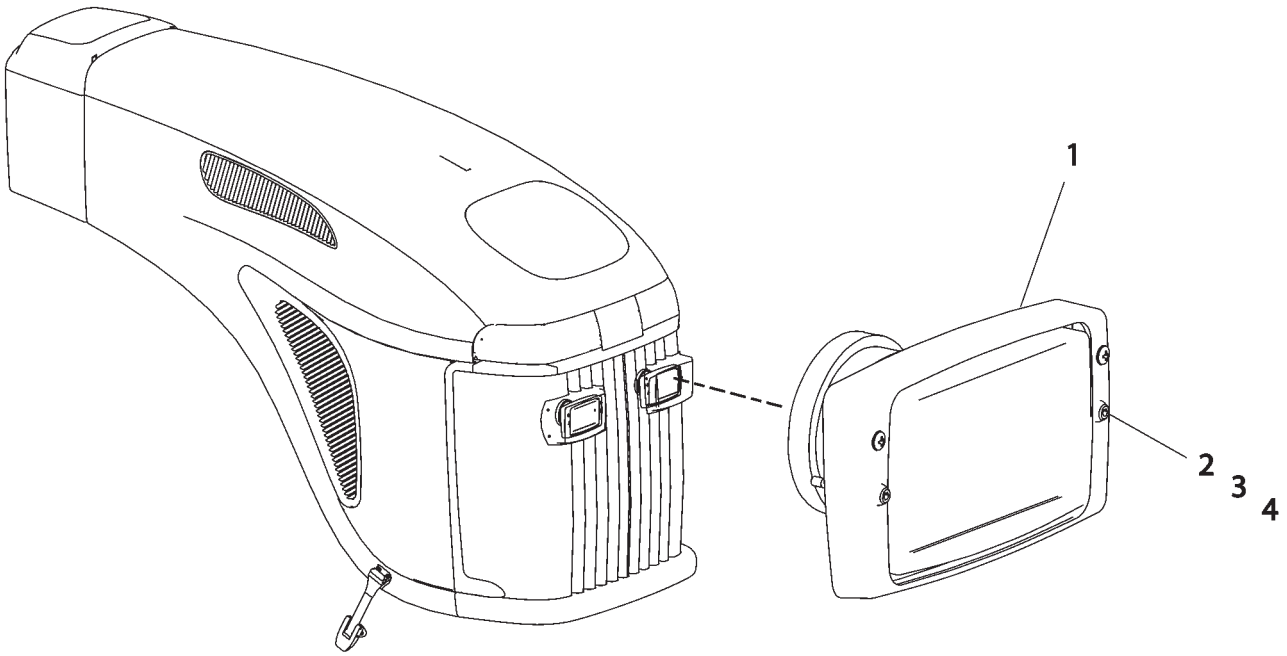

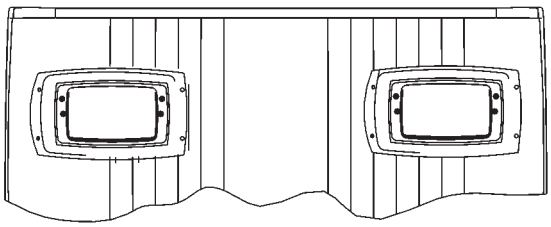

ALTERNATE CONFIGURATION
(T955, T956, T957, T958)

1686580F

LIGHTING GP-ROAD (LH TRAFFIC)

168-6580
FIELD INSTALLED
EAME ONLY

ITEM	NUMBER	QTY	DESCRIPTION
-	168-6580	--	LIGHTING GP-ROADING (LH TRAFFIC) [A]
1	155-0042	2	LAMP GP-HEAD
	CH8I-4256	1	BULB-HEADLAMP (12V-60W)
	CH121-9755	2	WASHER-SOFT (4.3IDX8ODX0.5)
	CH121-9754	1	CAP
	CH121-9753	2	WASHER-SOFT (4.3IDX9ODX0.5)
2	400132X1	4	BOLT (M4X0.7X30MM)
3	CH8C-9660	4	WASHER (4.6IDX7.9ODX0.8)
4	CH8T-2659	4	NUT (M4X0.7-6H THD SELF LOCK)

[A] KIT INSTALLED IN EUROPE ONLY

1686580F
PR: t05i29k58b0111

LIGHTING GP-ROAD (RH TRAFFIC)

168-6581
FIELD INSTALLED
EAME ONLY

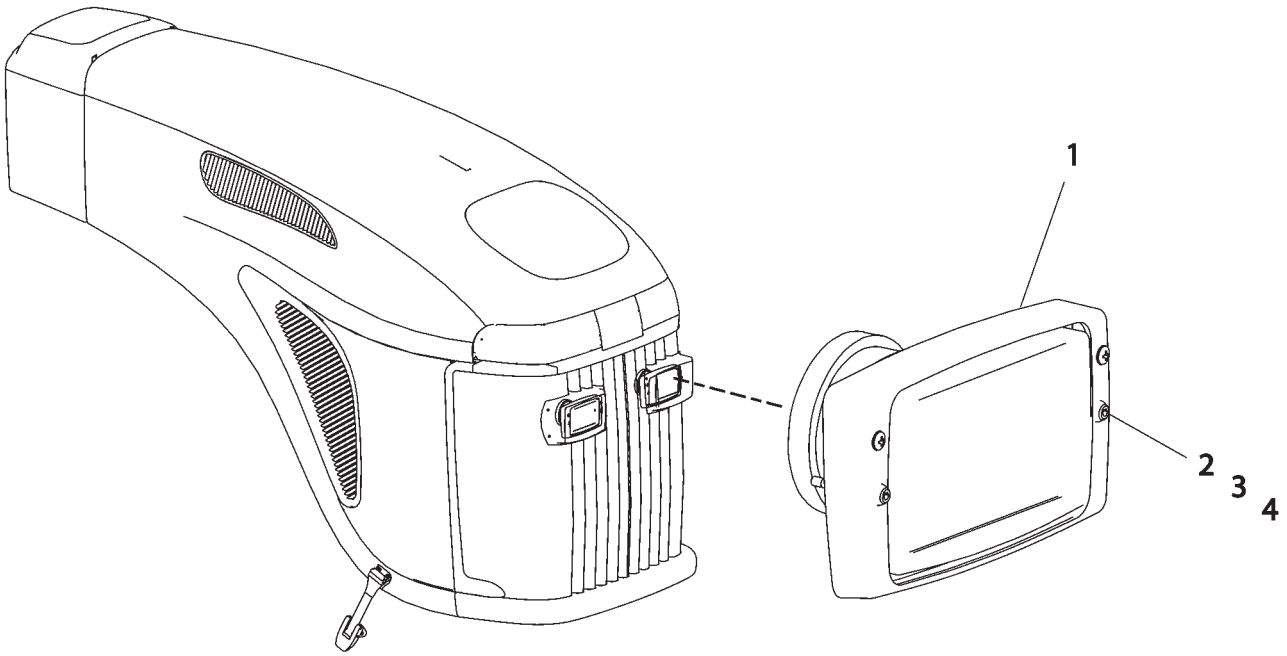

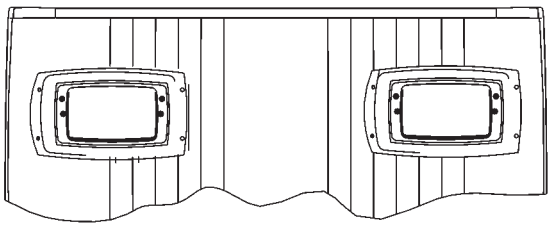

ALTERNATE CONFIGURATION
(T955, T956, T957, T958)

1686580F

LIGHTING GP-ROAD (RH TRAFFIC)

168-6581
FIELD INSTALLED
EAME ONLY

ITEM	NUMBER	QTY	DESCRIPTION
-	168-6581	--	LIGHTING GP-ROADING (LH TRAFFIC) [A]
1	155-0043	2	LAMP GP-HEAD
	CH8I-4256	1	BULB-HEADLAMP (12V-60W)
	CH121-9755	2	WASHER-SOFT (4.3IDX8ODX0.5)
	CH121-9754	1	CAP
	CH121-9753	2	WASHER-SOFT (4.3IDX9ODX0.5)
2	400132X1	4	BOLT (M4X0.7X30MM)
3	CH8C-9660	4	WASHER (4.6IDX7.9ODX0.8)
4	CH8T-2659	4	NUT (M4X0.7-6H THD SELF LOCK)

[A] KIT INSTALLED IN EUROPE ONLY

1686580F
PR: t05i29k58b0112

CONTROL GP-ELECTRONIC
501033D1

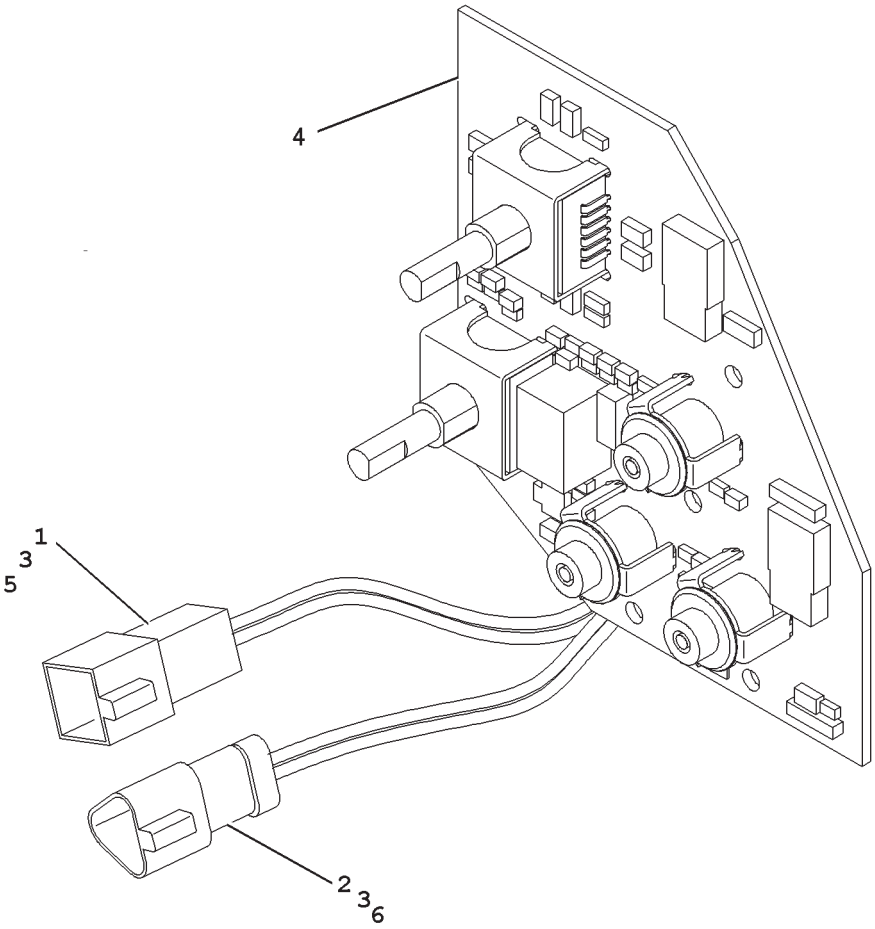

CONTROL GP-ELECTRONIC
501033D1

ITEM	NUMBER	QTY	DESCRIPTION
-	501033D1	--	CONTROL GP-ELECTRONIC [A]
1	400511X1	1	WEDGE-RECEPTACLE LOCK (2 PIN)
2	400717X1	1	WEDGE-RECEPTACLE LOCK (3 PIN)
3	400562X1	5	PIN-CONNECTOR
4	-----	1	CONTROL ASM-ELECTRONIC [B]
5	CH3E-3363	1	RECEPTACLE (2 PIN)
6	CH3E-3369	1	RECEPTACLE (3 PIN)

[A] PART OF 136-5477;166-1211
WIRING GP-CONSOLE
[B] NOT SERVICED SEPARATELY

00759685
PR: t05i29k58b0113

MOUNTING GP-BATTERY - 142-9760
3 BATTERIES

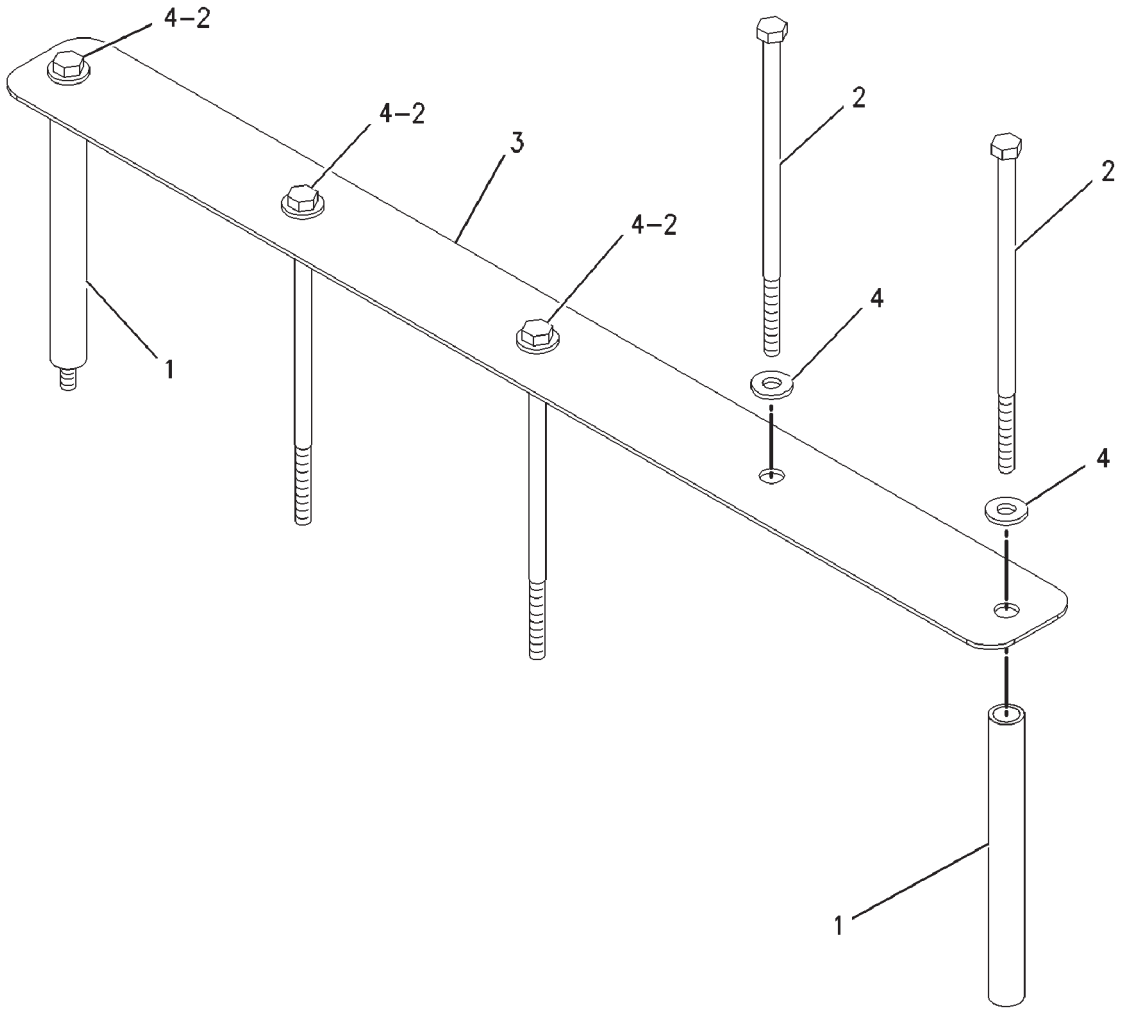

00837389

MOUNTING GP-BATTERY - 142-9760

3 BATTERIES

ITEM	NUMBER	QTY	DESCRIPTION
-	142-9760	--	MOUNTING GP-BATTERY [A] (NOT SERVICED)
1	CH149-2758	2	SPACER (15.9X21.4X204.22)
2	400005X1	4	BOLT-HEX HEAD (M10X1.5X230MM)
3	192-4158	1	PLATE
4	CH7X-7729	4	WASHER (11X25X3)

[A] PART OF 136-5658; 136-5659
BATTERY & WIRING GP

00837389
PR: t05i29k58b0114

MOUNTING GP-BATTERY - 142-9739

4 BATTERIES

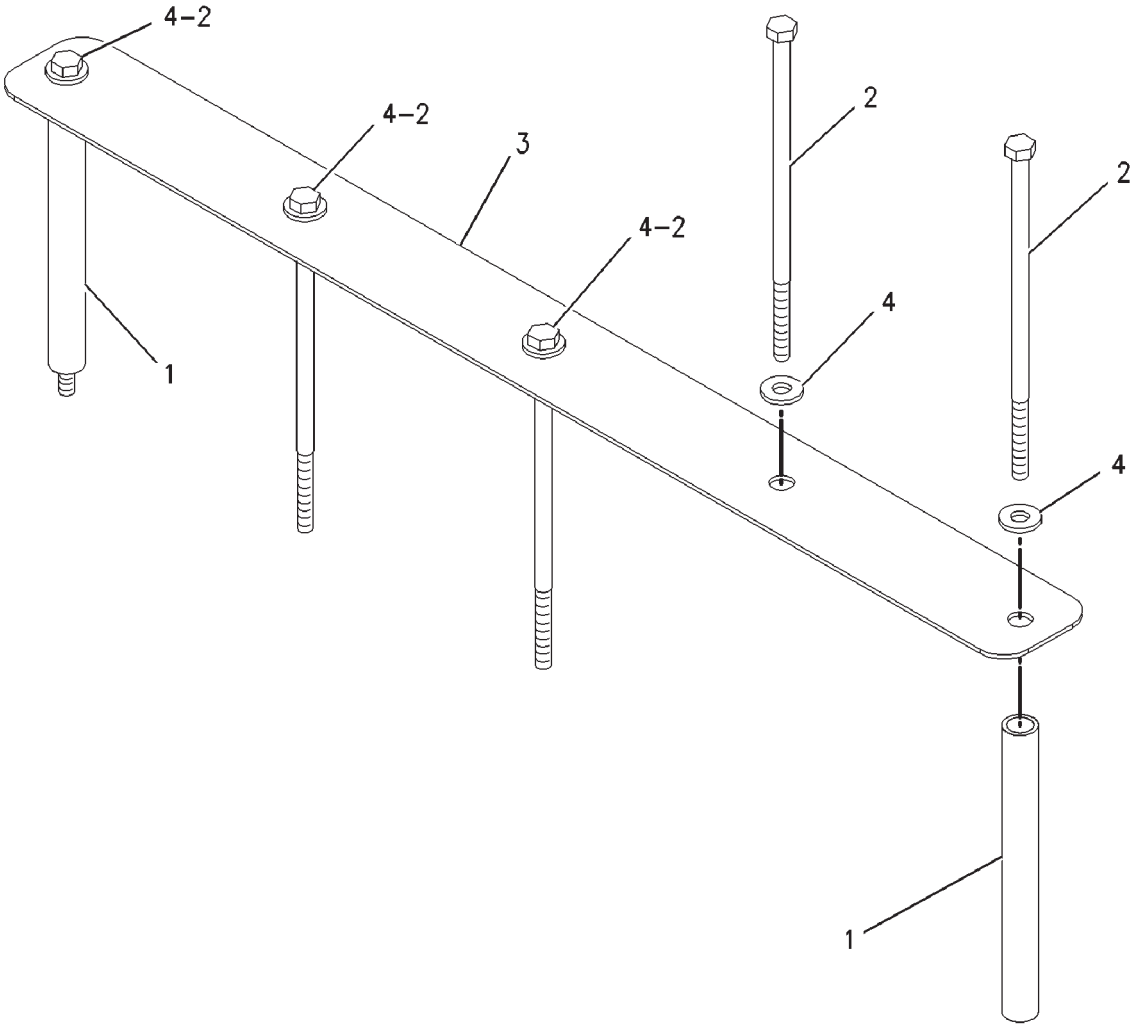

00837360

MOUNTING GP-BATTERY - 142-9739

4 BATTERIES

ITEM	NUMBER	QTY	DESCRIPTION
-	142-9739	--	MOUNTING GP-BATTERY [A] (NOT SERVICED)
1	CH149-2758	2	SPACER (15.9X21.4X204.22)
2	400005X1	5	BOLT-HEX HEAD (M10X1.5X230MM)
3	189-5477	1	PLATE
4	CH7X-7729	5	WASHER (11X25X3)

[A] PART OF 136-5662; 136-5663 BATTERY
& WIRING GP

00837360
PR: t05i29k58b0115

FUSE GP - 169-6380

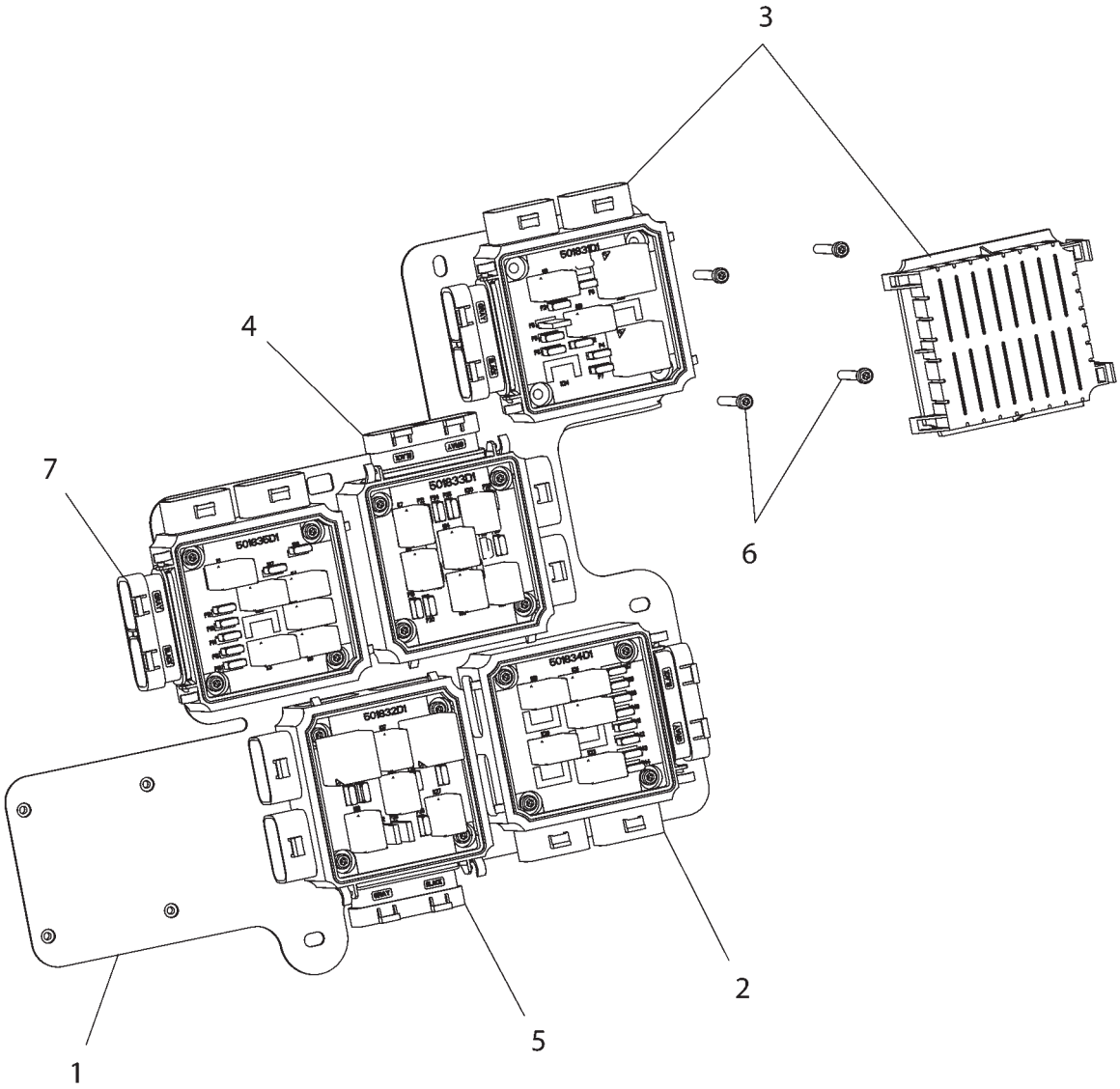

1726841J

FUSE GP - 169-6380

ITEM	NUMBER	QTY	DESCRIPTION
-	169-6380	--	PANEL GP-FUSE (NOT SERVICED) [A]
1	501887D1	1	PLATE AS
	CH8T-8874	20	NUT-WELD (M5X0.8 THD)
2	501834D1	1	BLOCK AS-FUSE (SEE BREAKDOWN FOR COMPONENTS)
3	501830D1	1	BLOCK AS-FUSE (SEE BREAKDOWN (SEE BREAKDOWN FOR COMPONENTS)
4	501833D1	1	BLOCK AS-FUSE (SEE BREAKDOWN FOR COMPONENTS)
5	501832D1	1	BLOCK AS-FUSE (SEE BREAKDOWN FOR COMPONENTS)
6	400208X1	20	BOLT-SOCKET HEAD (M5X0.8X40MM)
7	501835D1	1	BLOCK AS-FUSE (SEE BREAKDOWN FOR COMPONENTS)

[A] PART OF 152-0420 WIRING GP-CAB

1726841J
PR: t05i29k58b0116

FUSE GP-CLAAS - 172-6841

EAME ONLY

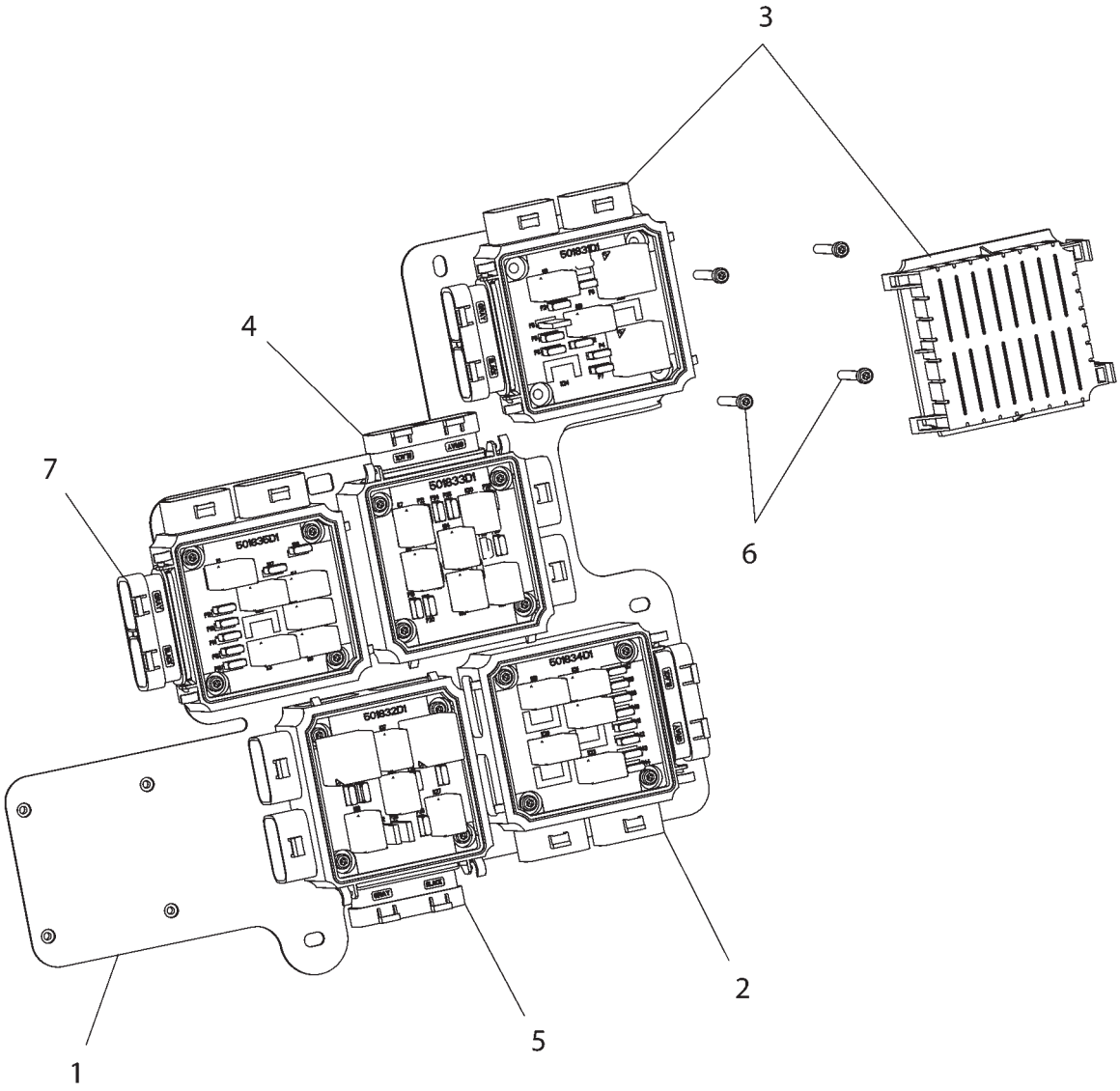

1726841J

FUSE GP-CLAAS - 172-6841

EAME ONLY

ITEM	NUMBER	QTY	DESCRIPTION
-	172-6841	--	PANEL GP-FUSE [A]
1	501887D1	1	PLATE AS
	CH8T-8874	20	NUT-WELD (M5X0.8 THD)
2	501834D1	1	BLOCK AS-FUSE (SEE BREAKDOWN FOR COMPONENTS)
3	501831D1	1	BLOCK AS-FUSE (SEE BREAKDOWN (SEE BREAKDOWN FOR COMPONENTS)
4	501833D1	1	BLOCK AS-FUSE (SEE BREAKDOWN FOR COMPONENTS)
5	501832D1	1	BLOCK AS-FUSE (SEE BREAKDOWN FOR COMPONENTS)
6	400208X1	20	BOLT-SOCKET HEAD (M5X0.8X40MM)
7	501835D1	1	BLOCK AS-FUSE (SEE BREAKDOWN FOR COMPONENTS)

[A] PART OF 152-0005 WIRING GP-CAB

1726841J
PR: t05i29k58b0117

BLOCK AS-FUSE - 501829D1

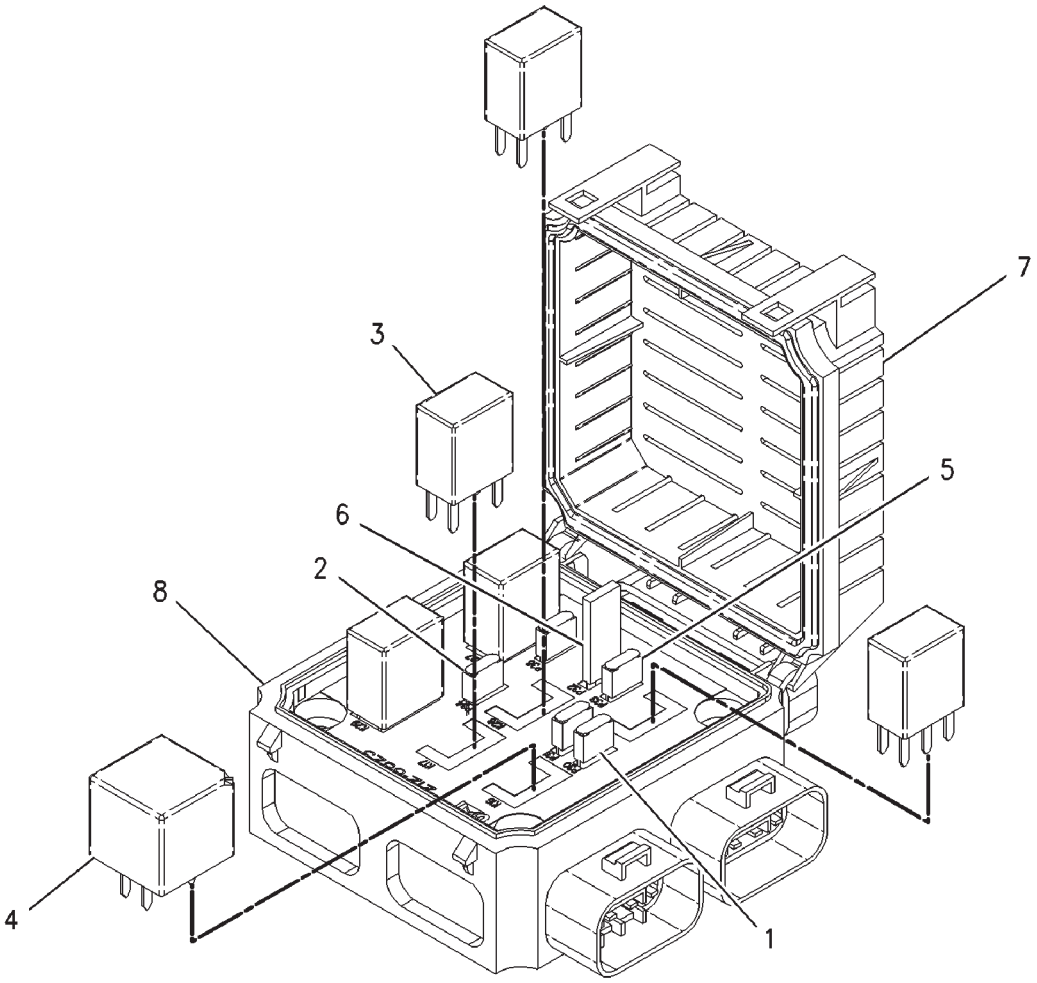

00878049

BLOCK AS-FUSE - 501829D1

ITEM	NUMBER	QTY	DESCRIPTION
-	501829D1	--	BLOCK ASY-FUSE (COMPLETE) [A]
1	CH113-8490	2	FUSE (10 AMP)
2	CH113-8491	2	FUSE (15 AMP)
3	CH146-9439	5	RELAY (12 VOLT)
4	CH170-2237	1	RELAY (12 VOLT)
5	CH113-8492	1	FUSE (20 AMP)
6	CH124-3548	1	FUSE (30 AMP)
7	501836D1	1	COVER
8	501841D1	1	BLOCK-FUSE

[A] PART OF 216-0852 CONTROL AR-
COMMUNICATION

00878049
PR: t05i29k58b0118

BLOCK AS-FUSE
501830D1

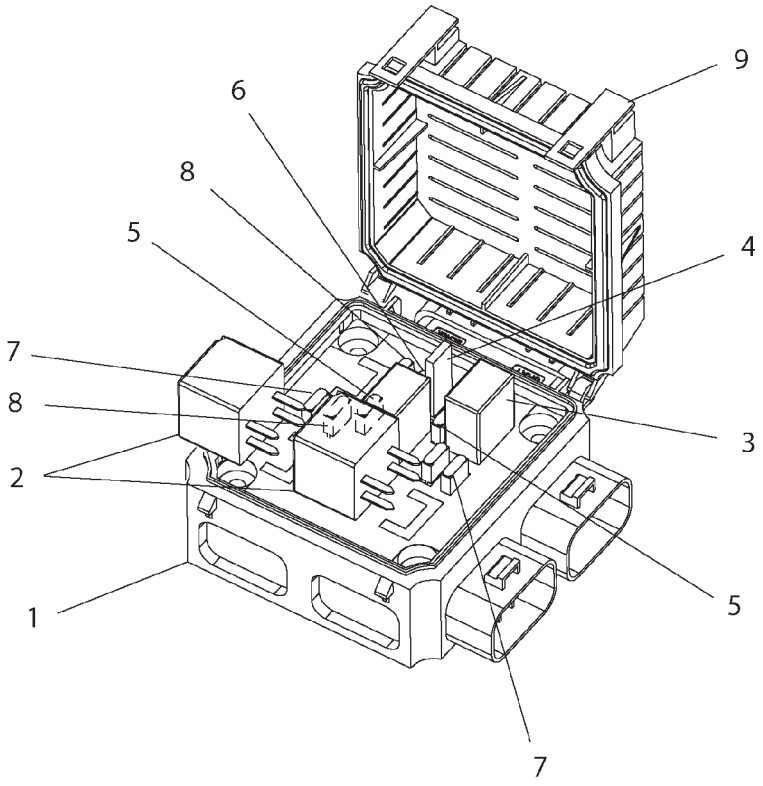

501830DA

BLOCK AS-FUSE
501830D1

ITEM	NUMBER	QTY	DESCRIPTION
-	501830D1	--	BLOCK AS-FUSE [A]
1	501837D1	1	BLOCK-FUSE
2	CH170-2237	2	RELAY AS (12V)
3	CH146-9439	2	RELAY AS (12V)
4	CH180-0613	1	BREAKER AS-CIRCUIT (30A)
5	CH113-8490	3	FUSE (10A)
6	CH113-8491	1	FUSE (15A)
7	CH124-3548	2	FUSE (30A)
8	CH113-8492	2	FUSE (20A)
9	501836D1	1	COVER-FUSE BLOCK

[A] PART OF 169-6380 FUSE GP

501830DA
PR: t05i29k58b0119

BLOCK AS-FUSE
501831D1

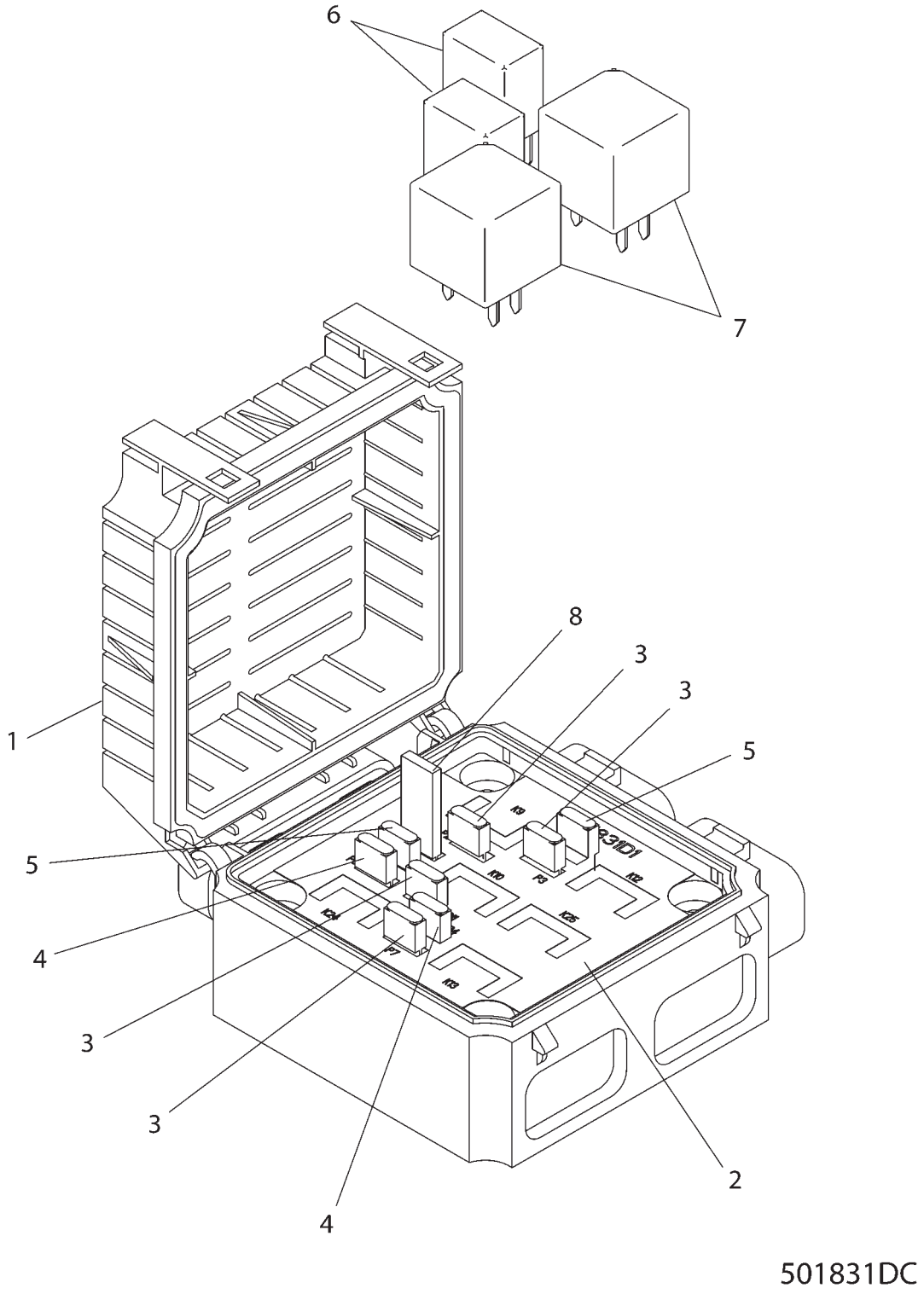

BLOCK AS-FUSE
501831D1

ITEM	NUMBER	QTY	DESCRIPTION
-	501831D1	--	BLOCK AS-FUSE [A]
1	501836D1	1	COVER
2	501840D1	1	BLOCK-FUSE
3	CH113-8490	4	FUSE (10A)
4	CH113-8492	2	FUSE (20A)
5	CH124-3548	2	FUSE (30A)
6	CH146-9439	2	RELAY AS (12V)
7	CH170-2237	2	RELAY AS (12V)
8	CH180-0613	1	BREAKER AS-CIRCUIT (30A)

[A] PART OF 172-6841 FUSE GP

501831DC
PR: t05i29k58b0120

BLOCK AS-FUSE
501832D1

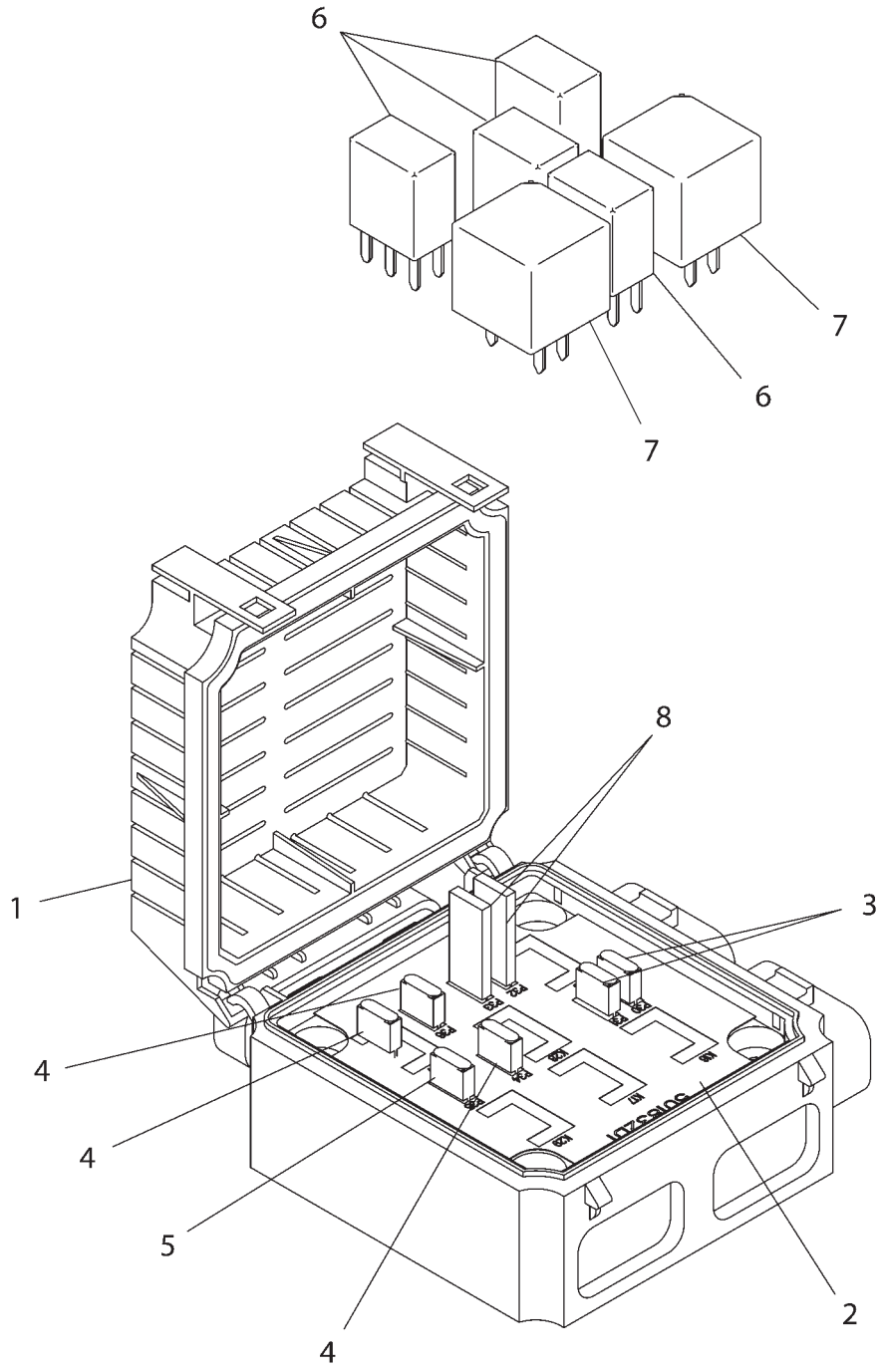

501832DC

BLOCK AS-FUSE
501832D1

ITEM	NUMBER	QTY	DESCRIPTION
-	501832D1	--	BLOCK AS-FUSE [A]
1	501836D1	1	COVER
2	501877D1	1	BLOCK-FUSE
3	CH113-8490	2	FUSE (10A)
4	CH113-8491	3	FUSE (15A)
5	CH124-3548	1	FUSE (30A)
6	CH146-9439	4	RELAY AS (12V)
7	CH170-2237	2	RELAY AS (12V)
8	CH180-0613	2	BREAKER AS-CIRCUIT (30A)

[A] PART OF 172-6841 FUSE GP

501832DC
PR: t05i29k58b0121

BLOCK AS-FUSE
501833D1

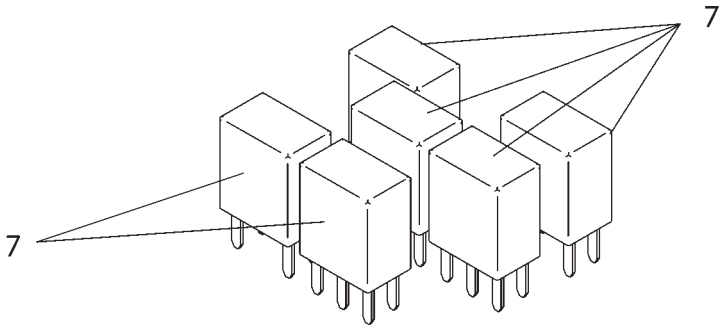

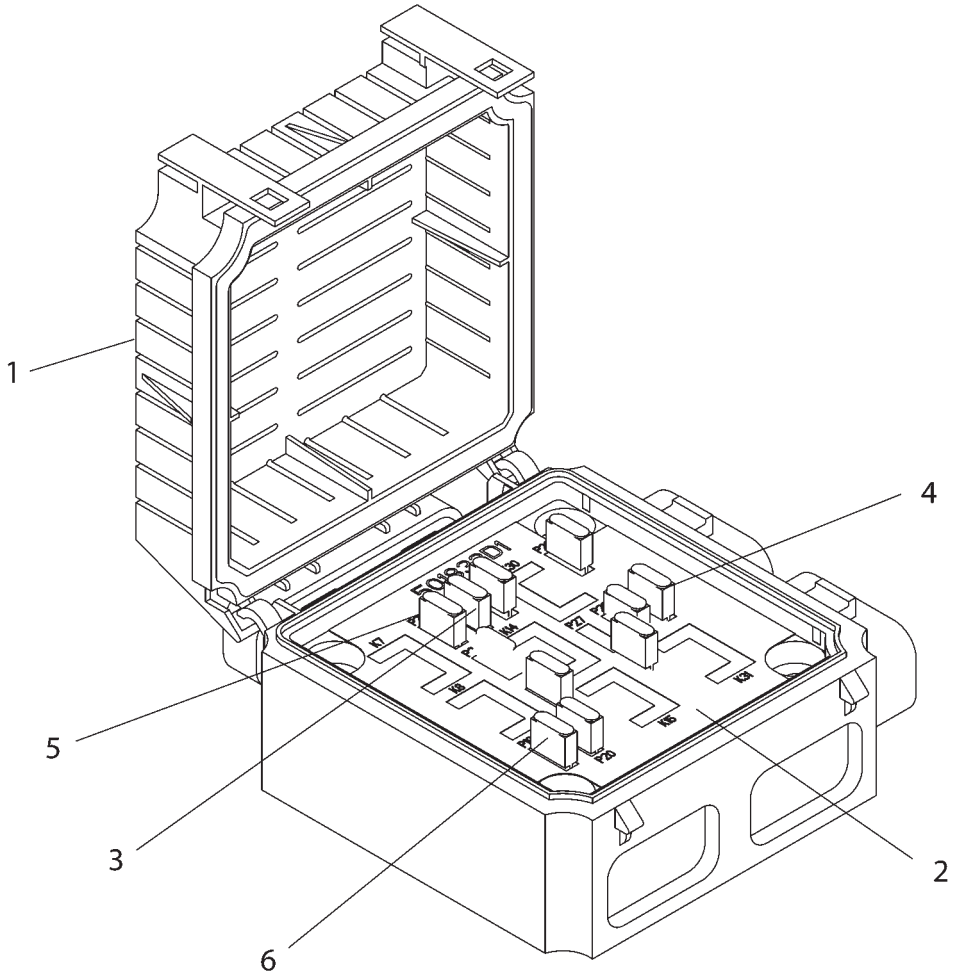

501833DC

BLOCK AS-FUSE
501833D1

ITEM	NUMBER	QTY	DESCRIPTION
-	501833D1	--	BLOCK AS-FUSE [A]
1	501836D1	1	COVER
2	501838D1	1	BLOCK-FUSE
3	CH113-8490	3	FUSE (10V)
4	CH113-8491	4	FUSE (15A)
5	CH124-3548	2	FUSE (30A)
6	CH141-2759	2	FUSE (5A)
7	CH146-9439	6	RELAY AS (12V)

[A] PART OF 172-6841 FUSE GP

501833DC
PR: t05i29k58b0122

BLOCK AS-FUSE
501834D1

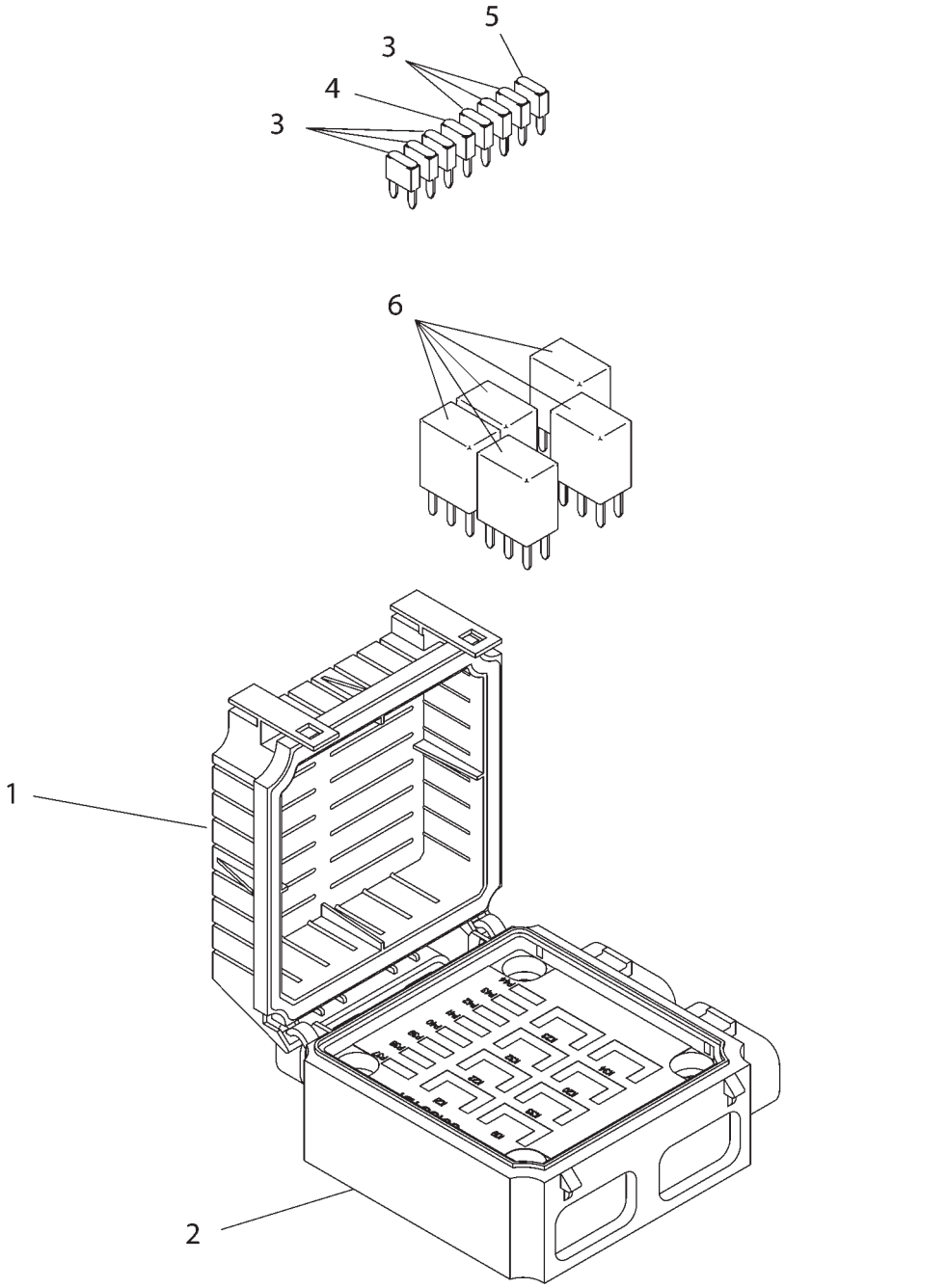

501834DC

BLOCK AS-FUSE
501834D1

ITEM	NUMBER	QTY	DESCRIPTION
-	501834D1	--	BLOCK AS-FUSE [A]
1	501836D1	1	COVER
2	501839D1	1	BLOCK-FUSE
3	CH113-8491	6	FUSE (15A)
4	CH113-8492	1	FUSE (20V)
5	CH141-2759	1	FUSE (5A)
6	CH146-9439	5	RELAY AS (12V)

[A] PART OF 172-6841 FUSE GP

501834DC
PR: t05i29k58b0123

BLOCK AS-FUSE
501835D1

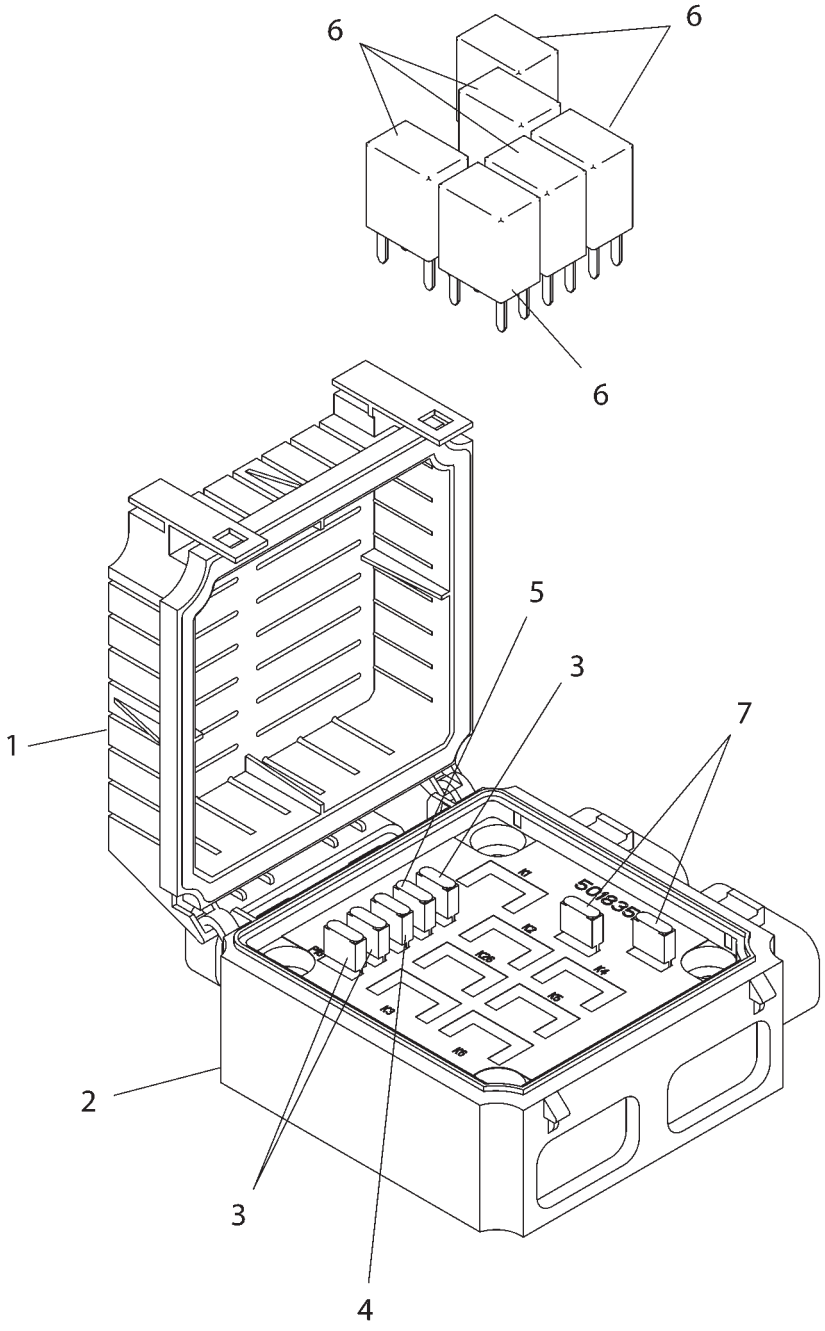

501835D1

BLOCK AS-FUSE
501835D1

ITEM	NUMBER	QTY	DESCRIPTION
-	501835D1	--	BLOCK AS-FUSE [A]
1	501836D1	1	COVER
2	501842D1	1	BLOCK-FUSE
3	CH113-8491	3	FUSE (15A)
4	CH113-8492	1	FUSE (20V)
5	CH141-2759	1	FUSE (5A)
6	CH146-9439	6	RELAY AS (12V)
7	CH173-3175	2	BREAKER AS-CIRCUIT (20A)

[A] PART OF 172-6841 FUSE GP

501835DC
PR: t05i29k58b0124

SENSOR & MTG GP-GROUND SPEED
136-5388

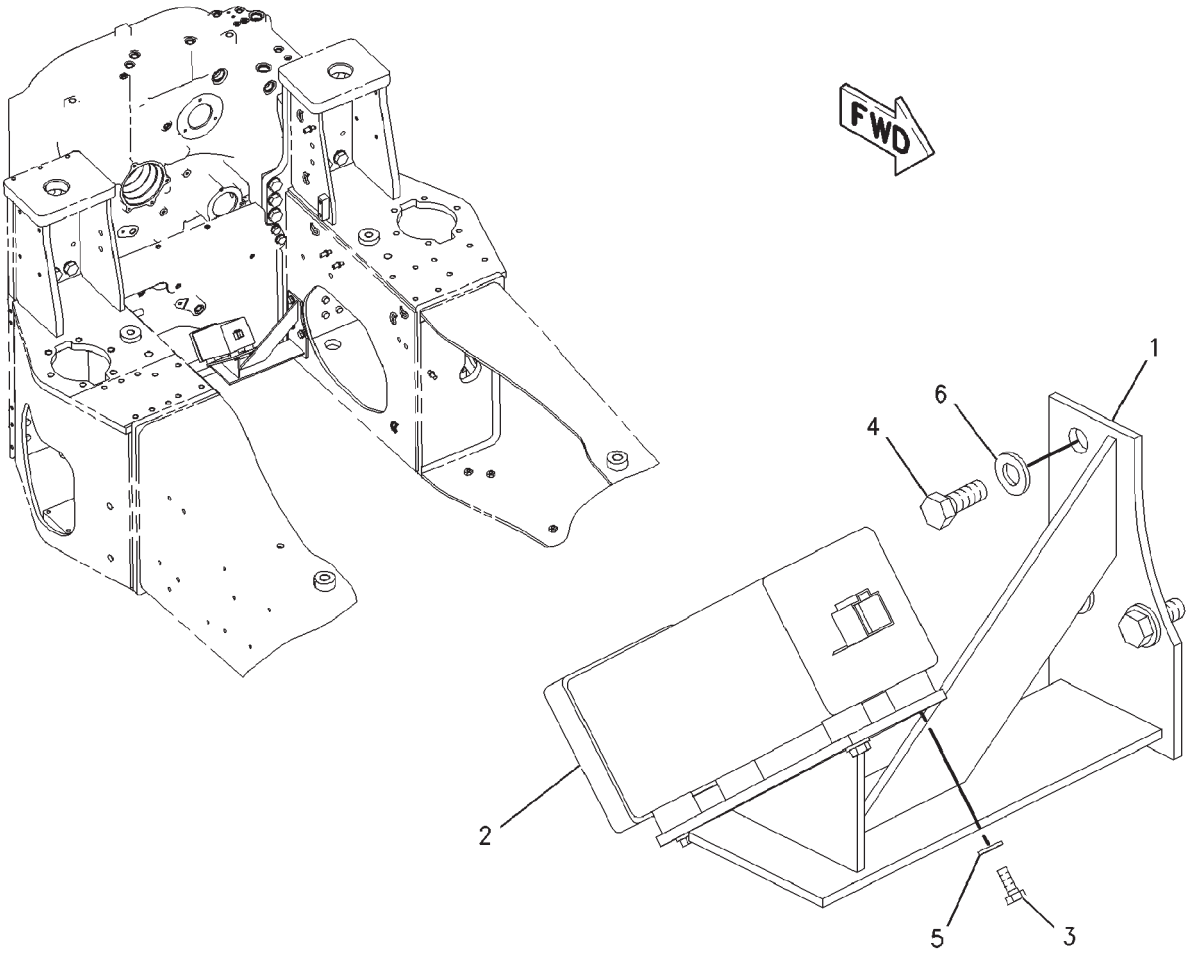

00850277

SENSOR & MTG GP-GROUND SPEED
136-5388

ITEM	NUMBER	QTY	DESCRIPTION
-	502757D1	--	SENSOR & MTG GP-GROUND SPEED (FIELD INSTALLED)
-	136-5388	--	SENSOR & MTG GP-GND SPD [A] (FACTORY) (NOT SERVICED-ORDER FIELD INSTALLED)
1	136-5261	1	BRACKET ASM
2	CH179-4265	1	SENSOR GP-GROUND SPEED
3	400152X1	4	BOLT (M6X1X16MM)
4	400041X1	3	BOLT (M12X1.75X30MM)
5	CH8T-4205	4	WASHER-HARD (7.2X14.5X2MM)
6	400357X1	3	WASHER-HARD (M12X25.5X3)

[A] PART OF 502757D1 SENSOR GP

00850277
PR: t05i29k58b0125

SENSOR & MTG GP-GROUND SPEED

136-5404
EAME

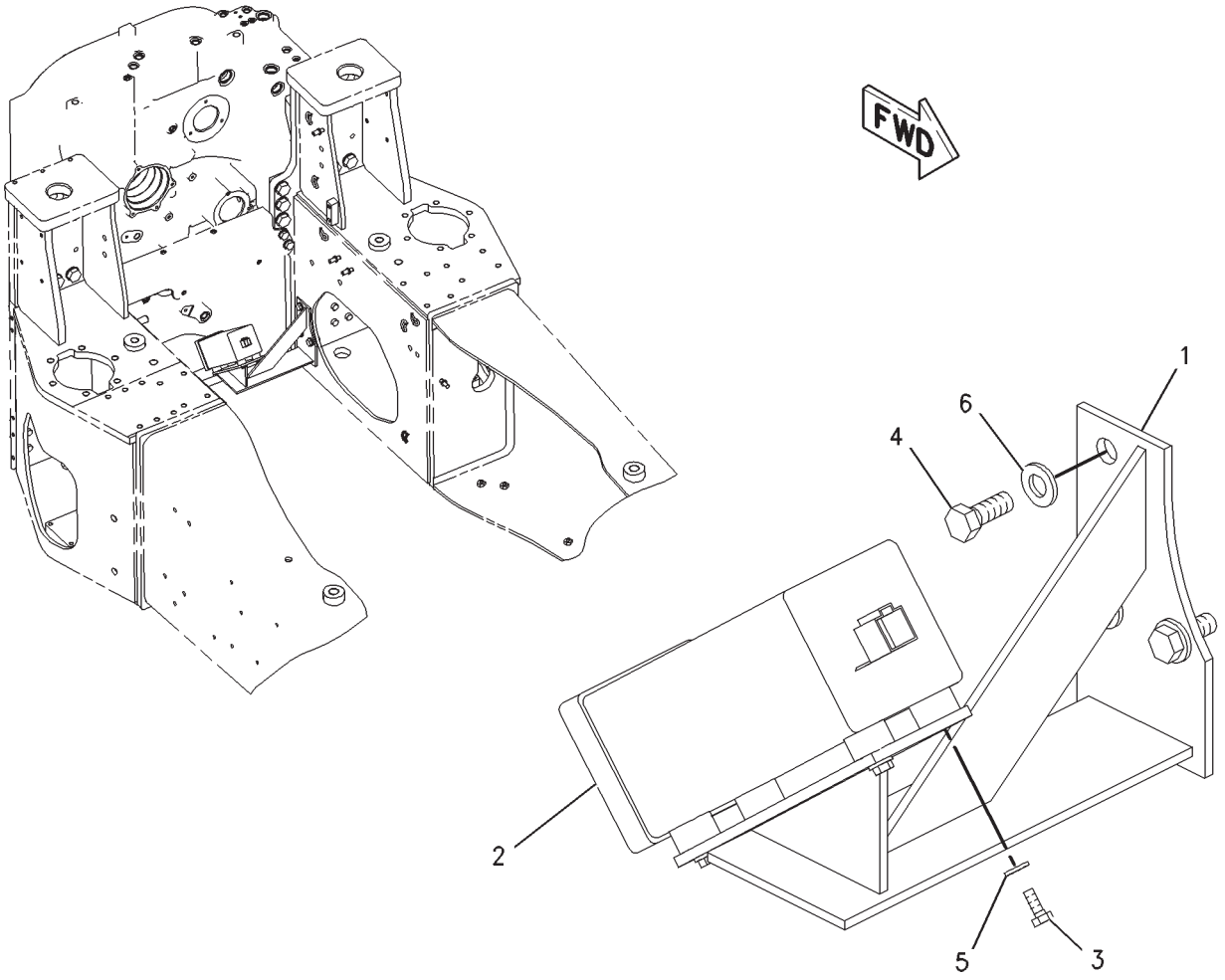

00784295

SENSOR & MTG GP-GROUND SPEED

136-5404
EAME

ITEM	NUMBER	QTY	DESCRIPTION
-	502774D1	--	SENSOR & MTG GP-GROUND SPEED (FIELD INSTALLED)
-	136-5404	--	SENSOR & MTG GP-GND SPD [A] (FACTORY) (NOT SERVICED-ORDER FIELD INSTALLED)
1	136-5261	1	BRACKET AS
2	CH180-7317	1	SENSOR GP-GROUND SPEED
3	400152X1	4	BOLT (M6X1X16MM)
4	400041X1	3	BOLT (M12X1.75X30MM)
5	CH8T-4205	4	WASHER-HARD (7.2X14.5X2MM)
6	400357X1	3	WASHER-HARD (M12X25.5X3)

[A] PART OF 502774D1 SENSOR GP

00784295
PR: t05i29k58b0126

STATING AID GP-ETHER - 186-1671

MT835 & MT845

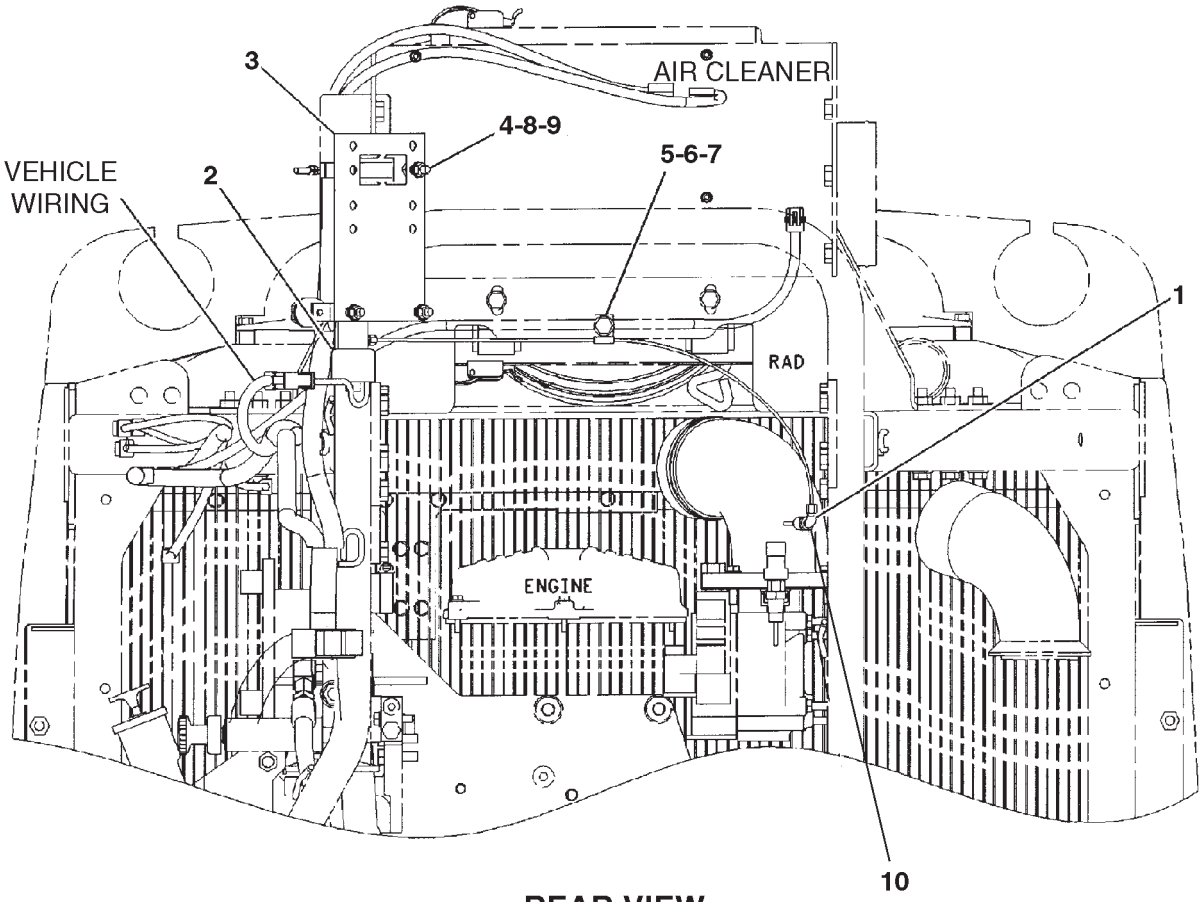

REAR VIEW

0888158A

STATING AID GP-ETHER - 186-1671

MT835 & MT845

ITEM	NUMBER	QTY	DESCRIPTION
-	186-1671	--	STARTING AID GP-ETHER [A] (NOT SERVICED) (INCL. ITEM 1 THRU 9)
1	224-2189	1	ATOMIZER
2	210-8961	1	VALVE GP-ETHER (SEE BREAKDOWN FOR COMPONENTS)
3	211-1677	1	MOUNTING GP-ETHER CANISTER
	CH210-4570	1	CLAMP-HOSE T-BOLT
	210-3930	1	BRACKET-ETHER VALVE
4	400340X1	3	NUT (M8X1.25)
5	400602X1	1	CLIP
6	400287X1	1	WASHER-HARD (11X21X2.5)
7	400040X1	1	BOLT (M10X1.5X20MM)
8	400339X1	6	WASHER-HARD (8.8X16X2)
9	400341X1	3	BOLT (M8X1.25X25MM)
10	5P-3413		SEALANT-PIPE (50 ML TUBE)
	7N-0296	1	CYLINDER-ETHER (NOT SHOWN)

[A] PART OF 172-5361; 172-5362
INSTALLATION AR-ENGINE

0888158A
PR: t05i29k58b0127

STARTING AID GP-ETHER - 187-1740
MT855 & MT865

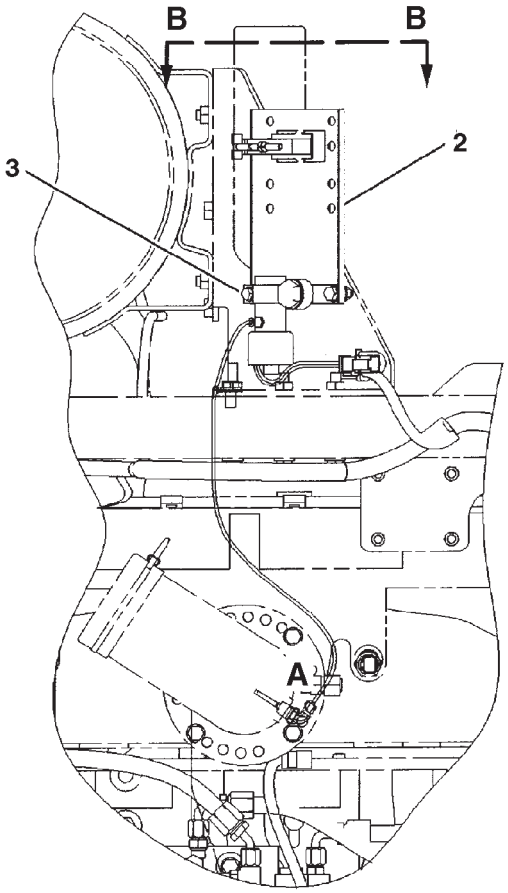

LEFT SIDE VIEW

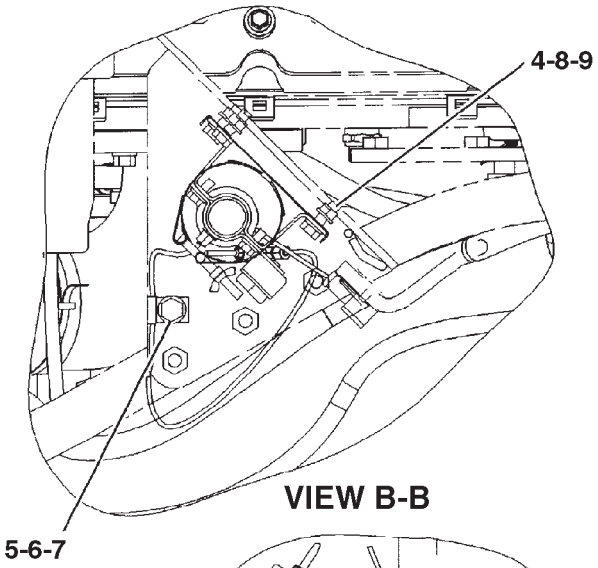

VIEW B-B

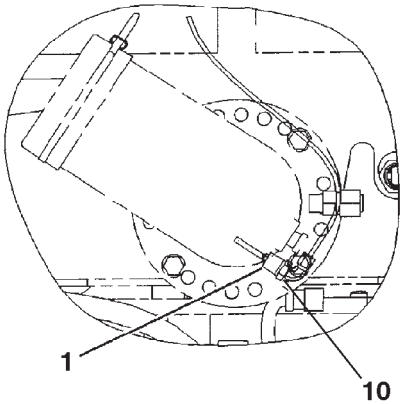

VIEW OF AREA A

0902125A

STARTING AID GP-ETHER - 187-1740

MT855 & MT865

ITEM	NUMBER	QTY	DESCRIPTION
-	187-1740	--	STARTING AID GP-ETHER [A] (NOT SERVICED) (INCL. ITEM 1 THRU 9)
1	210-3932	1	ATOMIZER
2	211-1677	1	MOUNTING GP-ETHER CANISTER
	CH210-4570	1	CLAMP-HOSE T-BOLT
	210-3930	1	BRACKET-ETHER VALVE
3	211-8220	1	VALVE GP-ETHER (SEE BREAKDOWN FOR COMPONENTS)
4	400340X1	3	NUT (M8X1.25)
5	400602X1	1	CLIP
6	400287X1	1	WASHER-HARD (11X21X2.5)
7	400040X1	1	BOLT (M10X1.5X20MM)
8	400339X1	6	WASHER-HARD (8.8X16X2)
9	400341X1	3	BOLT (M8X1.25X25MM)
10	5P-3413		SEALANT-PIPE (50 ML TUBE)
	7N-0296	1	CYLINDER-ETHER (NOT SHOWN)

[A] PART OF 172-5363; 172-5364
INSTALLATION AR-ENGINE

0902125A
PR: t05i29k58b0128

STARTING MOTOR GP-ELECTRIC - 208-0090

12 VOLT
MT835 & MT845

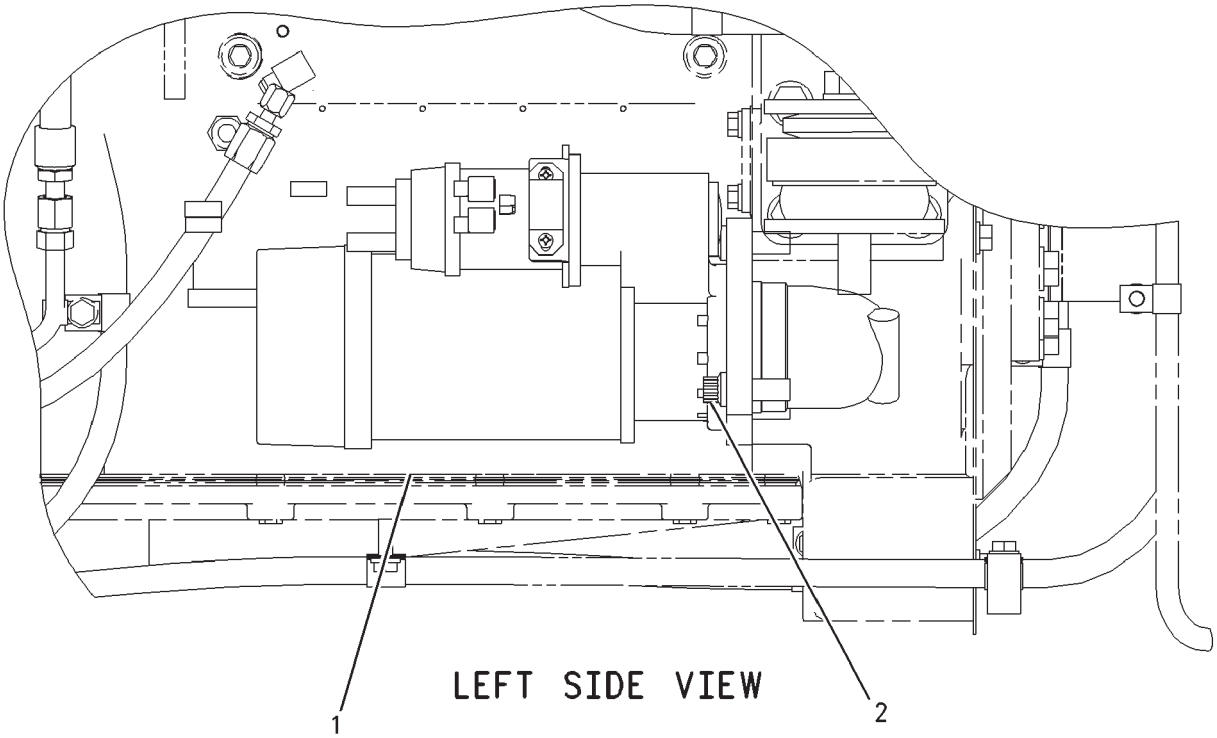

00887867

STARTING MOTOR GP-ELECTRIC - 208-0090

12 VOLT
MT835 & MT845

ITEM	NUMBER	QTY	DESCRIPTION
-	208-0090	--	STARTING MOTOR GP-ELECTRIC [A] (NOT SERVICED)
1	502284D1	1	STARTING MOTOR AS-ELECTRIC (SEE BREAKDOWN FOR COMPONENTS)
2	400265X1	3	BOLT-12PT (5/8-11X44.4MM)

[A] PART OF 172-5361; 172-5362
INSTALLATION AR-ENGINE

00887867
PR: t05i29k58b0129

STARTING MOTOR GP-ELECTRIC - 180-2924

MT855 & MT865

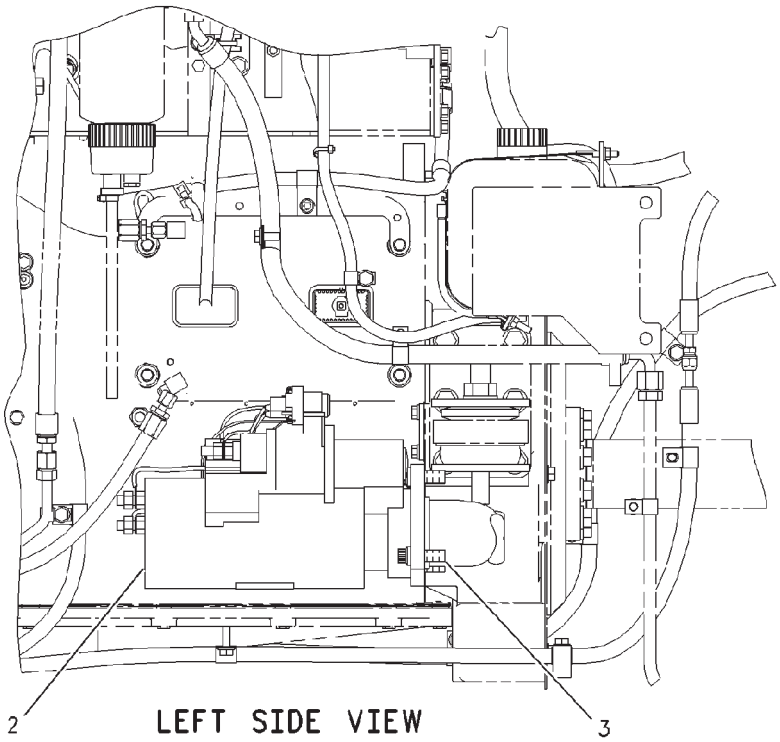

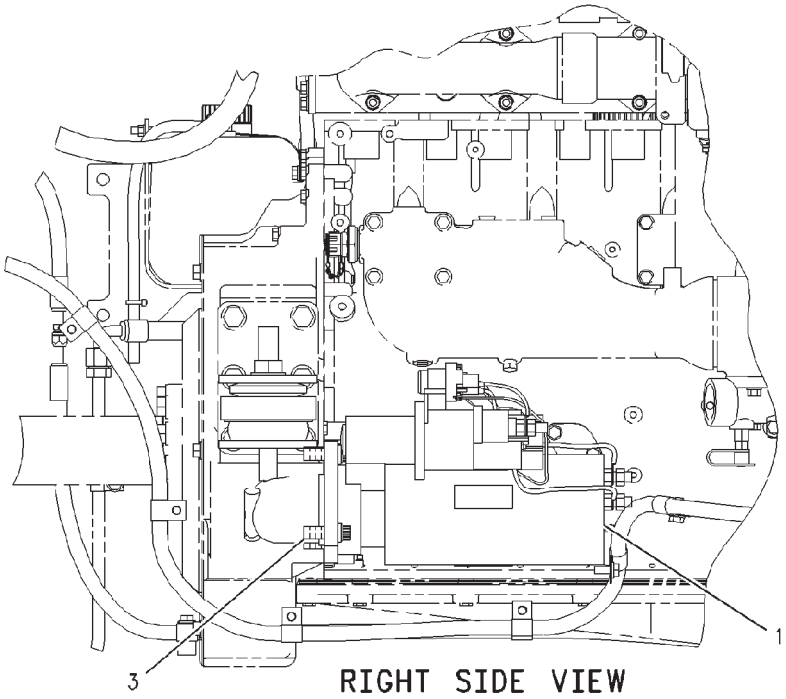

00868926

STARTING MOTOR GP-ELECTRIC - 180-2924

MT855 & MT865

ITEM	NUMBER	QTY	DESCRIPTION
-	180-2924	--	STARTING MOTOR GP-ELECTRIC [A] (NOT SERVICED)
1	502282D1	1	STARTING MOTOR GP-ELECTRIC (RH) (SEE BREAKDOWN FOR COMPONENTS)
2	502283D1	1	STARTING MOTOR GP-ELECTRIC (LH) (SEE BREAKDOWN FOR COMPONENTS)
3	400265X1	6	BOLT-12 POINT HEAD (5/8-11X44.4DAC)

[A] PART OF 172-5363;172-5364;187-1743;
187-1744 INSTALLATION AR-ENGINE

00868926
PR: t05i29k58b0130

STARTING MOTOR AS-ELECTRIC - 502284D1

12 VOLT
MT835 & MT845

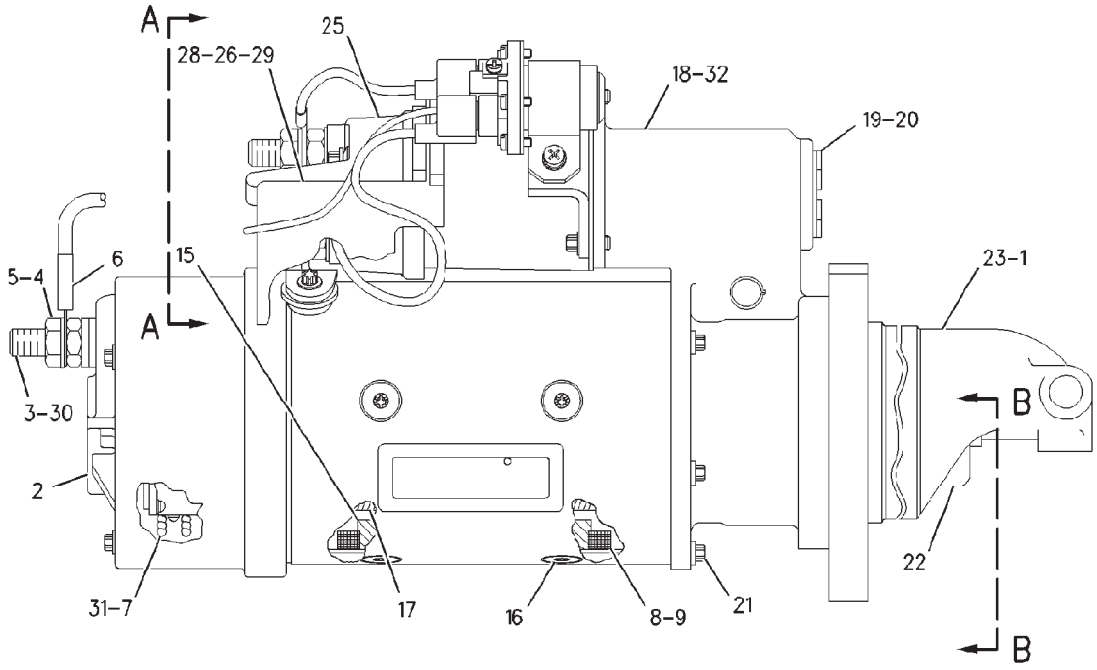

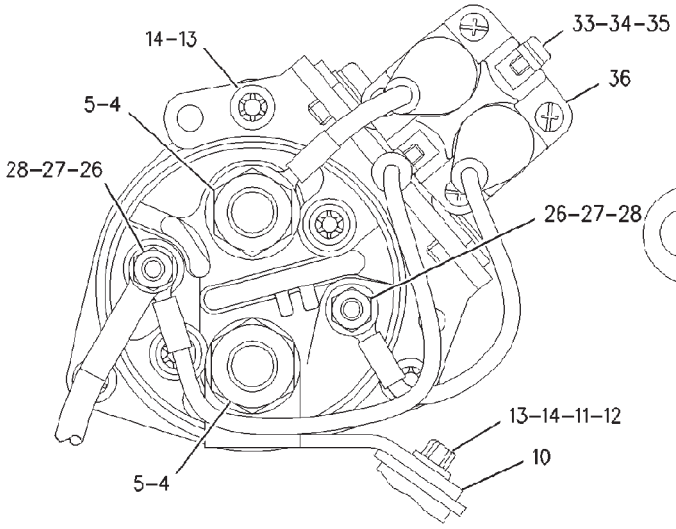

VIEW A-A

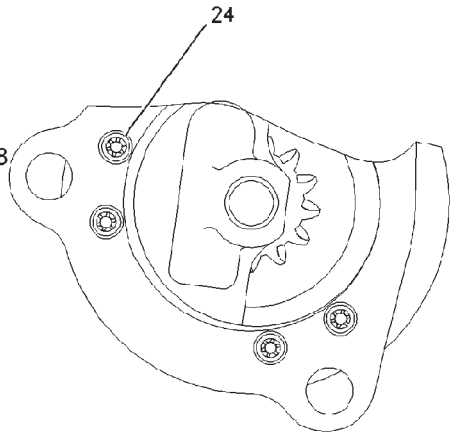

VIEW B-B

00888492

STARTING MOTOR AS-ELECTRIC - 502284D1

12 VOLT
MT835 & MT845

ITEM	NUMBER	QTY	DESCRIPTION
-	502284D1	--	STARTING MOTOR AS-ELECTRIC [A]
1	3T-3434	6	PLUG
2	7T-3279	1	HOUSING
3	8T-8566	1	TERMINAL
4	6V-8188	4	NUT (1/2-13)
5	7X-0562	4	WASHER-HARD (13.5X19X0.8)
6	3T-3422	1	WIRE
7	8T-8570	1	HOLDER-BRUSH
8	8T-8568	1	COIL-FIELD
9	7T-3454	1	INSULATOR
10	7T-3271	1	CONNECTOR
11	7T-3451	1	INSULATOR-TERMINAL
12	8T-8569	1	INSULATOR-TERMINAL
13	5S-7349	4	BOLT (1/4-20X0.5 IN)
14	8T-4205	4	WASHER-HARD (7.2X14.5X2MM)
15	8H-1141	4	SHOE-POLE
16	3F-0379	8	SCREW-POLE SHOE (3/8-24)
17	7T-3275	1	ARMATURE
18	3E-7775	1	HOUSING
19	4M-1831	1	PLUG-LEVER HOUSING
20	7L-2894	1	GASKET
21	036-9823	5	BOLT
22	6N-3826	1	DRIVE-MOTOR
23	7T-3974	1	HOUSING-DRIVE
24	7X-3373	6	BOLT (5/16-18X0.88 IN)
25	206-8789	1	KIT-SOLENOID (12V) (STARTING MOTOR) (INCLUDES SOLENOID AS, BOLT & NUTS)
26	6V-8378	3	NUT (10-32)
27	8F-1434	2	LOCKWASHER
28	8T-0328	3	WASHER-HARD (5.5X10X1)
29	9X-4824	1	COVER-STARTING MOTOR
30	8T-9884	1	KIT-INSULATOR (STARTING MOTOR) (SERVICED AS COMPLETE KIT ONLY) (INCLUDES INSULATORS AND BUSHING)
31	8T-9885	1	KIT-BRUSH (STARTING MOTOR) (12 VOLT) (SERVICED AS COMPLETE KIT ONLY) (INCLUDES BRUSHES, SPRINGS, SCREWS, SEAL AND SCREW ASM)
32	7T-3268	1	KIT-LEVER (STARTING MOTOR) (SERVICED AS COMPLETE KIT ONLY) (INCLUDES 2 LEVER ASM, 2 SEALS, NUT, GASKET AND RETAINER)
33	095-7930	1	SCREW-MACHINE
34	096-6166	1	WASHER-HARD (4.5X9X1)
35	9B-7233	1	LOCKWASHER
36	146-3504	1	SWITCH-RELAY (12V) (STARTING MOTOR)
-	7T-3267	1	KIT-BUSHING (STARTING MOTOR)

[A] PART OF 208-0090 STARTING MOTOR GP-ELECTRIC

00888492
PR: t05i29k58b0131

STARTING MOTOR GP-ELECTRIC - 502282D1

12 VOLT
MT855 & MT865

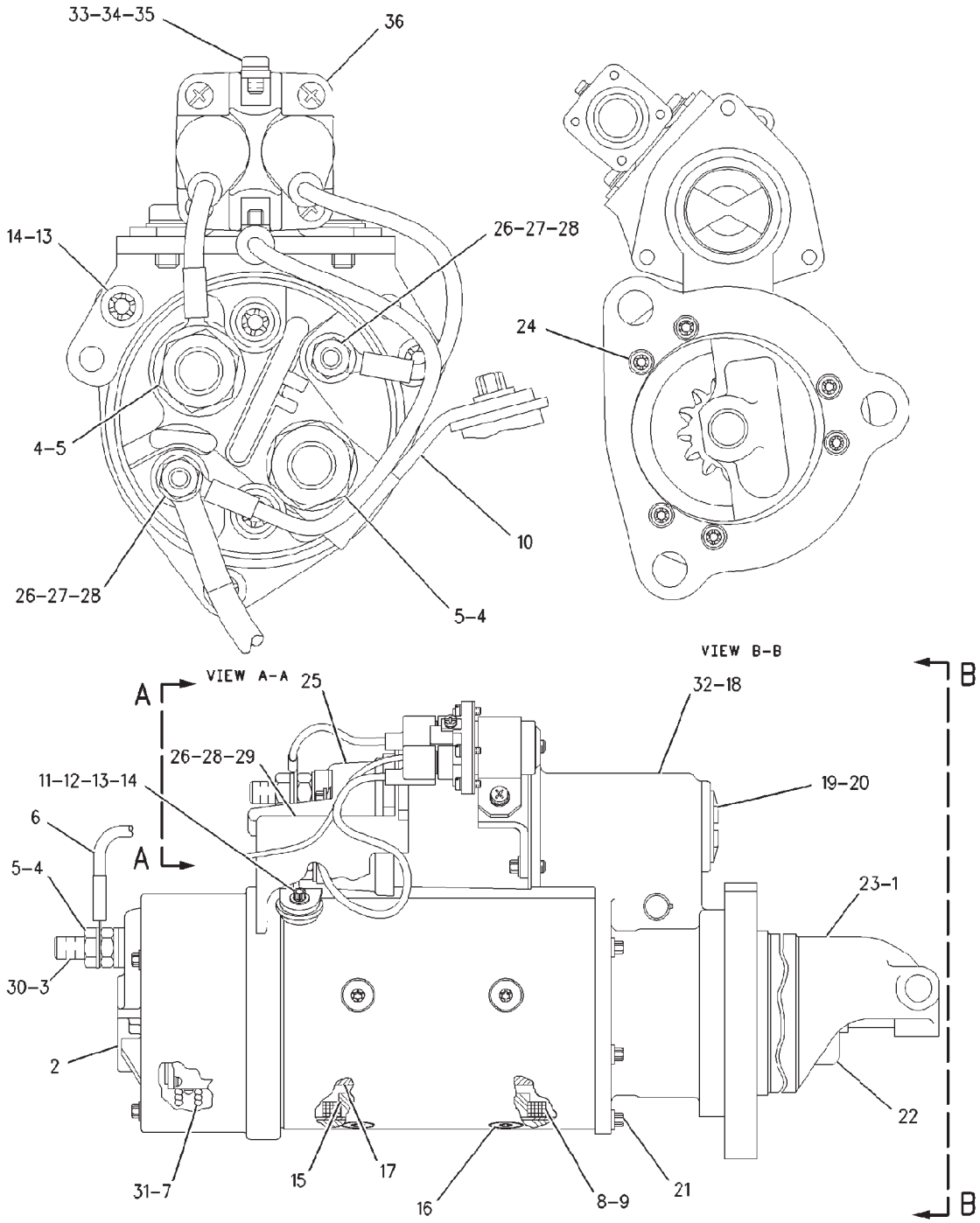

STARTING MOTOR GP-ELECTRIC - 502282D1

12 VOLT
MT855 & MT865

ITEM	NUMBER	QTY	DESCRIPTION
-	502282D1	--	STARTING MOTOR GP-ELECTRIC [A]
1	3T-3434	6	PLUG
2	7T-3279	1	HOUSING
3	8T-8566	1	TERMINAL
4	6V-8188	4	NUT (1/2-13)
5	7X-0562	4	WASHER-HARD (13.5X19X0.8)
6	3T-3422	1	WIRE
7	8T-8570	1	HOLDER-BRUSH
8	8T-8568	1	COIL-FIELD
9	7T-3454	1	INSULATOR
10	7T-3271	1	CONNECTOR
11	7T-3451	1	INSULATOR-TERMINAL
12	8T-8569	1	INSULATOR-TERMINAL
13	5S-7349	4	BOLT (1/4-20X0.5 IN)
14	8T-4205	4	WASHER-HARD (7.2X14.5X2MM)
15	8H-1141	4	SHOE-POLE
16	3F-0379	8	SCREW-POLE SHOE (3/8-24)
17	7T-3275	1	ARMATURE
18	7T-3973	1	HOUSING-LEVER
19	4M-1831	1	PLUG-LEVER HOUSING
20	7L-2894	1	GASKET
21	036-9823	5	BOLT
22	6N-3826	1	DRIVE-MOTOR
23	7T-3974	1	HOUSING-DRIVE
24	7X-3373	6	BOLT (5/16-18X0.88 IN)
25	206-8787	1	KIT-SOLENOID (SERVICED AS COMPLETE KIT ONLY)
26	6V-8378	3	NUT (10-32)
27	8F-1434	2	LOCKWASHER
28	8T-0328	3	WASHER-HARD (5.5X10X1)
29	9X-4824	1	COVER-STARTING MOTOR
30	8T-9884	1	KIT-INSULATOR (STARTING MOTOR) (SERVICED-COMPLETE KIT ONLY) (INCLUDES: INSULATORS AND BUSHING)
31	8T-9885	1	KIT-BRUSH (SERVICED-COMPLETE KIT ONLY) (INCLUDES BRUSHES, SPRINGS, SCREW, SEAL, AND SCREW ASM)
32	7T-3268	1	KIT-LEVER (STARTING MOTOR) (SERVICED-COMPLETE KIT ONLY) (INCLUDES: 2 LEVER ASM, 2 SEALS, NUT, GASKET, AND RETAINER)
33	095-7930	1	SCREW-MACHINE
34	096-6166	1	WASHER-HARD (4.5X9X1)
35	9B-7233	1	LOCKWASHER
36	146-3504	1	SWITCH-RELAY (STARTING MOTOR)
-	7T-3267	1	KIT-BUSHING (STARTING MOTOR) (NOT SHOWN)

[A] PART OF 180-2924 STARTING MOTOR GP-ELECTRIC

00867504
PR: t05i29k58b0132

STARTING MOTOR GP-ELECTRIC - 502283D1

12 VOLT
MT855 & MT865

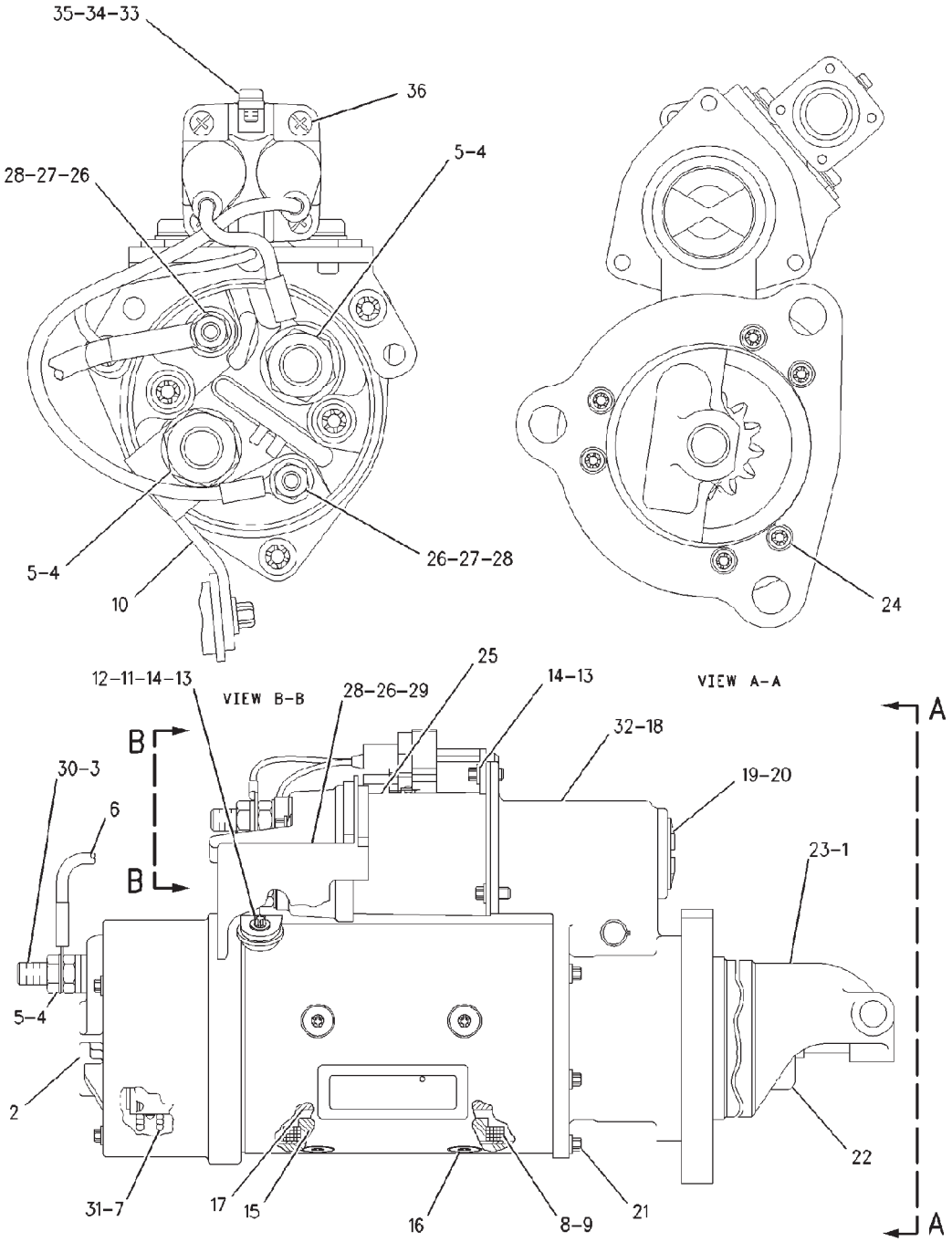

STARTING MOTOR GP-ELECTRIC - 502283D1

12 VOLT
MT855 & MT865

ITEM	NUMBER	QTY	DESCRIPTION
-	502283D1	--	STARTING MOTOR GP-ELECTRIC [A]
1	3T-3434	6	PLUG
2	7T-3279	1	HOUSING
3	8T-8566	1	TERMINAL
4	6V-8188	4	NUT (1/2-13)
5	7X-0562	4	WASHER-HARD (13.5X19X0.8)
6	3T-3422	1	WIRE
7	8T-8570	1	HOLDER-BRUSH
8	8T-8568	1	COIL-FIELD
9	7T-3454	1	INSULATOR
10	7T-3271	1	CONNECTOR
11	7T-3451	1	INSULATOR-TERMINAL
12	8T-8569	1	INSULATOR-TERMINAL
13	5S-7349	4	BOLT (1/4-20X0.5 IN)
14	8T-4205	4	WASHER-HARD (7.2X14.5X2MM)
15	8H-1141	4	SHOE-POLE
16	3F-0379	8	SCREW-POLE SHOE (3/8-24)
17	7T-3275	1	ARMATURE
18	3E-7775	1	HOUSING
19	4M-1831	1	PLUG-LEVER HOUSING
20	7L-2894	1	GASKET
21	036-9823	5	BOLT
22	6N-3826	1	DRIVE-MOTOR
23	7T-3974	1	HOUSING-DRIVE
24	7X-3373	6	BOLT (5/16-18X0.88 IN)
25	206-8787	1	KIT-SOLENOID (SERVICED AS COMPLETE KIT ONLY)
26	6V-8378	3	NUT (10-32)
27	8F-1434	2	LOCKWASHER
28	8T-0328	3	WASHER-HARD (5.5X10X1)
29	9X-4824	1	COVER-STARTING MOTOR
30	8T-9884	1	KIT-INSULATOR (STARTING MOTOR) (SERVICED AS COMPLETE KIT ONLY) (INCLUDES: INSULATORS AND BUSHING)
31	8T-9885	1	KIT-BRUSH (SERVICED-COMPLETE KIT ONLY) (INCLUDES BRUSHES, SPRINGS, SCREW, SEAL, AND SCREW ASM)
32	7T-3268	1	KIT-LEVER (STARTING MOTOR) (SERVICED-COMPLETE KIT ONLY) (INCLUDES: 2 LEVER ASM, 2 SEALS, NUT, GASKET, AND RETAINER)
33	095-7930	1	SCREW-MACHINE
34	096-6166	1	WASHER-HARD (4.5X9X1)
35	9B-7233	1	LOCKWASHER
36	146-3504	1	SWITCH-RELAY (STARTING MOTOR)
	7T-3267	1	KIT-BUSHING (STARTING MOTOR)

[A] PART OF 180-2924 STARTING MOTOR GP-ELECTRIC

00867507
PR: t05i29k58b0133

SWITCH GP-GUIDANCE - 500606D1

AUTOGUIDE SYSTEM

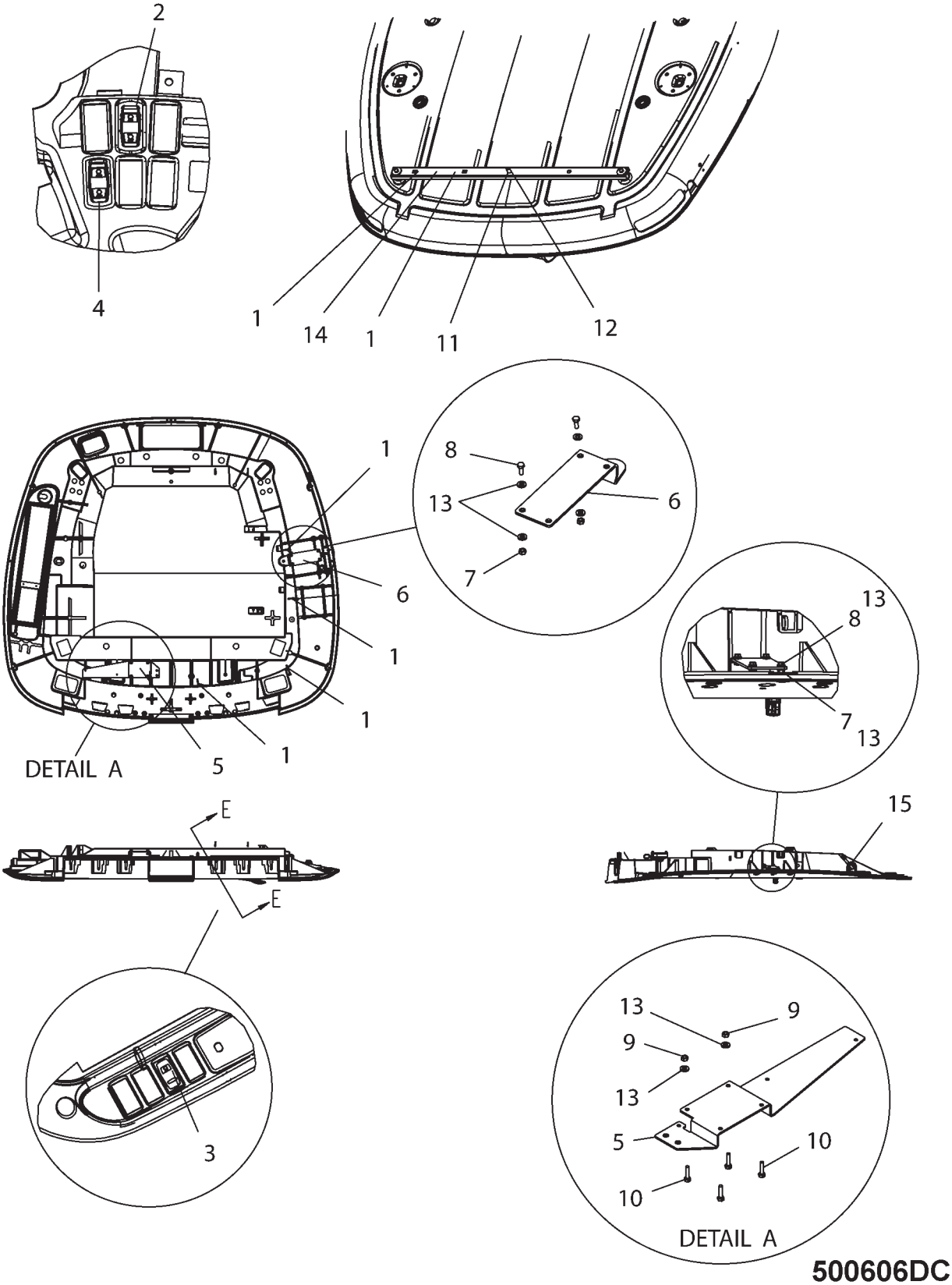

500606DC

SWITCH GP-GUIDANCE - 500606D1

AUTOGUIDE SYSTEM

ITEM	NUMBER	QTY	DESCRIPTION
-	500606D1	--	SWITCH GP-RECEIVER [A] (NOT SERVICED)
1	CH7K-1181	6	STRAP-CABLE
2	169-8222	1	SWITCH ASM-ROCKER (AUTO GUIDE CONTROL)
	400453X1		PLUG-CONNECTOR
	CH165-5975		PLUG-PANEL (FOR COVERING MTG HOLE)
3	500882D1	1	SWITCH ASM-ROCKER (AUTO GUIDE POWER)
	400453X1		PLUG-CONNECTOR
	CH165-5975		PLUG-PANEL (FOR COVERING MTG HOLE)
4	200-6376	1	SWITCH ASM-ROCKER (AUTO GUIDE MARKING)
	400453X1		PLUG-CONNECTOR
	CH165-5975		PLUG-PANEL (FOR COVERING MTG HOLE)
5	216-8860	1	BRACKET ASM
6	219-4775	1	BRACKET ASM
7	400300X1	4	NUT (M6X1)
8	400152X1	4	BOLT (M6X1X16MM)
9	CH6V-8225	4	NUT (M6X1)
10	400172X1	4	BOLT (M6X1X25MM)
11	400179X1	1	BOLT (5/8-11)
12	CH8T-4122	1	WASHER-HARD
13	CH8T-4205	12	WASHER-HARD (7.2X14.5X2MM)
14	500478D1	1	MOUNTING GP-GPS
			(SEE BREAKDOWN FOR COMPONENTS)
15	500610D1	1	GROMMET-RH (HANDRAIL) (REPLACES
			PART PROVIDED IN ROOF GP-CAB)

[A] PART OF 500628D1 CONTROL GP-COMMUNICATION

500606DC
PR: t05i29k58b0134

NO ILLUSTRATION

NOTIF

ITEM	NUMBER	QTY	DESCRIPTION
-	500389D1	--	SERVICE GP-AUTOGUIDE
1	500392D1	1	HARNESS AS-SERIAL
2	72571023	1	SERVICE TOOL-AUTOGUIDE (ORDER ON AGCO DEALER INFO NET)
3	503754D1	1	HARNESS-COM 3 SERIAL CABLE
	502013D1	1	HARNESS-COM, CAB
	502014D1	1	HARNESS-COM, RECEIVER
4	72571005	1	MANUAL-SERVICE TOOL-AUTO GUIDE (ORDER ON AGCO DEALER INFO NET)

NOTIF
PR: t05i29k58b0135

MOUNTING GP-GPS - 500478D1
AUTOGUIDE SYSTEM

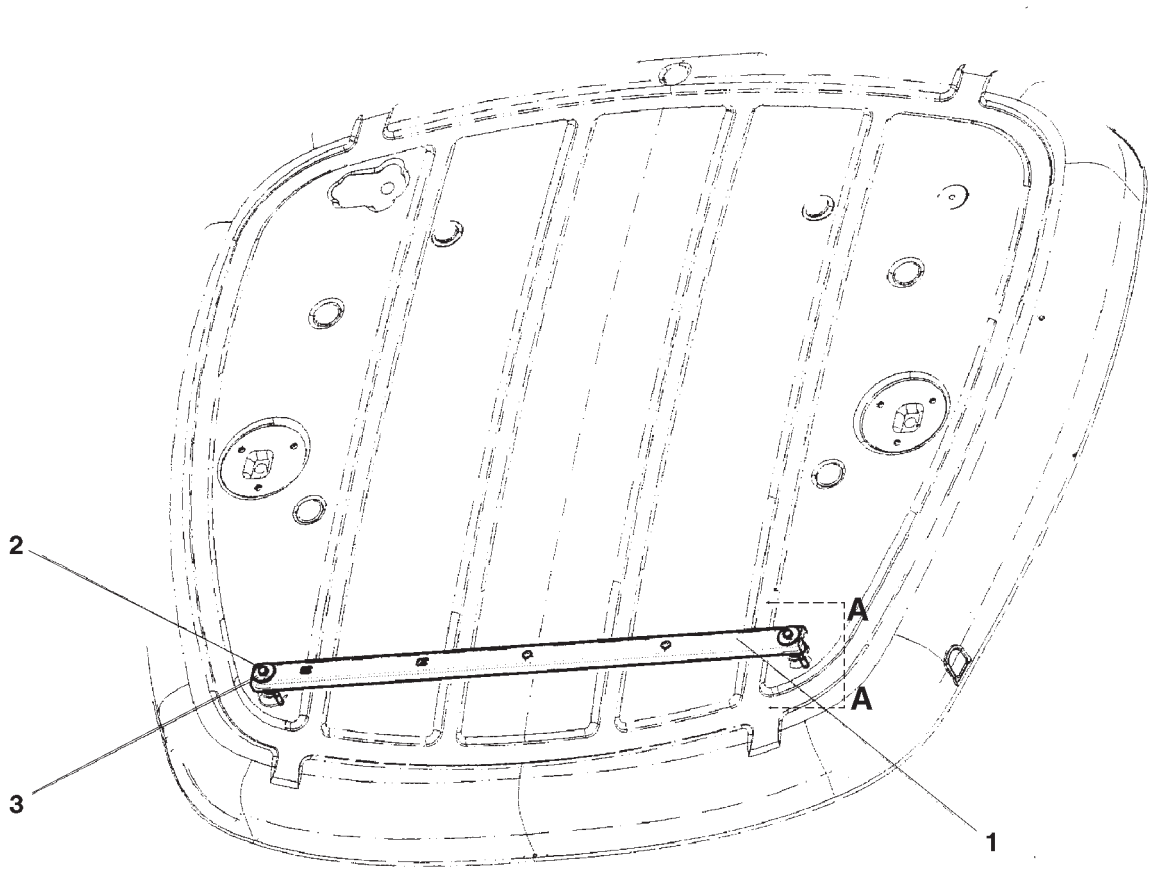

SEE A-A

MOUNTING GP-GPS - 500478D1
AUTOGUIDE SYSTEM

ITEM	NUMBER	QTY	DESCRIPTION
-	500478D1	--	MOUNTING GP [A] (NOT SERVICED)
1	500477D1		BRACKET ASM (INCLUDES ITEMS 4 AND 5)
2	400240X1	2	BOLT (M10X1.5X110)
3	CH8T-4226	2	WASHER-PLATED
4	500475D1	2	SPACER
5	500476D1	1	BRACKET

[A] PART OF 500606D1 SWITCH GP

0890702M
PR: t05i29k58b0136

MOUNTING GP-KIT - 187-4896

AUX ANTENNA & NON-AUTOGUIDE GPS RECEIVER

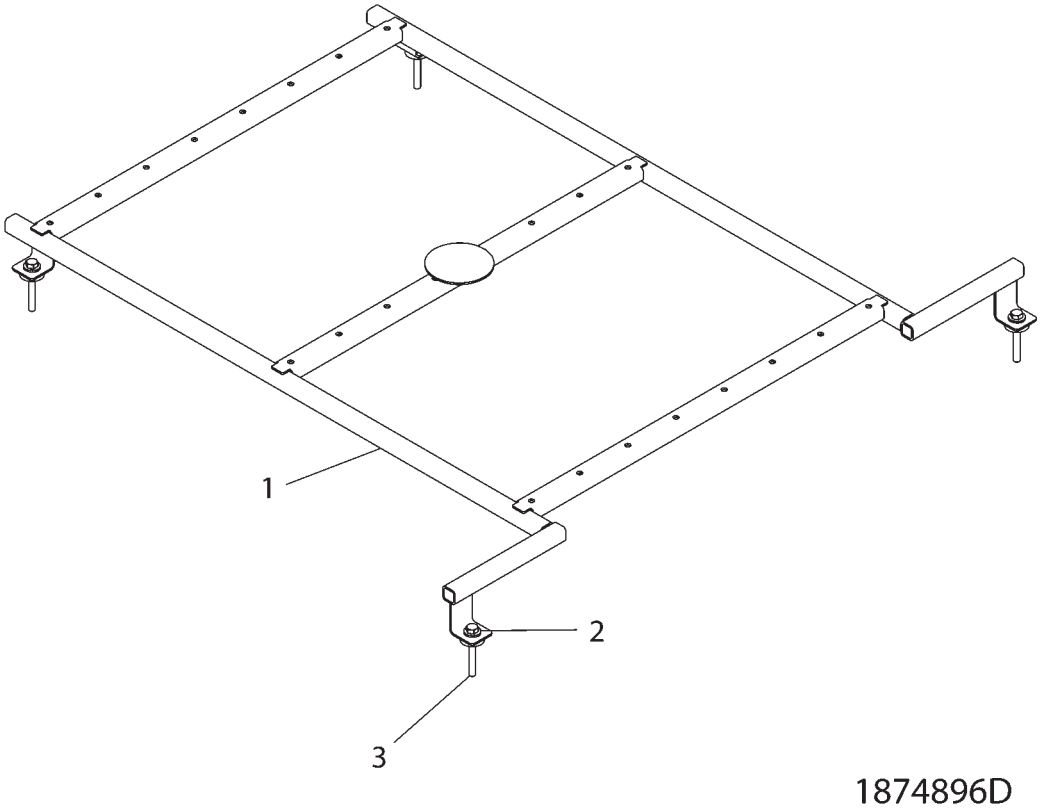

MOUNTING GP-KIT - 187-4896

AUX ANTENNA & NON-AUTOGUIDE GPS RECEIVER

ITEM	NUMBER	QTY	DESCRIPTION
-	187-4896	--	MOUNTING GP (KIT)
1	168-2291	1	RACK ASM
2	CH7X-7729	4	WASHER (11X25X3)
3	400044X1	4	BOLT (M10X1.5X80)

1874896D
PR: t05i29k58b0137

SWITCH GP-WIPER - CH135-9967
INTERMITTENT 12 VOLT

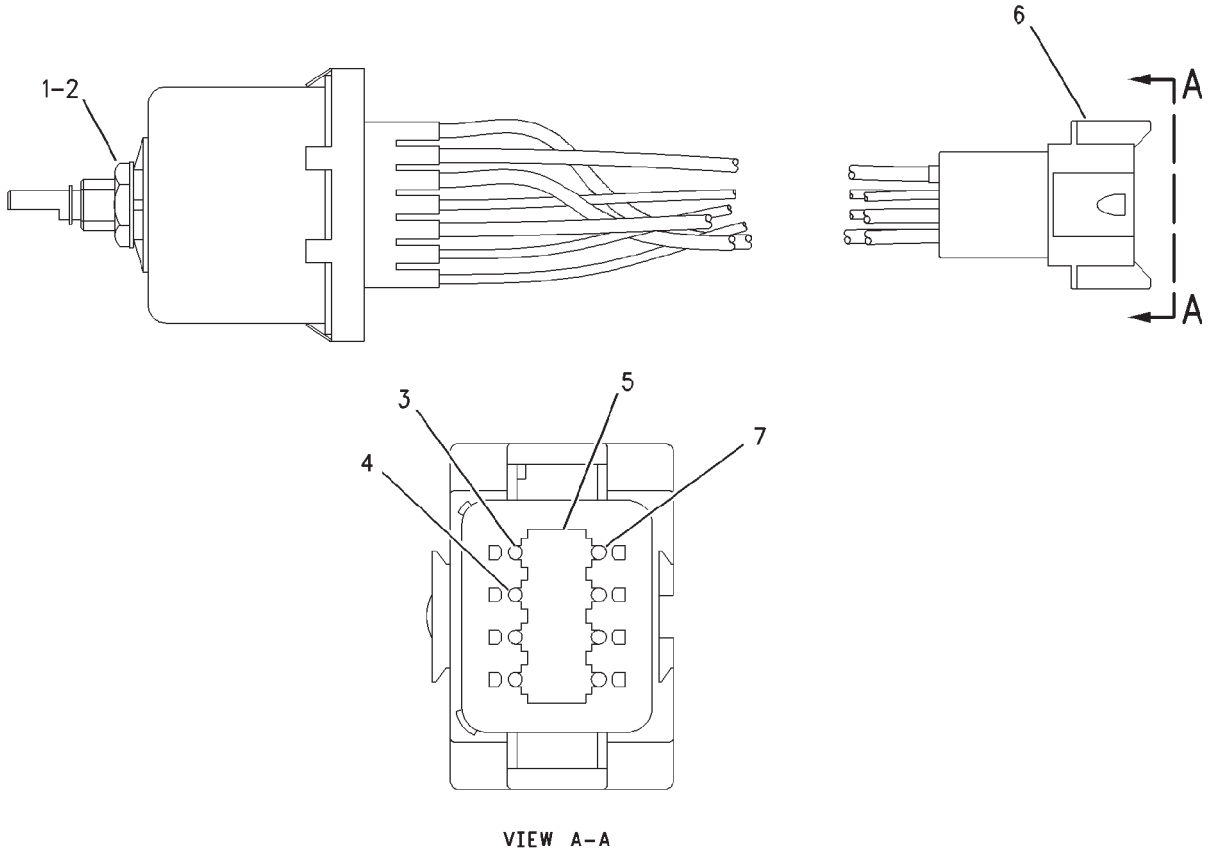

SWITCH GP-WIPER - CH135-9967

INTERMITTENT 12 VOLT

ITEM	NUMBER	QTY	DESCRIPTION
-	CH135-9967	--	SWITCH AS-WIPER [A]
1	CH6V-8369	1	NUT (7/16-28)
2	CH2H-3920	1	LOCKWASHER (11.38MM ID)
3	CH8T-8737	1	PLUG-SEAL
4	400562X1	3	PIN-CONNECTOR
5	CH3E-3389	1	WEDGE-RECEPTACLE LOCK
6	CH102-8806	1	KIT-RECEPTACLE (8 PIN) (INCLUDES RECEPTACLE ASM AND WEDGE) (SERVICED AS COMPLETE KIT ONLY)
7	400861X1	4	PIN-CONNECTOR

[A] PART OF 196-3968 WIPER GP-WINDOW

00673034
PR: t05i29k58b0138

RECEIVER KIT-TRANSMITTER - 162-4099

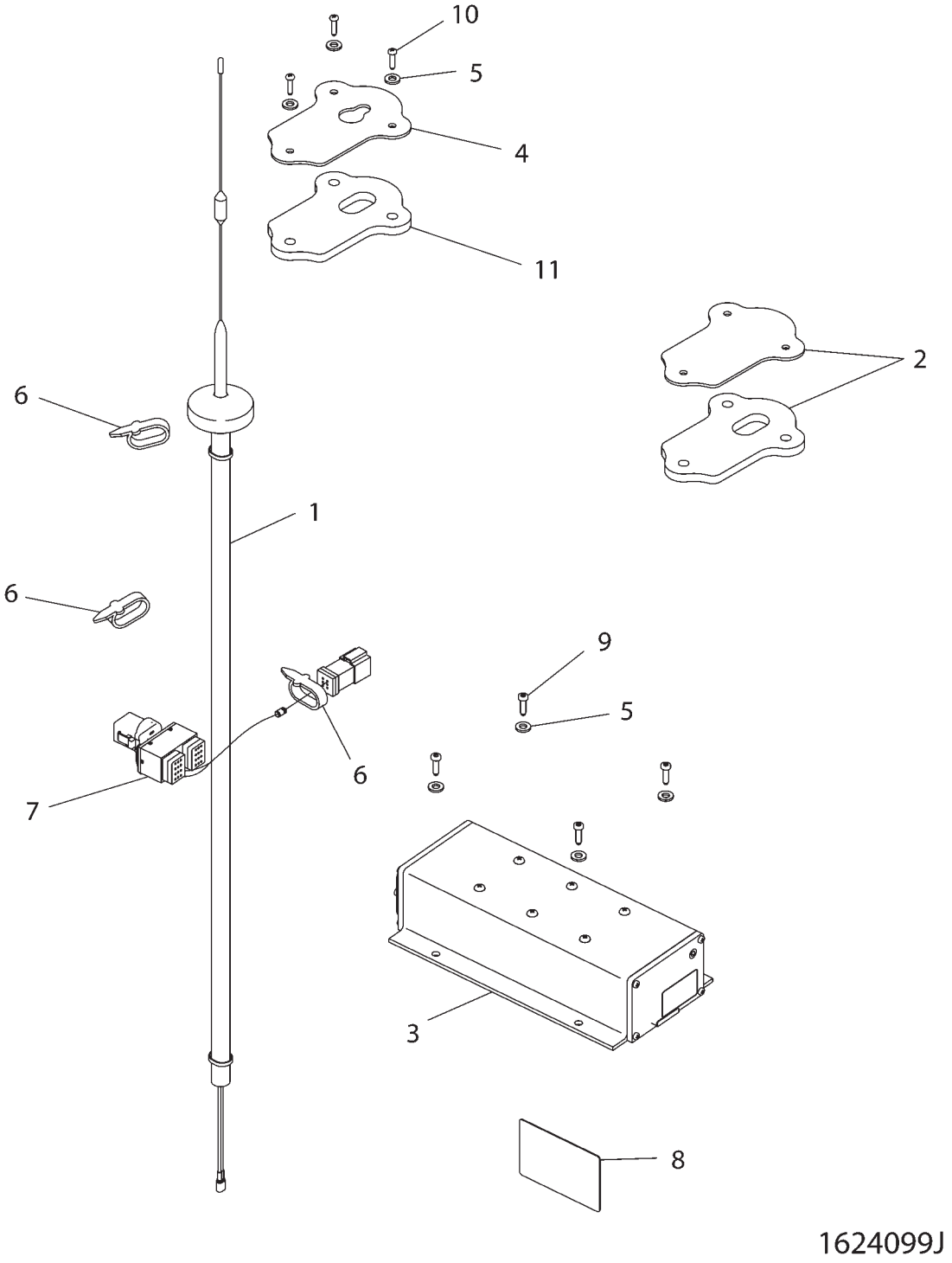

RECEIVER KIT-TRANSMITTER - 162-4099

ITEM	NUMBER	QTY	DESCRIPTION
	162-4099	--	RECEIVER KIT-TRANSMITTER
1	CH207-6797	1	ANTENNA AS.-ROOF(GPS/VHF
2	142-9831	1	COVER KIT-CAB
	500679D1	1	PLATE
	500682D1	1	GASKET-COVER (PL201 ANTENNA)
3	CH209-6417	1	CONTROL GP-ELECTRONIC
4	500680D1	1	BRACKET
5	CH8T-4205	7	WASHER-HARD 7.2IDX14.5ODX2MM
6	400837X1	4	STRAP-CABLE (PLASTIC)
7	502176D1	1	HARNESS AS.
8	CH185-7141	1	FILM-WARN (LINK RADIO)
9	CH110-2028	4	SCREW-NO10-14X19MM PAN,THD CTG
10	CH8T-9501	3	SCREW-10-16X19.05 PAN,THD FMG
11	500682D1	1	GASKET-COVER (PL201 ANTENNA)

1624099J
PR: t05i29k58b0139

MOUNTING GP-PDA - 501168D1
AUTOGUIDE SYSTEM

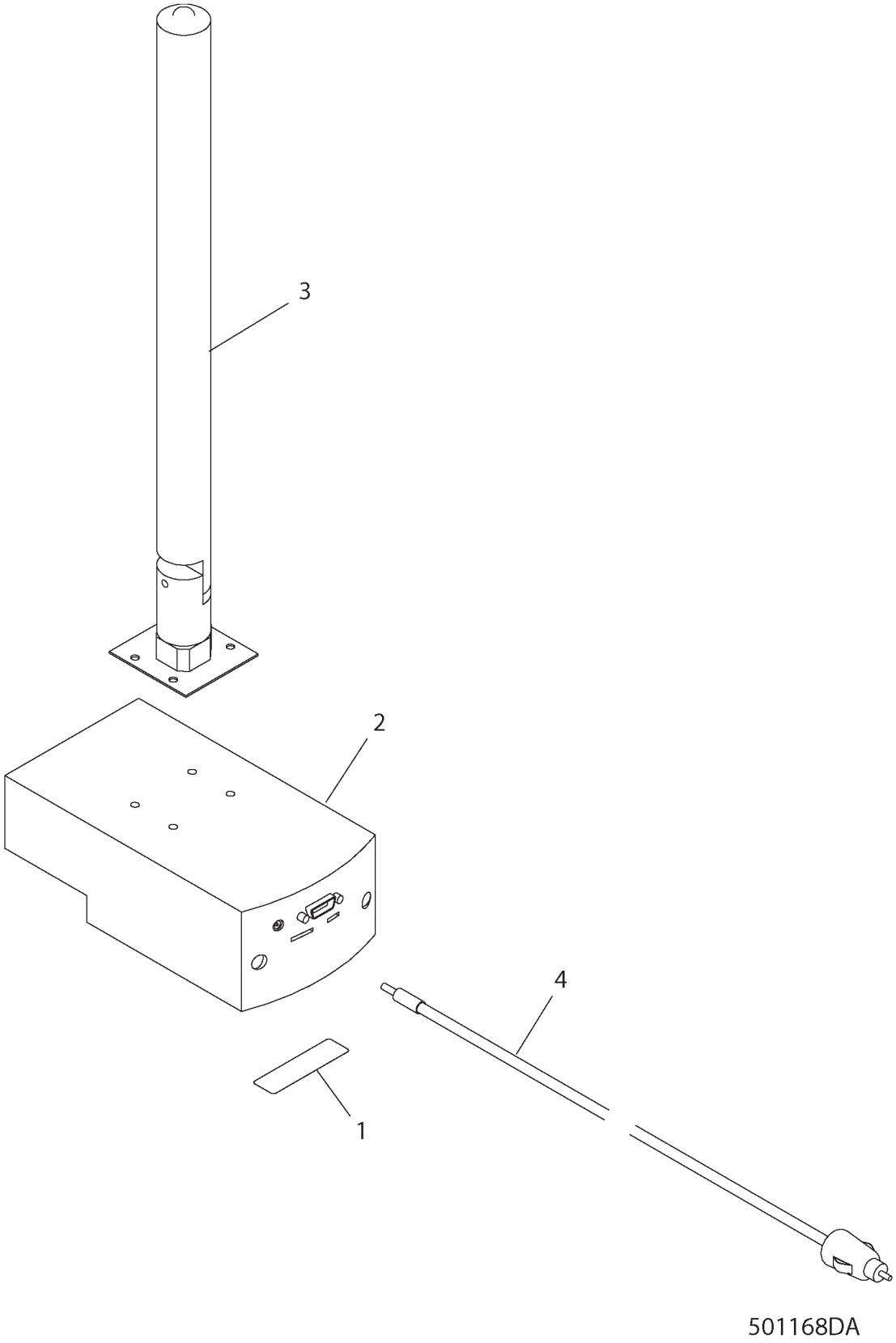

MOUNTING GP-PDA - 501168D1

AUTOGUIDE SYSTEM

ITEM	NUMBER	QTY	DESCRIPTION
-	501168D1	--	MOUNTING GP-PDA
1	500367D1	1	FILM-AUTOGUIDE
2	501169D1	1	CRADLE GP
3	501170D1	1	ARM
4	501171D1	1	CABLE-ADAPTOR PLUG

501168DA
PR: t05i29k58b0140

KIT-GPS BASE STATION - 502609D1

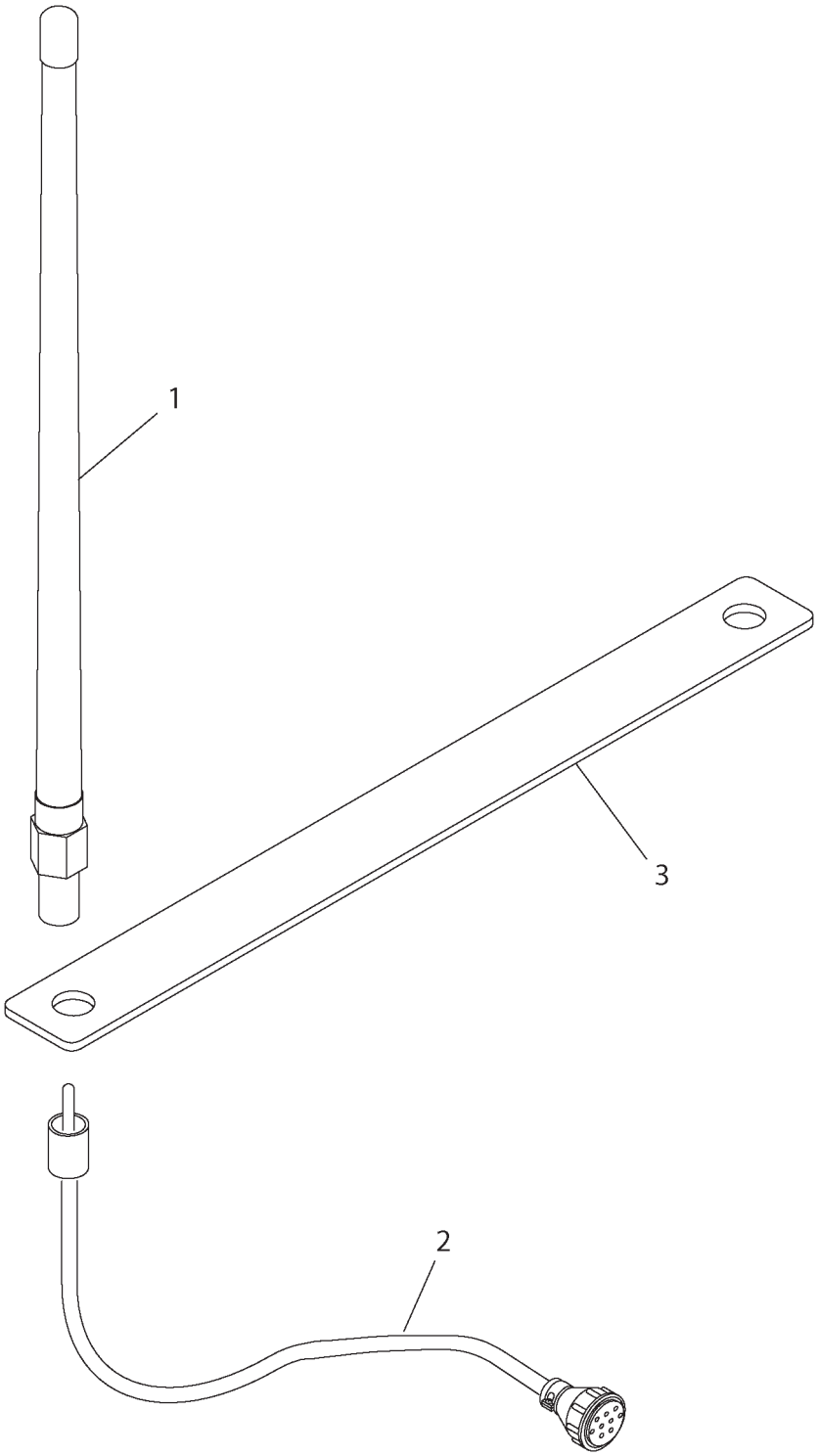

KIT-GPS BASE STATION - 502609D1

ITEM	NUMBER	QTY	DESCRIPTION
-	502609D1	--	KIT-GPS BASE STATION
1	501073D1	1	ANTENNA AS-DATA RADIO
2	501074D1	1	CABLE AS
3	501075D1	1	BRACKET
4	72571006	1	SOFTWARE (NOT SHOWN) (ORDER FROM AGCO DEALER INFO NET)
5	502610D1	1	RECEIVER GP-GPS BASE STATION (NOT SHOWN)
6	502611D1	1	HARNESS AS-GPS BASE PWR (NOT SHOWN)
7	502612D1	1	CASE AS-GPS BASE (NOT SHOWN)
-	232-0879	1	TRIPOD AS (NOT PART OF KIT) (SERVICED AS COMPLETE AS)

501124DA
PR: t05i29k58b0141

ANTENNA GP-DATA RADIO - 501124D1

GPS BASE STATION

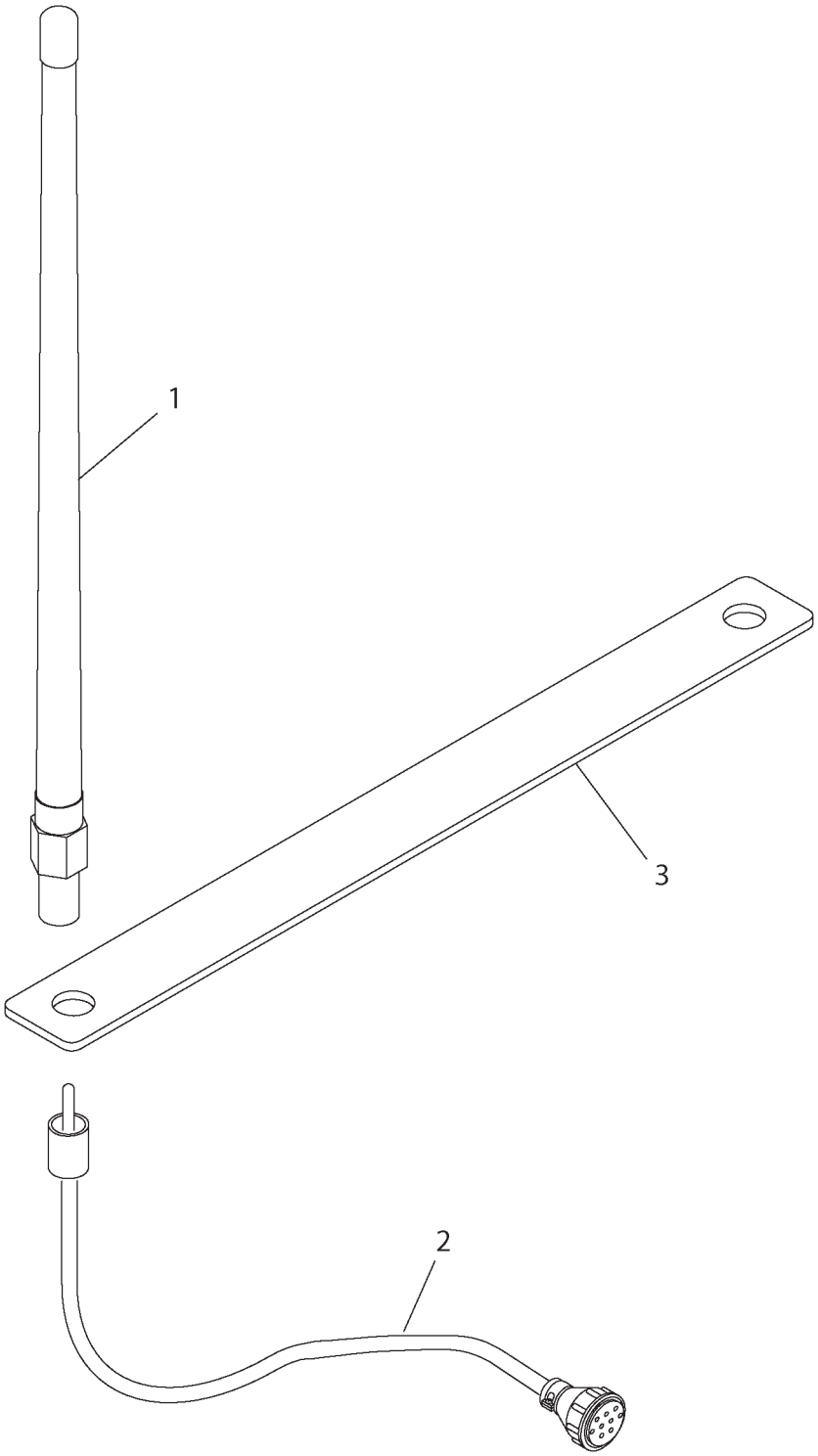

ANTENNA GP-DATA RADIO - 501124D1

GPS BASE STATION

ITEM	NUMBER	QTY	DESCRIPTION
-	501124D1	--	ANTENNA GP-DATA RADIO
1	501073D1	1	ANTENNA AS-DATA RADIO
2	501074D1	1	CABLE AS
3	501075D1	1	BRACKET

501124DA
PR: t05i29k58b0142

RECEIVER GP-TRANSMITTER & GPS - 500607D1
AUTOGUIDE CONTROL

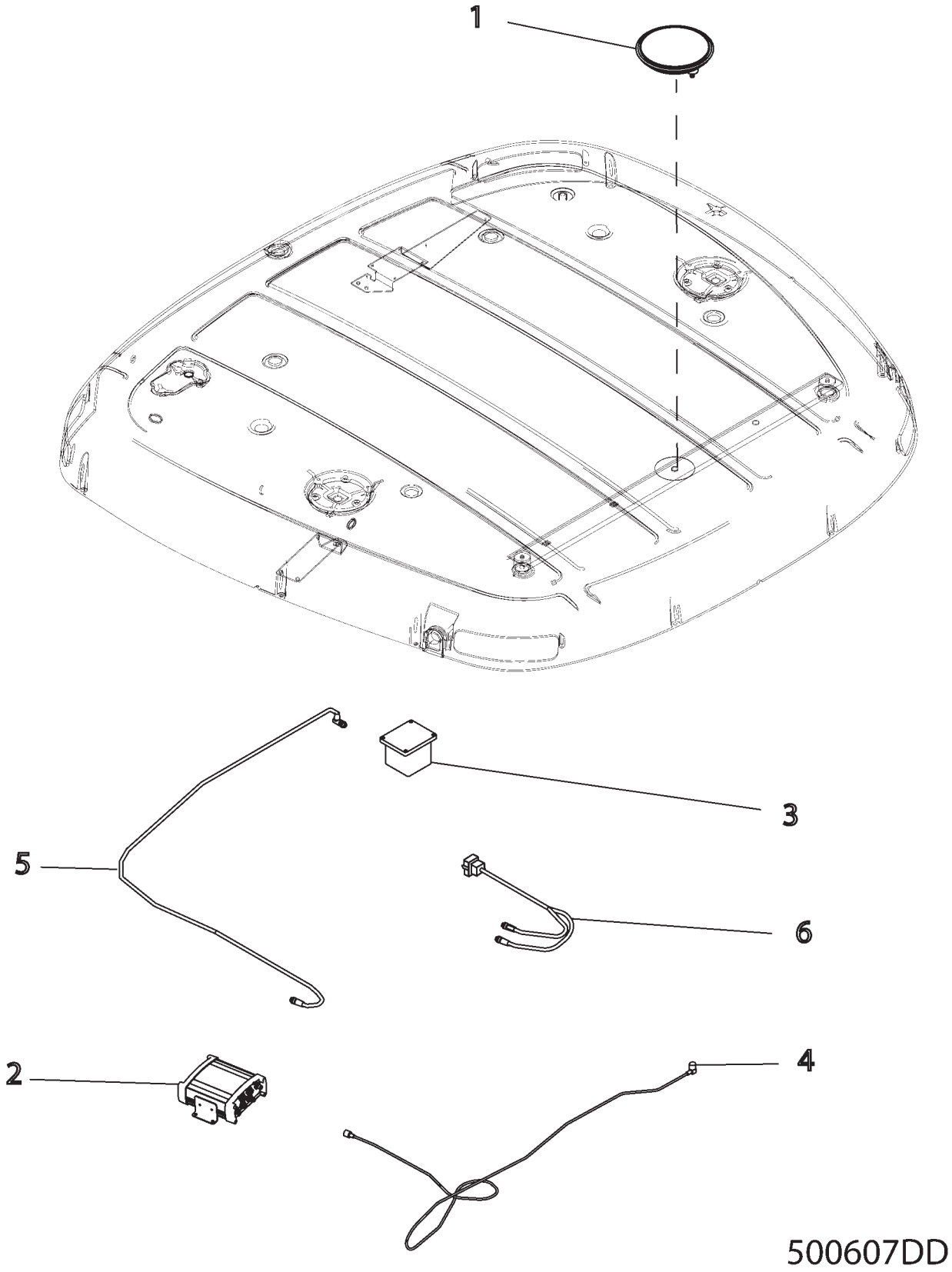

RECEIVER GP-TRANSMITTER & GPS - 500607D1

AUTOGUIDE CONTROL

ITEM	NUMBER	QTY	DESCRIPTION
-	500607D1	--	RECEIVER GP-TRANSMITTER GPS [A]
1	216-7835	1	MOUNT (ANTENNA)
2	216-7837	1	RECEIVER MODULE
3	72571008	1	SENSOR GP-DMU (3AXIS)
4	216-7836	1	CABLE (ANTENNA)
5	216-7839	1	HARNESS (SENSOR GP-POSITION)
6	216-7841	1	HARNESS (RECEIVER-GPS)
7	72571022	1	SOFTWARE (NOT SHOWN) (ORDER FROM DEALER INFO NET)

[A] PART OF 500628D1 & 500630D1 CONTROL AR-AUTOGUIDE

500607DD
PR: t05i29k58b0143

VALVE GP-ETHER - 210-8961

MT835 & MT845

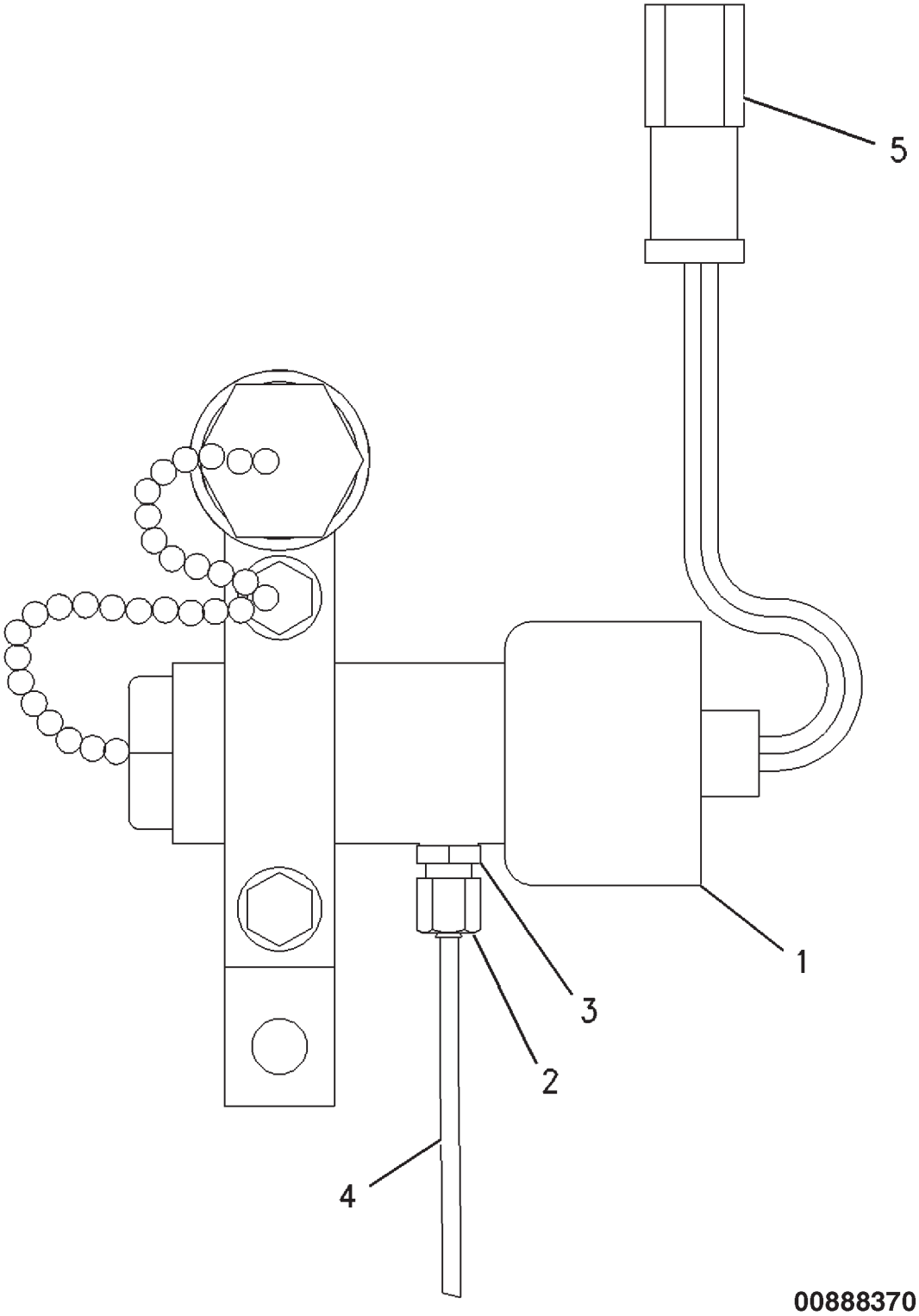

VALVE GP-ETHER - 210-8961

MT835 & MT845

ITEM	NUMBER	QTY	DESCRIPTION
-	210-8961	--	VALVE GP-ETHER [A]
1	210-3931	1	VALVE-ETHER
2	210-8519	1	NUT
3	210-8521	1	FITTING
4	210-3933	AR	TUBE (64 cm)
5	CH102-8802	1	KIT-RECEPTACLE (2 PIN) (INCLUDES WEDGE AND RECEPTACLE ASM) (SERVICED AS COMPLETE KIT ONLY)

[A] PART OF 186-1671 STARTING AIDR GP-ETHER

00888370
PR: t05i29k58b0144

VALVE GP-ETHER - 211-8220

MT855 & MT865

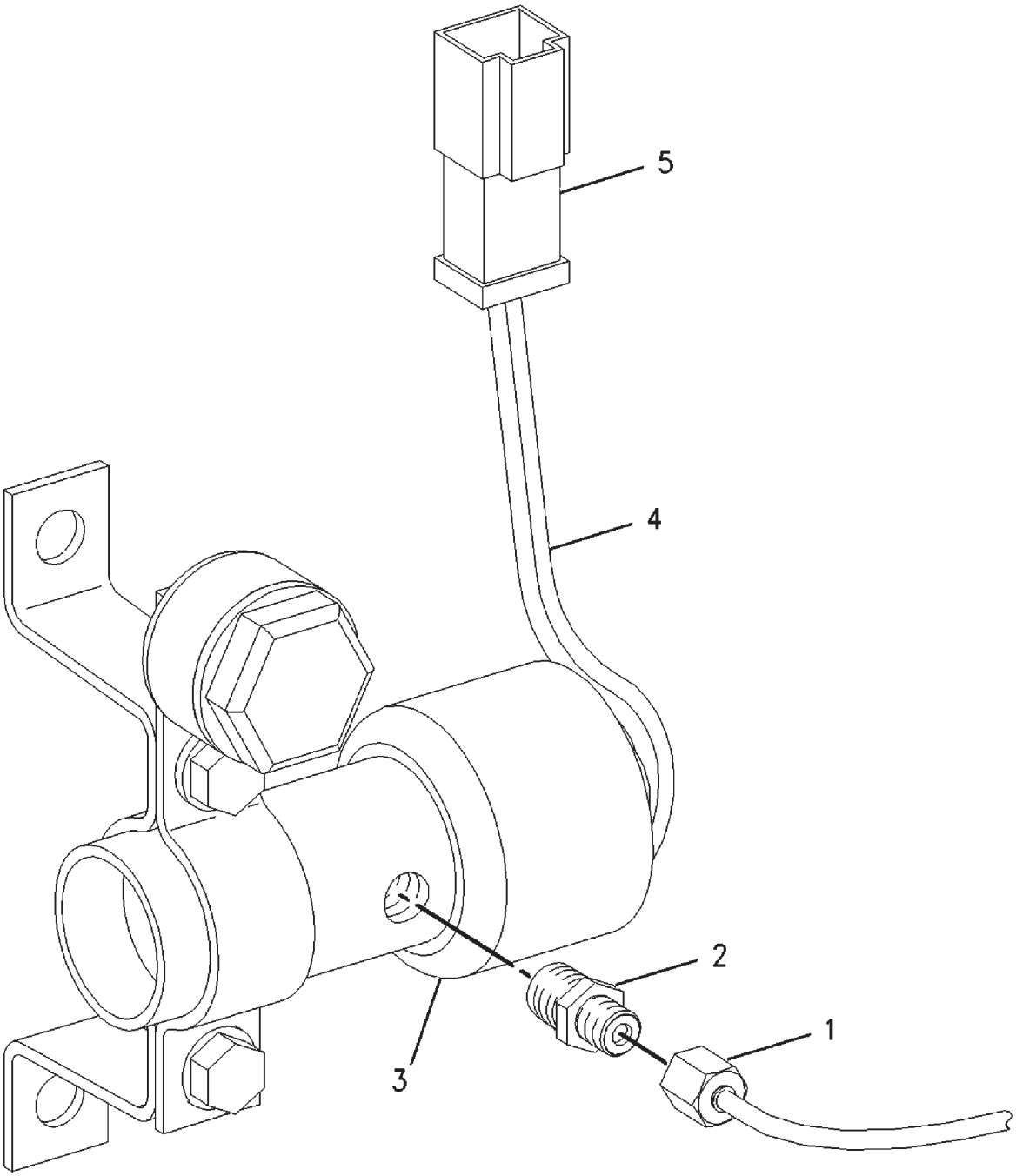

00878638

VALVE GP-ETHER - 211-8220

MT855 & MT865

ITEM	NUMBER	QTY	DESCRIPTION
-	211-8220	--	VALVE GP-ETHER [A]
1	210-8519	1	NUT
2	210-8521	1	FITTING
3	211-8222	1	VALVE-ETHER
4	210-3933		TUBE (64CM)
5	CH102-8802	1	KIT-RECEPTACLE (2 PIN) (INCLUDES RECEPTACLE ASM AND WEDGE) (SERVICED AS COMPLETE KIT ONLY)

[A] PART OF 187-1740 AID GP-ETHER START

00878638
PR: t05i29k58b0145

WARNING GP-BACKUP - 195-5968

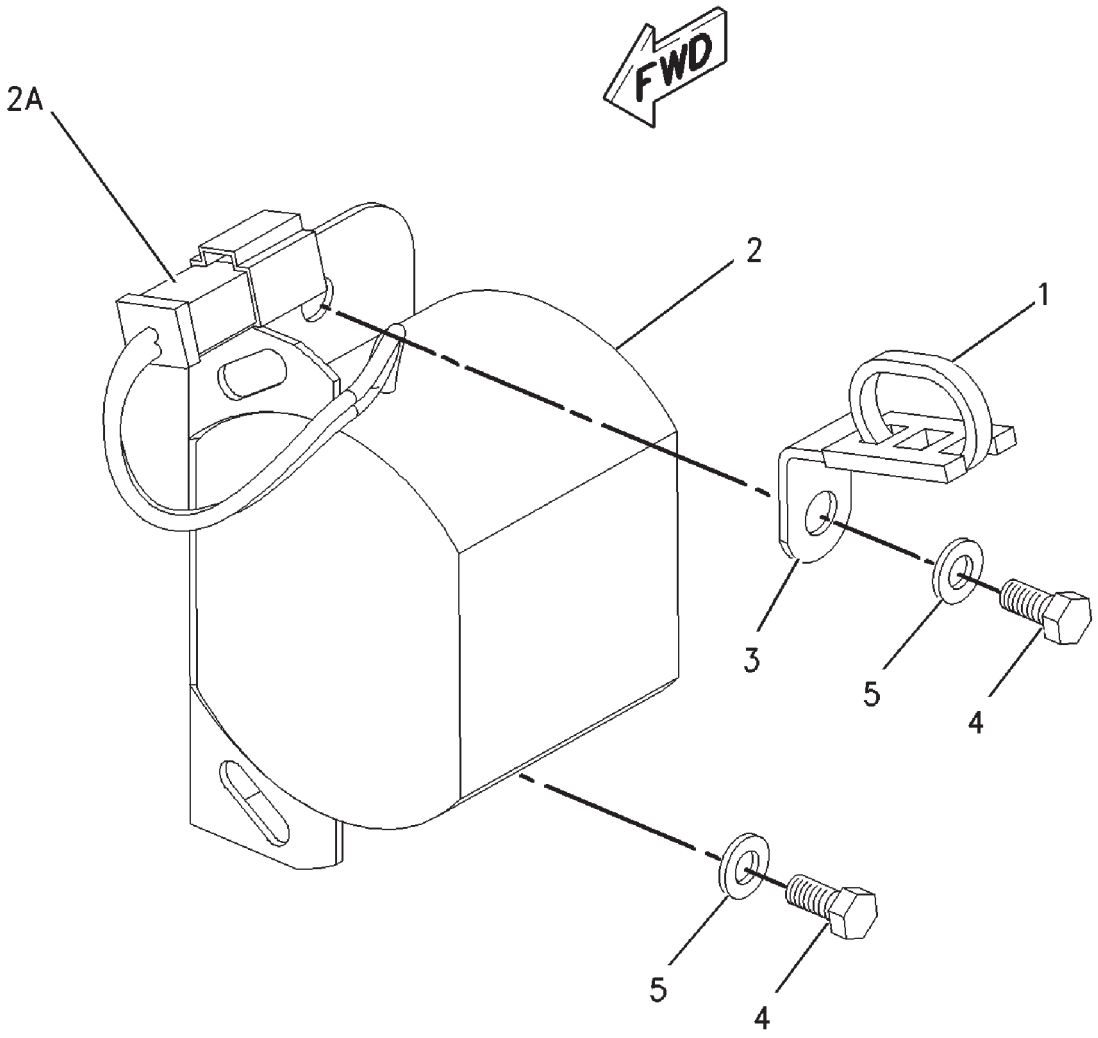

00743485

WARNING GP-BACKUP - 195-5968

ITEM	NUMBER	QTY	DESCRIPTION
-	502759D1	--	WARNING GP-BACKUP (FIELD INSTALLED)
-	502770D1	--	WARNING GP-BACKUP (FACT) (NOT SERVICED, ORDER FIELD INSTALLED)
-	195-5968	--	WARNING GP-BACKUP [A]
1	CH7K-1181	1	STRAP-CABLE
2	CH154-5428	1	ALARM-BACK UP
2A	CH102-8802	1	KIT-RECEPTACLE (2 PIN) (INCLUDES RECEPTACLE ASM AND WEDGE) (SERVICED AS COMPLETE KIT ONLY)
3	CH156-6175	1	CLIP
4	400152X1	2	BOLT (M6X1X16MM)
5	CH5P-4115	2	WASHER-HARD (7.2X19X2)

[A] PART OF 502759D1;502770D1 WARNING GP

00743485
PR: t05i29k58b0146

WIRING GP REMOTE CONTROL - 173-6505

ROW & SPECIAL APPLICATIONS

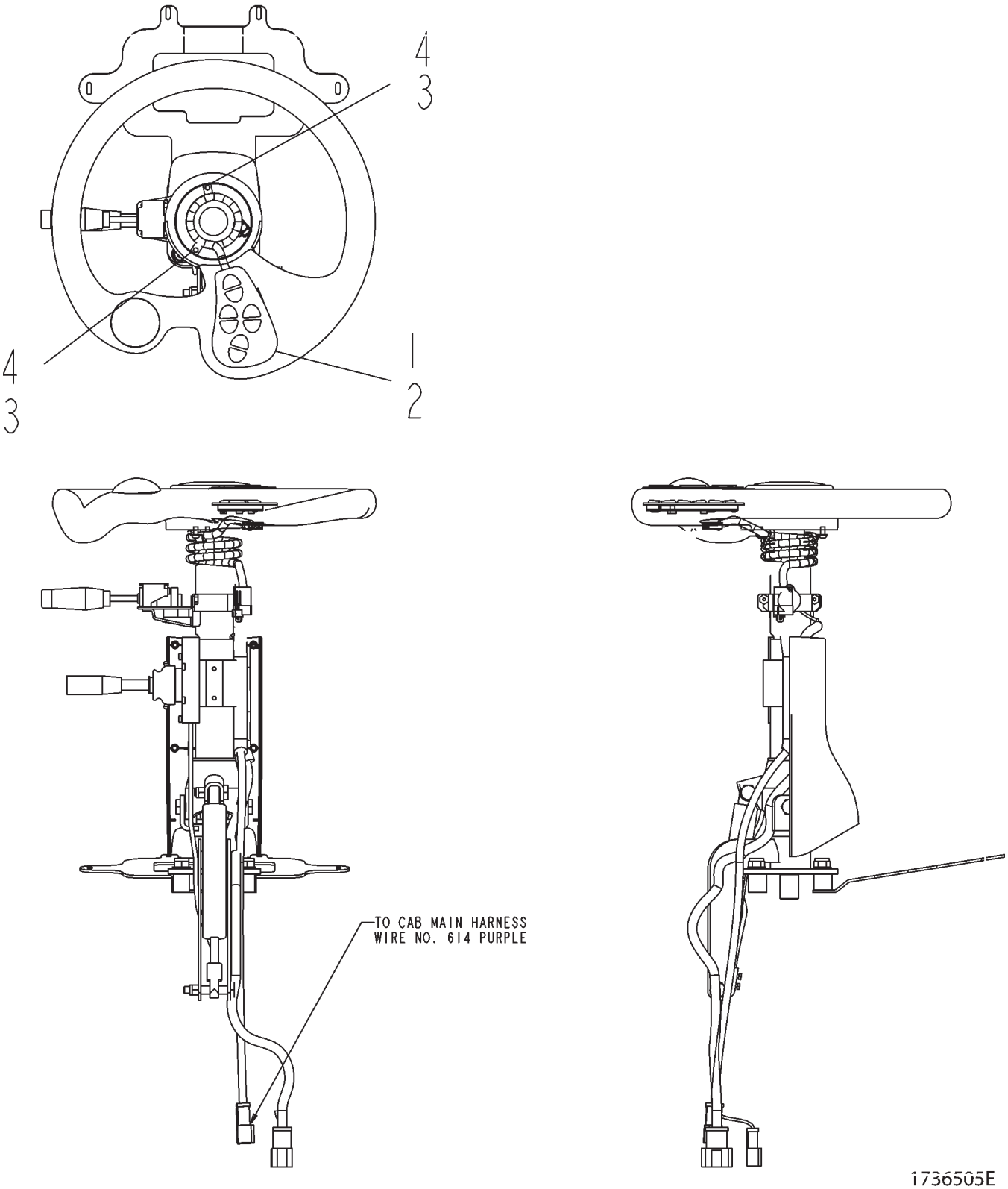

WIRING GP REMOTE CONTROL - 173-6505

ITEM	NUMBER	QTY	DESCRIPTION
-	173-6505	--	WIRING GP [A] (NOT SERVICED)
1	502244D1	1	HARNESS-RADIO (REMOTE CONTROL)
2	172-8035	1	SWITCH (STEERING WHEEL RADIO CONTROLS)
3	CH208-9482	2	CLIP
4	CH095-0736	2	SCREW-MACHINE (M5X0.8X10MM)

[A] STEERING WHEEL MOUNTED RADIO CONTROLS

1736505E
PR: t05i29k58b0147

WIRING GP - 214-3504
AUTOGUIDE ISO COMPATIBLE

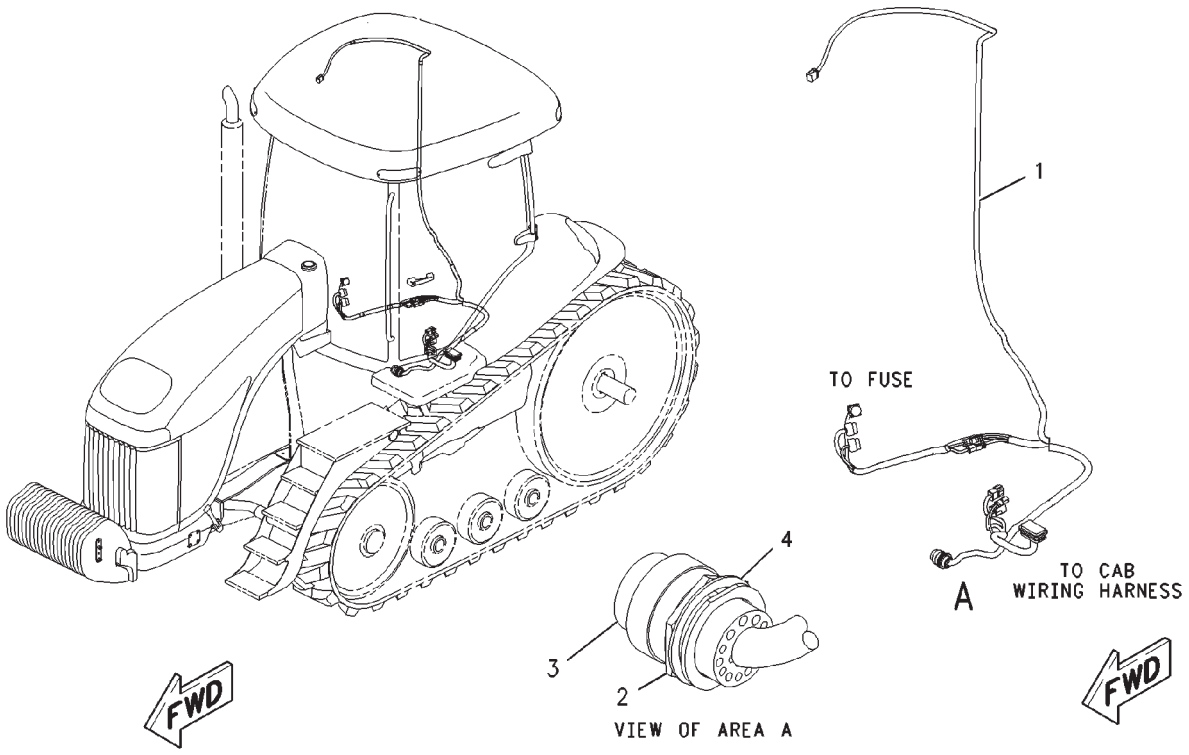

00895779

WIRING GP - 214-3504
AUTOGUIDE ISO COMPATIBLE

ITEM	NUMBER	QTY	DESCRIPTION
-	214-3504	--	WIRING GP (NOT SERVICED)
1	500910D1	1	HARNESS ASM (ISO)
2	400295X1	1	NUT (1 11/16-18 UNEF-2B)
3	CH219-0664	1	CAP
4	CH128-4249	1	LOCKWASHER

00895779
PR: t05i29k58b0148

WIRING GP-AUXILIARY - 162-4097

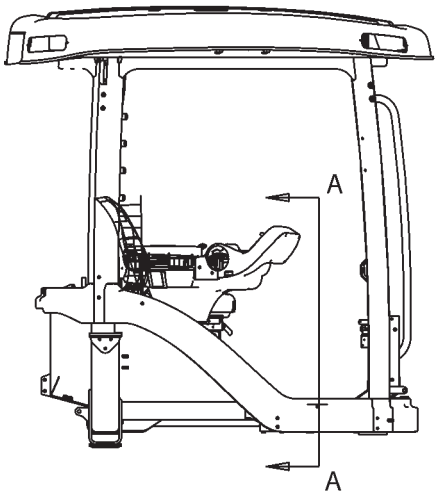

RIGHT SIDE VIEW OF CAB

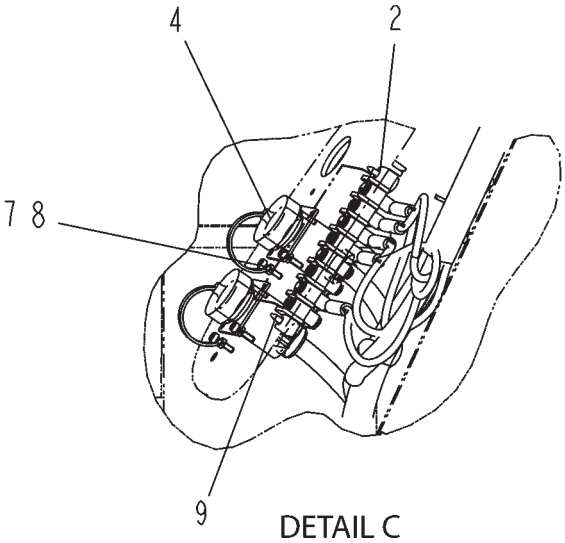

DETAIL C

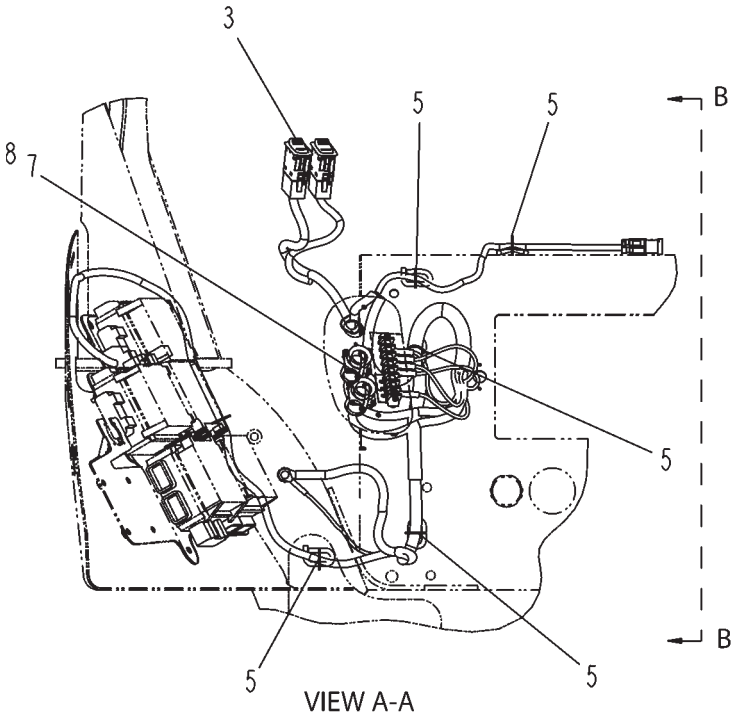

VIEW A-A
(SEAT NOT SHOWN)

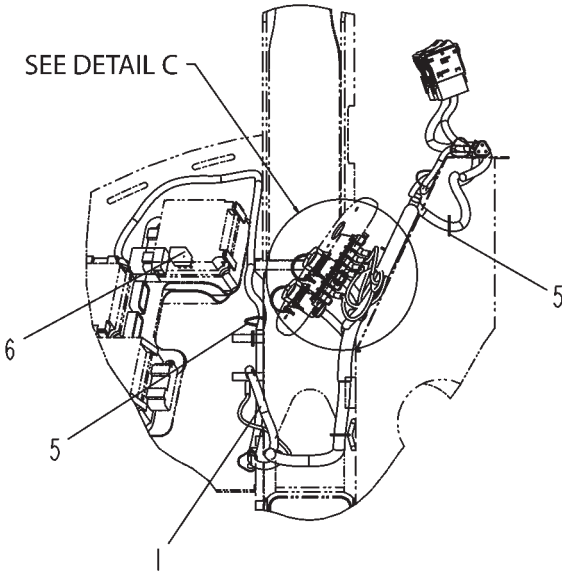

VIEW B-B

1624097F

WIRING GP-AUXILIARY - 162-4097

ITEM	NUMBER	QTY	DESCRIPTION
-	502795D1	--	WIRING GP-AUXILIARY (NOT SERVICED)
-	162-4097	--	WIRING GP-AUXILIARY [A] (REF ONLY) (NOT SERVICED)
1	502180D1	1	HARNESS ASM (AUXILIARY POWER)
2	CH136-5268	1	STRIP
3	169-8229	2	SWITCH-ROCKER (AUXILIARY POWER)
4	CH124-4653	2	CAP
5	400837X1	7	STRAP-CABLE
6	CH146-9439	1	RELAY(12V)(AUXILIARY POWER SWITCHES)
7	400006X1	6	BOLT-SOCKET HEAD (M3X0.5X12MM)
8	CH3C-6969	6	NUT (M3X0.5)
9	CH119-5026	2	SCREW-PAN HEAD (10-16X0.63 IN)

[A] PART OF 500843D1;500849D1 CAB AR;
502795D1 WIRING GP-CONSOLE

1624097F
PR: t05i29k58b0149

WIRING GP-CAB - 152-0420

1 OF 2
ROW & SPECIAL APPLICATIONS

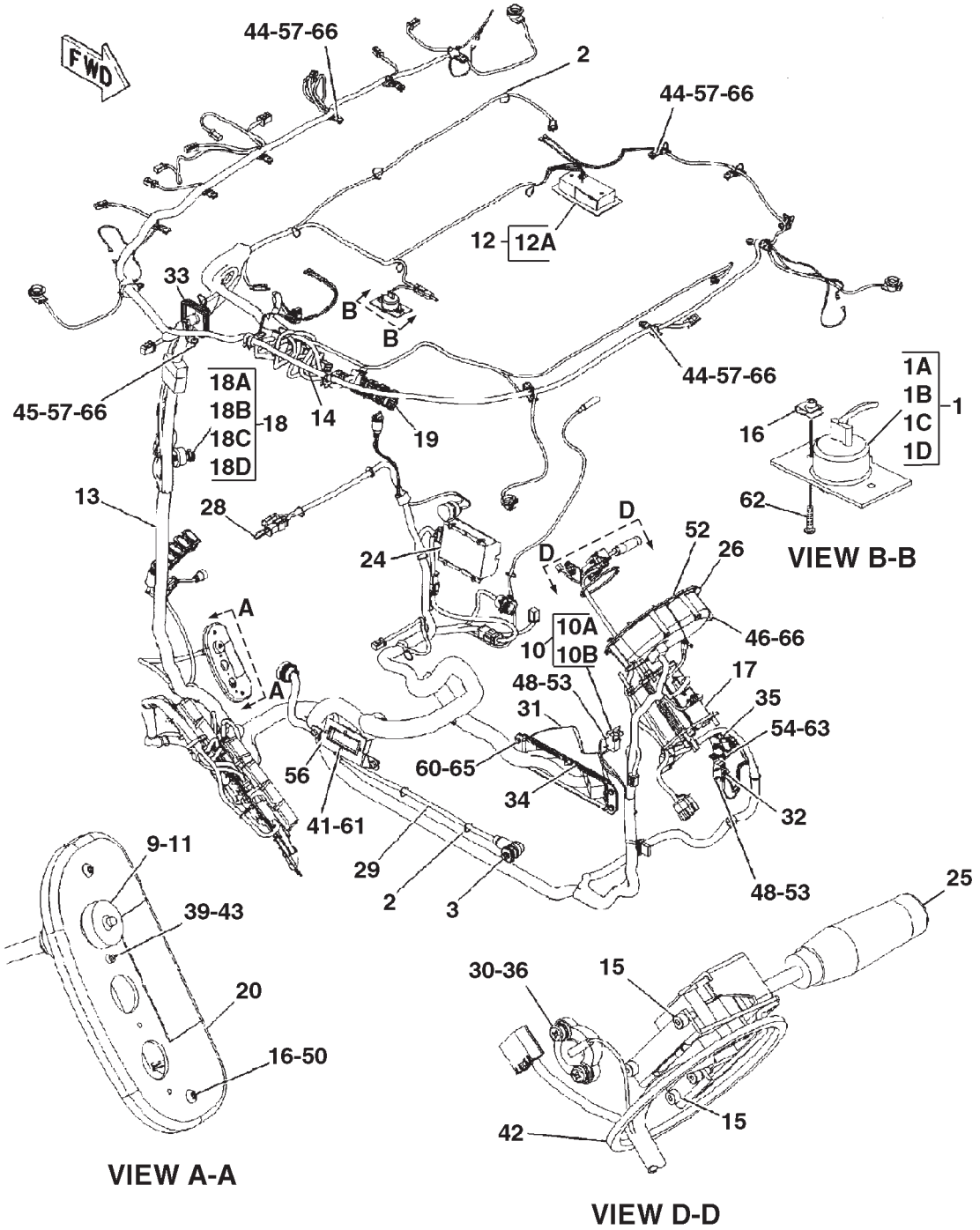

0898288A

WIRING GP-CAB - 152-0420

1 OF 2

ROW & SPECIAL APPLICATIONS

ITEM	NUMBER	QTY	DESCRIPTION
-	152-0420	--	WIRING GP-CAB [A] (NOT SERVICED)
1	3E-6284	1	LAMP ASM-IMPLEMENT CONTROL (12 VOLT)
			(SERVICE REPAIR ORDER 1A THRU 1D)
1A	CH102-8802	1	KIT-RECEPTACLE (2 PIN)
			(INCLUDES RECEPTACLE ASM AND WEDGE)
			(SERVICED AS COMPLETE KIT ONLY)
1B	6T-7298	1	LAMP (12 VOLT) (IMPLEMENT CONTROL)
1C	186-3735	2	PIN-CONNECTOR
1D	400511X1	1	WEDGE
2	400837X1	62	STRAP-CABLE
3	CH3T-8607	1	TERMINAL ASM
	6F-7044	2	NUT-FULL (1/2-20)
	9B-0453	2	LOCKWASHER
9	124-4653	1	CAP
10	129-6457	1	SWITCH ASM-LIMIT (BRAKE LIGHT)
			(FOR SERVICE REPAIR ORDER 10A & 10B)
10A	6V-8376	3	SCREW-MACHINE (8-32X0.25 IN)
10B	9B-7233	3	LOCKWASHER
11	135-4483	4	RETAINER
12	136-5511	1	LAMP ASM-DOME
			(FOR SERVICE REPAIR ORDER 12A)
12A	9W-3326	1	LAMP (12 VOLT) (DOME LIGHT)
13	136-5530	1	HARNESS ASM (CAB MAIN)
14	501949D1	1	HARNESS ASM (ROOF)
15	216-8277	4	BOLT-SOCKET HEAD
16	154-8079	4	NUT (U-TYPE RETAINER)
17	217-9779	1	CONTROL GP-STEERING
			(SEE BREAKDOWN FOR COMPONENTS)
18	CH163-2657	1	SWITCH GP-START [B]
			(FOR SERVICE REPAIR ORDER 18A
			THRU 18D)
18A	3E-3377	1	WEDGE-RECEPTACLE LOCK
18B	7T-6799	1	NUT-MOUNTING (1-32)
18C	186-3735	2	PIN-CONNECTOR
18D	102-8804	1	KIT-RECEPTACLE (4 PIN)
			(INCLUDES RECEPTACLE ASM AND WEDGE)
			(SERVICED AS COMPLETE KIT ONLY)
-	CH5P-8500	1	KEY IGNITION
19	CH165-5975	10	PLUG-PANEL
20	169-6367	1	PANEL ASM (SERVICE)
		1	DOOR (ORDER ITEM 20)
	169-6370	1	PANEL
		1	SPRING-TORSION (ORDER ITEM 20)
24	170-1198	1	MODULE-FLASHER
25	170-2204	1	SWITCH ASM (HIGH/LOW BEAM,ROADING,TURN)
26	212-6998	1	MODULE GP-DISPLAY (DASH)

CONTINUED

[A] PART OF 500843D1;500844D1;500849D1
CAB AR
[B] REQUIRES CH5P-8500 KEY

WIRING GP-CAB - 152-0420

1 OF 2
ROW & SPECIAL APPLICATIONS

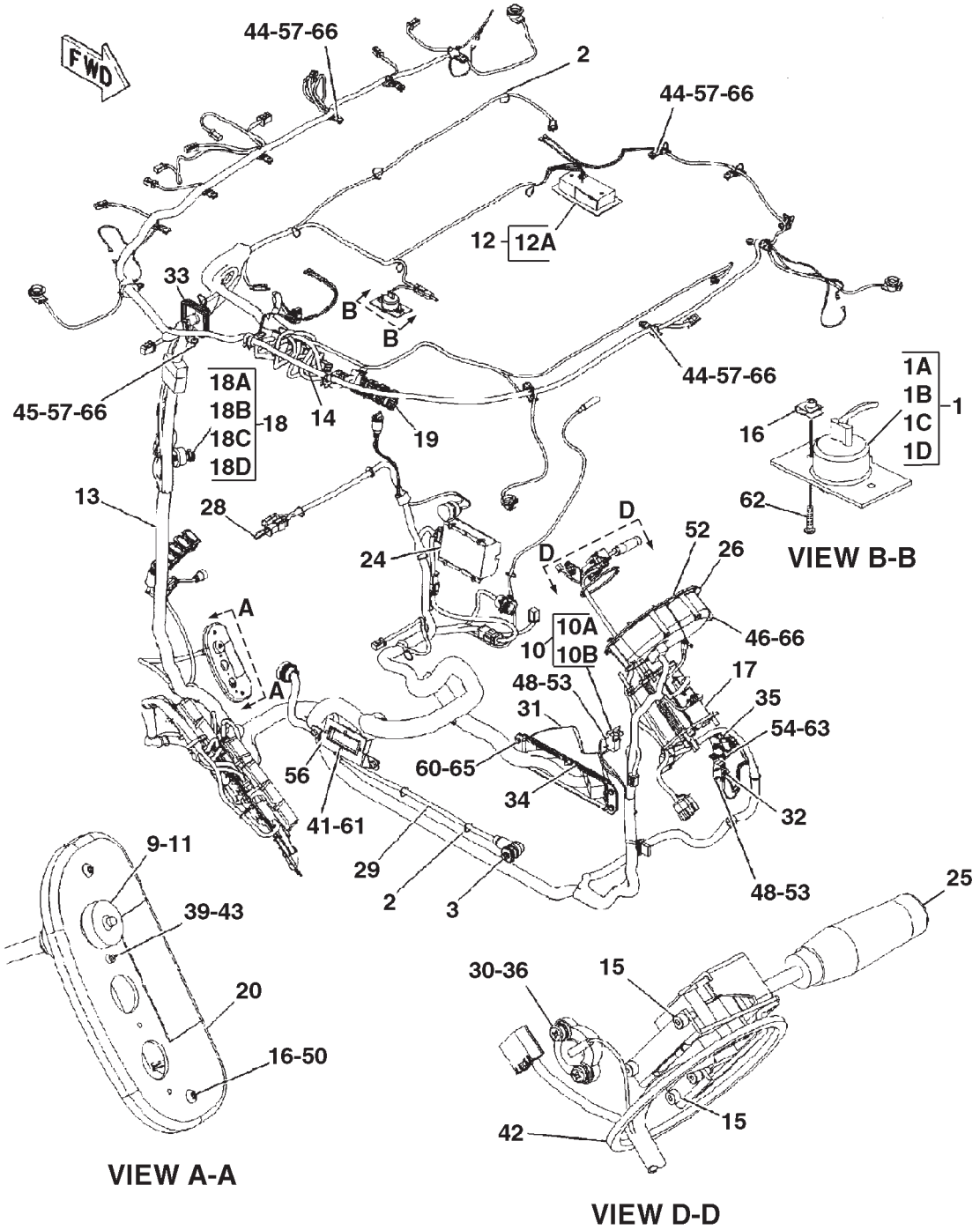

0898288A

WIRING GP-CAB - 152-0420

1 OF 2

ROW & SPECIAL APPLICATIONS

ITEM	NUMBER	QTY	DESCRIPTION
-	152-0420	--	WIRING GP-CAB [A] (NOT SERVICED)
28	501940D1	1	WIRING GP-TRAILER JUMPER (SEE BREAKDOWN)
29	502188D1	1	CABLE (CAB POWER)
30	8C-8514	2	SCREW-MACHINE (8-32X.375 IN)
31	177-0381	1	HOUSING
32	129-6457	1	SWITCH ASM-LIMIT (INCHING PEDAL) (FOR SERVICE REPAIR ORDER 32A & 32B)
32A	6V-8376	3	SCREW-MACHINE (8-32X0.25 IN)
32B	9B-7233	3	LOCKWASHER
33	178-7957	1	GROMMET
34	180-5244	1	SEAL-CONNECTOR
35	500317D1	1	SENSOR GP-POSITION (INCHING PEDAL)
36	096-6166	10	WASHER-HARD (4.5X9X1)
39	153-9300	1	BOLT-SOCKET HEAD (M3X0.5X12MM)
41	3B-4501	12	LOCKWASHER
42	CH7K-1181	1	STRAP-CABLE
43	3C-6969	5	NUT (M3X0.5)
44	4P-7581	15	CLIP
45	4P-8134	2	CLIP
46	CH5C-2874	4	NUT (M5X.8)
48	CH216-9085	4	SCREW-PAN HEAD
50	7Y-7256	2	SCREW-TRUSS HEAD (M4X0.7X35MM)
52	8T-0337	6	SCREW-MACHINE (M4X0.7X12MM)
53	CH8T-2658	4	LOCKNUT (M3X0.5)
54	8T-2659	2	LOCKNUT (M4X0.7)
56	177-0385	1	PLATE ASM
	CH8T-3612	2	NUT-WELD (M8X1.25)
57	110-2028	17	SCREW-PAN HEAD (10-14X.75 IN) (10-14X.75IN)
60	CH8T-4205	7	WASHER-HARD (7.2X14.5X2MM)
61	8T-9405	12	BOLT-SOCKET HEAD (M4X0.7X16MM)
62	123-0707	2	SCREW-HEX SOCKET (M4X0.7X20MM)
63	9X-1046	2	SCREW (M4X0.7X18MM)
65	9X-2044	7	SCREW-TRUSS HEAD (M6X1X16MM)
66	098-8968	25	WASHER (5X16X1.2)

[A] PART OF 500843D1;500844D1;500849D1
CAB AR
[B] REQUIRES CH5P-8500 KEY

0898288A
PR: t05i29k58b0150

WIRING GP-CAB - 152-0420
2 OF 2
ROW & SPECIAL APPLICATIONS

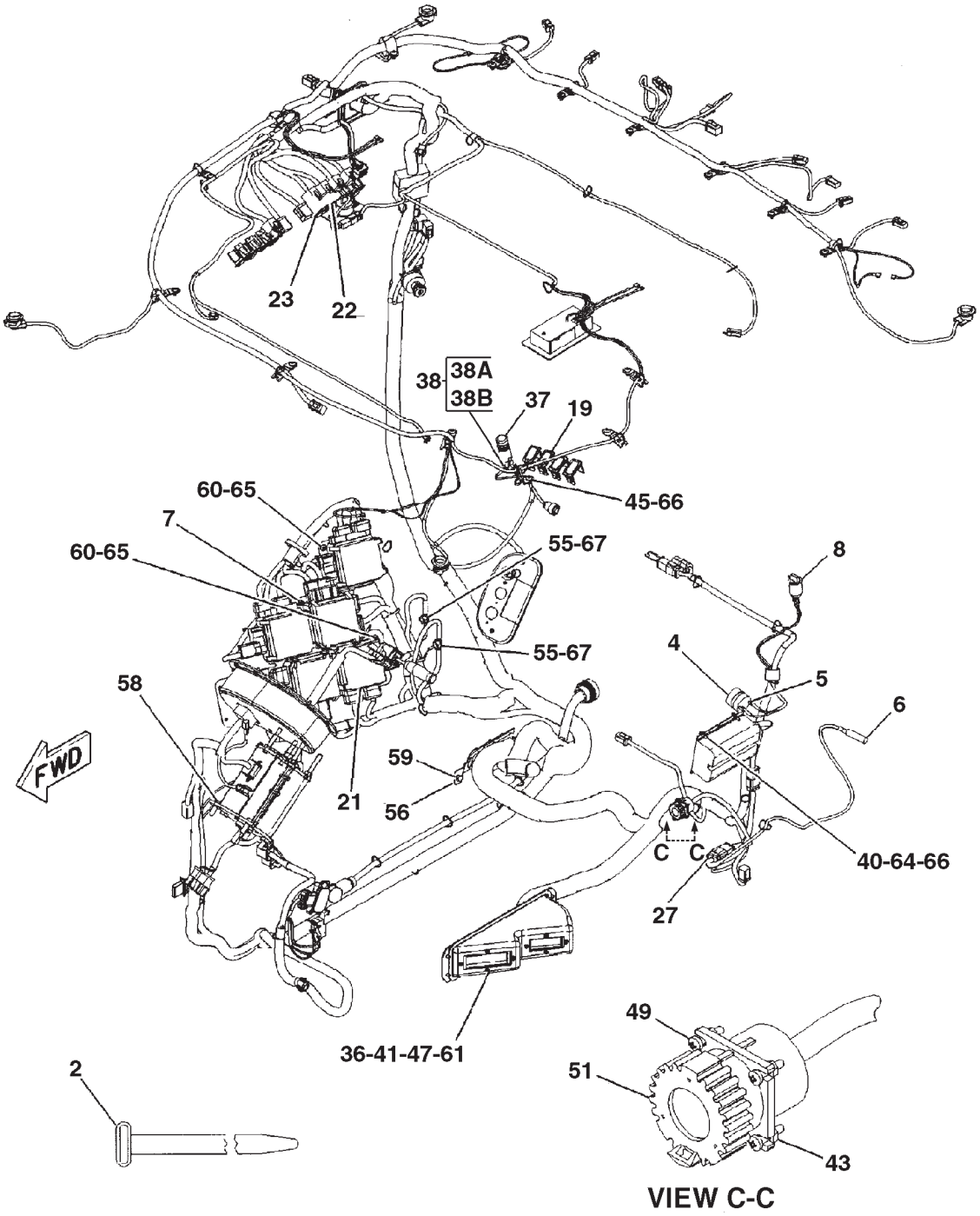

0898293A

WIRING GP-CAB - 152-0420

2 OF 2
ROW & SPECIAL APPLICATIONS

ITEM	NUMBER	QTY	DESCRIPTION
-	152-0420	--	WIRING GP-CAB [A] (NOT SERVICED)
2	3S-2093	62	STRAP-CABLE
4	4E-2229	1	DAMPER-ALARM (VOLUME CONTROL)
5	CH219-4673	1	HORN (OPERATOR AUDIBLE ALARM)
6	105-8034	1	SWITCH-LIMIT (CAB DOOR)
7	116-7471	1	PULLER-MINIFUSE
8	117-2311	1	RECEPTACLE-POWER (12 VOLT)
19	CH165-5975	10	PLUG
21	169-6380	1	PANEL GP-FUSE (NOT SERVICED)
			(SEE BREAKDOWN FOR COMPONENTS)
22	216-3028	1	SWITCH-ROCKER (HAZARD)
23	169-8231	1	SWITCH-ROCKER (FLOOD LIGHTS)
27	173-7707	1	HARNESS (FLASHER)
36	096-6166	10	WASHER-HARD (4.5X9X1)
37	145-0846	1	KNOB-LIGHTER
38	145-0847	1	HOUSING ASM (LIGHTER)
			(FOR SERVICE REPAIR ORDER 38A & 38B)
38A	6V-8376	1	SCREW-MACHINE (8-32X0.25 IN)
38B	9B-7233	1	LOCKWASHER
40	191-2276	4	SCREW-TRUSS HEAD (M5X0.8)
41	3B-4501	12	LOCKWASHER
43	3C-6969	5	NUT (M3X0.5)
45	4P-8134	2	CLIP
47	CH5C-8312	8	NUT (M4X0.7)
49	6V-9671	4	SCREW-MACHINE (M3X0.5X12MM)
51	8C-6354	1	CAP-RECEPTACLE
55	400287X1	2	WASHER-HARD (11X21X2.5)
56	177-0385	1	PLATE ASM
	CH8T-3612	2	NUT-WELD (M8X1.25)
58	400058X1	4	BOLT (M10X1.5X30MM)
59	400227X1	2	BOLT (M8X1.25X16MM)
60	CH8T-4205	7	WASHER-HARD (7.2X14.5X2MM)
61	8T-9405	12	BOLT-SOCKET HEAD (M4X0.7X16MM)
64	179-4324	4	LOCKNUT (M5X0.8)
65	9X-2044	7	SCREW-TRUSS HEAD (M6X1X16MM)
66	098-8968	25	WASHER (5X16X1.2)
67	400039X1	2	BOLT (M10X1.5X25MM)

[A] PART OF 500843D1;500844D1;500849D1
CAB AR

0898293A
PR: t05i29k58b0151

WIRING GP-CAB - 152-0005A

EAME ONLY

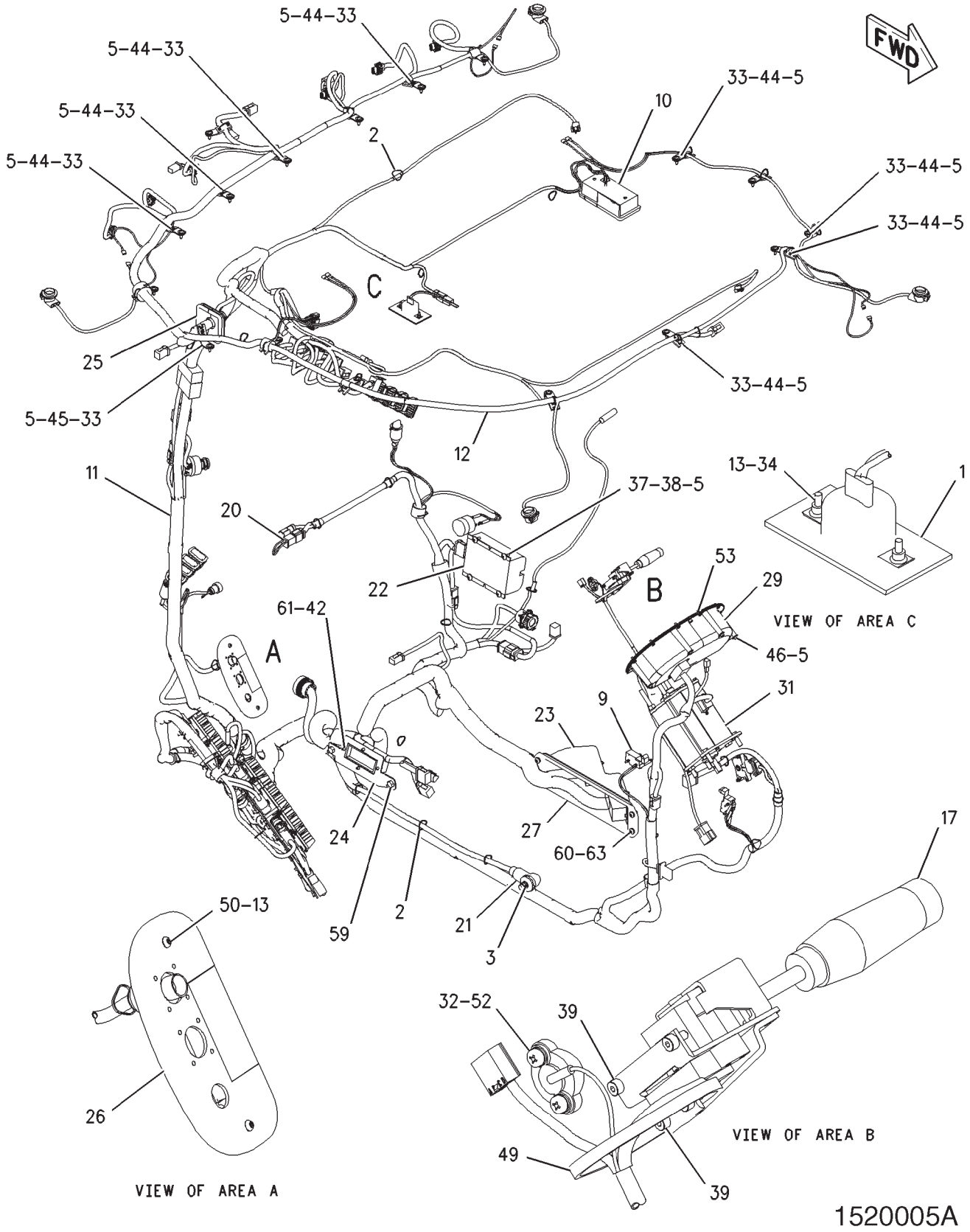

WIRING GP-CAB - 152-0005A
EAME ONLY

ITEM	NUMBER	QTY	DESCRIPTION
-	152-0005	--	WIRING GP-CAB [A] (NOT SERVICED)
1	501935D1	1	COURTESY LIGHT AS (12 VOLT)
			(SEE BREAKDOWN FOR COMPONENTS)
2	400837X1	63	STRAP-CABLE [B]
3	CH3T-8607	1	STUD ASY-POWER TERMINAL
	6F-7044	2	NUT-FULL (1/2-20)
	9B-0453	2	LOCKWASHER
5	400076X1	25	WASHER (5X16X1.2)
9	CH129-6457	1	SWITCH AS-LIMIT (BRAKE LIGHT)
	CH6V-8376	3	SCREW-MACHINE (8-32X0.25 IN)
	CH9B-7233	3	LOCKWASHER
10	CH136-5511	1	LAMP AS-DOME
	CH9W-3326	1	LAMP (12 VOLT)
11	500446D1	1	HARNESS AS (CAB MAIN)
12	501949D1	1	HARNESS AS (ROOF)
13	400084X1	4	NUT-RETAINER (M4X0.07X0.6-3.8PANEL)
17	170-2204	1	SWITCH AS (HIGH/LOW BEAM, ROADING, TURN)
20	173-7708	1	HARNESS AS (TRAILER CONNECTOR)
21	502188D1	1	CABLE AS (CAB POWER)
22	CH175-7057	1	MODULE-FLASHER
23	177-0381	1	HOUSING-CAB INTERFACE
24	177-0385	1	PLATE AS
25	178-7957	1	GROMMET-INNER ROOF
26	179-4204	1	PANEL AS (SERVICE)
27	180-5244	1	SEAL-CONNECTOR
29	CH212-6998	1	MODULE GP-DISPLAY
31	217-9780	1	CONTROL GP-STEERING
			(SEE BREAKDOWN FOR COMPONENTS)
32	CH096-6166	10	WASHER-HARD (4.5X9X1)
33	CH110-2028	17	SCREW-PAN HEAD (10-14X.75 IN)
34	CH123-0707	2	SCREW-HEX SOCKET (M4X0.7X20MM)
37	CH179-4324	4	LOCKNUT
38	505003D1	4	SCREW (M5X0.8X20MM)
39	400017X1	4	BOLT-SCKT HD (M4X0.7X8)
42	CH3B-4501	12	LOCKWASHER
44	CH4P-7581	15	CLIP
45	CH4P-8134	2	CLIP
46	CH5C-2874	4	NUT (M5X.8)
49	CH7K-1181	1	STRAP-CABLE
50	CH7Y-7256	2	SCREW-TRUSS HEAD (M4X0.7X35MM)
52	CH8C-8514	2	SCREW-MACHINE (8-32X.375 IN)
53	CH8T-0337	6	SCREW-MACHINE (M4X0.7X12MM)
59	400227X1	2	BOLT (M8X1.25X16MM)
60	CH8T-4205	7	WASHER-HARD (7.2X14.5X2)
61	400251X1	12	BOLT-SOCKET HEAD (M4X0.7X16MM)
63	CH9X-2044	7	SCREW-TRUSS HEAD (M6X1X16MM)

[A] PART OF 152-0008; 152-0009 CAB AR
[B] USE AS REQUIRED

1520005A
PR: t05i29k58b0152

WIRING GP-CAB - 152-0005B

EAME ONLY

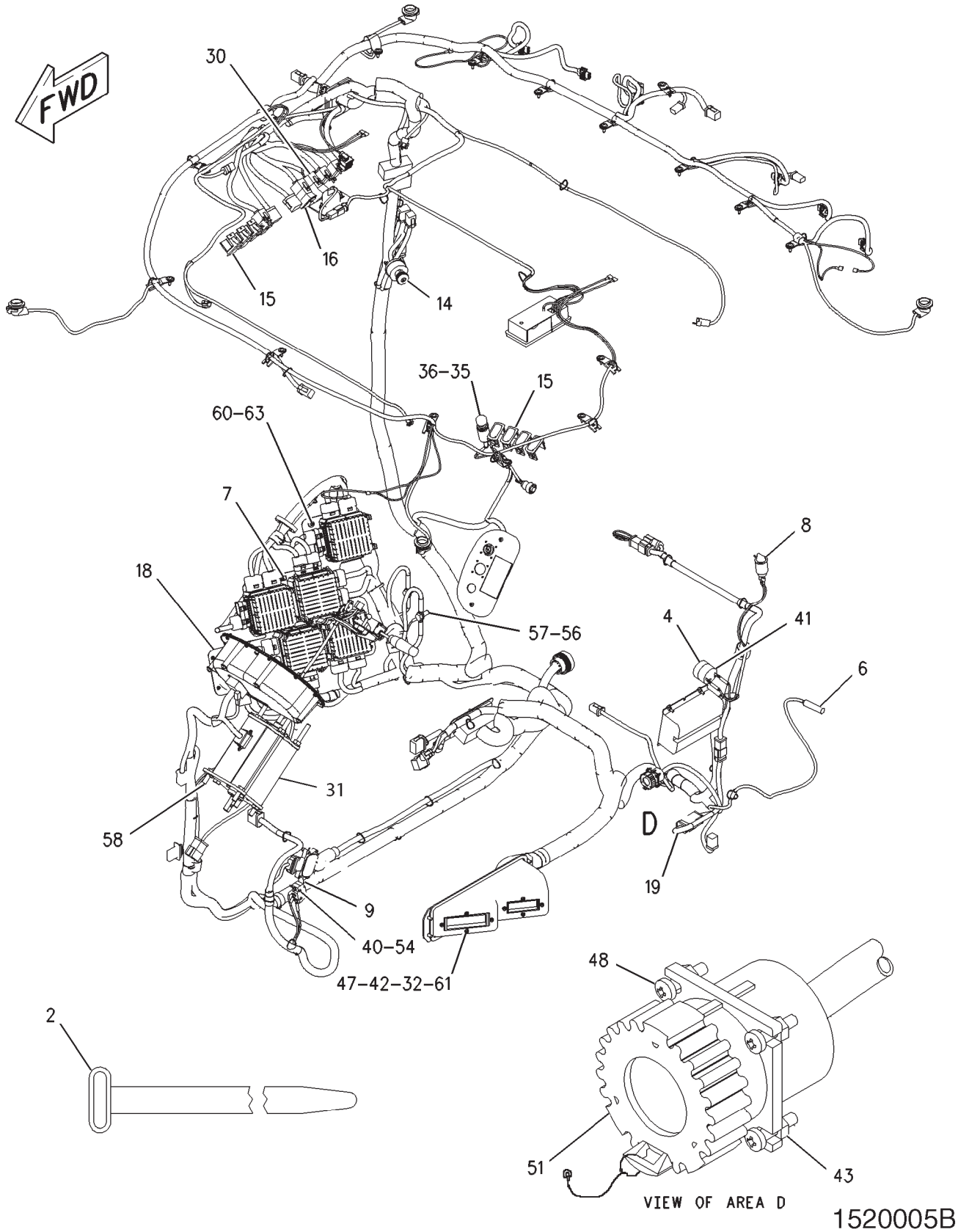

WIRING GP-CAB - 152-0005B
EAME ONLY

ITEM	NUMBER	QTY	DESCRIPTION
-	152-0005	--	WIRING GP-CAB [A] (NOT SERVICED)
2	400837X1	63	STRAP-CABLE [B]
4	CH4E-2229	1	DAMPER AS-ALARM
6	CH105-8034	1	SWITCH AS-LIMIT (CAB DOOR)
7	CH116-7471	1	PULLER-MINIFUSE
8	CH117-2311	2	RECEPTACLE AS-POWER (12 VOLT)
9	CH129-6457	1	SWITCH AS-LIMIT
	CH6V-8376	3	SCREW-MACHINE (8-32X0.25 IN)
	CH9B-7233	3	LOCKWASHER
14	CH163-2657	1	SWITCH GP-START
	400781X1	1	WEDGE-RECEPTACLE LOCK
	CH7T-6799	1	NUT-MOUNTING (1-32)
	400562X1	2	PIN-CONNECTOR
	400708X1	1	KIT-RECEPTACLE (4 PIN)
			(INCLUDES RECEPTACLE AS WEDGE)
	CH5P-8500	1	KEY-IGNITION
15	CH165-5975	8	PLUG
16	169-8231	1	SWITCH AS-ROCKER (FLOOD)
18	172-6841	1	PANEL GP-FUSE (CLAAS)
			(SEE BREAKDOWN FOR COMPONENTS)
19	502173D1	1	HARNESS AS (FLASHER)
30	216-3028	1	SWITCH AS-ROCKER (HAZARD)
31	217-9780	1	CONTROL GP-STEERING
			(SEE BREAKDOWN FOR COMPONENTS)
32	CH096-6166	10	WASHER-HARD (4.5X9X1)
35	CH145-0846	1	KNOB AS-LIGHTER
36	CH145-0847	1	HOUSING AS-LIGHTER
	CH6V-8376	1	SCREW-MACHINE (8-32X0.25 IN)
	CH9B-7233	1	LOCKWASHER
40	CH216-9085	4	SCREW-PAN HEAD
41	CH219-4673	1	HORN (12 VOLT)
42	CH3B-4501	12	LOCKWASHER
43	CH3C-6969	4	NUT (M3X0.5)
47	CH5C-8312	8	NUT (M4X0.7)
48	CH6V-9671	4	SCREW-MACHINE (M3X0.5X12MM)
51	501941D1	1	CAP AS-W/LANYARD
	CH8C-6354	1	CAP-RECEPTACLE
	400408X1	1	LANYARD
54	CH8T-2658	4	LOCKNUT (M3X0.5)
56	400287X1	2	WASHER-HARD (11X21X2.5)
57	400039X1	2	BOLT (M10X1.5X25MM)
58	400058X1	4	BOLT (M10X1.5X30MM)
60	CH8T-4205	7	WASHER-HARD (7.2X14.5X2)
61	400251X1	12	BOLT-SOCKET HEAD (M4X0.7X16MM)
63	CH9X-2044	7	SCREW-TRUSS HEAD (M6X1X16MM)

[A] PART OF 152-0008; 152-0009 CAB AR
[B] USE AS REQUIRED

1520005B
PR: t05i29k58b0153

WIRING GP-TRAILER JUMPER - 501940D1

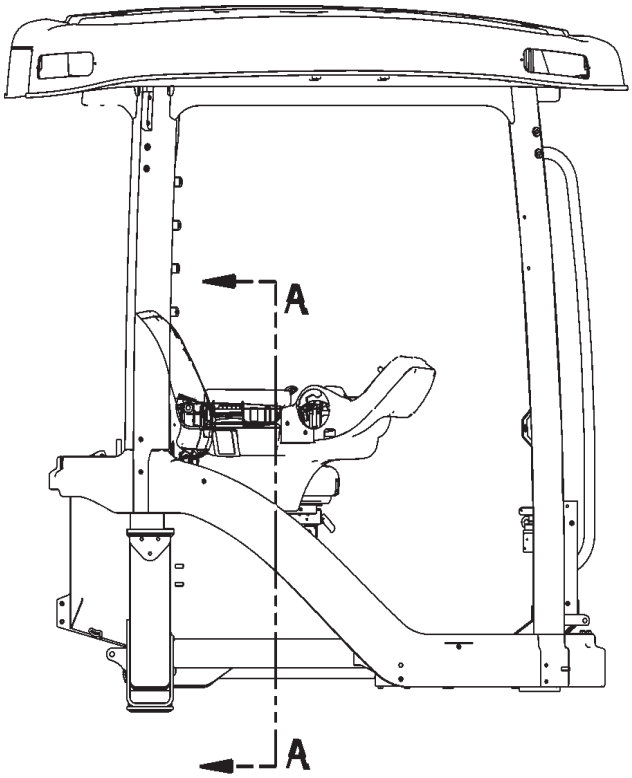

RIGHT SIDE VIEW OF CAB

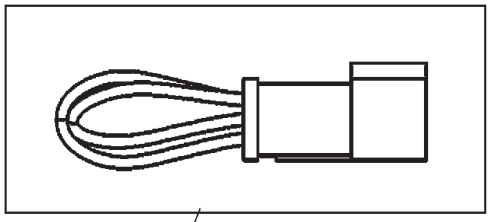

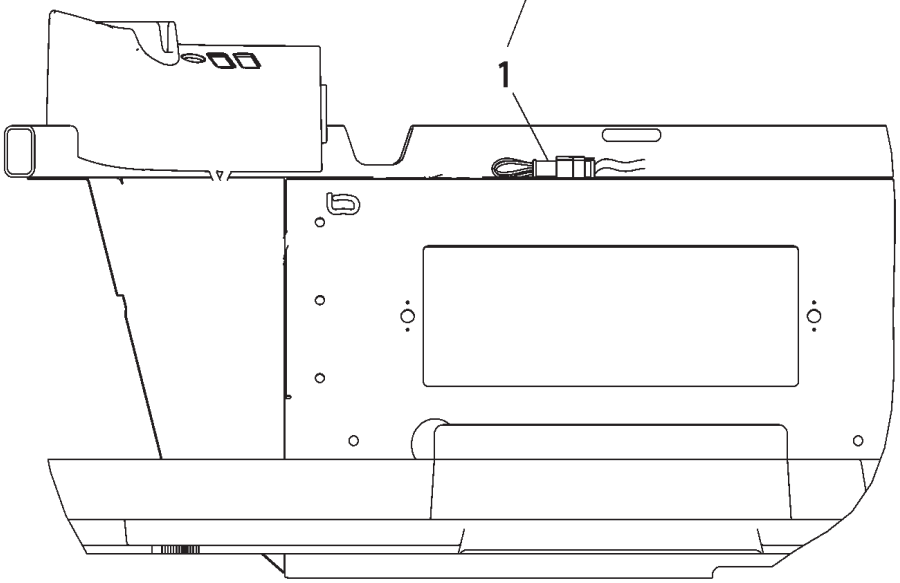

SECTION A-A
(SEAT AND REAR WRAP REMOVED)

501940DC

WIRING GP-TRAILER JUMPER - 501940D1

ITEM	NUMBER	QTY	DESCRIPTION
-	501940D1	--	WIRING GP-TRAILER JUMPER
1	173-7708	1	HARNESS AS-TRAILER

501940DC
PR: t05i29k58b0154

WIRING GP-COMPACT DISC CHANGER
195-9532

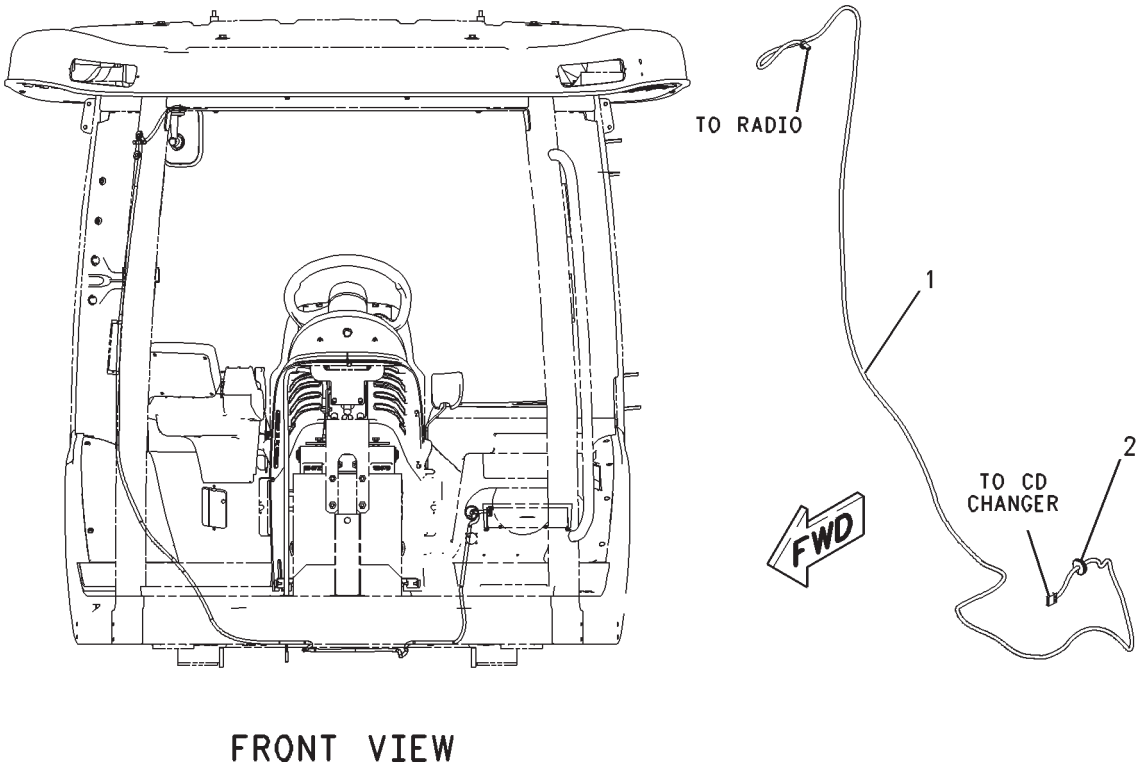

00825421

WIRING GP-COMPACT DISC CHANGER
195-9532

ITEM	NUMBER	QTY	DESCRIPTION
-	195-9532	--	WIRING GP-COMPACT DISC CHANGER (NOT SERVICED)
1	170-7252	1	HARNESS (COMPACT DISC CHANGER)
2	CH212-4443	1	GROMMET

00825421
PR: t05i29k58b0155

WIRING GP-CONSOLE - 166-1211
ARMREST W/PTO

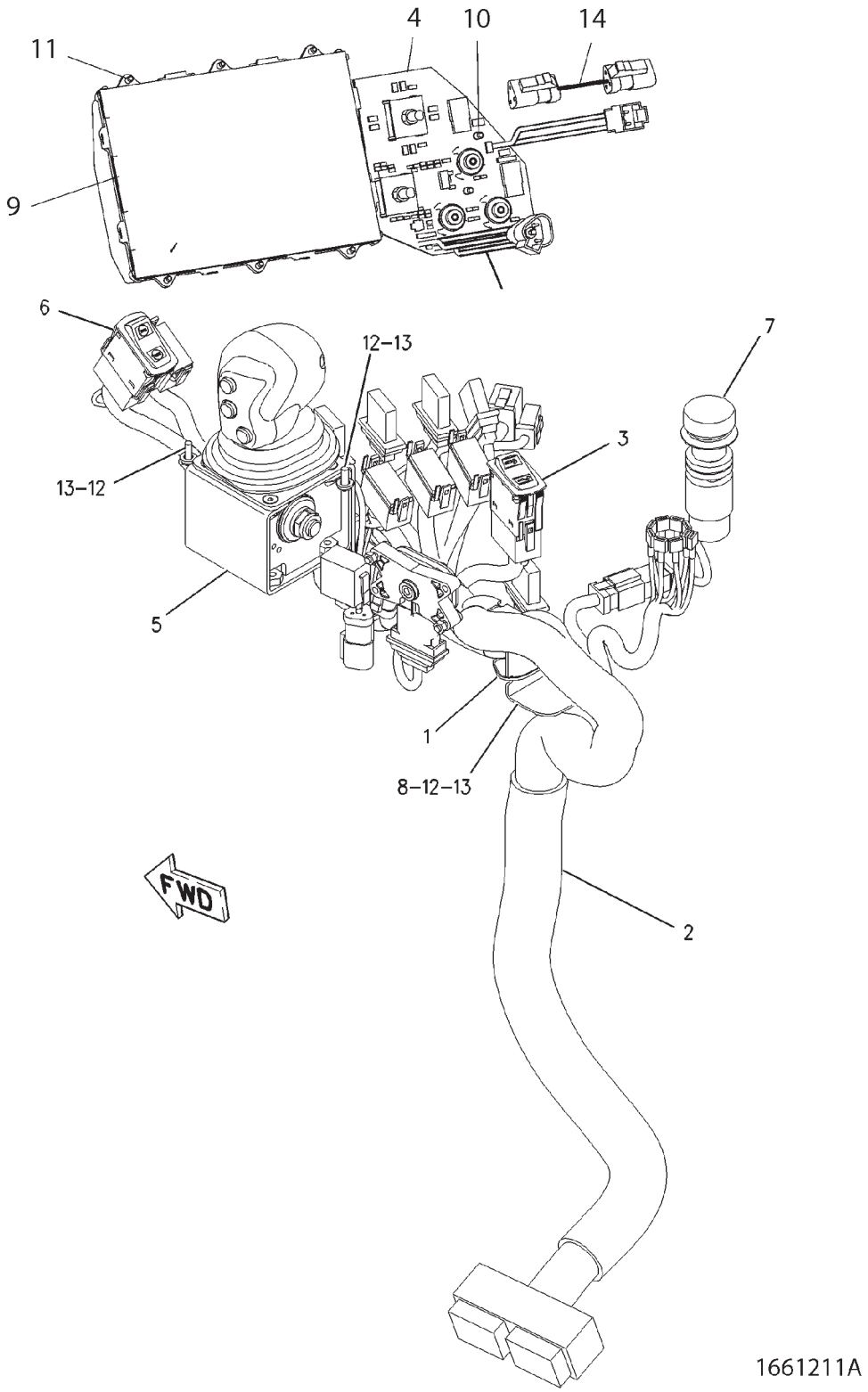

WIRING GP-CONSOLE - 166-1211
ARMREST W/PTO

ITEM	NUMBER	QTY	DESCRIPTION
-	166-1211	--	WIRING GP-CONSOLE [A] (NOT SERVICED)
1	400837X1	4	STRAP-CABLE
2	502035D1	1	HARNESS AS. (ARMREST)
3	222-2457	1	SWITCH-ROCKER (ROADING LOCKOUT)
4	501033D1	1	MODULE GP-MONITOR KEYPAD (TR MGMT CNTR) (SEE BREAKDOWN FOR COMPONENTS)
5	169-6346	1	CONTROL GP-TRANSMISSION (NOT SERVICED) (SEE BREAKDOWN FOR COMPONENTS)
6	169-8228	1	SWITCH-ROCKER (ONE TOUCH MULTI-FUNCTION)
7	502009D1	1	SWITCH AS. (POWER TAKE-OFF)
	400782X1	1	CONNECTOR-RECP.
	400562X1	4	PIN-CONNECTOR
8	202-0844	1	BRACKET
9	502006D1	1	DISPLAY (TRACTOR MGMT CENTER)
10	400834X1	4	SCREW-TRUSS HD (8-16X0.5IN)
11	400835X1	6	SCREW-PAN HEAD (6-19X0.5IN)
12	400836X1	3	SCREW-MACHINE (M5X0.8 THD)
13	400310X1	3	WASHER (6.6X12X2MM THK)
14	502005D1	1	JUMPER HARNESS-SWITCH MODULE

[A] PART OF 500484D2; 500485D2; 500488D2; 500489D2; 500791D2; 500792D2 ARMREST GP

1661211A
PR: t05i29k58b0156

WIRING GP-CONSOLE - 136-5477
WITHOUT PTO

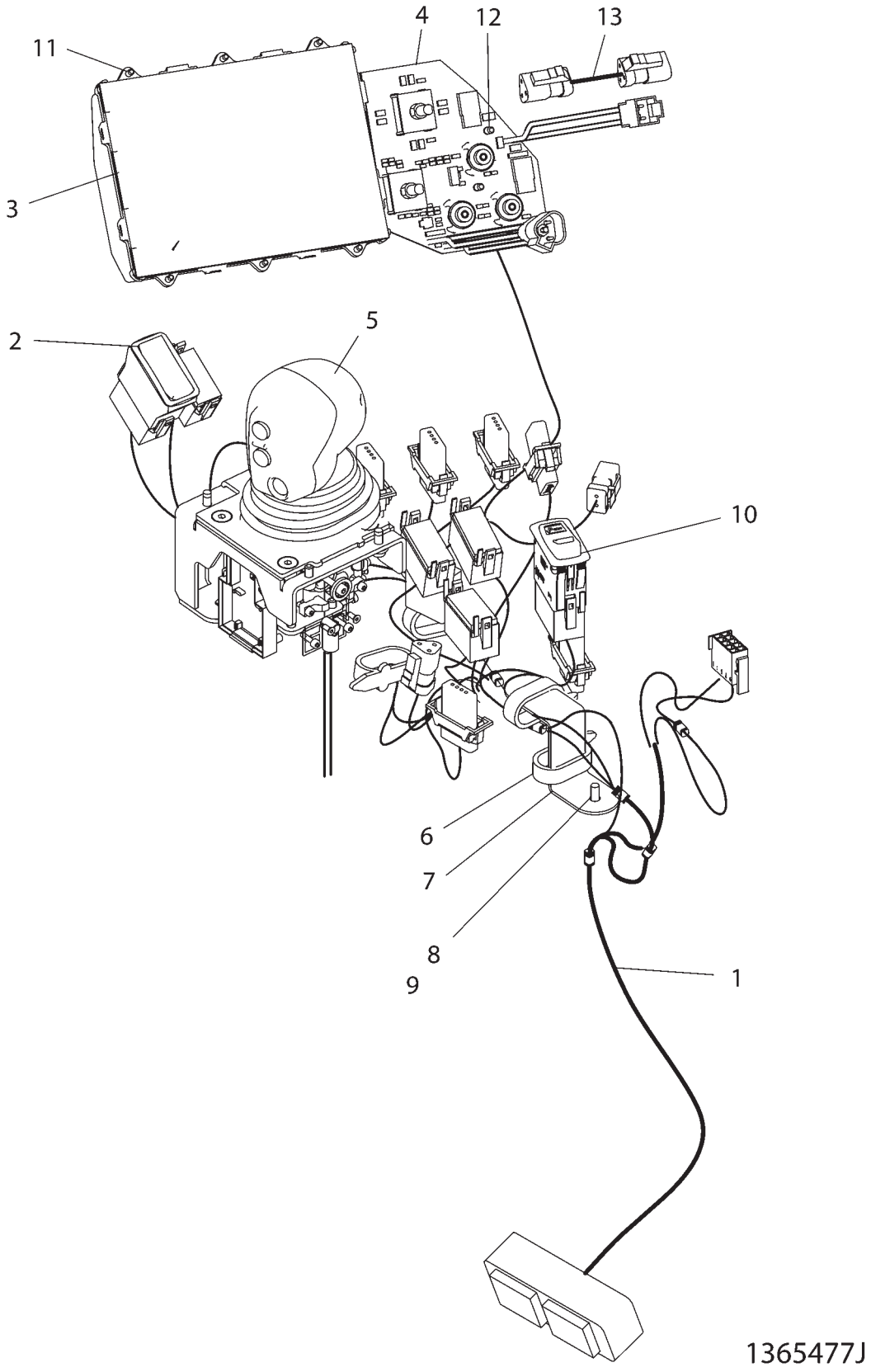

WIRING GP-CONSOLE - 136-5477
WITHOUT PTO

ITEM	NUMBER	QTY	DESCRIPTION
-	136-5477	--	WIRING GP-CONSOLE [A] (NOT SERVICED)
1	502035D1	1	HARNESS ASM (ARMREST)
2	169-8228	1	SWITCH ASM-ROCKER (ONE TOUCH MULTI-FUNCTION)
3	502006D1	1	DISPLAY
4	501033D1	1	CONTROL GP-ELECTRONIC (SEE BREAKDOWN FOR COMPONENTS)
5	169-6346	1	CONTROL GP-TRANSMISSION (NOT SERVICED) (SEE BREAKDOWN FOR COMPONENTS)
6	400837X1	4	STRAP-CABLE
7	202-0844	1	BRACKET
8	400310X1	3	WASHER (6.6X12X2)
9	400836X1	3	SCREW-PAN HD (M5X0.8X14)
10	222-2457	1	SWITCH-ROCKER (IMPLEMENT LOCKOUT)
11	400835X1	6	SCREW-PAN HD (6-19X12.7)
12	400834X1	4	SCREW-TRUSS HD (8-16X12.7MM)
13	502005D1	1	JUMPER HARNESS-SWITCH MODULE

[A] PART OF:
500486D2; 500487D2; 500490D2;
500491D2; 500793D2;
500794D2 ARMREST GP
500841D1; 500842D1; 500843D1;
500844D1; 500849D1 CAB AR

1365477J
PR: t05i29k58b0157

WIRING GP-CONSOLE - 168-1946
(AUX POWER CLAAS)
EAME ONLY

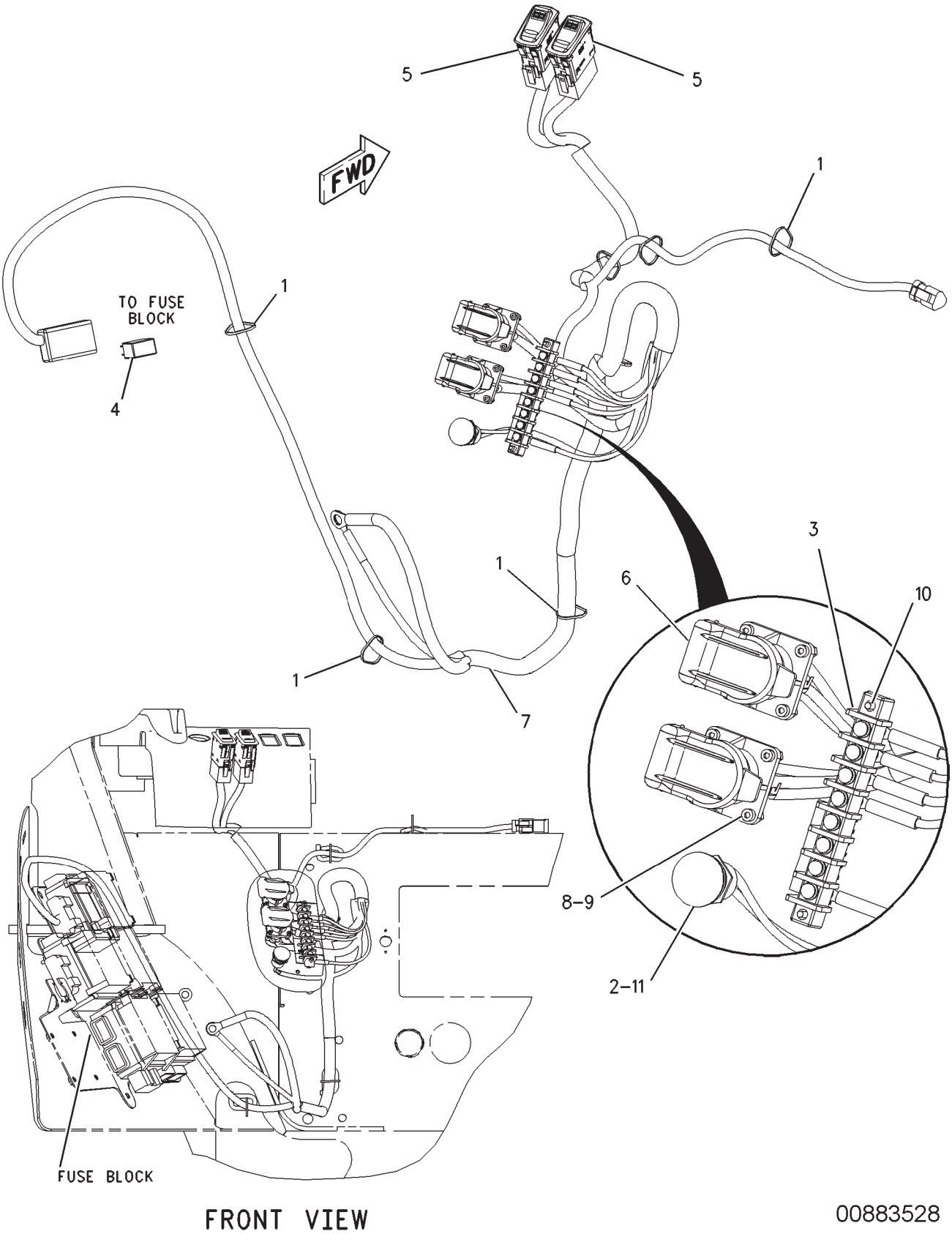

WIRING GP-CONSOLE - 168-1946

(AUX POWER CLAAS)
EAME ONLY

ITEM	NUMBER	QTY	DESCRIPTION
-	168-1946	--	WIRING GP-CONSOLE [A]
1	400837X1	7	STRAP-CABLE
2	CH9R-7941	1	RECEPTACLE AS-POWER (24 VOLTS)
	CH9R-7980	1	COVER
3	CH136-5268	1	STRIP AS
4	CH146-9439	1	RELAY AS (12 VOLT) (AUXILIARY POWER SWITCHES)
5	169-8229	2	SWITCH AS-ROCKER (AUXILIARY POWER)
6	CH174-9061	2	CONNECTOR
7	502175D1	1	HARNESS AS (AUXILIARY POWER)
8	400006X1	8	BOLT-SOCKET HEAD (M3X0.5X12MM)
9	CH3C-6969	8	NUT (M3X0.5 THD)
10	CH119-5026	2	SCREW-PAN HEAD (10-16X0.63 IN)
11	400322X1	1	SEAL-O-RING (19.28ODX1.78DIA)

[A] PART OF 500841D1; 500842D1
CAB AR

00883528
PR: t05i29k58b0158

WIRING GP-VEHICLE - 136-5668

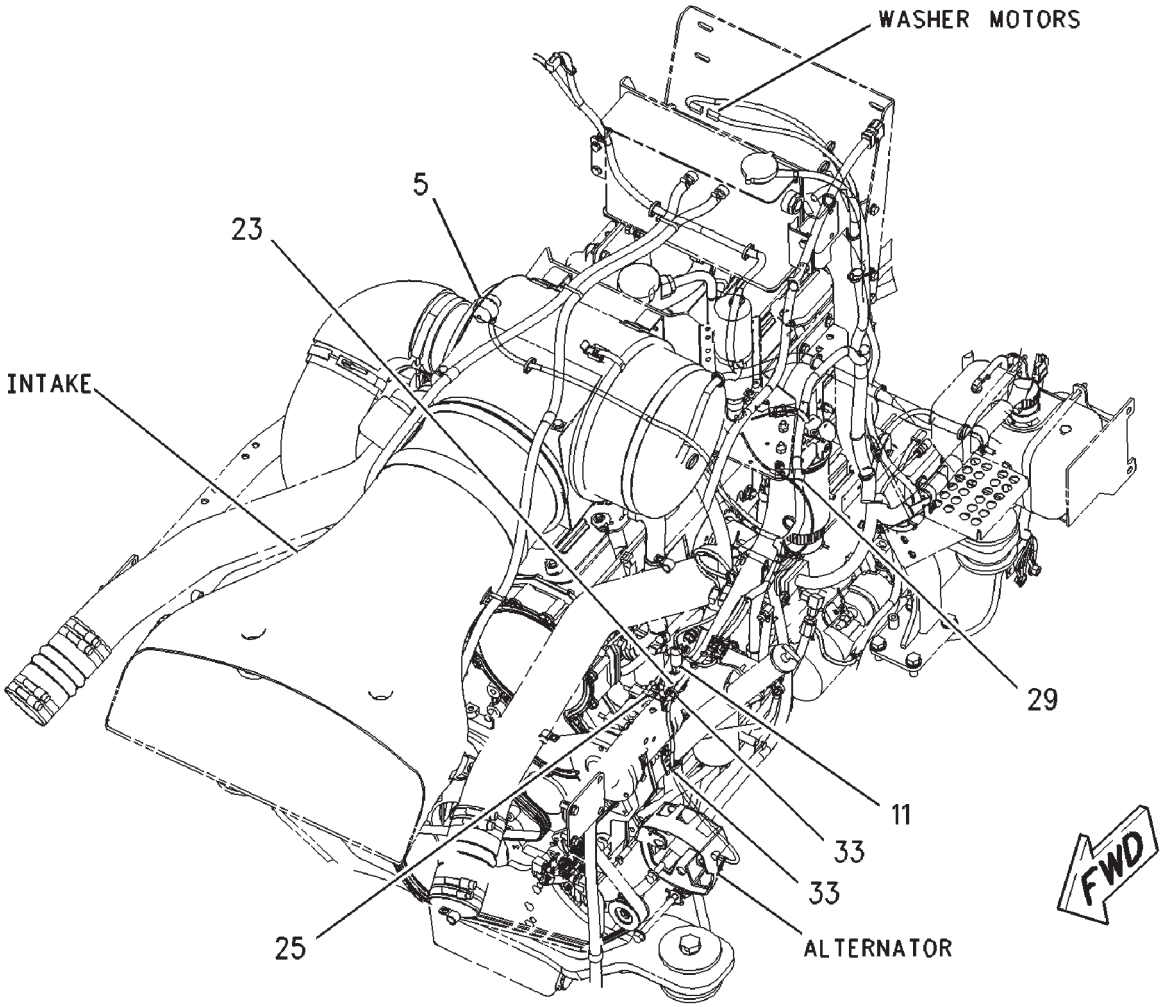

VIEW OF HARNESS
AROUND ENGINE

WIRING GP-VEHICLE - 136-5668

ITEM	NUMBER	QTY	DESCRIPTION
-	136-5668	--	WIRING GP-MACHINE [A] (NOT SERVICED)
5	226-4754	1	SWITCH ASM
11	CH149-6371	1	SWITCH ASM-PRESSURE
	CH102-8802	1	KIT-RECEPTACLE (2 PIN)
			(INCLUDES WEDGE AND RECEPTACLE ASM)
			(SERVICED AS COMPLETE KIT ONLY)
	400562X1	2	PIN-CONNECTOR
23	CH114-5333	1	SWITCH ASM-PRESSURE (HI-LOW)
	CH102-8802	1	KIT-RECEPTACLE (2 PIN)
			(INCLUDES WEDGE AND RECEPTACLE ASM)
			(SERVICED AS COMPLETE KIT ONLY)
	186-3735	2	PIN-CONNECTOR
25	CH132-5789	2	CLIP-LADDER (90DEGX47.5MM)
29	CH4D-9517	1	CLIP-LOOP (12.7ID)
33	CH4P-7581	11	CLIP-LADDER (15DEGX12.5MM)

[A] PART OF:
179-1952; 501810D1 BASE COMMON AR

00897024
PR: t05i29k58b0159

WIRING GP-MACHINE - 136-5668

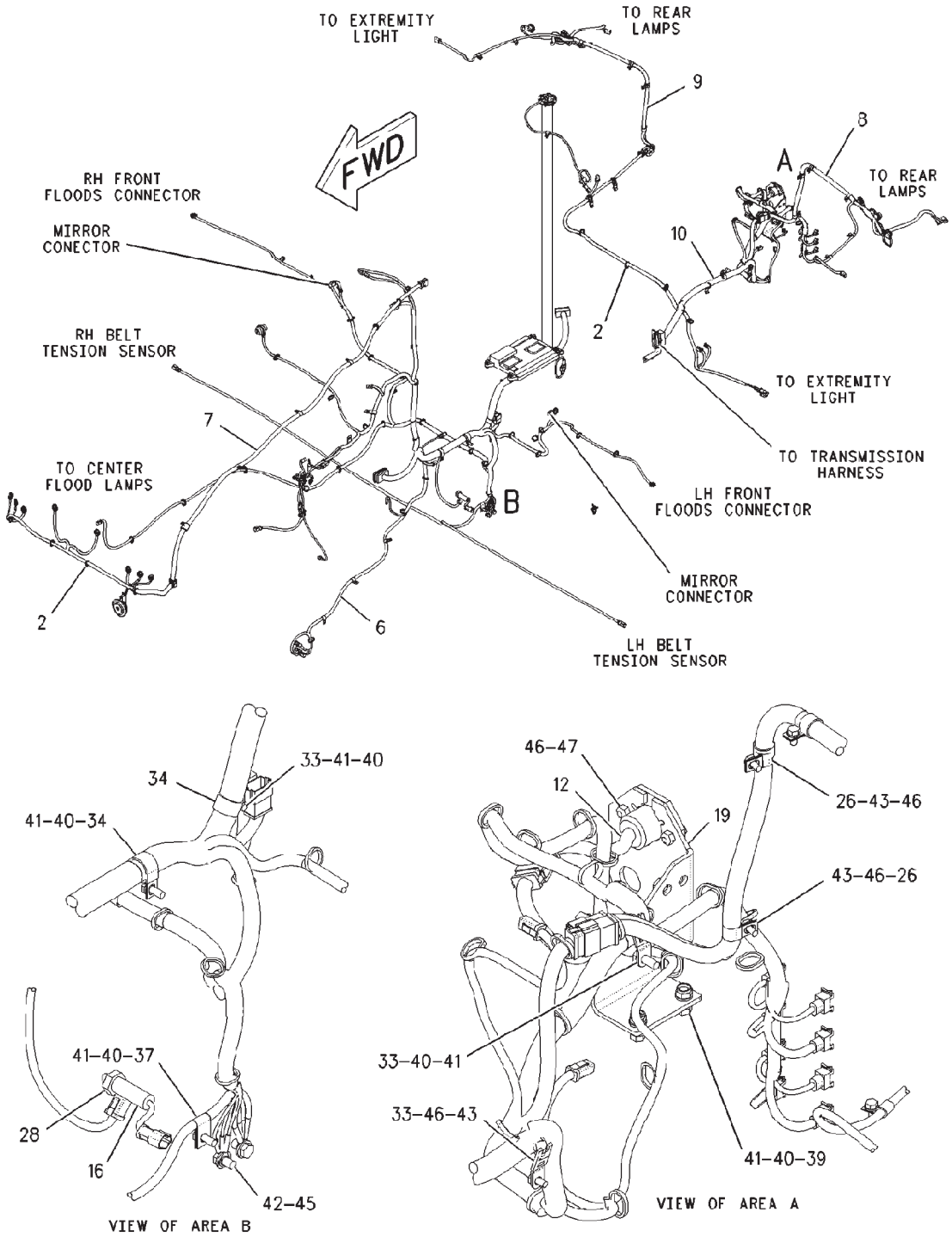

WIRING GP-MACHINE - 136-5668

ITEM	NUMBER	QTY	DESCRIPTION
-	136-5668	--	WIRING GP-MACHINE [A] (NOT SERVICED)
2	CH7K-1181	87	STRAP-CABLE
6	136-5380	1	HARNESS ASM-CHASSIS
7	136-5381	1	HARNESS ASM (HOOD)
8	226-4324	1	HARNESS ASM (LH)
9	226-4325	1	HARNESS ASM (RH)
10	501952D1	1	HARNESS ASM (REAR)
12	502197D1	1	HARNESS ASM-TRAILER
16	CH175-3244	1	SWITCH ASM-PRESSURE
	CH102-8803	1	KIT-RECEPTACLE (3 PIN)
			(INCLUDES WEDGE AND RECEPTACLE ASM)
			(SERVICED AS COMPLETE KIT ONLY)
	400562X1	1	PIN-CONNECTOR
19	500510D1	1	BRACKET ASM (INCLUDES BRACKET & NUT)
26	CH134-3988	11	CLIP-LOOP (15.88ID)
28	400318X1	2	SEAL-O-RING (11.89ID X 1.98 DIA)
33	CH4P-7581	11	CLIP-LADDER (15DEGX12.5MM)
34	400597X1	3	CLIP (31.75ID 3/8)
37	CH6S-5993	1	CLIP-LOOP (11.9ID)
39	CH8T-0389	2	LOCKNUT (M10X1.5)
40	400287X1	6	WASHER-HARD (11X21X2.5)
41	400039X1	6	BOLT (M10X1.5X25MM)
42	400047X1	2	BOLT (M12X1.75X20MM)
43	400227X1	18	BOLT (M8X1.25X16MM)
45	400357X1	2	WASHER-HARD (M12X25.5X3)
46	400339X1	23	WASHER-HARD (8.8X16X2)
47	400341X1	3	BOLT (M8X1.25X25MM)

[A] PART OF:
179-1952; 501810D1 BASE COMMON AR

00896821
PR: t05i29k58b0160

WIRING GP-MACHINE - 136-5668

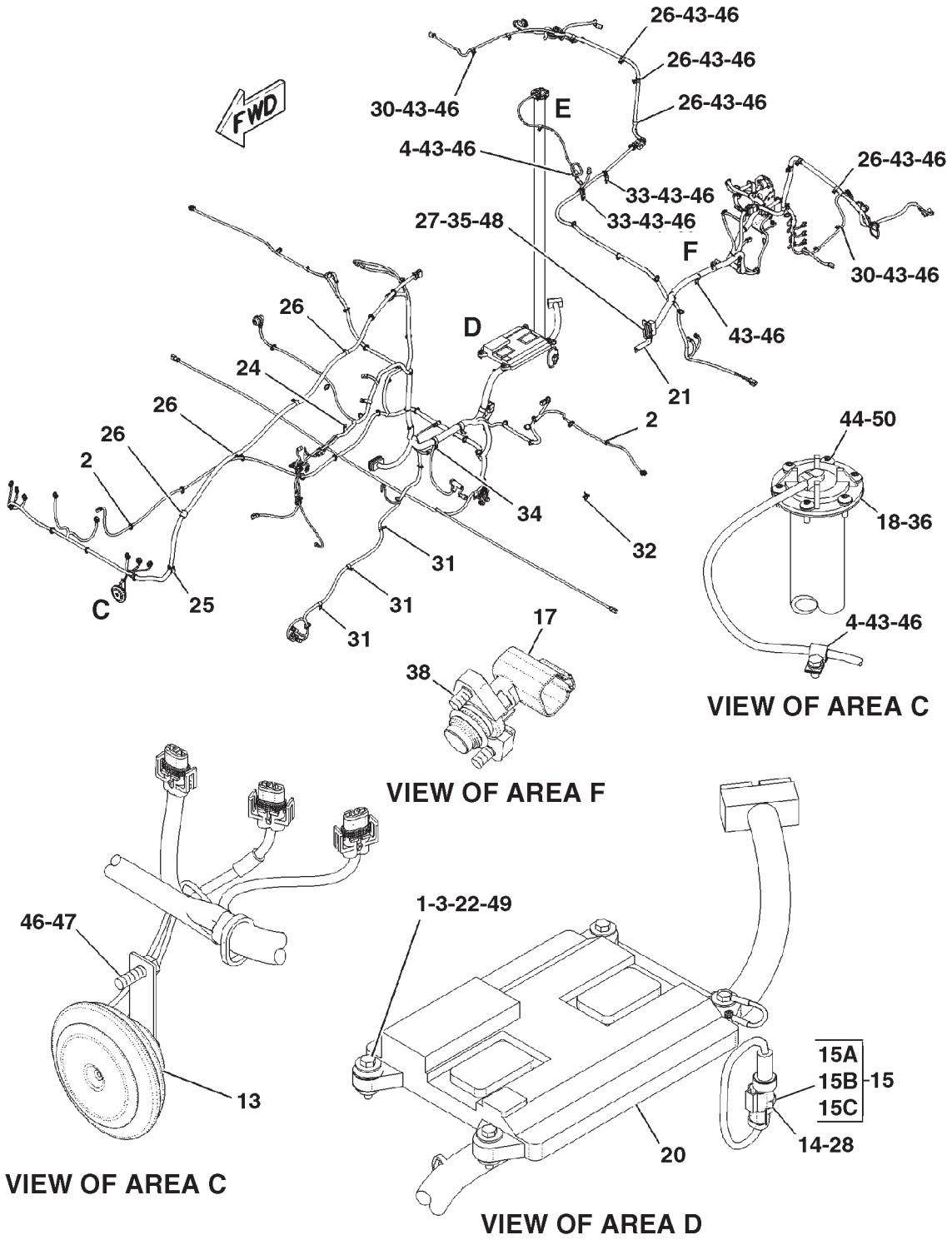

0896824A

WIRING GP-MACHINE - 136-5668

ITEM	NUMBER	QTY	DESCRIPTION
-	136-5668	--	WIRING GP-MACHINE [A] (NOT SERVICED)
1	CH6I-1418	4	SPACER (8.2X12.7X28.7)
2	CH7K-1181	87	STRAP-CABLE
3	CH8T-9655	8	MOUNT (ISOLATION)
4	CH134-3987	2	CLIP
13	501998D1	1	HORN (12 VOLT)
14	CH161-9932	1	SENSOR GP-PRESSURE
			(SEE BREAKDOWN FOR COMPONENTS)
15	CH173-7223	1	ADAPTER AS (INCLS 15A-15C)
15A	-----	1	ADAPTER (ORDER ITEM 15)
15B	400361X1	1	SEAL-O-RING (8.92ID X 1.83DIA)
15C	400318X1	1	SEAL-O-RING (11.89IDX1.98DIA)
17	CH183-4584	1	SENSOR GP-SPEED
	CH6J-2245		SEAL-O-RING (17.12IDX2.62DIA)
18	CH194-7620	1	SENDER AS-FUEL LEVEL
	CH204-7458	1	SENSOR KIT
20	209-0893	1	ELECTRONICS GP-MACHINE
			(TRANSMISSION/MACHINE)(NOT SERVICED)
	256-0176	1	SOFTWARE GP-POWER TRAIN
			(TRANSMISSION/MACHINE)
			(SOFTWARE ONLY)
			(LOCATED ON "ONEAGCO" OR CALL
			507-847-7222)
	178-9090	1	CONTROL GP-UNPROGRAMMED
		1	CONTROL ASM
	7X-6315	1	STRAP ASM-GROUND
	134-4126	1	WASHER (4.52X8.28X.76)
	184-2472	1	SCREW-PAN HEAD (LUBRICATED)
21	211-1171	1	BRACKET ASM
22	400001X1	4	BOLT (M8X1.25X40MM)
24	124-1479	1	CLIP
25	132-5789	2	CLIP
26	134-3988	12	CLIP
27	CH3B-4501	4	LOCKWASHER
28	400318X1	2	SEAL-O-RING (11.89IDX1.98DIA)
30	CH4D-7794	4	CLIP
31	CH4K-8864	3	CLIP
32	CH4P-7428	1	CLIP
33	CH4P-7581	11	CLIP
34	400597X1	3	CLIP
35	CH5C-8312	4	NUT (M4X0.7)
36	500014D1	1	GASKET
38	400209X1	2	BOLT-SOCKET HEAD (M6X1X12MM)
43	400227X1	18	BOLT (M8X1.25X16MM)
44	CH8T-4205	6	WASHER-HARD (7.2X14.5X2MM)
46	400339X1	23	WASHER-HARD (8.8X16X2)
47	400341X1	5	BOLT (M8X1.25X25MM)
48	400251X1	4	BOLT-SOCKET HEAD (M4X0.7X16MM)
49	CH9N-0869	4	WASHER-HARD (8.8X25.5X2)
50	CH9X-2045	6	SCREW-TRUSS HEAD (M6X1X20MM)

[A] PART OF:
179-1952; 501810D1 BASE COMMON AR

0896824A
PR: t05i29k58b0161

WIRING GP-VEHICLE - 136-5669

1 OF 3
EAME ONLY

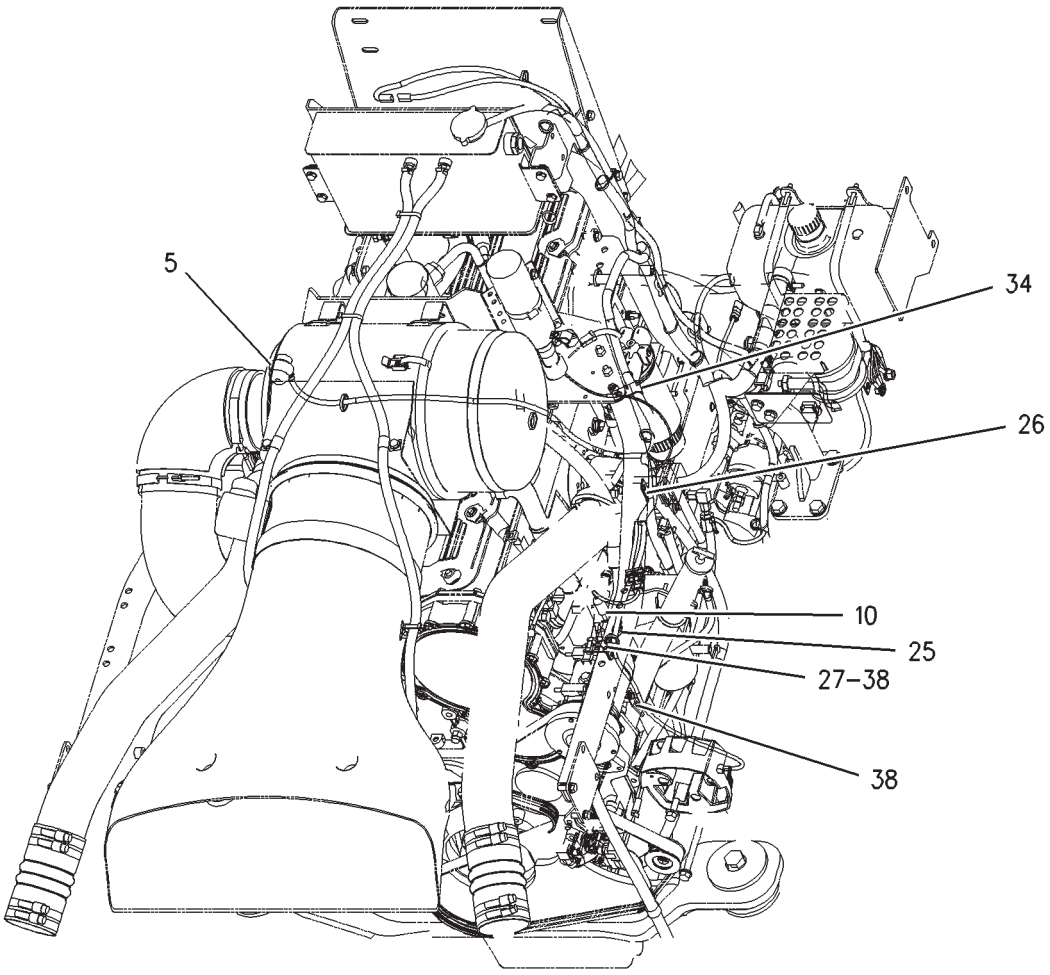

VIEW OF ENGINE

WIRING GP-VEHICLE - 136-5669

1 OF 3
EAME ONLY

ITEM	NUMBER	QTY	DESCRIPTION
-	136-5669	--	WIRING GP-VEHICLE [A] (NOT SERVICED)
5	226-4754	1	SWITCH AS
10	CH149-6371	1	SWITCH AS-PRESSURE (AIR CONDITIONER LOW)
	CH102-8802	1	KIT-RECEPTACLE (2 PIN) (RECEPTACLE AS WEDGE)
	400562X1	2	PIN-CONNECTOR (16-18AWG)
25	CH114-5333	1	SWITCH AS-PRESSURE (HI-LOW)
	CH102-8802	1	KIT-RECEPTACLE (2 PIN) (INCLUDES RECEPTACLE AS WEDGE)
	400511X1	1	WEDGE-RECEPTACLE LOCK (2 PIN)
	400562X1	2	PIN-CONNECTOR
26	CH4D-9517	1	CLIP
27	132-5789	2	CLIP
34	CH4P-7581	1	CLIP
38	CH4P-7581	8	CLIP

[A] PART OF 179-2180 BASE COMMON AR
[B] USE AS REQUIRED
[E] ORDER BY THE CENTIMETER

00897317
PR: t05i29k58b0162

WIRING GP-VEHICLE - 136-5669

2 OF 3
EAME ONLY

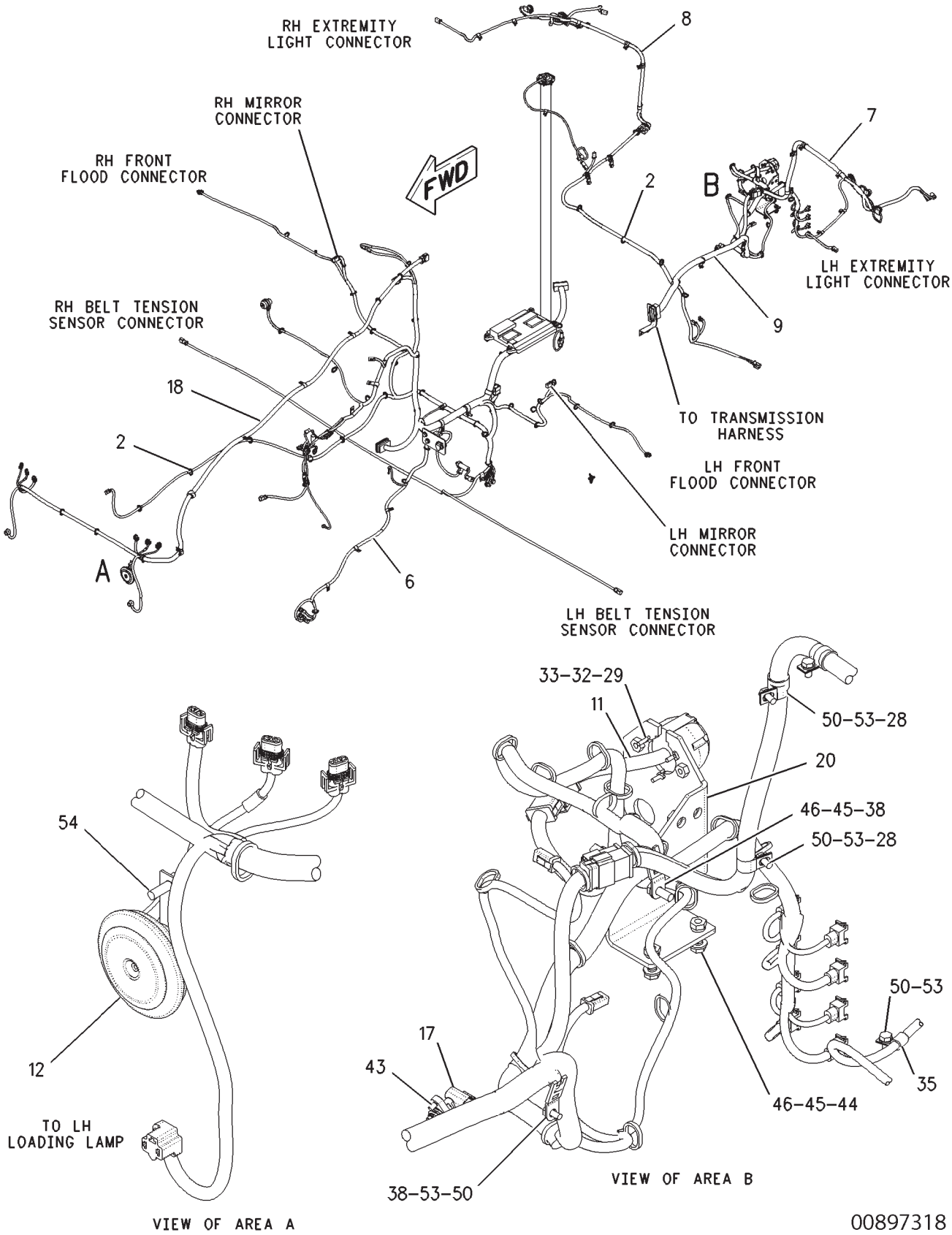

WIRING GP-VEHICLE - 136-5669

2 OF 3
EAME ONLY

ITEM	NUMBER	QTY	DESCRIPTION
-	136-5669	--	WIRING GP-VEHICLE [A] (NOT SERVICED)
2	CH7K-1181	90	STRAP-CABLE
6	136-5380	1	HARNESS AS-CHASSIS
7	226-4324	1	HARNESS AS (LH)
8	226-4325	1	HARNESS AS (RH)
9	501952D1	1	HARNESS AS (REAR)
11	502276D1	1	HARNESS AS-TRAILER
12	501998D1	1	HORN (12 VOLT)
17	CH183-4584	1	SENSOR GP-SPEED
	CH6J-2245	1	SEAL-O-RING (17.12IDX2.62DIA)
18	193-4752	1	HARNESS AS (HOOD)
20	500510D1	1	BRACKET AS
	CH8T-3612	2	NUT-WELD (M8X1.25 THD)
28	CH134-3988	11	CLIP
29	CH2N-7456	3	SCREW-MACHINE (10-24X1.5IN)
32	CH4B-2047	3	NUT (10-24 THD)
33	CH4B-4274	3	WASHER (5.5X13X1.2MM THK)
35	CH4D-7794	4	CLIP
38	CH4P-7581	8	CLIP-LADDER (15DEGX12.5MM-VCOAT)
43	400209X1	2	BOLT-SOCKET HEAD (M6X1X12MM)
44	CH8T-0389	2	LOCKNUT (M10X1.5 THD)
45	400287X1	6	WASHER-HARD (11X21X2.5MM THK)
46	400039X1	5	BOLT (M10X1.5X25MM)
50	400227X1	18	BOLT (M8X1.25X16MM)
53	400339X1	21	WASHER-HARD (8.8X16X2MM THK)
54	400341X1	3	BOLT (M8X1.25X25MM)

[A] PART OF 179-2180 BASE COMMON AR
[B] USE AS REQUIRED
[E] ORDER BY THE CENTIMETER

00897318
PR: t05i29k58b0163

WIRING GP-VEHICLE - 136-5669

3 OF 3
EAME ONLY

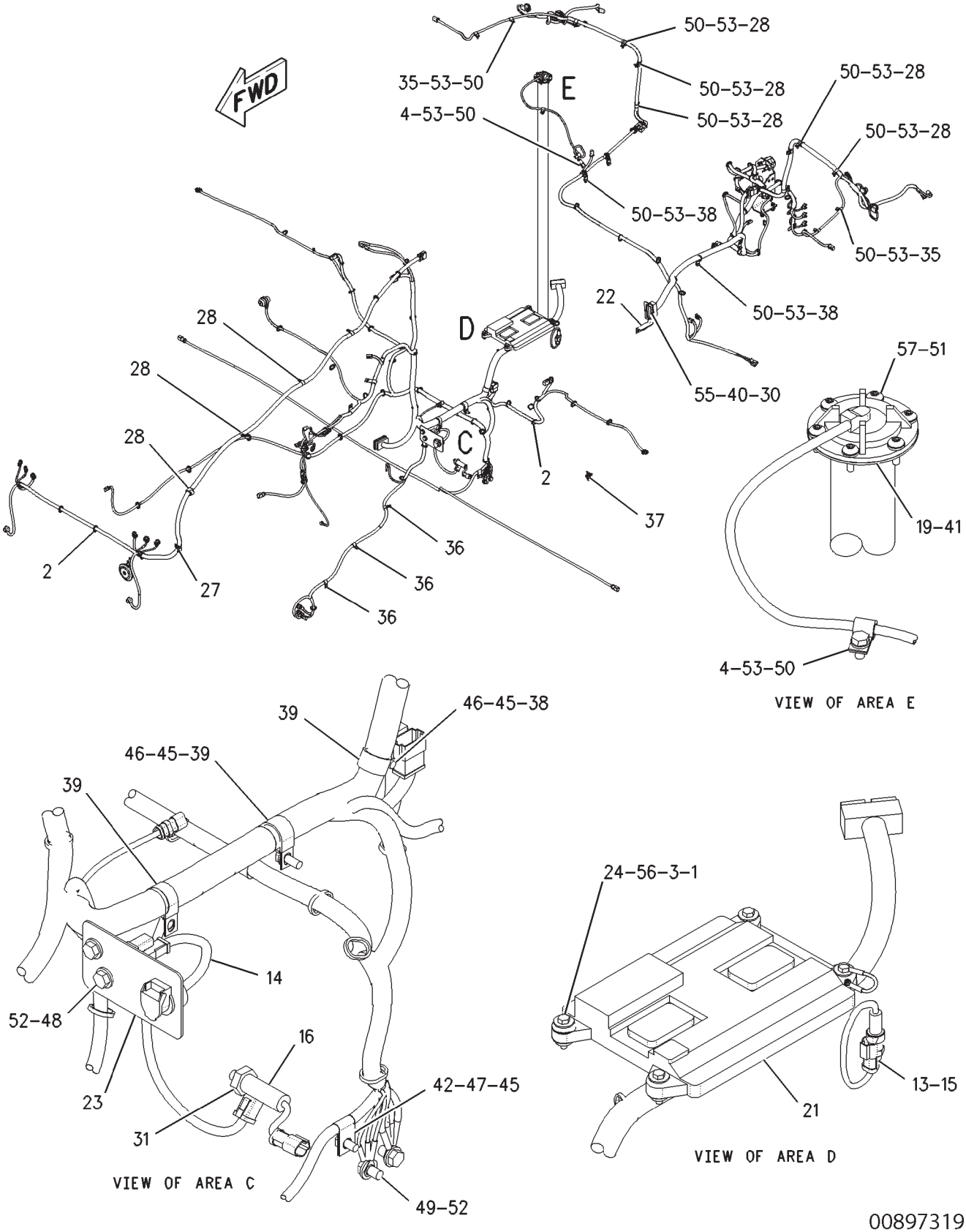

00897319

WIRING GP-VEHICLE - 136-5669

3 OF 3
EAME ONLY

ITEM	NUMBER	QTY	DESCRIPTION
-	136-5669	--	WIRING GP-VEHICLE [A] (NOT SERVICED)
1	CH6I-1418	4	SPACER (8.2X12.7X28.7MM THK)
2	CH7K-1181	90	STRAP-CABLE
3	CH8T-9655	8	MOUNT (ISOLATION)
4	CH134-3987	2	CLIP
13	CH161-9932	1	SENSOR GP-PRESSURE
			(SEE BREAKDOWN FOR COMPONENTS)
14	501962D1	1	RECEPTACLE AS (12V EXTERNAL PWR OUTLET)
	400865X1	1	RECEPTACLE AS (HSG & COVER ONLY)
	CH102-8802	1	KIT-RECEPTACLE CONNECTOR (2 PIN)
			(RECEPTACLE AND WEDGE)
	400562X1	2	PIN-CONNECTOR (16-18AWG)
15	CH173-7223	1	ADAPTER AS (4STORX6STOR)
	400318X1	1	SEAL-O-RING (11.89IDX1.98DIA)
	400361X1	1	SEAL-O-RING (8.92ID X 1.83DIA)
16	CH175-3244	1	SWITCH AS-PRESSURE
	CH102-8802	1	KIT-RECEPTACLE-3 PIN (INCL WEDGE)
	400562X1	3	PIN-CONNECTOR
19	194-7620	1	SENDER AS-FUEL LEVEL
	CH204-7458	1	KIT-SENSOR (FUEL LEVEL)
	CH102-8802	1	KIT-RECEPTACLE-2 PIN (INCL WEDGE)
21	209-0893	1	ELECTRONICS GP-MACHINE
			(TRANSMISSION/MACHINE)(NOT SERVICED)
	267-8459	1	SOFTWARE GP-POWER TRAIN
			(TRANSMISSION/MACHINE)
			(SOFTWARE ONLY)
			(LOCATED ON "ONEAGCO" OR CALL
			507-847-7222)
	178-9090	1	CONTROL GP-UNPROGRAMMED
		1	CONTROL ASM
	7X-6315	1	STRAP ASM-GROUND
	134-4126	1	WASHER (4.52X8.28X.76)
	184-2472	1	SCREW-PAN HEAD (LUBRICATED)
22	211-1171	1	BRACKET AS
23	220-4138	1	BRACKET
24	400001X1	4	BOLT (M8X1.25X40MM)
27	CH132-5789	2	CLIP
28	CH134-3988	12	CLIP

CONTINUED

[A] PART OF 179-2180 BASE COMMON AR

WIRING GP-VEHICLE - 136-5669

3 OF 3
EAME ONLY

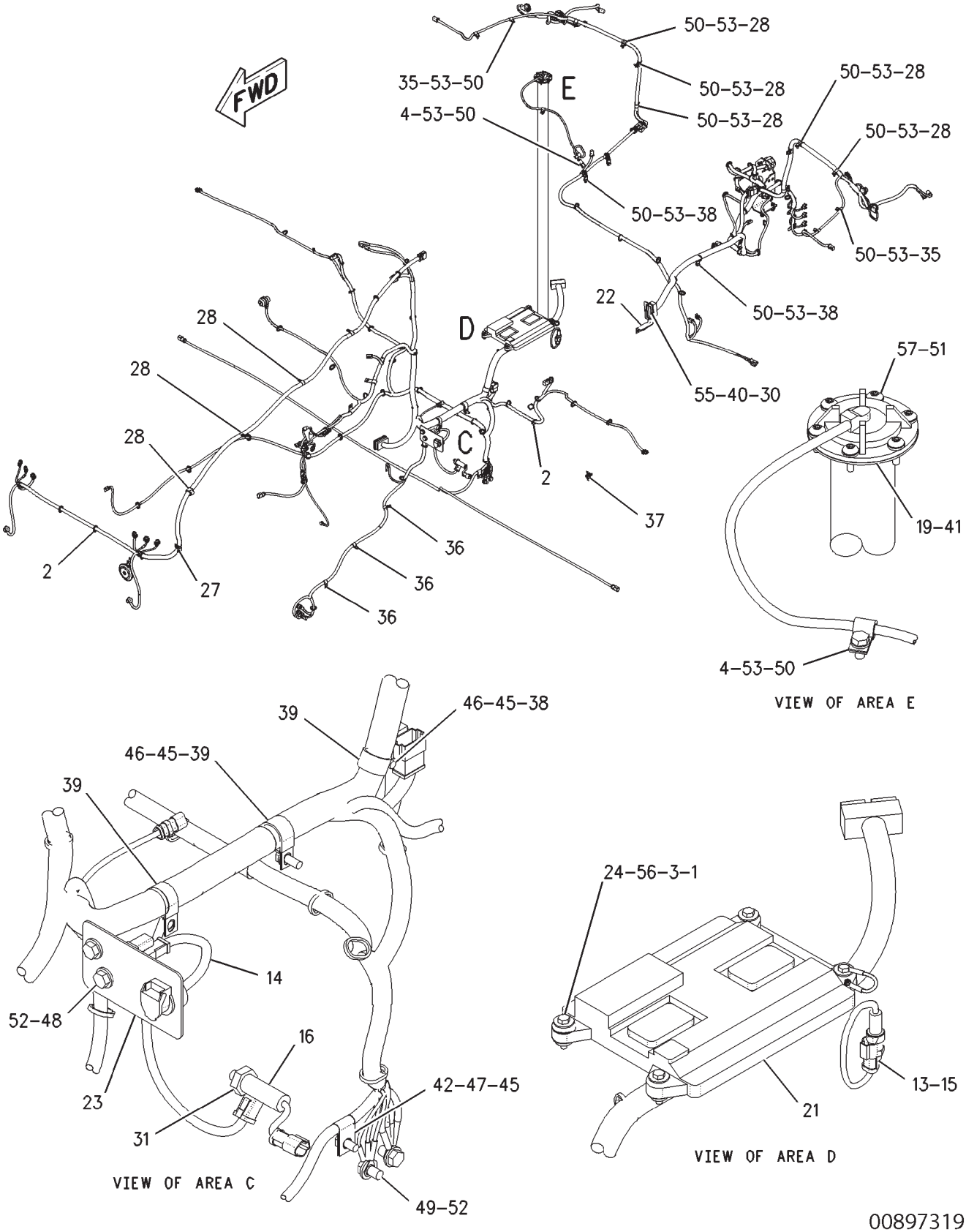

00897319

WIRING GP-VEHICLE - 136-5669

3 OF 3
EAME ONLY

ITEM	NUMBER	QTY	DESCRIPTION
-	136-5669	--	WIRING GP-VEHICLE [A] (NOT SERVICED)
30	CH3B-4501	4	LOCKWASHER
31	400318X1	1	SEAL-O-RING (11.89ID X 1.98 DIA)
35	CH4D-7794	4	CLIP-LOOP (10.00ID W/COAT)
36	CH4K-8864	3	CLIP-LOOP (14.29ID)
37	CH4P-7428	1	CLIP-LADDER (15DEGX35.5MM)
38	CH4P-7581	11	CLIP-LADDER (15DEGX12.5MM-VCOAT)
39	400597X1	3	CLIP (31.75ID 3/8)
40	CH5C-8312	4	NUT (M4X0.7 THD)
41	500014D1	1	GASKET
42	CH6S-5993	1	CLIP
45	400287X1	6	WASHER-HARD (11X21X2.5MM THK)
46	400039X1	5	BOLT (M10X1.5X25MM)
47	400040X1	1	BOLT (M10X1.5X20MM)
48	400041X1	2	BOLT (M12X1.75X30MM)
49	400055X1	2	BOLT (M12X1.75X25MM)
50	400227X1	18	BOLT (M8X1.25X16MM)
51	CH8T-4205	6	WASHER-HARD (7.2X14.5X2MM THK)
52	400357X1	4	WASHER-HARD (M12X25.5X3MM THK)
53	400339X1	21	WASHER-HARD (8.8X16X2MM THK)
55	400251X1	4	BOLT-SOCKET HEAD (M4X0.7X16MM)
56	CH9N-0869	4	WASHER-HARD (8.8X25.5X2MM THK)
57	CH9X-2045	6	SCREW-TRUSS HEAD (M6X1X20MM)

[A] PART OF 179-2180 BASE COMMON AR

00897319
PR: t05i29k58b0164

WIRING GP-SHUTOFF - 162-4096
ENGINE

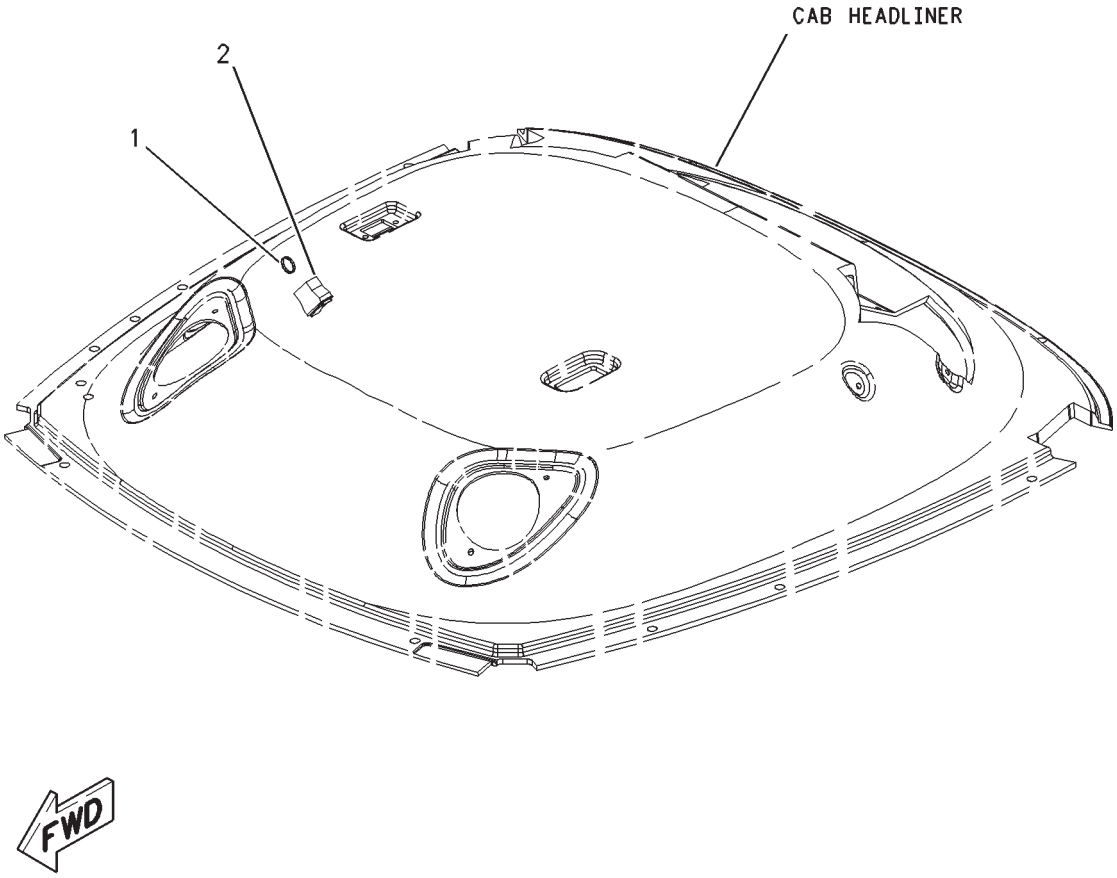

WIRING GP-SHUTOFF - 162-4096

ENGINE

ITEM	NUMBER	QTY	DESCRIPTION
-	162-4096	--	WIRING GP-SHUTOFF [A] (NOT SERVICED)
1	400837X1	1	STRAP-CABLE
2	169-8225	1	SWITCH ASM-ROCKER (ENGINE IDLE TIMER)

[A] PART OF 500843D1;500849D1 CAB AR

00664360
PR: t05i29k58b0165

WIRING GP-SHUTOFF - 173-6501
TIME DELAY LIGHTING SHUTOFF

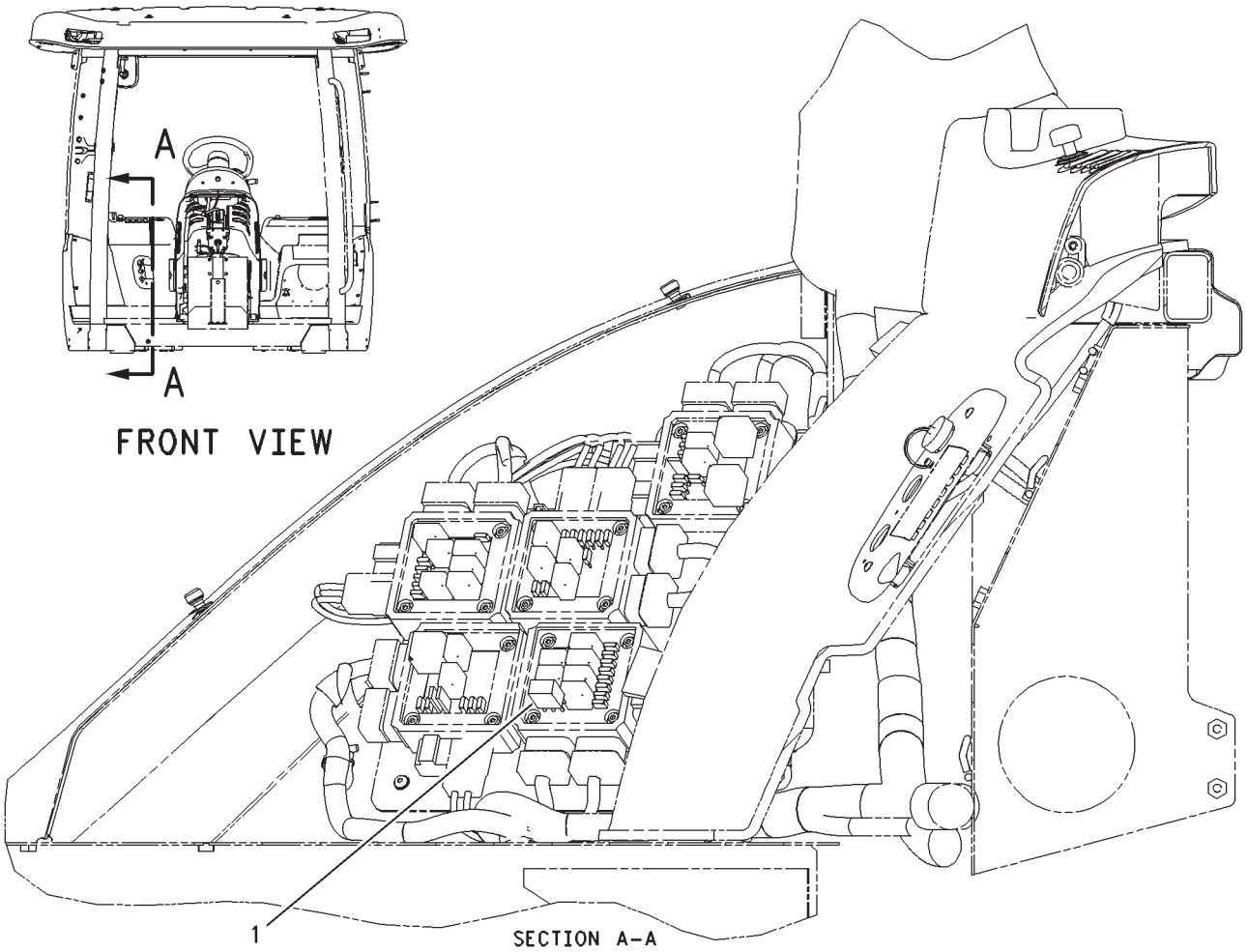

00676197

WIRING GP-SHUTOFF - 173-6501
TIME DELAY LIGHTING SHUTOFF

ITEM	NUMBER	QTY	DESCRIPTION
-	173-6501	--	WIRING GP-SHUTOFF [A] (NOT SERVICED)
1	CH146-9439	1	RELAY (12 VOLT) (WORK LIGHTS TIMER)

[A] 500841D1; 500843D1; 500849D1;
CAB AR

00676197
PR: t05i29k58b0166

WIRING GP-TRAILER - 162-4102

CONNECTOR SWITCHES
ROW & SPECIAL

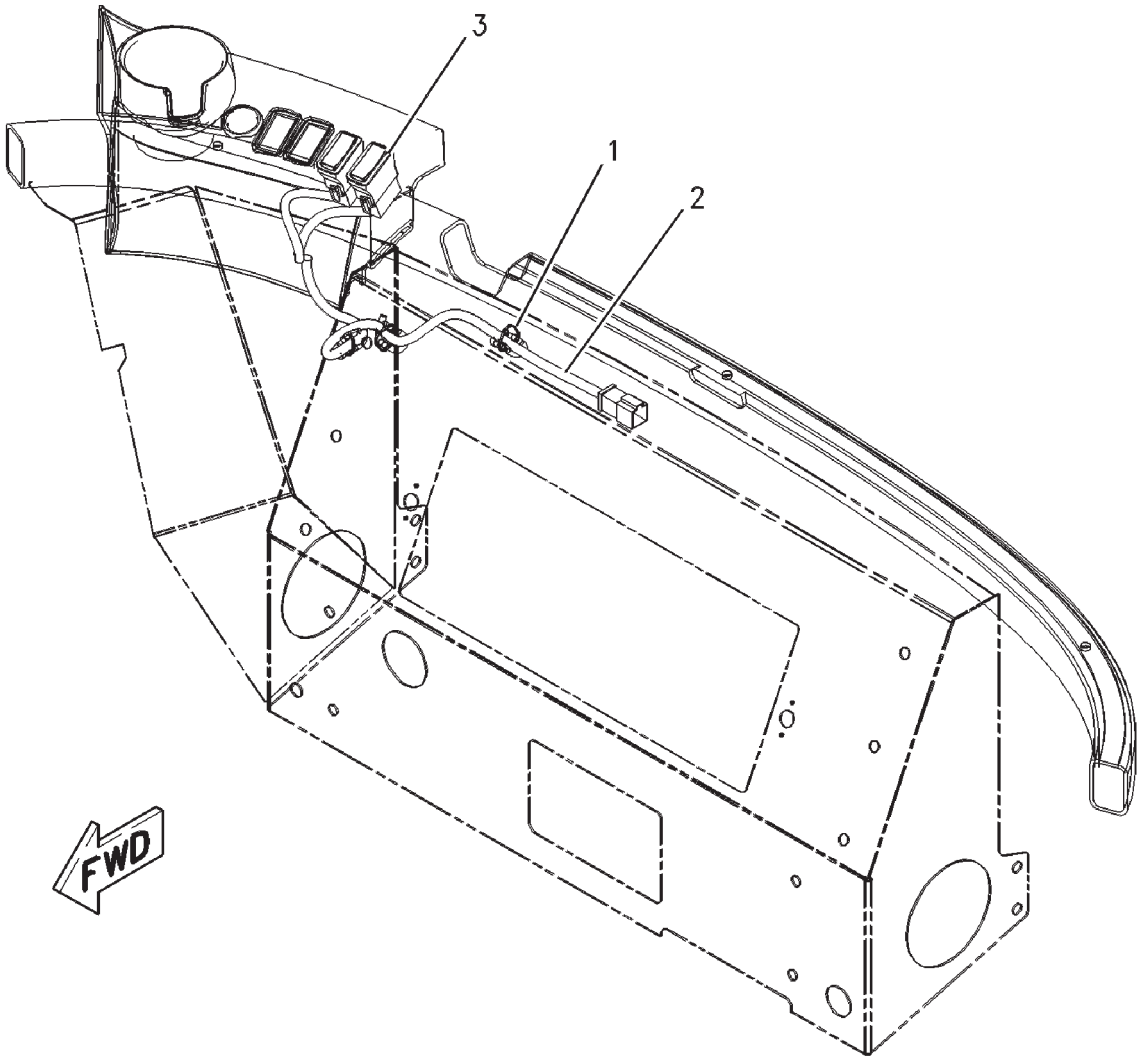

00664369

WIRING GP-TRAILER - 162-4102

CONNECTOR SWITCHES
ROW & SPECIAL

ITEM	NUMBER	QTY	DESCRIPTION
-	162-4102	--	WIRING GP-TRAILER (NOT SERVICED)
1	400837X1	3	STRAP-CABLE
2	136-5535	1	HARNESS ASM (TRAILER SWITCHES)
3	169-8230	2	SWITCH ASM-ROCKER (TRAILER)

00664369
PR: t05i29k58b0167

WIRING GP-TRAILER - 168-1945

CONNECTOR SWITCHES
EAME

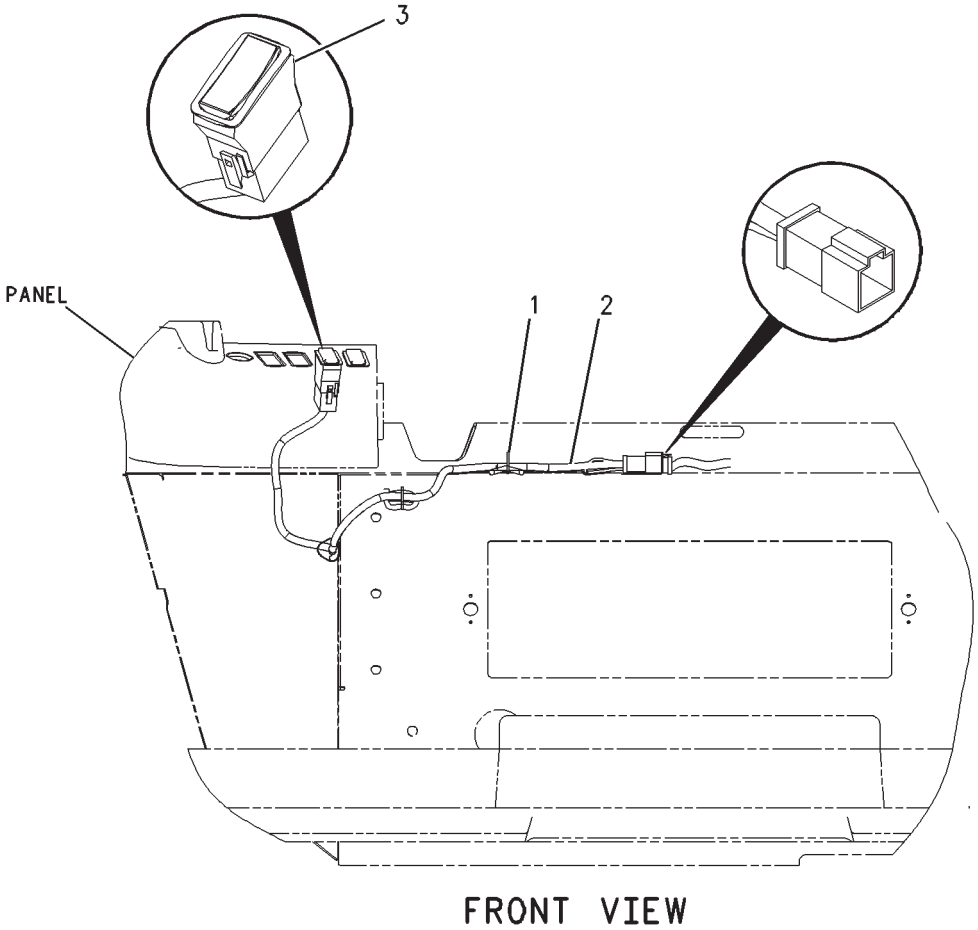

00723129

WIRING GP-TRAILER - 168-1945

CONNECTOR SWITCHES
EAME

ITEM	NUMBER	QTY	DESCRIPTION
-	168-1945	--	WIRING GP-TRAILER (NOT SERVICED)
1	400837X1	3	STRAP-CABLE
2	502198D1	1	HARNESS AS (TRAILER CONNECTOR SWITCH)
3	169-8230	1	SWITCH AS-ROCKER (TRAILER)

00723129
PR: t05i29k58b0168

SENSOR GP-PRESSURE - CH161-9932

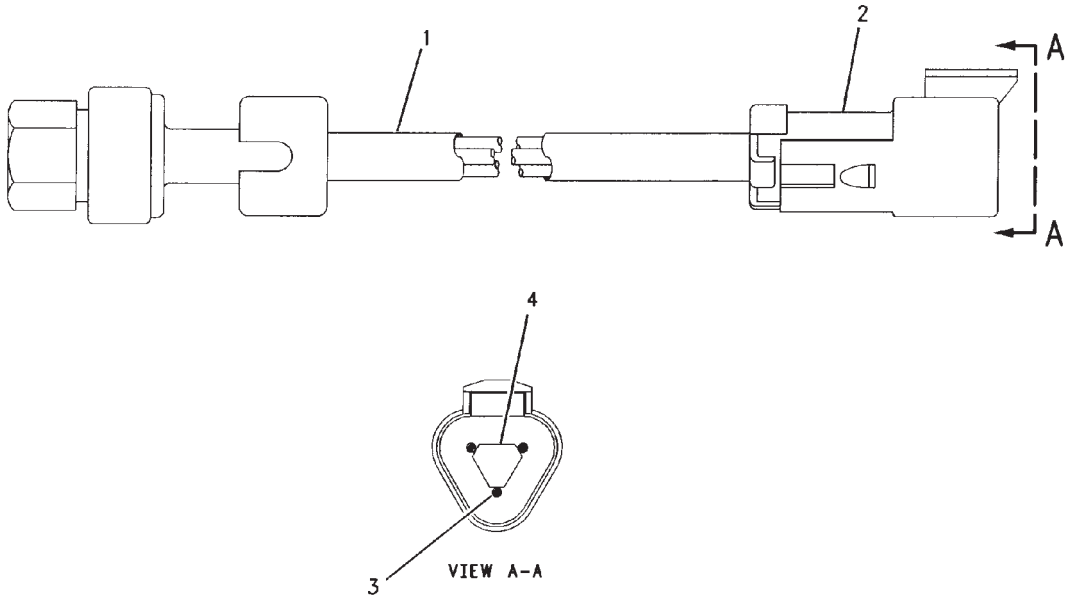

00612982

SENSOR GP-PRESSURE - CH161-9932

ITEM	NUMBER	QTY	DESCRIPTION
-	CH161-9932	--	SENSOR GP-PRESSURE [A]
1	-----		SLEEVE (15CM)
2	CH102-8803	1	KIT-RECEPTACLE AS (3 PIN)
			(INCLS ITEM 4)
3	CH180-9339	3	PIN-CONNECTOR (14-18 AWG GOLD)
	400497X1	1	PIN-CONNECTOR (14AWG)
	400706X1	1	PIN-CONNECTOR (16-18AWG)
4	CH3E-3371	1	WEDGE-RECEPT LOCK

[A] PART OF 136-5668;136-5669
WIRING GP-VEHICLE

00612982
PR: t05i29k58b0169

GUARD GP-AXLE - 208-3021

EAME ONLY

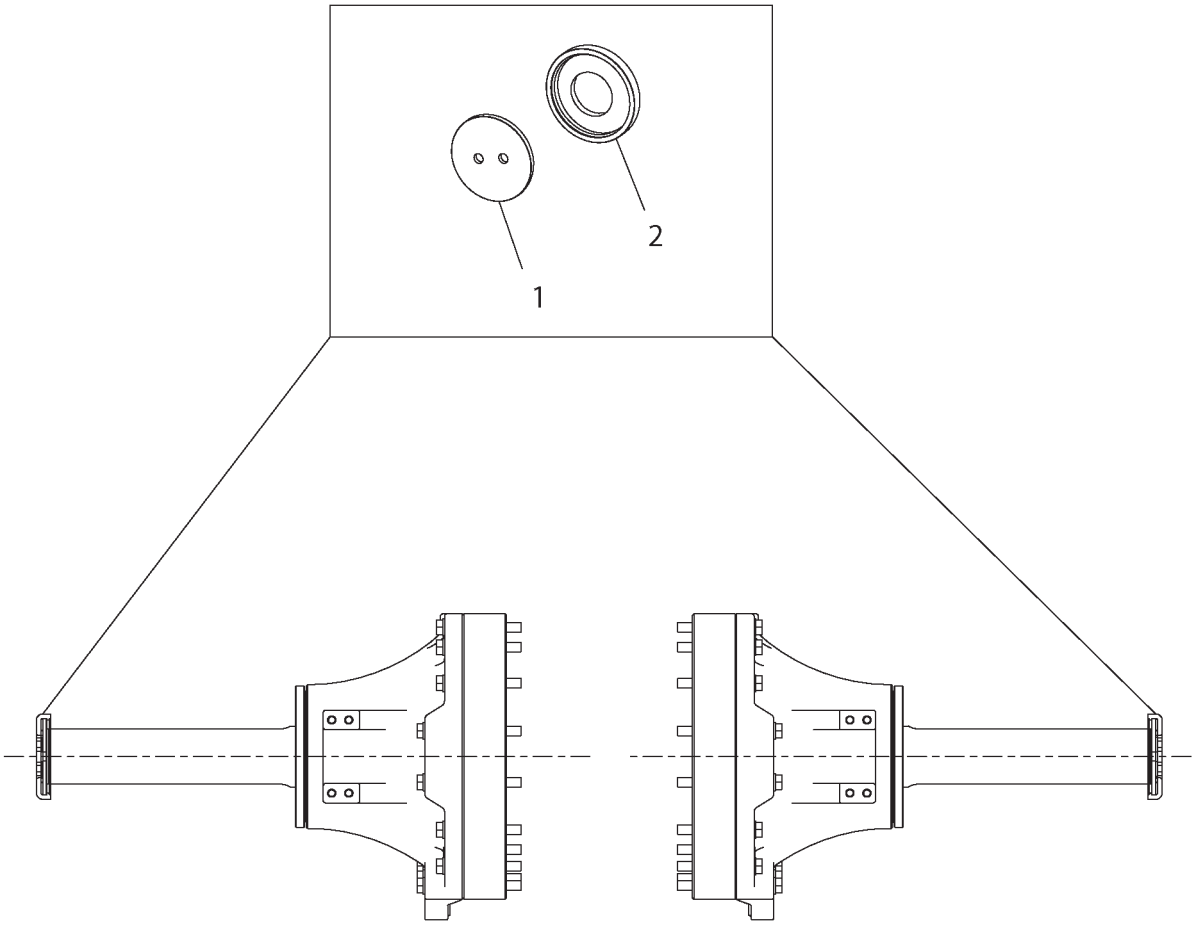

2083021A

GUARD GP-AXLE - 208-3021

EAME ONLY

ITEM	NUMBER	QTY	DESCRIPTION
-	208-3021	--	GUARD GP-AXLE [A]
1	185-8617	2	PLATE-END
2	205-8334	2	CAP

[A] PART OF BASE COMMON AR

2083021A
PR: t05i29k58b0170

DRAIN GP-ECOLOGY - CH163-0397

TO REAR TRANSMISSION
CASE ON MT800 TRACTORS

TO FRONT
TRANSMISSION CASE
ON MT700 TRACTORS

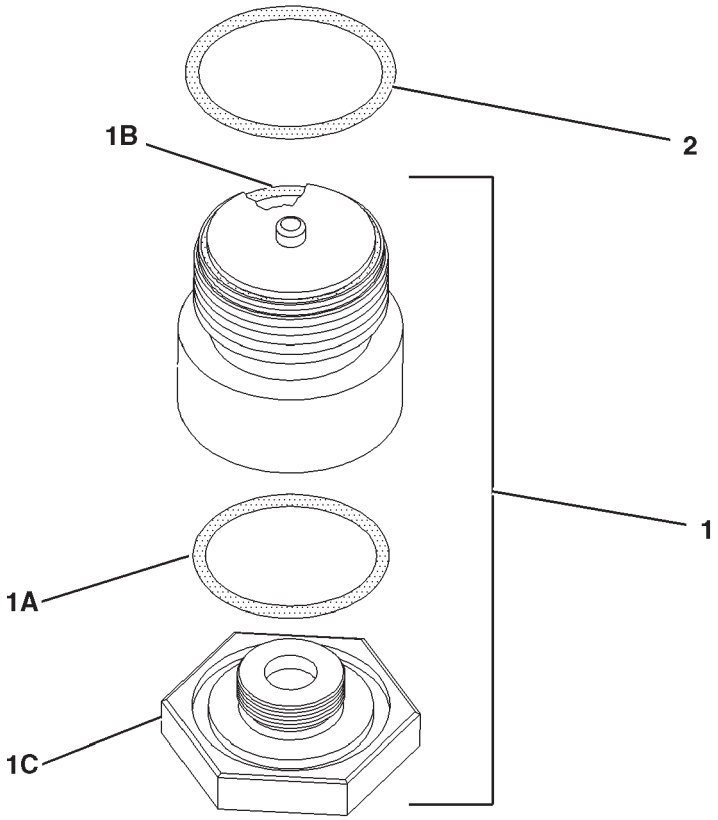

0883187A

DRAIN GP-ECOLOGY - CH163-0397

ITEM	NUMBER	QTY	DESCRIPTION
-	502901D1	--	DRAIN GP-ECOLOGY (FACT OPTION-REF ONLY) (NOT SERVICED)
-	CH163-0397	--	DRAIN GP-ECOLOGY [A] (NOT SERVICED)
1	CH173-0566	1	DRAIN GP-ECOLOGY (INCLS 1A-1C)
1A	CH2K-8199	1	SEAL-O-RING
1B	CH077-3241	1	SEAL-O-RING
1C	CH175-4966	1	PLUG (TRANSMISSION DRAIN)
2	400376X1	1	SEAL-O-RING

[A] PART OF:
179-2180 BASE COMMON AR
502901D1 DRAIN GP

0883187A
PR: t05i29k58b0171

FILLER GP-POWER TRAIN OIL - 502498D1

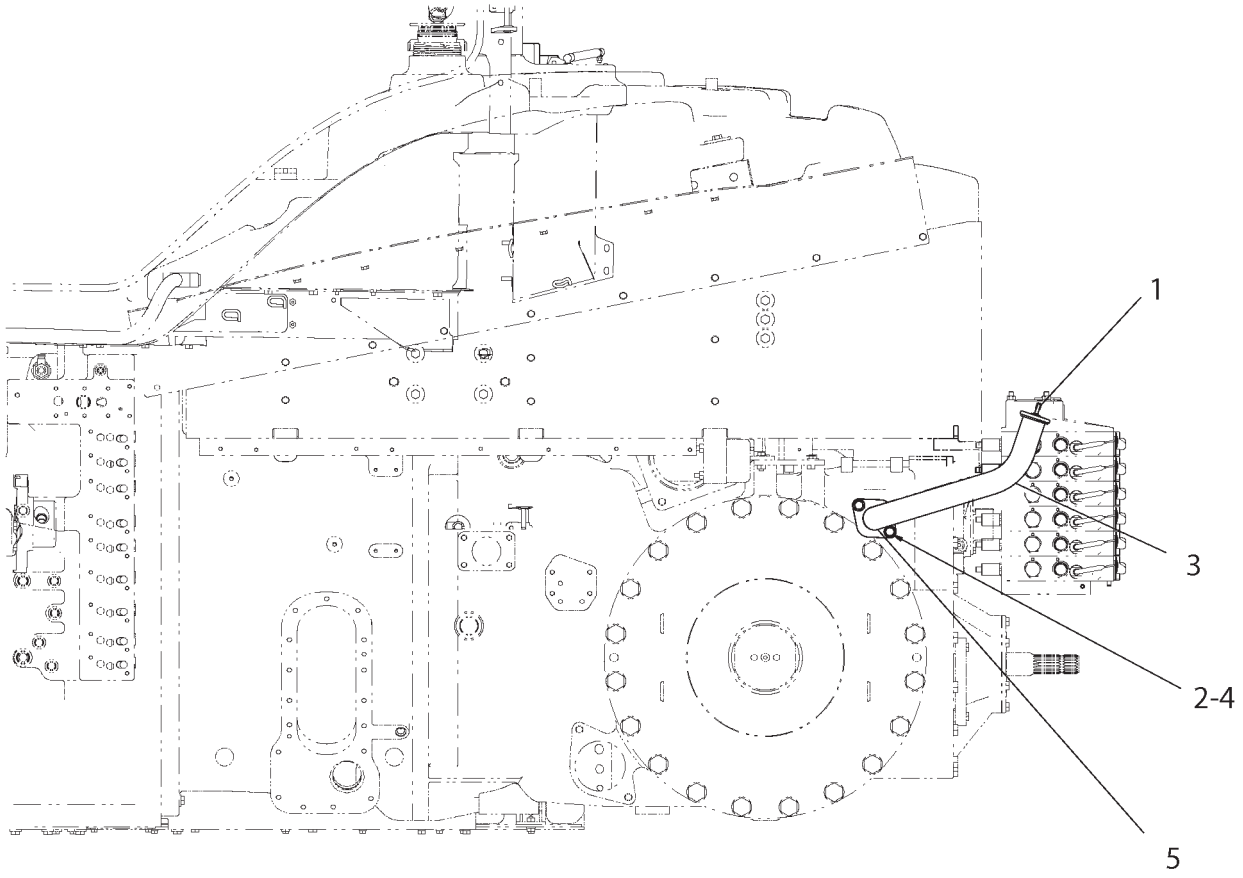

502498DA

FILLER GP-POWER TRAIN OIL - 502498D1

ITEM	NUMBER	QTY	DESCRIPTION
-	502498D1	--	FILLER GP-POWER TRAIN OIL [A] (NOT SERVICED)
1	159-1236	1	CAP-BREATHER (POWER TRAIN)
2	400055X1	2	BOLT (M12X1.75X25MM)
3	501806D1	1	TUBE ASM
4	400357X1	2	WASHER-HARD (M12X25.5X3)
5	WR516365	AR	SEALANT-GASKET 515 (50ML BOTTLE)

[A] PART OF: 179-0851; 179-0853 HITCH AR
184-5033 CONT AR-DRAWBAR

502498DA
PR: t05i29k58b0172

FILLER GP-POWER TRAIN OIL - 179-4304

(S/N: PRIOR TO BAM40556; BBP40455; BCC40654; BDS40740)

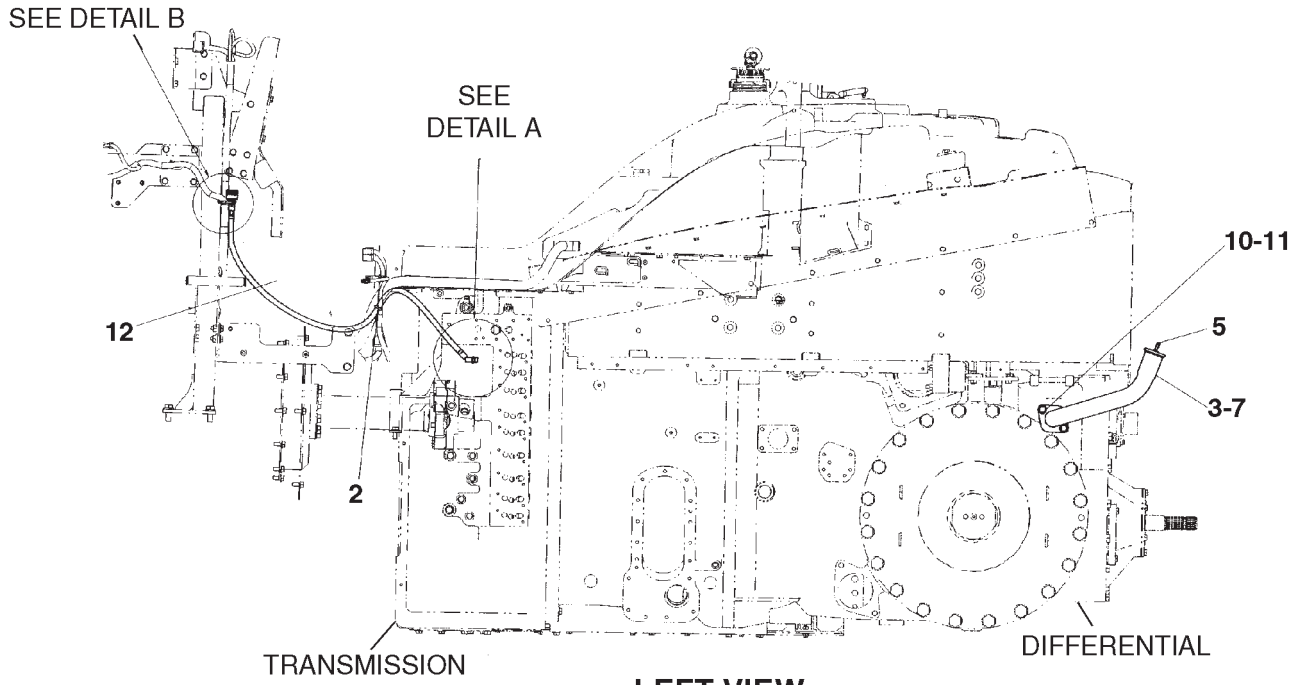

LEFT VIEW

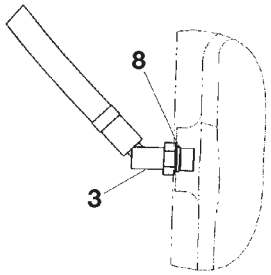

DETAIL A

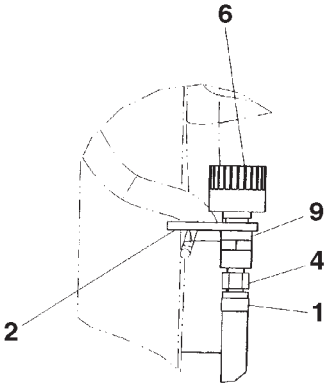

DETAIL B

0886011A

FILLER GP-POWER TRAIN OIL - 179-4304

(S/N: PRIOR TO BAM40556; BBP40455; BCC40654; BDS40740)

ITEM	NUMBER	QTY	DESCRIPTION
-	179-4304	--	FILLER GP-POWER TRAIN OIL [A] (NOT SERVICED)
1	CH1P-4278	2	CLAMP-HOSE
2	CH7K-1181	2	STRAP-CABLE
3	CH7X-1448	1	ELBOW
4	CH006-6586	1	CONNECTOR-HOSE
5	159-1236	1	CAP-BREATHER (POWER TRAIN)
6	400831X1	1	BREATHER (POWER TRAIN)
7	220-3810	1	TUBE ASM
8	400318X1	1	SEAL-O-RING (11.89ID X 1.98 DIA)
9	CH8S-7169	1	COUPLING
10	400055X1	2	BOLT (M12X1.75X25MM)
11	400357X1	2	WASHER-HARD (M12X25.5X3)
12	CH5P-1442	110	HOSE (ORDER cm)
	1U-8846		SEALANT-GASKET (USE AS REQUIRED)

[A] PART OF 156-5581;156-5582;156-5583; 156-5584;179-2193;179-2194;179-2195; 179-2196 BASE UNIT AR

0886011A
PR: t05i29k58b0173

BREATHER GP-POWERTRAIN - 502496D1

(S/N: EFF BAM40556; BBP40455; BCC40654; BDS40740)

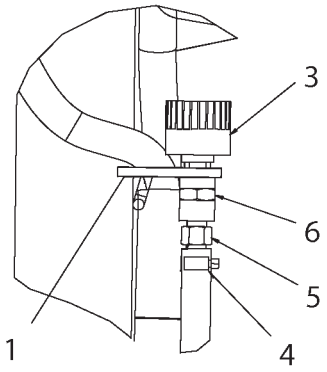

DETAIL B

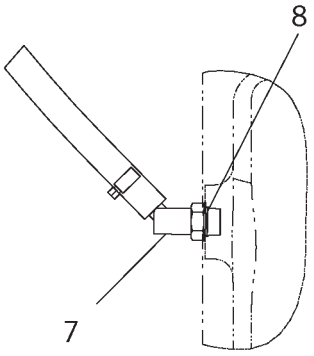

DETAIL A

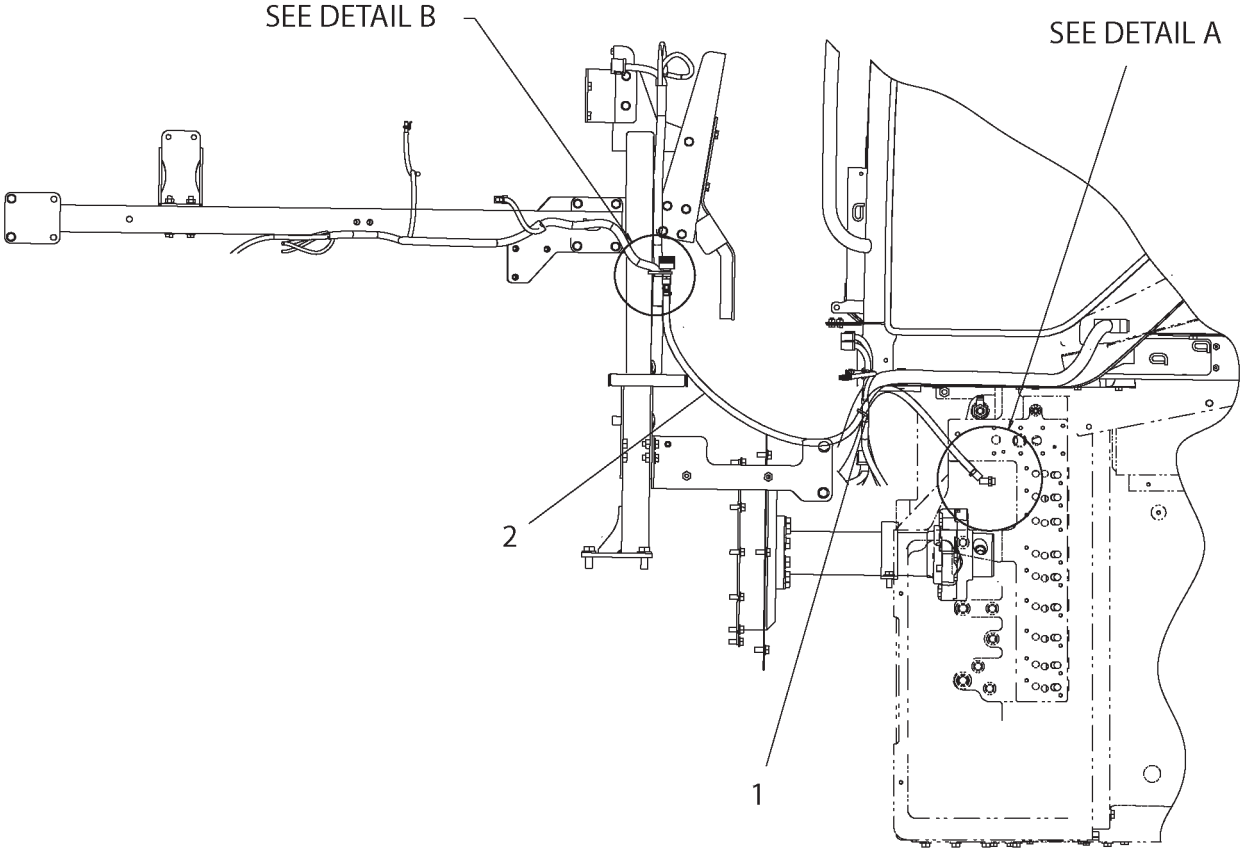

502496DA

BREATHER GP-POWERTRAIN - 502496D1

(S/N: EFF BAM40556; BBP40455; BCC40654; BDS40740)

ITEM	NUMBER	QTY	DESCRIPTION
-	502496D1	--	BREATHER GP-POWERTRAIN [A] (NOT SERVICED)
1	CH7K-1181	2	STRAP-CABLE 0.19-4.00
2	CH5P-1442	--	HOSE-BULK 9.52ID HI TEMP (110CM)
3	400831X1	1	BREATHER-1/4-18 NPTF
4	CH1P-4278	2	CLAMP-HOSE 5.5-15.88 ID X 8
5	CH006-6586	1	CONNECTOR-4NPTFX9.52 OD BARB
6	CH8S-7169	1	COUPLING-4NPTF HEX
7	CH7X-1448	1	ELBOW-45DEG 6STOR X 9.52 BARB
8	400318X1	1	SEAL-O-RING (11.89ID X 1.98 DIA)

[A] PART OF: 156-5581;156-5582;156-5583; 156-5584;179-2193;179-2194;179-2195; 179-2196 BASE UNIT AR

502496DA
PR: t05i29k58b0174

SHAFT GP-INPUT - 163-0383

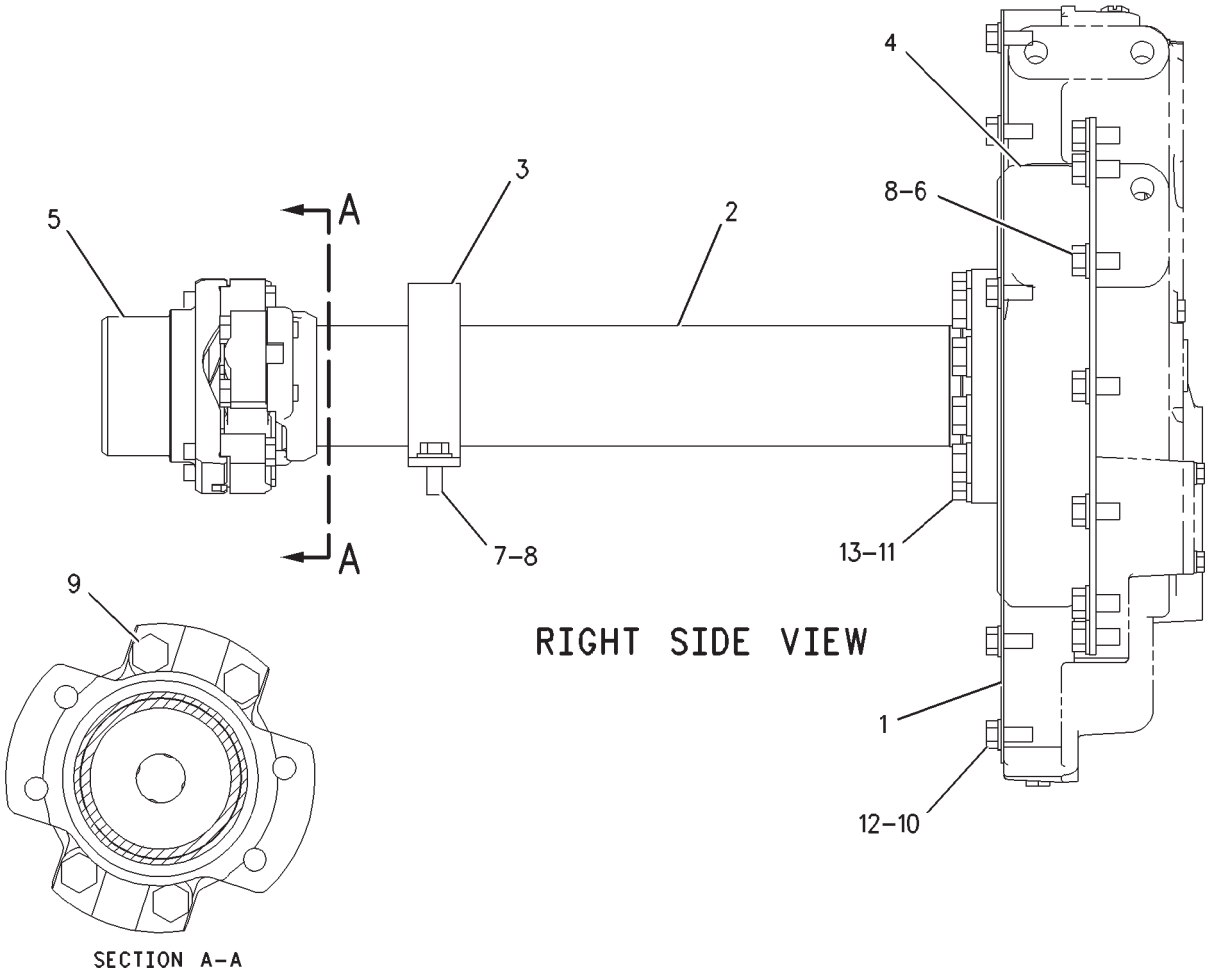

00887891

SHAFT GP-INPUT - 163-0383

ITEM	NUMBER	QTY	DESCRIPTION
-	163-0383	--	SHAFT GP-INPUT [A] (NOT SERVICED)
1	CH102-0409	1	COVER
2	163-0412	1	UNIVERSAL JOINT GP [A]
	400057X1	4	BOLT (M12X1.75X50MM)
	CH9P-0356	1	SPIDER & BEARING
3	163-0425	1	BRACKET
4	501929D1	1	COUPLING
5	501929D1	1	YOKE ASM (INCLUDES PLUG)
	CH3T-8747	1	PLUG-CORE
	6V-6640		SEALANT (USE AS REQUIRED)
6	400154X1	12	BOLT (1/2-13X25MM)
7	400041X1	2	BOLT (M12X1.75X30MM)
8	400357X1	14	WASHER-HARD (M12X25.5X3)
9	400063X1	4	BOLT (M12X1.75X60MM)
10	400358X1	6	WASHER (7/16X22.5X2.5)
11	400244X1	10	BOLT (M16X2.0X45MM)
12	400069X1	6	BOLT (7/16-14X1 IN)
13	400082X1	10	WASHER (17.5X30X3.5)

[A] PART OF 172-5361;172-5362;187-1741;
187-1742 INSTALLATION AR-ENGINE

00887891
PR: t05i29k58b0175

SHAFT GP-INPUT - 163-0384
MT855 & MT865

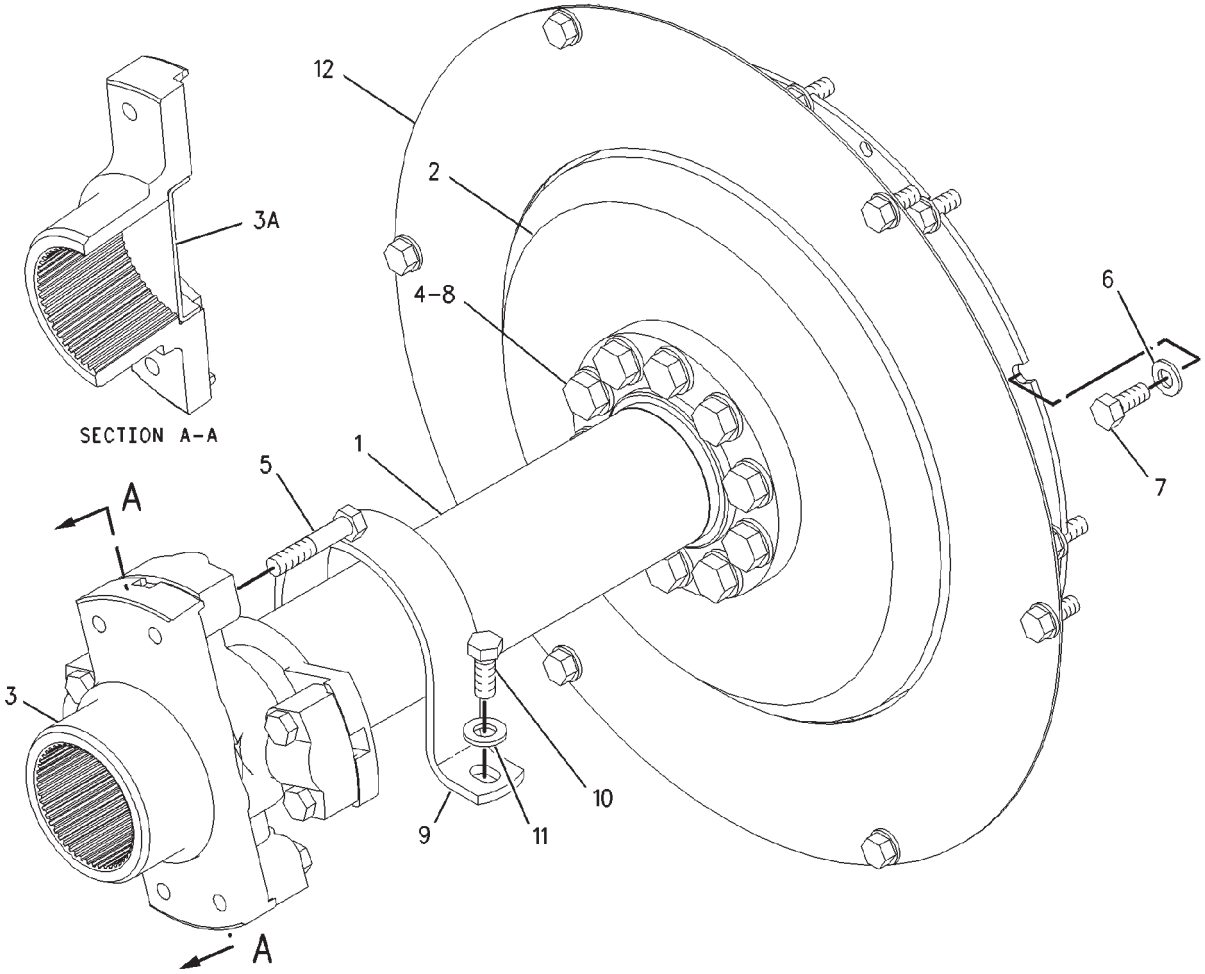

00867568

SHAFT GP-INPUT - 163-0384

MT855 & MT865

ITEM	NUMBER	QTY	DESCRIPTION
-	163-0384	--	SHAFT GP-INPUT [A] (NOT SERVICED)
1	163-0414	1	UNIVERSAL JOINT GP (SEE BREAKDOWN FOR COMPONENTS)
2	501931D1	1	COUPLING AS-FLYWHEEL
3	501787D1	1	YOKE ASM
4	400244X1	10	BOLT (M16X2.0X45MM)
5	400063X1	4	BOLT (M12X1.75X60MM)
6	400358X1	18	WASHER (7/16X22.5X2.5)
7	400069X1	18	BOLT (7/16-14X1 IN)
8	400082X1	10	WASHER (17.5X30X3.5)
9	163-0425	1	BRACKET
10	400041X1	2	BOLT (M12X1.75X30MM)
11	400357X1	2	WASHER-HARD (M12X25.5X3)
12	163-0405	1	COVER

[A] PART OF 172-5363;172-5364;187-1743;
187-1744 INSTALLATION AR-ENGINE

00867568
PR: t05i29k58b0176

UNIVERSAL JOINT GP - 163-0414

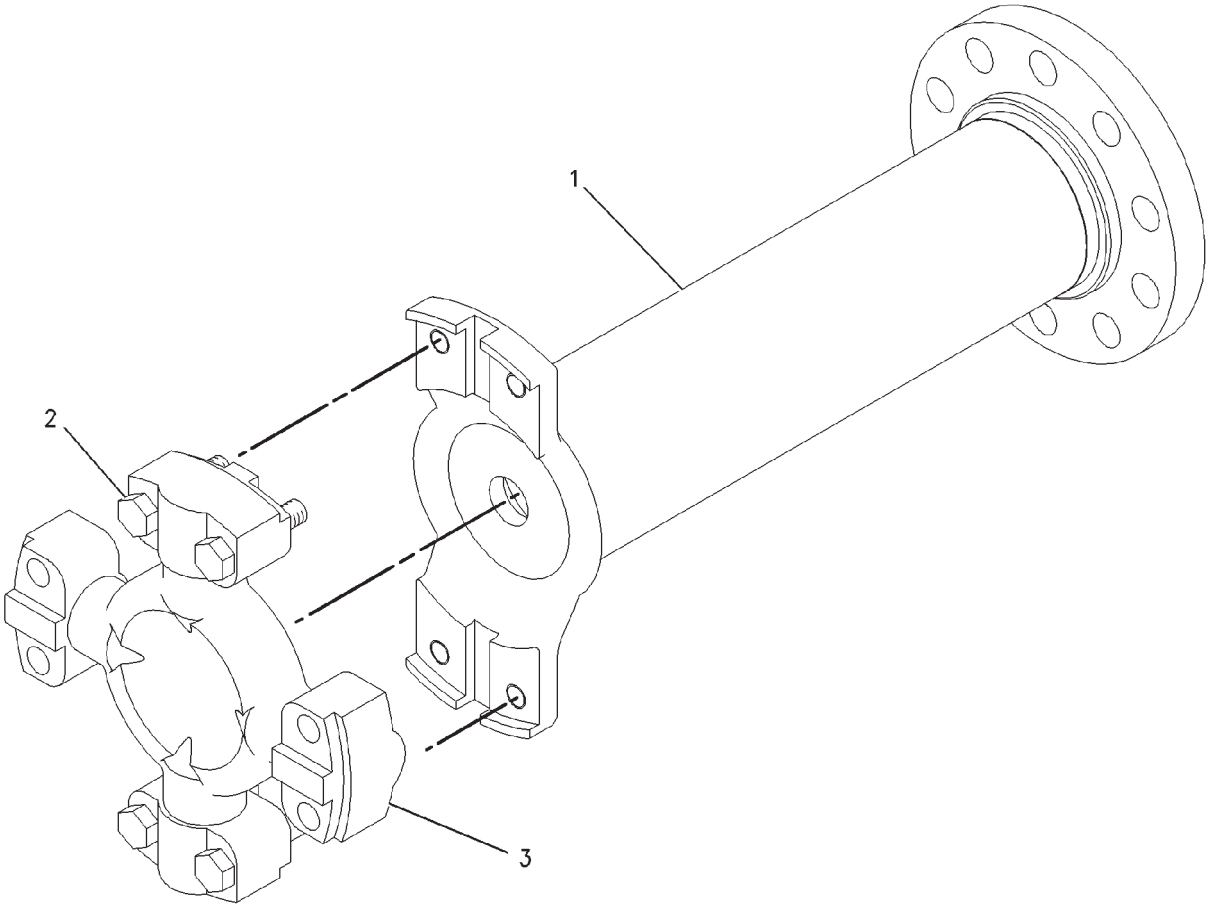

00750174

UNIVERSAL JOINT GP - 163-0414

ITEM	NUMBER	QTY	DESCRIPTION
-	163-0414	--	UNIVERSAL JOINT GP [A]
1	163-0415	1	TUBE
2	400057X1	4	BOLT (M12X1.75X50MM)
3	CH9P-4809	1	SPIDER & BEARING AS

[A] PART OF 163-0384 SHAFT GP-INPUT

00750174
PR: t05i29k58b0177

200-5027 POWER TRAIN AR - WITH PTO
(2286-3251MM/90-128") GAGE

NO ILLUSTRATION

NOTIF

200-5027 POWER TRAIN AR - WITH PTO
(2286-3251MM/90-128") GAGE

ITEM	NUMBER	QTY	DESCRIPTION
-	200-5027	--	POWER TRAIN AR (NOT SERVICED)
	185-3955	1	AXLE AR (NOT SERVICED) (SEE BREAKDOWN FOR COMPONENTS)
	211-8277	1	FASTENER GP-FINAL DRIVE (NOT SERVICED) (SEE BREAKDOWN FOR COMPONENTS)
	152-5242	1	TRANSMISSION AR (SEE BREAKDOWN FOR COMPONENTS)

NOTIF
PR: t05i29k58b0178

200-5028 POWER TRAIN AR-WITH PTO
(2286-2600MM/90-102") GAGE

NO ILLUSTRATION

NOTIF

200-5028 POWER TRAIN AR-WITH PTO
(2286-2600MM/90-102") GAGE

ITEM	NUMBER	QTY	DESCRIPTION
-	200-5028	--	POWER TRAIN AR (NOT SERVICED)
	185-3956	1	AXLE AR (NOT SERVICED) (SEE BREAKDOWN FOR COMPONENTS)
	211-8277	1	FASTENER GP-FINAL DRIVE (NOT SERVICED) (SEE BREAKDOWN FOR COMPONENTS)
	152-5242	1	TRANSMISSION AR (SEE BREAKDOWN FOR COMPONENTS)

NOTIF
PR: t05i29k58b0179

200-5029 POWER TRAIN AR - W/ PTO

NO ILLUSTRATION

NOTIF

200-5029 POWER TRAIN AR - W/ PTO

ITEM	NUMBER	QTY	DESCRIPTION
-	200-5029	--	POWER TRAIN AR (NOT SERVICED)
1	152-5242	1	TRANSMISSION AR (SEE BREAKDOWN FOR COMPONENTS)
2	185-3957	1	AXLE AR (NOT SERVICED) (SEE BREAKDOWN FOR COMPONENTS)
3	211-8277	1	FASTENER GP-FINAL DRIVE (NOT SERVICED) (SEE BREAKDOWN FOR COMPONENTS)

NOTIF
PR: t05i29k58b0180

200-5030 POWER TRAIN AR WITHOUT PTO

NO ILLUSTRATION

NOTIF

200-5030 POWER TRAIN AR WITHOUT PTO

ITEM	NUMBER	QTY	DESCRIPTION
-	200-5030	--	POWER TRAIN AR (NOT SERVICED)
1	152-5242	1	TRANSMISSION AR (SEE BREAKDOWN FOR COMPONENTS)
2	185-3958	1	AXLE AR (NOT SERVICED) (SEE BREAKDOWN FOR COMPONENTS)
3	211-8277	1	FASTENER GP-FINAL DRIVE (NOT SERVICED) (SEE BREAKDOWN FOR COMPONENTS)

[N] NEW PART

NOTIF
PR: t05i29k58b0181

155-9579 CASE & PARTS GP-PLANETARY

S/N: 9YY1-950

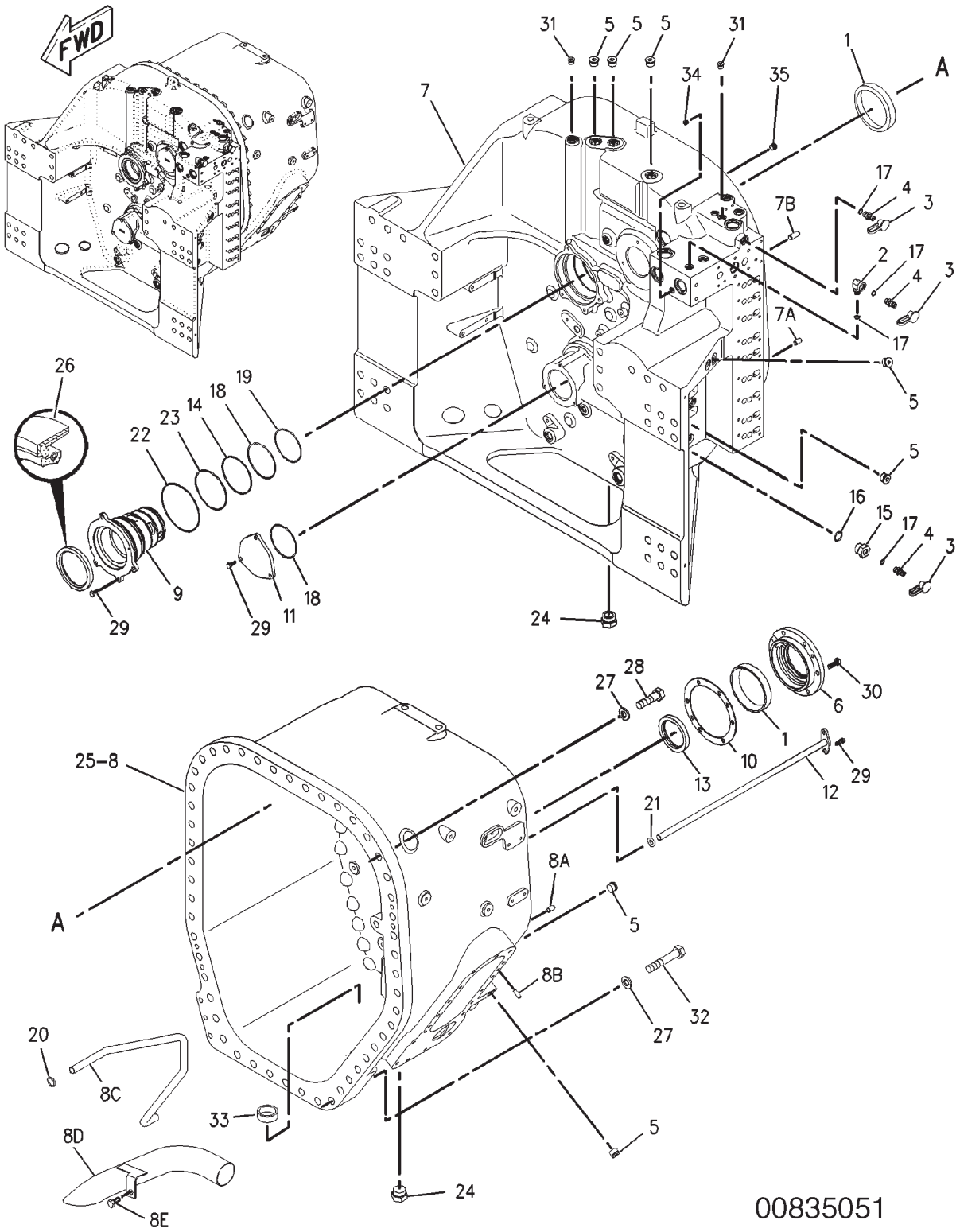

155-9579 CASE & PARTS GP-PLANETARY

S/N: 9YY1-950

ITEM	NUMBER	QTY	DESCRIPTION
-	155-9579	--	CASE & PARTS GP-PLANETARY [A]
			(NOT SERVICED)
1	6F-2956	8	CUP-BEARING
2	6V-0484	1	ADAPTER-O-RING
3	6V-0852	3	CAP-DUST
4	6V-3965	3	FITTING AS
5	9S-8006	7	PLUG
	2M-9780	1	SEAL-O-RING
6	177-6741	4	CAGE-BEARING
7	177-6774	1	CASE AS (FRONT)
	211-2731	1	TUBE
7A	3F-0957	2	DOWEL
7B	5M-7937	2	DOWEL
8	177-6775	1	CASE AS (REAR)
8A	3F-0957	2	DOWEL
8B	5B-5821	2	DOWEL
8C	177-6800	1	TUBE
8D	161-8222	1	TUBE AS
8E	6A-5591	1	BOLT (M12X1.75X25-MM)
9	232-0345	1	HOUSING
10	187-1376	4	SHIM PACK (INCLUDES 13-SHIMS)
11	188-2162	3	COVER
12	188-9912	1	TUBE AS
13	9X-7719	1	SEAL-LIP TYPE
14	1T-1068	1	SEAL-O-RING
15	2P-8421	1	ADAPTER-O-RING
16	3D-2824	1	SEAL-O-RING
17	3J-1907	4	SEAL-O-RING
18	3K-0715	4	SEAL-O-RING
19	4F-4097	1	SEAL-O-RING
20	4J-8996	1	SEAL-O-RING
21	5H-8038	1	SEAL-O-RING
22	5J-3886	1	SEAL-O-RING
23	6S-3002	1	SEAL-O-RING
24	9S-4181	2	PLUG
	7M-8485	2	SEAL-O-RING
25	1U-8846	AR	SEALANT-GASKET
26	8C-3075	1	SEAL-LIP TYPE
27	8T-4123	50	WASHER-PLATED (22X35X3.5-MM THK)
28	8T-4141	38	BOLT (M20X2.5X70-MM)
29	8T-4189	15	BOLT (M8X1.25X20-MM)
30	8T-4195	24	BOLT (M10X1.5X30-MM)
31	9S-8004	2	PLUG
	3J-1907	2	SEAL-O-RING
32	7X-2566	12	BOLT (M20X2.5X110-MM)
33	8M-7160	1	MAGNET
34	7J-0204	1	SEAL-O-RING
	9S-8007	1	PLUG
35	3K-0360	16	SEAL-O-RING
	9S-8005	16	PLUG

[A] PART OF 152-5242 TRANSMISSION AR

00835051
PR: t05i29k58b0182

155-9579 CASE & PARTS GP-PLANETARY
S/N: 9YY951-UP

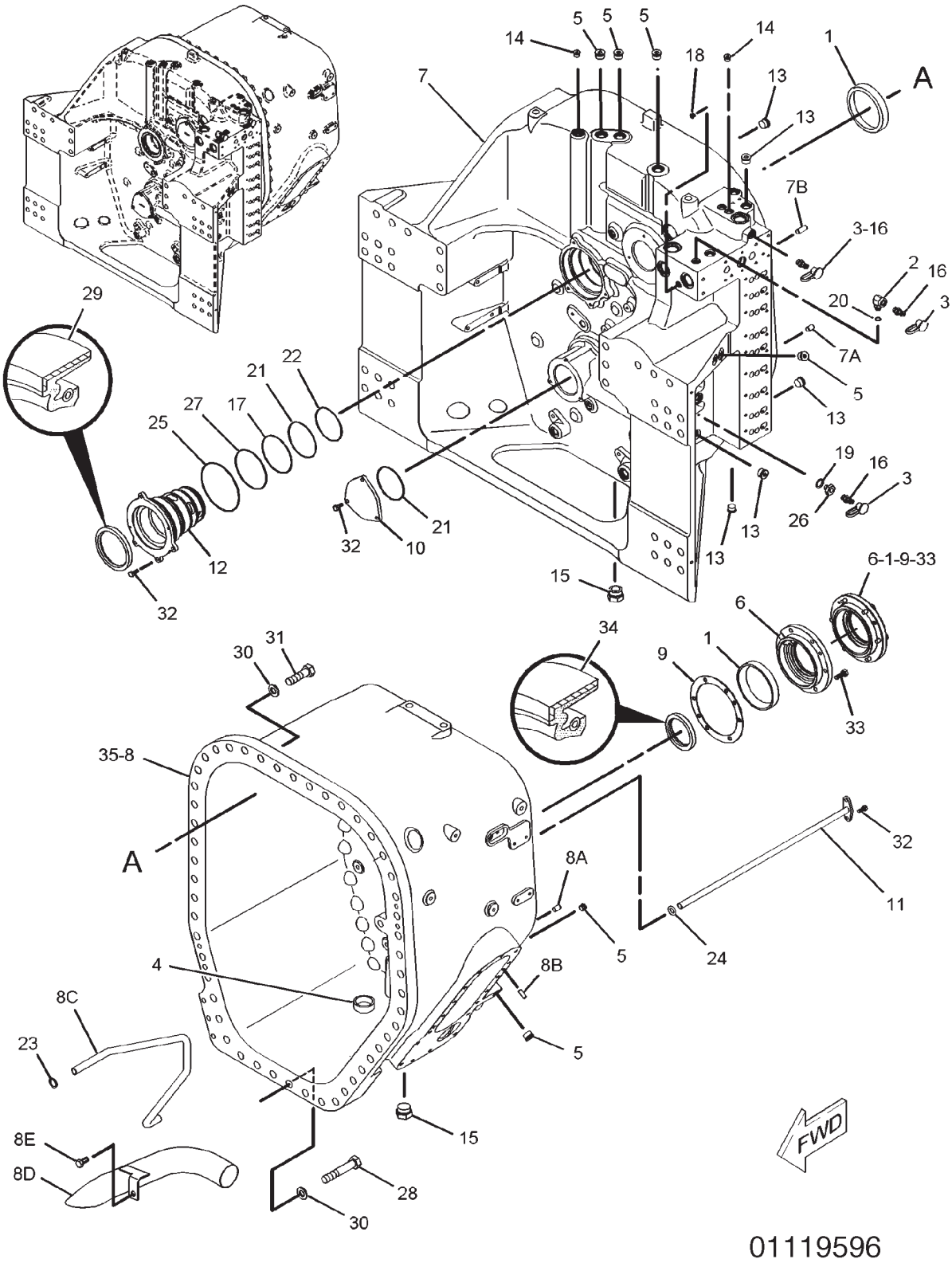

155-9579 CASE & PARTS GP-PLANETARY

S/N: 9YY951-UP

ITEM	NUMBER	QTY	DESCRIPTION
-	155-9579	--	CASE & PARTS GP-PLANETARY [A] (NOT SERVICED)
1	6F-2956	8	CUP-BEARING
2	6V-0484	1	ADAPTER-O-RING
3	6V-0852	3	CAP-DUST
4	8M-7160	1	MAGNET
5	164-5619	6	PLUG AS
	9S-8006	1	PLUG
	2M-9780	1	SEAL-O-RING
6	177-6741	4	CAGE-BEARING
7	177-6774	1	CASE AS (FRONT)
	211-2731	1	TUBE
7A	3F-0957	2	DOWEL
7B	5M-7937	2	DOWEL
8	177-6775	1	CASE AS (REAR)
8A	3F-0957	2	DOWEL
8B	5B-5821	2	DOWEL
8C	177-6800	1	TUBE
8D	161-8222	1	TUBE AS
8E	6A-5591	1	BOLT (M12X1.75X25-MM)
9	187-1376	4	SHIM PACK (INCLUDES 13-SHIMS)
10	188-2162	3	COVER
11	188-9912	1	TUBE AS
12	232-0345	1	HOUSING-SEAL
13	148-8395	16	PLUG AS
	3K-0360	1	SEAL-O-RING
	9S-8005	1	PLUG
14	162-0177	2	PLUG AS
	9S-8004	1	PLUG
	3J-1907	1	SEAL-O-RING
15	164-4180	2	PLUG AS
	9S-4181	1	PLUG
	7M-8485	1	SEAL-O-RING
16	164-5567	3	FITTING GP-COUPLING
	3J-1907	1	SEAL-O-RING
	6V-3965	1	FITTING AS
17	1T-1068	1	SEAL-O-RING
18	207-8218	1	PLUG AS
	7J-0204	1	SEAL-O-RING
	9S-8007	1	PLUG
19	2M-9780	1	SEAL-O-RING
20	3J-1907	1	SEAL-O-RING
21	3K-0715	4	SEAL-O-RING
22	4F-4097	1	SEAL-O-RING
23	4J-8996	1	SEAL-O-RING
24	5H-8038	1	SEAL-O-RING
25	5J-3886	1	SEAL-O-RING

CONTINUED

[A] PART OF 152-5242 TRANSMISSION AR

155-9579 CASE & PARTS GP-PLANETARY
S/N: 9YY951-UP

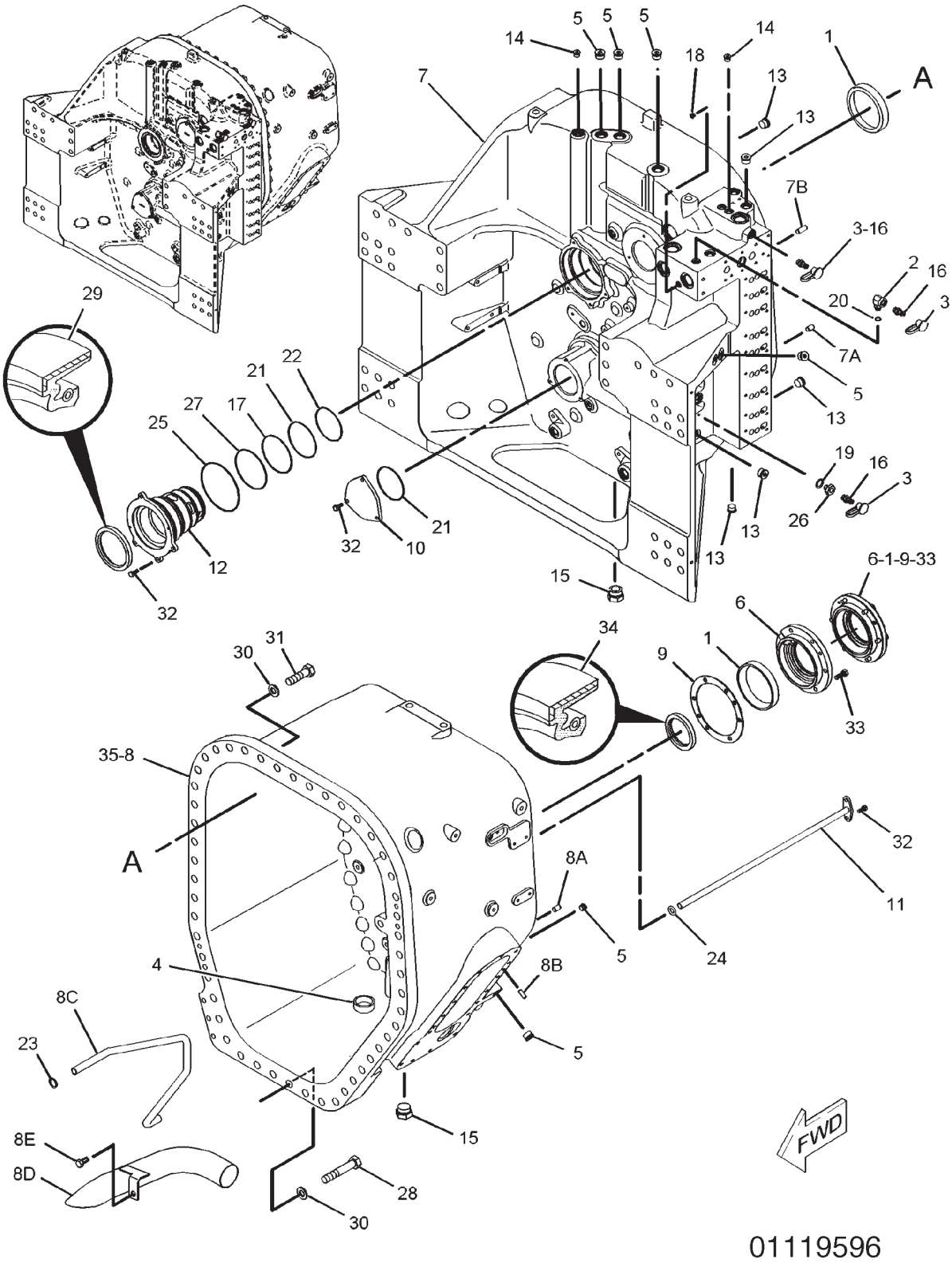

155-9579 CASE & PARTS GP-PLANETARY

S/N: 9YY951-UP

ITEM	NUMBER	QTY	DESCRIPTION
-	155-9579	--	CASE & PARTS GP-PLANETARY[A] (NOT SERVICED)
26	5P-1404	1	ADAPTER-O-RING
27	6S-3002	1	SEAL-O-RING
28	7X-2566	12	BOLT (M20X2.5X110-MM)
29	8C-3075	1	SEAL-LIP TYPE
30	8T-4123	50	WASHER-PLATED (22X35X3.5-MM THK)
31	8T-4141	38	BOLT (M20X2.5X70-MM)
32	8T-4189	14	BOLT (M8X1.25X20-MM)
33	8T-4195	24	BOLT (M10X1.5X30-MM)
34	9X-7719	1	SEAL-LIP TYPE
35	1U-8846	AR	SEALANT-GASKET

[A] PART OF 152-5242 TRANSMISSION AR

01119596
PR: t05i29k58b0183

155-9571 CLUTCH GP-INPUT
S/N: 9YY1-1465

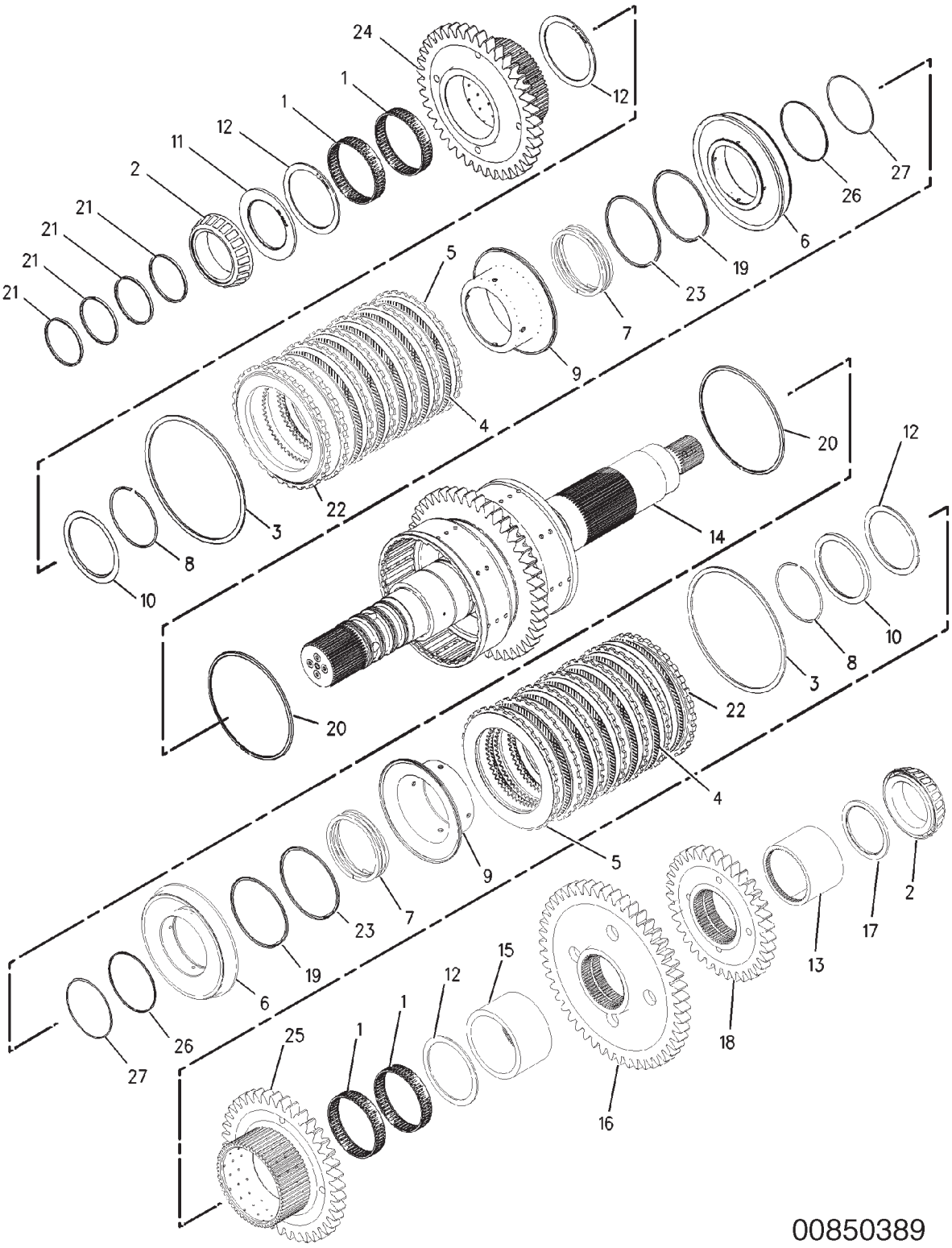

155-9571 CLUTCH GP-INPUT
S/N: 9YY1-1465

ITEM	NUMBER	QTY	DESCRIPTION
-	155-9571	--	CLUTCH GP-INPUT [A] (NOT SERVICED)
1	177-5236	4	BEARING
2	6V-0347	2	CONE-BEARING
3	4D-7889	2	RING
4	134-8360	12	DISC-FRICTION
5	134-8361	12	PLATE-CLUTCH
6	203-2631	2	PISTON
7	173-5392	2	SPRING
8	177-5241	2	RING-RETAINING
9	177-5243	2	SEAL AS
10	177-5246	2	RING-SPACER
11	177-5248	1	SPACER (86.25X126X5MM THK)
12	177-5249	4	DISC-THRUST
13	177-5250	1	SPACER
14	177-5252	1	SHAFT AS (45 TEETH)
15	177-5256	1	SPACER
16	177-5257	1	GEAR (50 TEETH)
17	177-5258	1	SPACER (86.3X106X5MM THK)
18	177-5260	1	GEAR (35 TEETH)
19	200-3039	2	RING-SEAL (EXTERNAL)
20	177-6797	2	RING-SEAL (EXTERNAL)
21	177-6801	4	RING-SEAL
22	177-6804	2	PLATE-END
23	199-9240	2	SEAL-O-RING
24	191-0426	1	GEAR (35 TEETH)
25	191-0427	1	GEAR (40 TEETH)
26	7T-5594	2	RING-SEAL
27	8T-2572	2	SEAL-O-RING

[A] PART OF 152-5242 TRANSMISSION AR

00850389
PR: t05i29k58b0184

155-9572 CLUTCH GP-INTERMEDIATE SHAFT

S/N: 9YY1-1465

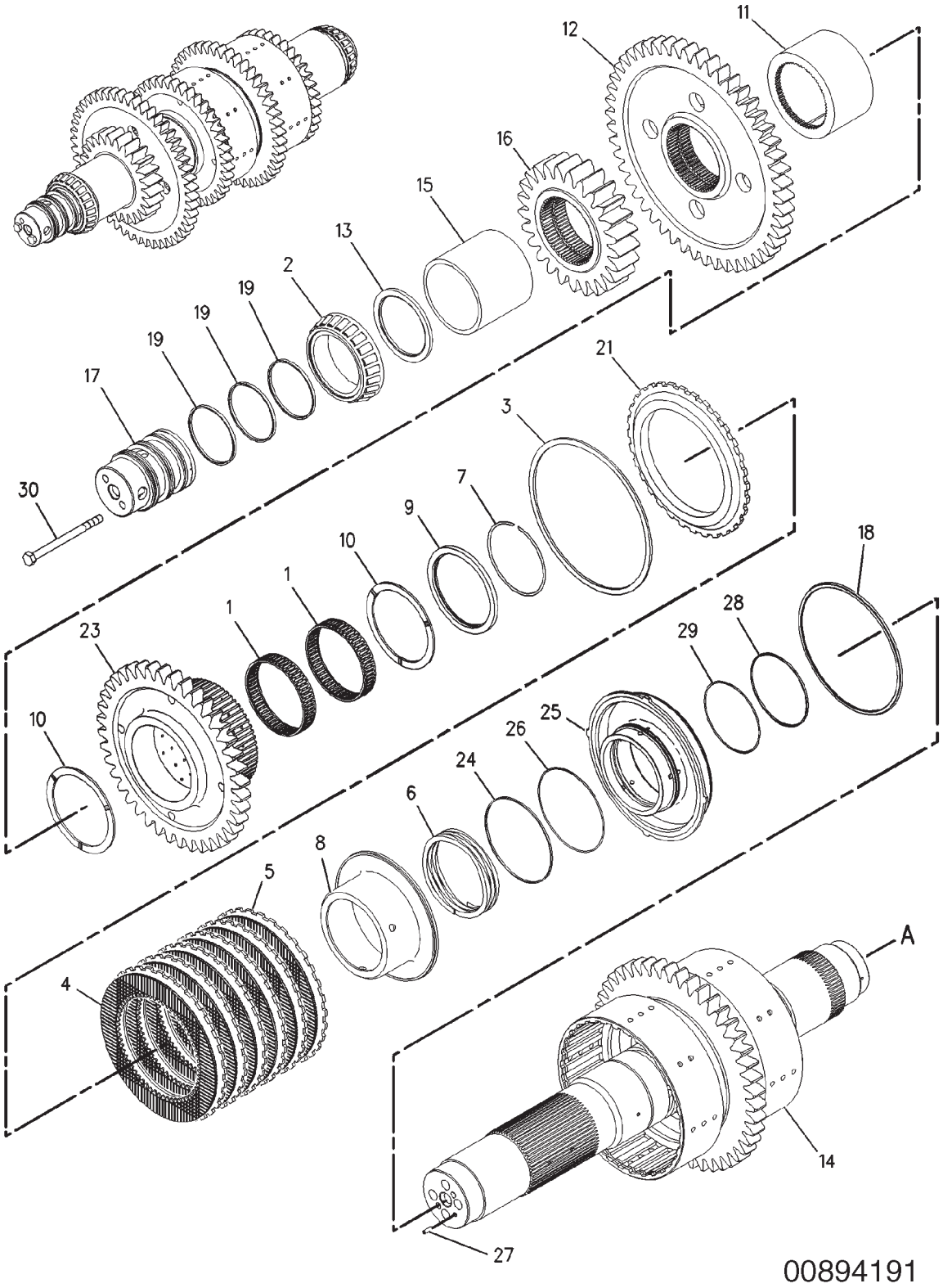

155-9572 CLUTCH GP-INTERMEDIATE SHAFT

S/N: 9YY1-1465

ITEM	NUMBER	QTY	DESCRIPTION
-	155-9572	--	CLUTCH GP-INTERMEDIATE SHAFT [A] (NOT SERVICED)
1	177-5236	2	BEARING
2	6V-0347	1	CONE-BEARING
3	4D-7889	1	RING
4	134-8360	6	DISC-FRICTION
5	134-8361	6	PLATE-CLUTCH
6	173-5392	1	SPRING
7	177-5241	1	RING-RETAINING
8	177-5243	1	SEAL AS
9	177-5246	1	RING-SPACER
10	177-5249	2	DISC-THRUST
11	177-5256	1	SPACER
12	177-5257	1	GEAR (50-TEETH)
13	177-5258	1	SPACER (86.3X106X5-MM THK)
14	240-5529	1	SHAFT AS
15	177-5263	1	SPACER
16	177-5265	1	GEAR (25-TEETH)
17	177-5267	1	CARRIER-SEAL
18	177-6797	1	RING-SEAL
19	177-6801	3	RING-SEAL
21	177-6804	1	PLATE-END
23	191-0427	1	GEAR (40-TEETH)
24	200-3039	1	RING-SEAL
25	203-2631	1	PISTON
26	199-9240	1	SEAL-O-RING
27	5H-8985	1	PIN-SPRING
28	7T-5594	1	RING-SEAL
29	8T-2572	1	SEAL-O-RING
30	8T-5436	2	BOLT (M10X1.5X130-MM)

[A] PART OF 152-5242 TRANSMISSION AR

00894191
PR: t05i29k58b0185

155-9572 CLUTCH GP-INTERMEDIATE SHAFT

S/N: 9YY1-1465

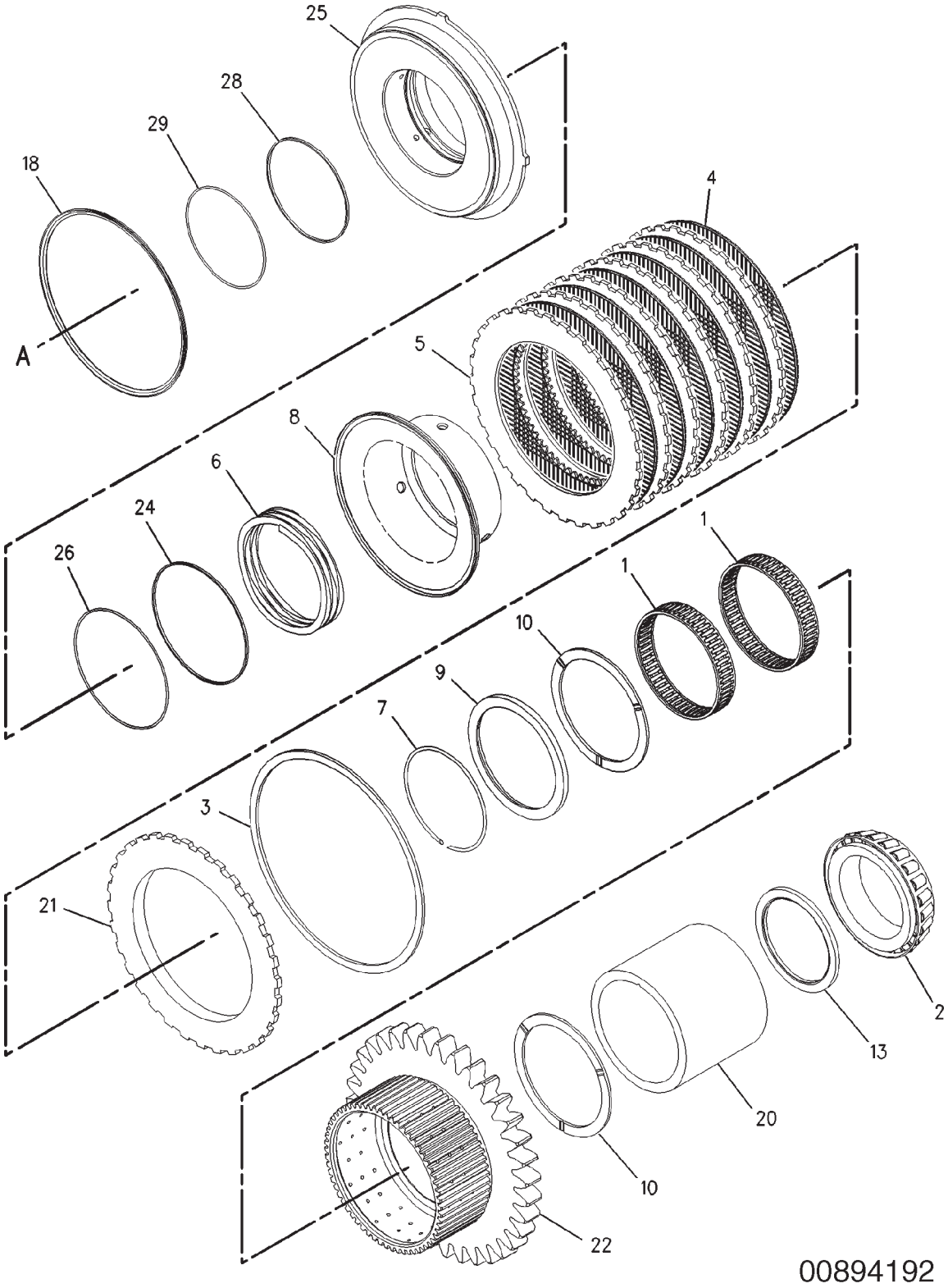

155-9572 CLUTCH GP-INTERMEDIATE SHAFT

S/N: 9YY1-1465

ITEM	NUMBER	QTY	DESCRIPTION
-	155-9572	--	CLUTCH GP-INTERMEDIATE SHAFT [A] (NOT SERVICED)
1	177-5236	2	BEARING
2	6V-0347	1	CONE-BEARING
3	4D-7889	1	RING
4	134-8360	6	DISC-FRICTION
5	134-8361	6	PLATE-CLUTCH
6	173-5392	1	SPRING
7	177-5241	1	RING-RETAINING
8	177-5243	1	SEAL AS
9	177-5246	1	RING-SPACER
10	177-5249	2	DISC-THRUST
13	177-5258	1	SPACER (86.3X106X5-MM THK)
18	177-6797	1	RING-SEAL
20	177-6802	1	SPACER
21	177-6804	1	PLATE-END
22	191-0426	1	GEAR (35-TEETH)
24	200-3039	1	RING-SEAL
25	203-2631	1	PISTON
26	199-9240	1	SEAL-O-RING
28	7T-5594	1	RING-SEAL
29	8T-2572	1	SEAL-O-RING

[A] PART OF 152-5242 TRANSMISSION AR

00894192
PR: t05i29k58b0186

155-9575 CLUTCH GP-REVERSE
S/N: 9YY1-UP

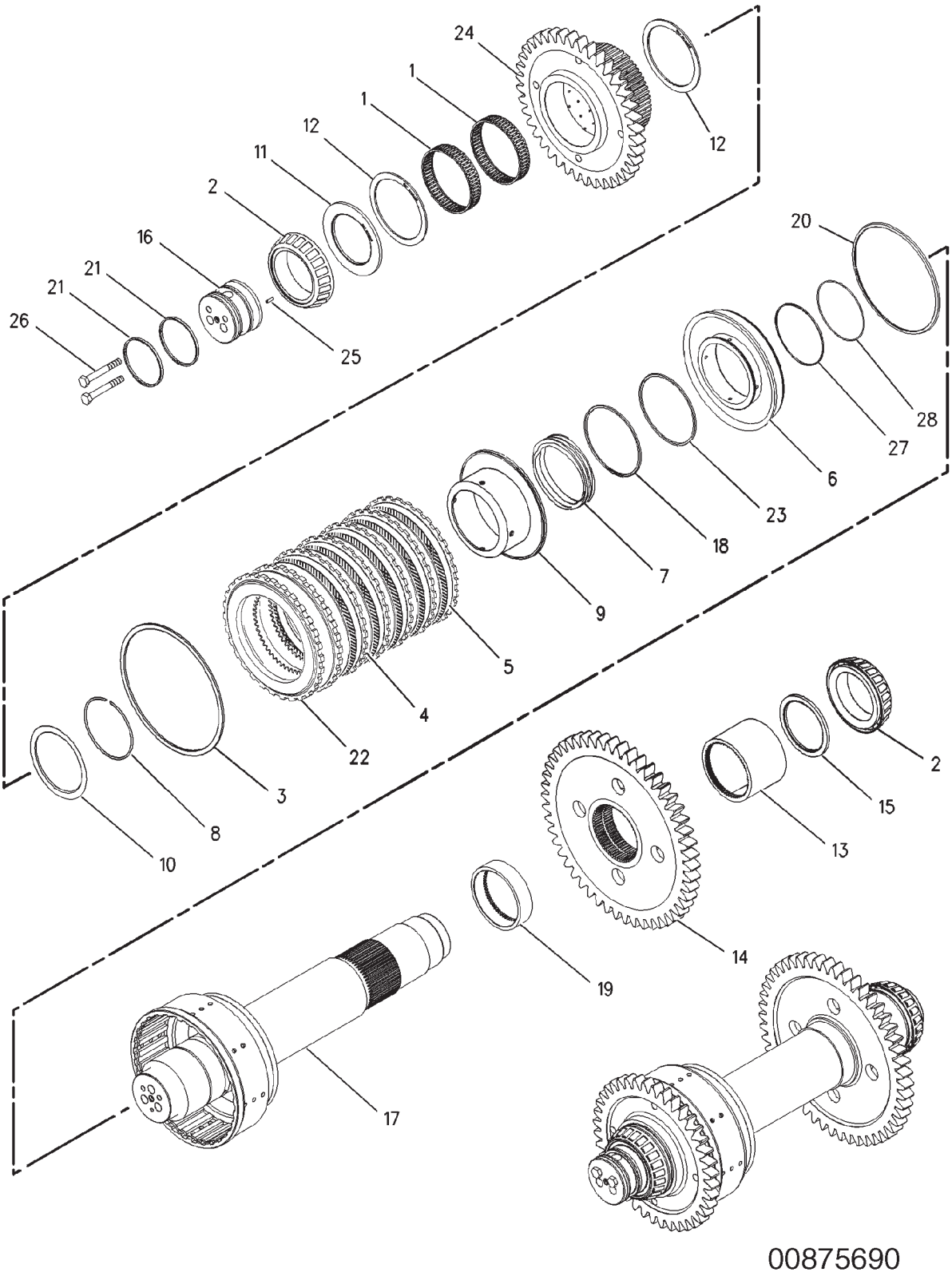

155-9575 CLUTCH GP-REVERSE

S/N: 9YY1-UP

ITEM	NUMBER	QTY	DESCRIPTION
-	155-9575	--	CLUTCH GP-REVERSE [A] (NOT SERVICED)
1	177-5236	2	BEARING
2	6V-0347	2	CONE-BEARING
3	4D-7889	1	RING
4	134-8360	6	DISC-FRICTION
5	134-8361	6	PLATE-CLUTCH
6	203-2631	1	PISTON
7	173-5392	1	SPRING
8	177-5241	1	RING-RETAINING
9	177-5243	1	SEAL AS
10	177-5246	1	RING-SPACER
11	177-5248	1	SPACER
12	177-5249	2	DISC-THRUST
13	177-5250	1	SPACER
14	177-5257	1	GEAR (50 TEETH)
15	177-5258	1	SPACER (86.3X106X5MM THK)
16	177-5269	1	CARRIER-SEAL
17	177-5270	1	SHAFT AS
18	200-3039	1	RING-SEAL
19	177-6770	1	SPACER
20	177-6797	1	RING-SEAL (EXTERNAL)
21	177-6801	2	RING-SEAL
22	177-6804	1	PLATE-END
23	199-9240	1	SEAL-O-RING
24	191-0427	1	GEAR (40 TEETH)
25	5H-8985	1	PIN-SPRING
26	6V-5815	2	BOLT (M10X1.5X75MM)
27	7T-5594	1	RING-SEAL
28	8T-2572	1	SEAL-O-RING

[A] PART OF 152-5242 TRANSMISSION AR

00875690
PR: t05i29k58b0187

155-9576 CLUTCH GP-OUTPUT SHAFT

S/N: 9YY1-UP

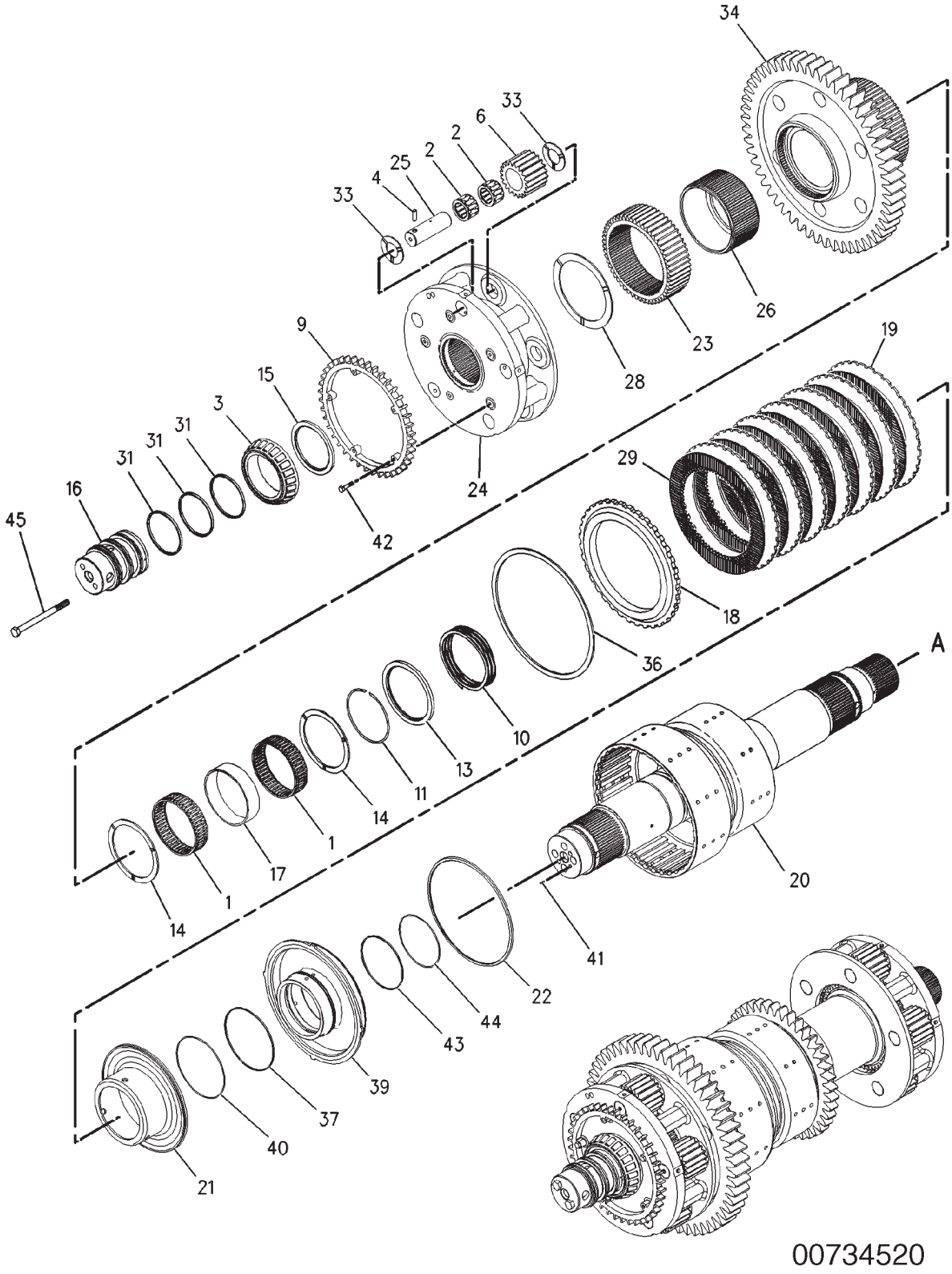

155-9576 CLUTCH GP-OUTPUT SHAFT

S/N: 9YY1-UP

ITEM	NUMBER	QTY	DESCRIPTION
-	155-9576	--	CLUTCH GP-OUTPUT SHAFT [A] (NOT SERVICED)
1	177-6738	2	BEARING
2	187-6226	10	BEARING-SPECIAL
3	6V-0347	1	CONE-BEARING
4	3S-2708	5	PIN-SPRING
6	7G-2510	5	GEAR-PLANETARY (20 TEETH)
9	165-0420	1	ROTOR AS
10	173-5392	1	SPRING
11	177-5241	1	RING-RETAINING
13	177-5246	1	RING-SPACER
14	177-5249	2	DISC-THRUST
15	177-5258	1	SPACER (86.3X106X5MM THK)
16	177-5267	1	CARRIER-SEAL
17	177-6739	1	SPACER
18	177-6740	1	PLATE-END
19	177-6743	7	PLATE-CLUTCH
20	177-6747	1	SHAFT AS
	9P-2343	1	PLUG-ORIFICE
21	177-6752	1	SEAL AS
22	177-6754	1	RING-SEAL
23	177-6755	1	GEAR-SUN (53 TEETH)
24	177-6757	1	CARRIER-PLANETARY
25	177-6758	5	SHAFT AS
26	177-6760	1	SHAFT-DRIVE (LH)
28	177-6771	1	DISC-THRUST
29	177-6795	7	DISC-FRICTION
31	177-6801	3	RING-SEAL
33	187-8947	10	DISC-THRUST
34	191-0428	1	GEAR (54 TEETH)
36	192-4975	1	RING-RETAINING
37	200-3039	1	RING-SEAL
39	203-2632	1	PISTON
40	199-9240	1	SEAL-O-RING
41	5H-8985	1	PIN-SPRING
42	6V-8490	3	BOLT (M6X1X25MM)
43	7T-5594	1	RING-SEAL
44	8T-2572	1	SEAL-O-RING
45	8T-5436	2	BOLT (M10X1.50X130MM)

[A] PART OF 152-5242 TRANSMISSION AR

00734520
PR: t05i29k58b0188

155-9576 CLUTCH GP-OUTPUT SHAFT

S/N: 9YY1-UP

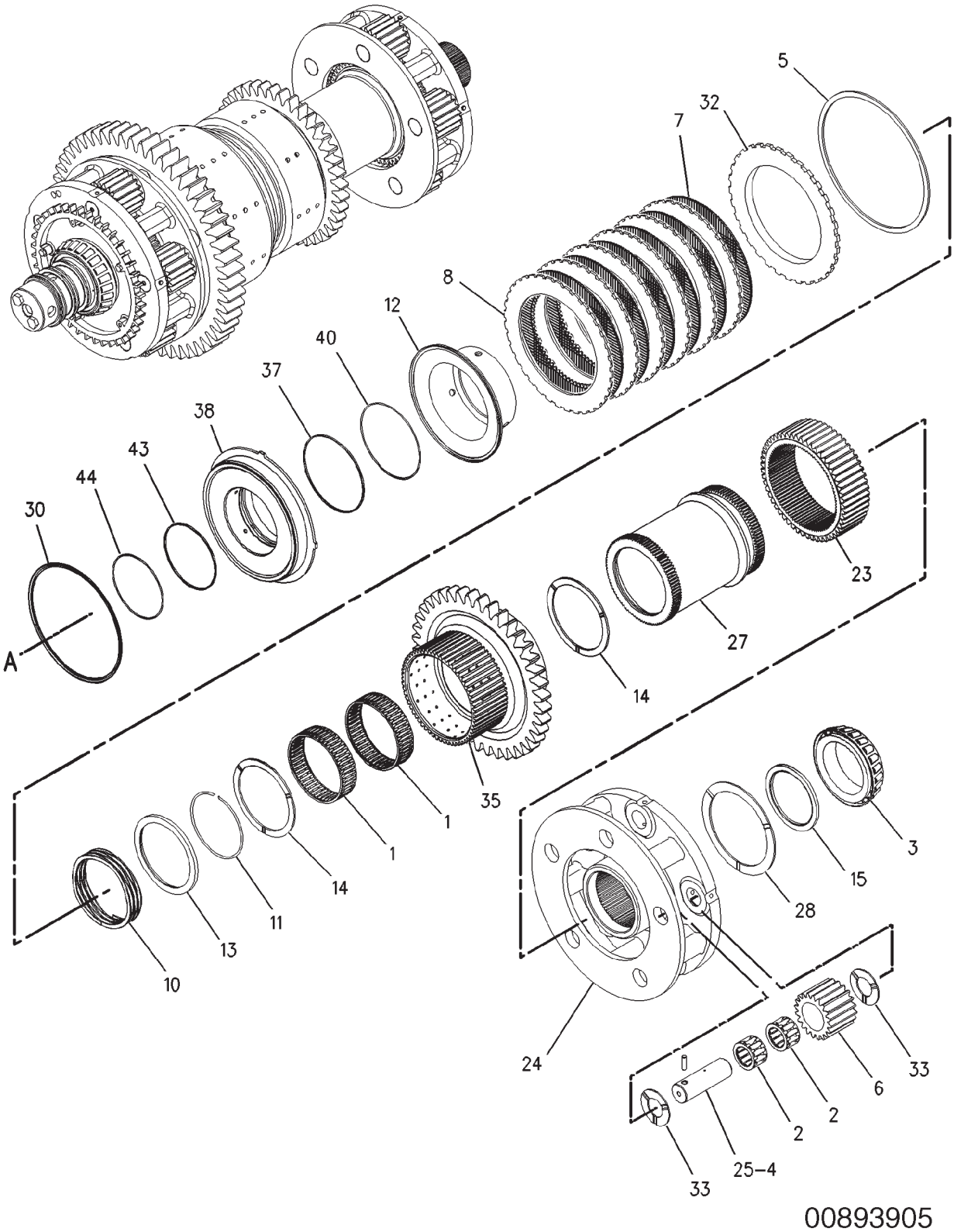

155-9576 CLUTCH GP-OUTPUT SHAFT

S/N: 9YY1-UP

ITEM	NUMBER	QTY	DESCRIPTION
-	155-9576	--	CLUTCH GP-OUTPUT SHAFT [A] (NOT SERVICED)
1	177-6738	2	BEARING
2	187-6226	10	BEARING-SPECIAL
3	6V-0347	1	CONE-BEARING
4	3S-2708	5	PIN-SPRING
5	4D-7889	1	RING
6	7G-2510	5	GEAR-PLANETARY (20 TEETH)
7	134-8360	6	DISC-FRICTION
8	134-8361	6	PLATE-CLUTCH
10	173-5392	1	SPRING
11	177-5241	1	RING-RETAINING
12	177-5243	1	SEAL AS
13	177-5246	1	RING-SPACER
14	177-5249	2	DISC-THRUST
15	177-5258	1	SPACER (86.3X106X5MM THK)
23	177-6755	1	GEAR-SUN (53 TEETH)
24	177-6757	1	CARRIER-PLANETARY
25	177-6758	5	SHAFT AS
27	177-6769	1	SHAFT-DRIVE (RH)
28	177-6771	1	DISC-THRUST
30	177-6797	1	RING-SEAL
32	177-6804	1	PLATE-END
33	187-8947	10	DISC-THRUST
35	191-0429	1	GEAR (40 TEETH)
37	200-3039	1	RING-SEAL
38	203-2631	1	PISTON
40	199-9240	1	SEAL-O-RING
43	7T-5594	1	RING-SEAL
44	8T-2572	1	SEAL-O-RING

[A] PART OF 152-5242 TRANSMISSION AR

00893905
PR: t05i29k58b0189

177-5233 CLUTCH GP-PLANETARY
S/N: 9YY1-UP

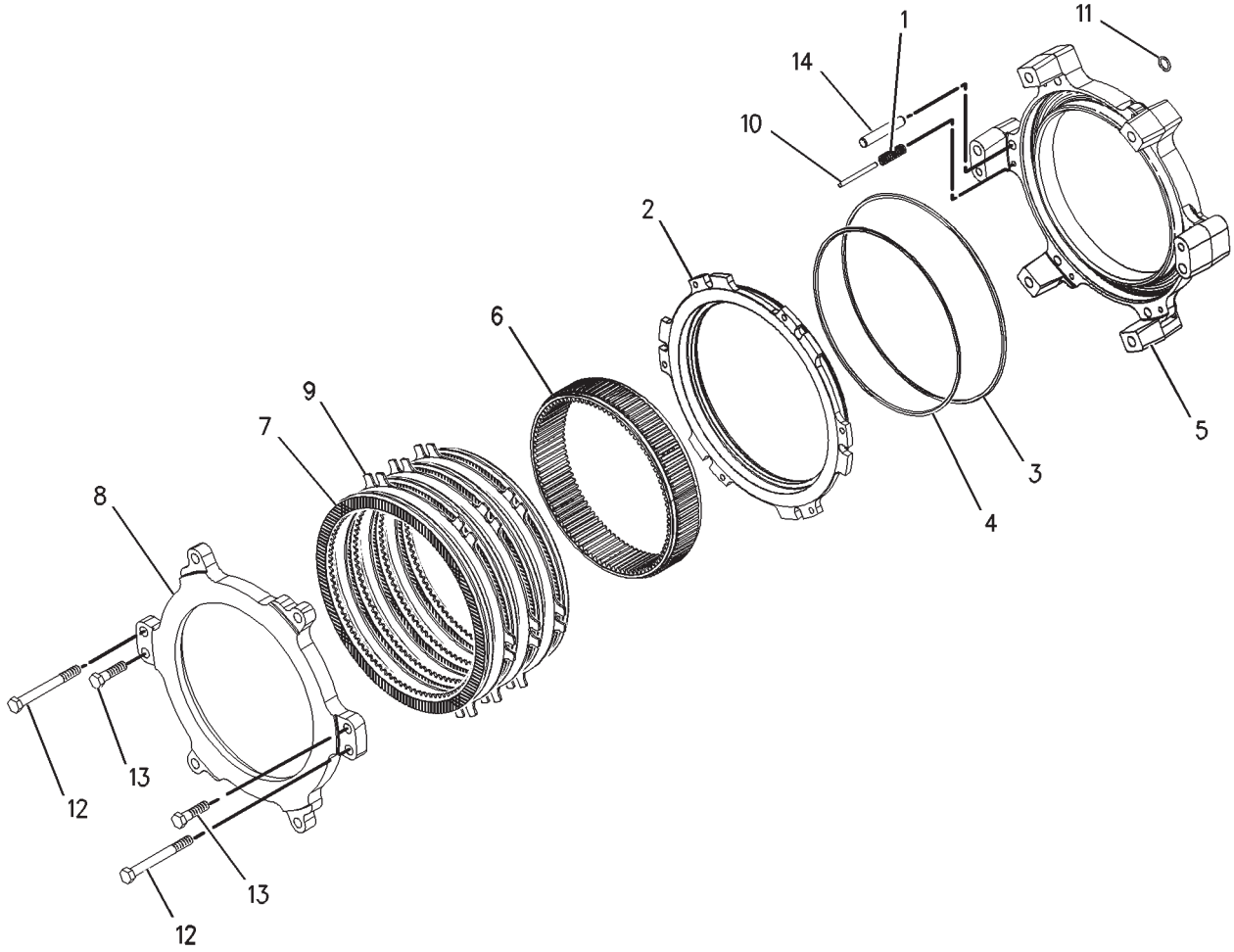

00734552

177-5233 CLUTCH GP-PLANETARY

S/N: 9YY1-UP

ITEM	NUMBER	QTY	DESCRIPTION
-	177-5233	--	CLUTCH GP-PLANETARY [A] (NOT SERVICED)
1	7G-6945	6	SPRING
2	177-6761	1	PISTON
3	177-6762	1	RING-SEAL (EXTERNAL)
4	177-6763	1	RING-SEAL (INTERNAL)
5	177-6764	1	HOUSING-CLUTCH
6	177-6765	1	GEAR-RING (92 TEETH)
7	177-6766	4	DISC-FRICTION
8	177-6767	1	PLATE-END
9	177-6768	3	PLATE-CLUTCH
10	4T-2201	6	ROD
11	8F-3469	2	SEAL-O-RING
12	8T-0646	6	BOLT (M12X1.75X110MM)
13	6V-5684	2	BOLT (M12X1.75X45MM)
14	9H-5545	6	DOWEL-REACTION

[A] PART OF 152-5242 TRANSMISSION AR

00734552
PR: t05i29k58b0190

232-1774 CLUTCH GP-TRANSMISSION

REVERSE SHAFT CLUTCH GROUP
S/N: 9YY1466-UP

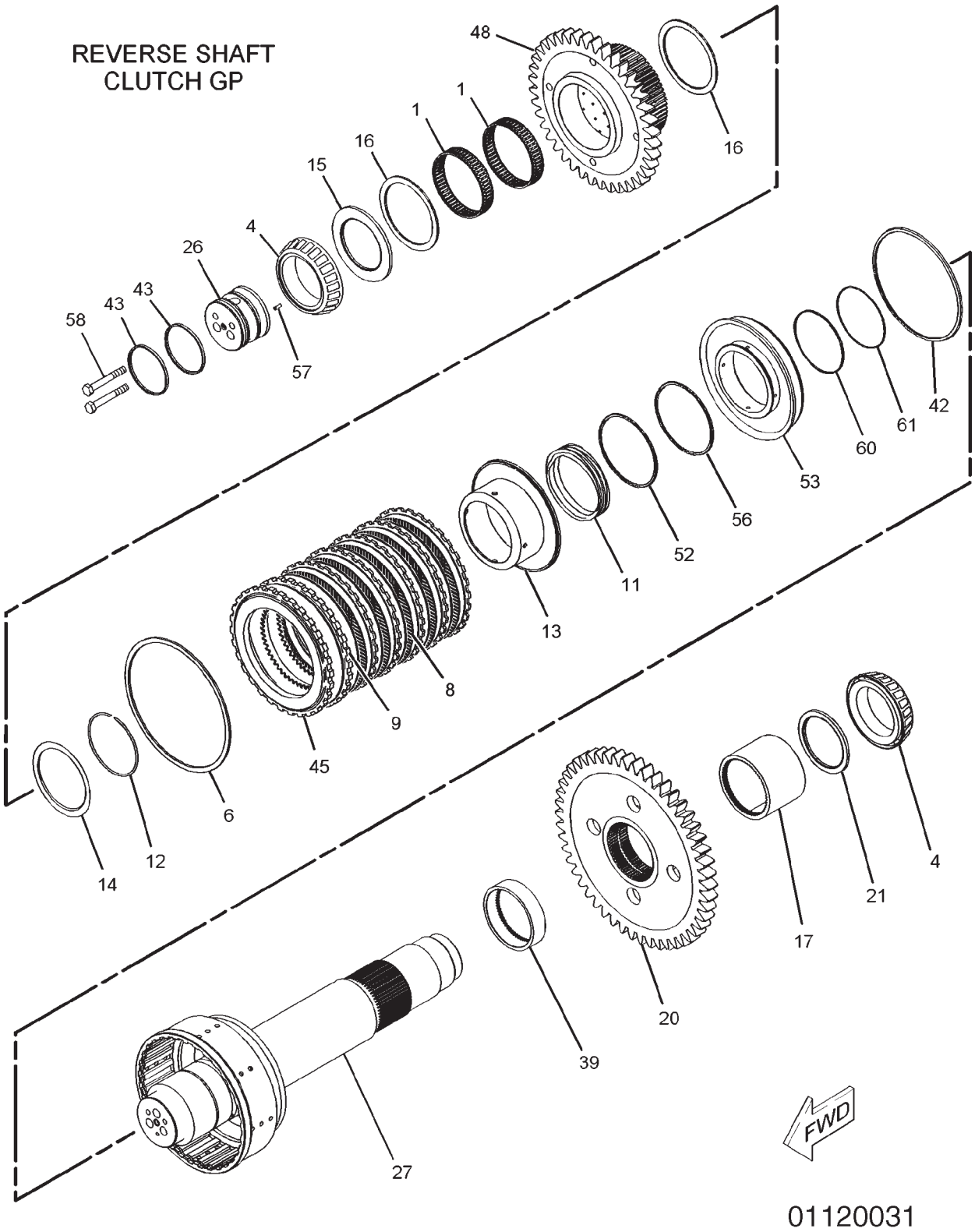

232-1774 CLUTCH GP-TRANSMISSION

REVERSE SHAFT CLUTCH GROUP
S/N: 9YY1466-UP

ITEM	NUMBER	QTY	DESCRIPTION
-	232-1774	--	CLUTCH GP-TRANSMISSION [A] (NOT SERVICED)
1	177-5236	2	BEARING
4	6V-0347	2	CONE-BEARING
6	4D-7889	1	RING
8	134-8360	6	DISC-FRICTION
9	134-8361	6	PLATE-CLUTCH
11	173-5392	1	SPRING
12	177-5241	1	RING-RETAINING
13	177-5243	1	SEAL AS
14	177-5246	1	RING-SPACER
15	177-5248	1	SPACER
16	177-5249	2	DISC-THRUST
17	177-5250	1	SPACER
20	177-5257	1	GEAR (50-TEETH)
21	177-5258	1	SPACER (86.3X106X5-MM THK)
26	177-5269	1	CARRIER-SEAL
27	177-5270	1	SHAFT AS
39	177-6770	1	SPACER
42	177-6797	1	RING-SEAL
43	177-6801	2	RING-SEAL
45	177-6804	1	PLATE-END
48	191-0427	1	GEAR (40-TEETH)
52	200-3039	1	RING-SEAL
53	203-2631	1	PISTON
56	199-9240	1	SEAL-O-RING
57	5H-8985	1	PIN-SPRING
58	6V-5815	2	BOLT (M10X1.5X75-MM)
60	7T-5594	1	RING-SEAL
61	8T-2572	1	SEAL-O-RING

[A] PART OF 152-5242 TRANSMISSION AR

01120031
PR: t05i29k58b0191

232-1774 CLUTCH GP-TRANSMISSION

INPUT SHAFT CLUTCH GROUP
S/N: 9YY1466-UP

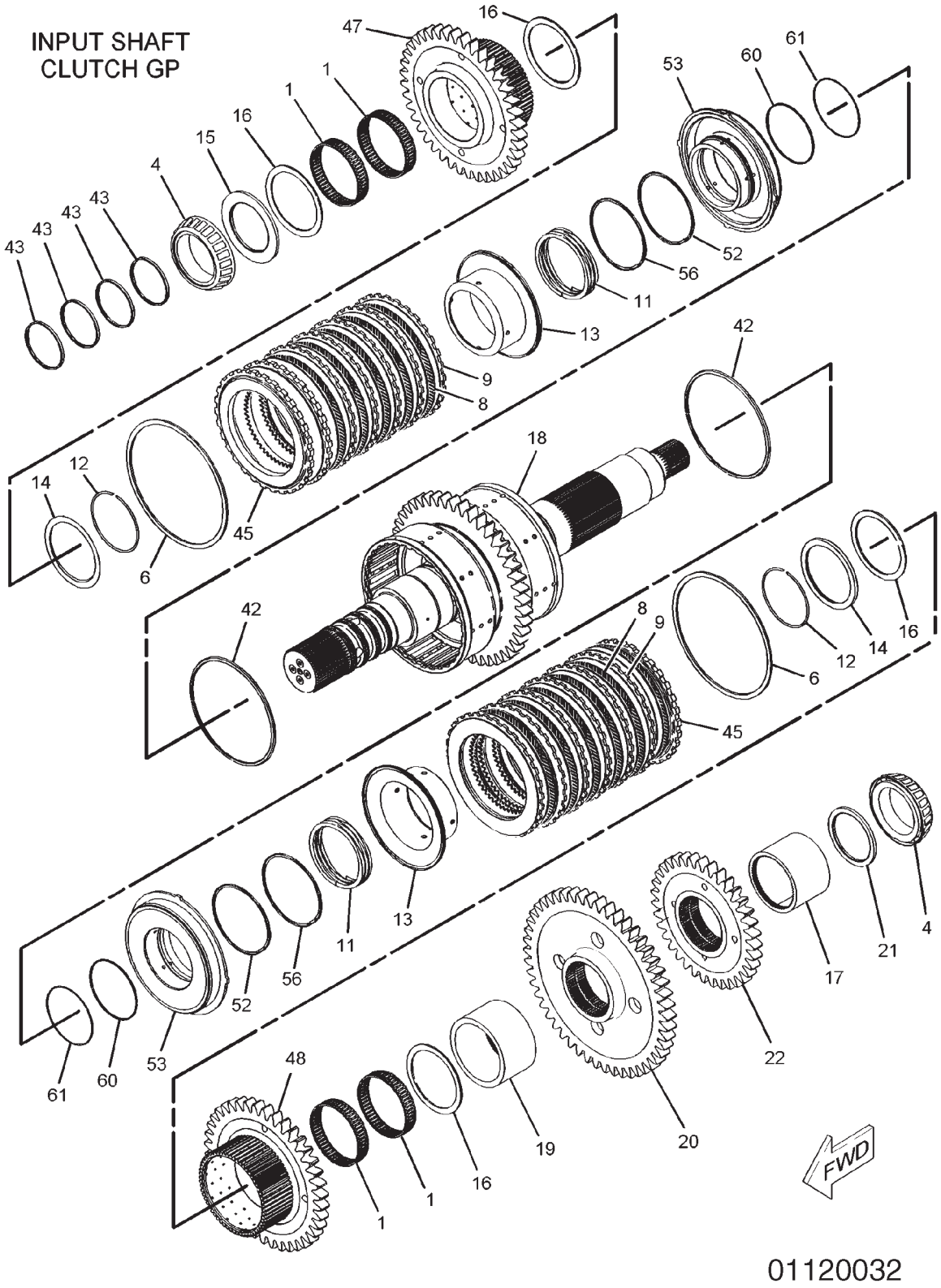

232-1774 CLUTCH GP-TRANSMISSION

INPUT SHAFT CLUTCH GROUP
S/N: 9YY1466-UP

ITEM	NUMBER	QTY	DESCRIPTION
-	232-1774	--	CLUTCH GP-TRANSMISSION [A] (NOT SERVICED)
1	177-5236	4	BEARING
4	6V-0347	2	CONE-BEARING
6	4D-7889	2	RING
8	134-8360	12	DISC-FRICTION
9	134-8361	12	PLATE-CLUTCH
11	173-5392	2	SPRING
12	177-5241	2	RING-RETAINING
13	177-5243	2	SEAL AS
14	177-5246	2	RING-SPACER
15	177-5248	1	SPACER
16	177-5249	4	DISC-THRUST
17	177-5250	1	SPACER
18	177-5252	1	SHAFT AS
	165-0400	4	PLUG
19	177-5256	1	SPACER
20	177-5257	1	GEAR (50-TEETH)
21	177-5258	1	SPACER (86.3X106X5-MM THK)
22	177-5260	1	GEAR (35-TEETH)
42	177-6797	2	RING-SEAL
43	177-6801	4	RING-SEAL
45	177-6804	2	PLATE-END
47	191-0426	1	GEAR (35-TEETH)
48	191-0427	1	GEAR (40-TEETH)
52	200-3039	2	RING-SEAL
53	203-2631	2	PISTON
56	199-9240	1	SEAL-O-RING
60	7T-5594	2	RING-SEAL
61	8T-2572	2	SEAL-O-RING

[A] PART OF 152-5242 TRANSMISSION AR

01120032
PR: t05i29k58b0192

232-1774 CLUTCH GP-TRANSMISSION

INTERMEDIATE SHAFT CLUTCH GROUP (1 OF 2)
S/N: 9YY1466-UP

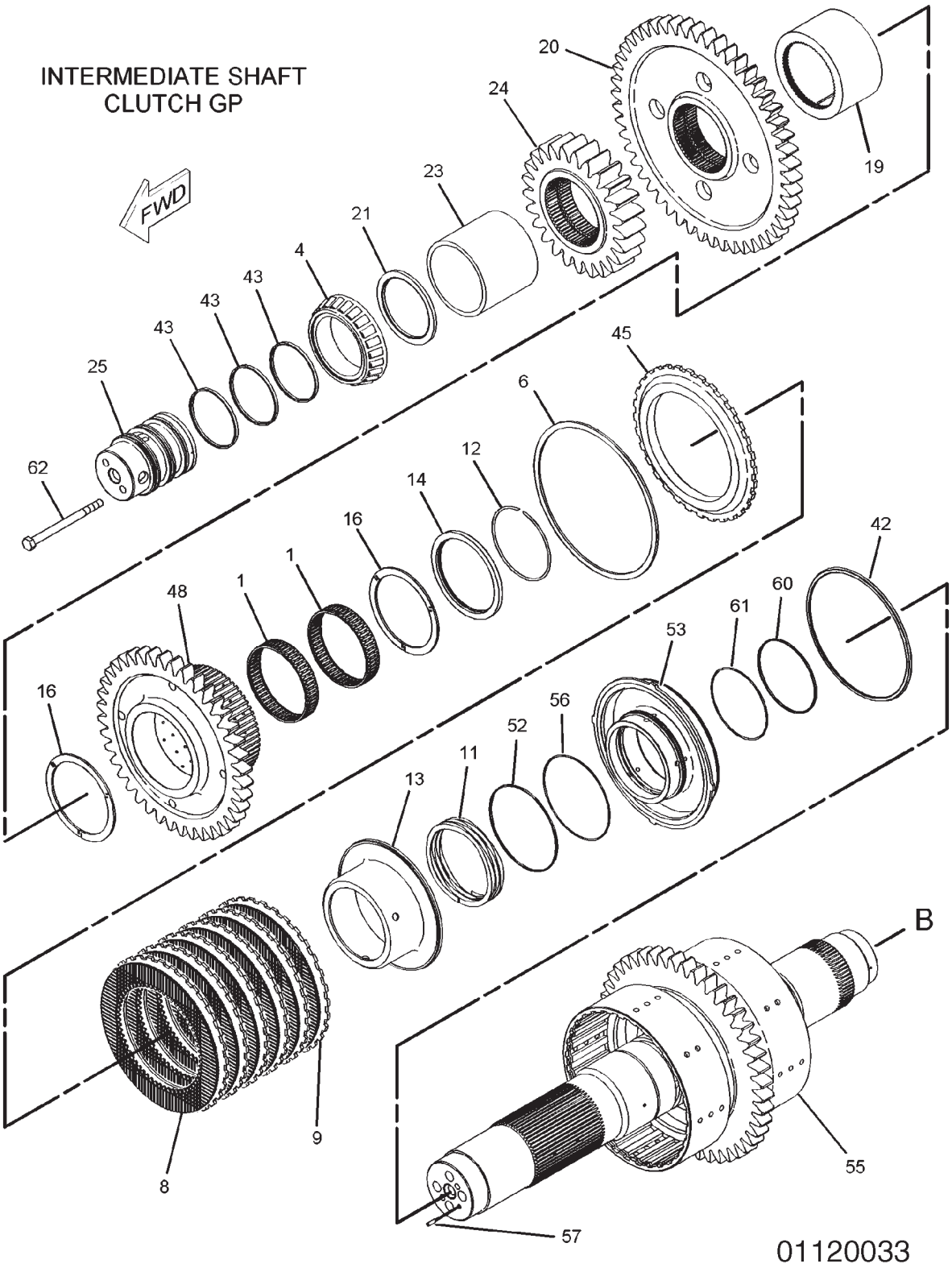

232-1774 CLUTCH GP-TRANSMISSION

INTERMEDIATE SHAFT CLUTCH GROUP (1 OF 2)
S/N: 9YY1466-UP

ITEM	NUMBER	QTY	DESCRIPTION
-	232-1774	--	CLUTCH GP-TRANSMISSION [A] (NOT SERVICED)
1	177-5236	2	BEARING
4	6V-0347	1	CONE-BEARING
6	4D-7889	1	RING
8	134-8360	6	DISC-FRICTION
9	134-8361	6	PLATE-CLUTCH
11	173-5392	1	SPRING
12	177-5241	1	RING-RETAINING
13	177-5243	1	SEAL AS
14	177-5246	1	RING-SPACER
16	177-5249	2	DISC-THRUST
19	177-5256	1	SPACER
20	177-5257	1	GEAR (50-TEETH)
21	177-5258	1	SPACER (86.3X106X5-MM THK)
23	177-5263	1	SPACER
24	177-5265	1	GEAR (25-TEETH)
25	177-5267	1	CARRIER-SEAL
42	177-6797	1	RING-SEAL
43	177-6801	3	RING-SEAL
45	177-6804	1	PLATE-END
48	191-0427	1	GEAR (40-TEETH)
52	200-3039	1	RING-SEAL
53	203-2631	1	PISTON
55	240-5529	1	SHAFT AS
56	199-9240	1	SEAL-O-RING
57	5H-8985	1	PIN-SPRING
60	7T-5594	1	RING-SEAL
61	8T-2572	1	SEAL-O-RING
62	8T-5436	1	BOLT (M10X1.5X130-MM)

[A] PART OF 152-5242 TRANSMISSION AR

01120033
PR: t05i29k58b0193

232-1774 CLUTCH GP-TRANSMISSION

INTERMEDIATE SHAFT CLUTCH GROUP (2 OF 2)
S/N: 9YY1466-UP

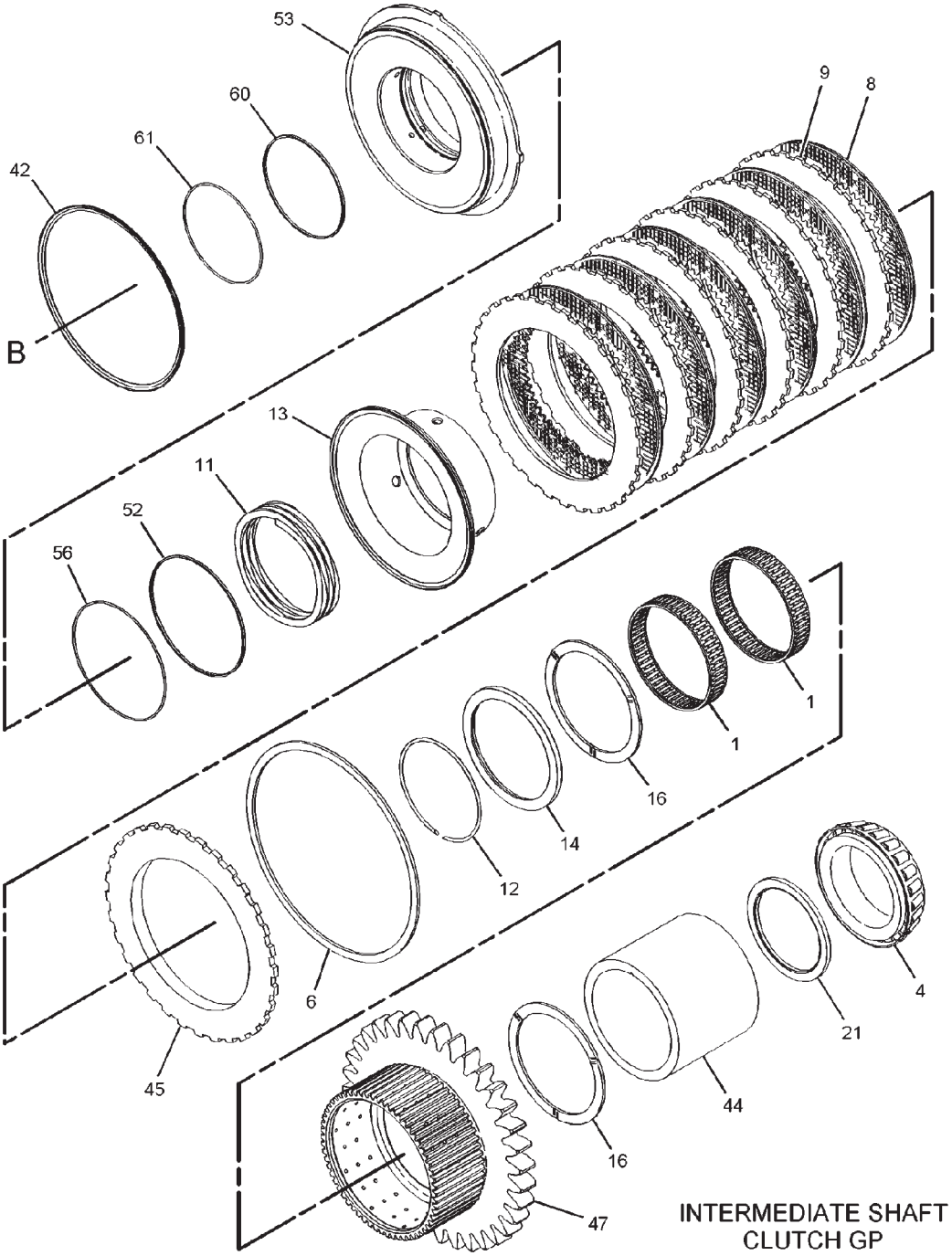

01120035

232-1774 CLUTCH GP-TRANSMISSION

INTERMEDIATE SHAFT CLUTCH GROUP (2 OF 2)
S/N: 9YY1466-UP

ITEM	NUMBER	QTY	DESCRIPTION
-	232-1774	--	CLUTCH GP-TRANSMISSION [A] (NOT SERVICED)
1	177-5236	2	BEARING
4	6V-0347	1	CONE-BEARING
6	4D-7889	1	RING
8	134-8360	6	DISC-FRICTION
9	134-8361	6	PLATE-CLUTCH
11	173-5392	1	SPRING
12	177-5241	1	RING-RETAINING
13	177-5243	1	SEAL AS
14	177-5246	1	RING-SPACER
16	177-5249	2	DISC-THRUST
21	177-5258	1	SPACER (86.3X106X5-MM THK)
42	177-6797	1	RING-SEAL
44	177-6802	1	SPACER
45	177-6804	1	PLATE-END
47	191-0426	1	GEAR (35-TEETH)
52	200-3039	1	RING-SEAL
53	203-2631	1	PISTON
56	199-9240	1	SEAL-O-RING
60	7T-5594	1	RING-SEAL
61	8T-2572	1	SEAL-O-RING

[A] PART OF 152-5242 TRANSMISSION AR

01120035
PR: t05i29k58b0194

232-1774 CLUTCH GP-TRANSMISSION

OUTPUT SHAFT CLUTCH GROUP (1 OF 2)
S/N: 9YY1466-UP

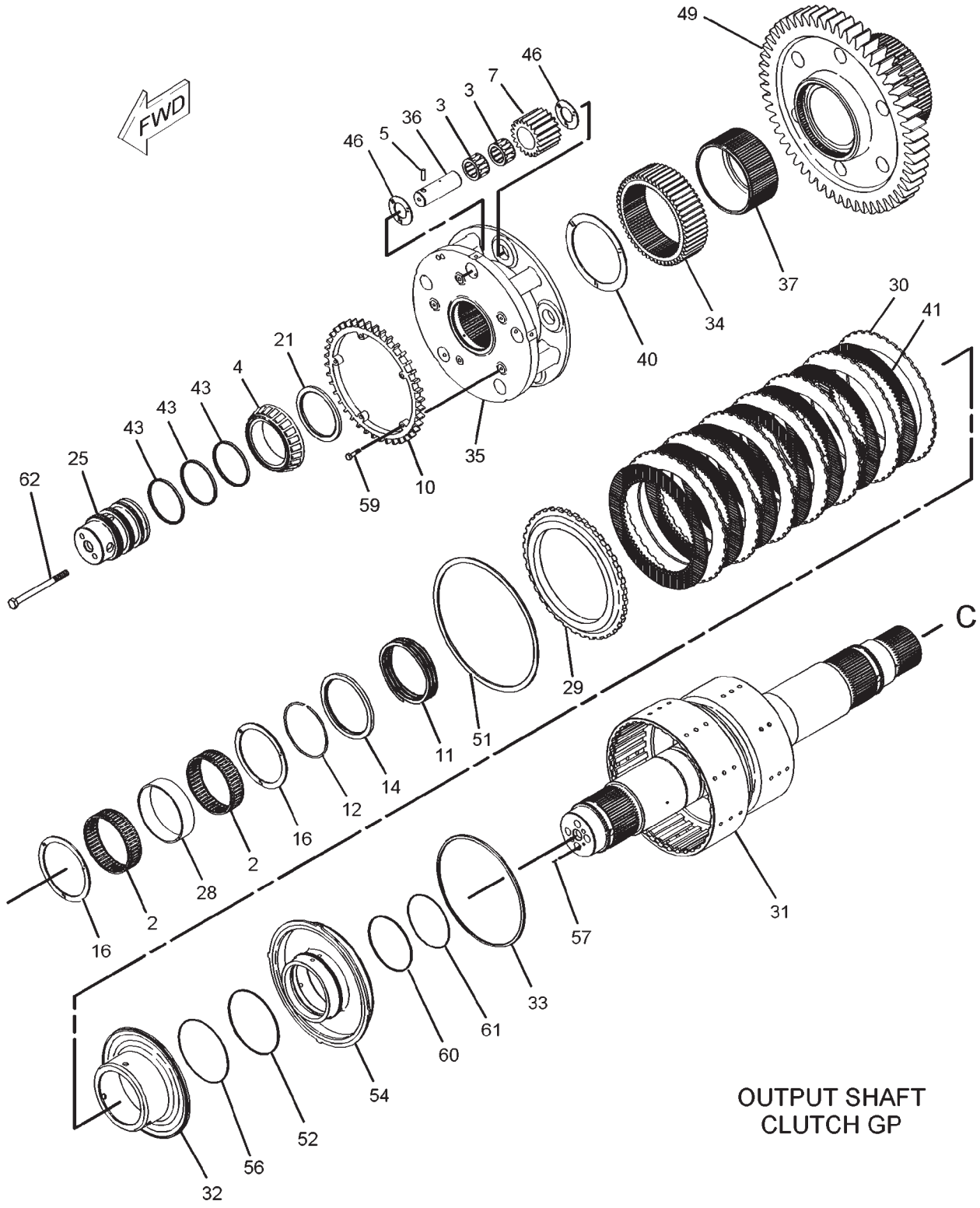

232-1774 CLUTCH GP-TRANSMISSION

OUTPUT SHAFT CLUTCH GROUP (1 OF 2)
S/N: 9YY1466-UP

ITEM	NUMBER	QTY	DESCRIPTION
-	232-1774	--	CLUTCH GP-TRANSMISSION [A] (NOT SERVICED)
2	177-6738	2	BEARING
3	187-6226	2	BEARING-SPECIAL
4	6V-0347	1	CONE-BEARING
5	3S-2708	1	PIN-SPRING
7	7G-2510	1	GEAR-PLANETARY (20-TEETH)
10	165-0420	1	ROTOR AS
	3H-0703	2	DOWEL
11	173-5392	1	SPRING
12	177-5241	1	RING-RETAINING
14	177-5246	1	RING-SPACER
16	177-5249	2	DISC-THRUST
21	177-5258	1	SPACER (86.3X106X5-MM THK)
25	177-5267	1	CARRIER-SEAL
28	177-6739	1	SPACER
29	177-6740	1	PLATE-END
30	177-6743	1	PLATE-CLUTCH
31	177-6747	1	SHAFT AS
	9P-2343	1	PLUG-ORIFICE
32	177-6752	1	SEAL AS
33	177-6754	1	RING-SEAL
34	177-6755	1	GEAR-SUN (53-TEETH)
35	177-6757	1	CARRIER-PLANETARY
36	177-6758	1	SHAFT AS
	8S-0527	1	PLUG-CUP
37	177-6760	1	SHAFT-DRIVE (LH)
40	177-6771	1	DISC-THRUST
41	177-6795	1	DISC-FRICTION
43	177-6801	3	RING-SEAL
46	187-8947	2	DISC-THRUST
49	191-0428	1	GEAR (54-TEETH)
51	192-4975	1	RING-RETAINING
52	200-3039	1	RING-SEAL
54	203-2632	1	PISTON
56	199-9240	1	SEAL-O-RING
57	5H-8985	1	PIN-SPRING
59	6V-8490	1	BOLT (M6X1X25-MM)
60	7T-5594	1	RING-SEAL
61	8T-2572	1	SEAL-O-RING
62	8T-5436	1	BOLT (M10X1.5X130-MM)

[A] PART OF 152-5242 TRANSMISSION AR

232-1774 CLUTCH GP-TRANSMISSION

OUTPUT SHAFT CLUTCH GROUP (2 OF 2)
S/N: 9YY1466-UP

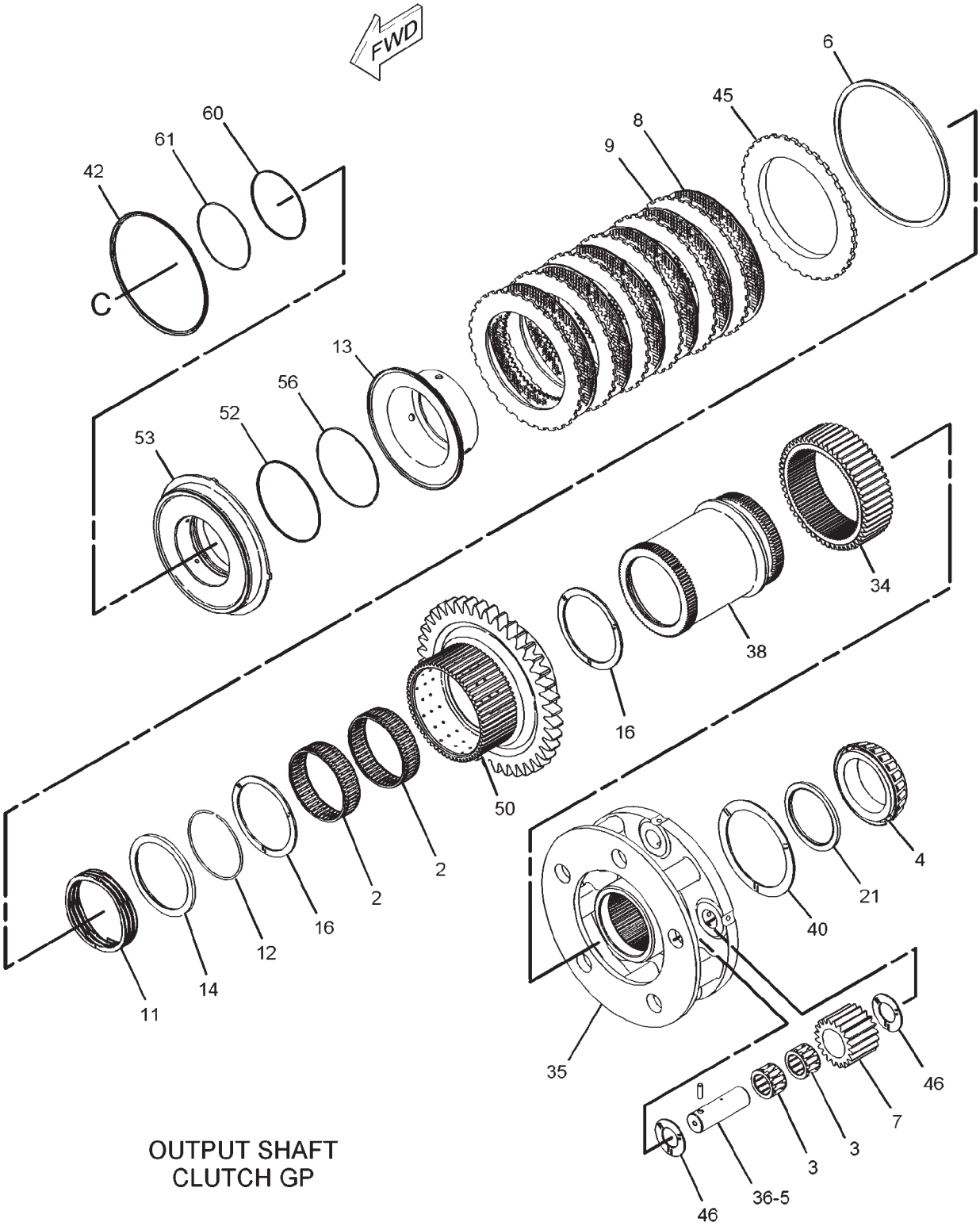

01120038

232-1774 CLUTCH GP-TRANSMISSION

OUTPUT SHAFT CLUTCH GROUP (2 OF 2)
S/N: 9YY1466-UP

ITEM	NUMBER	QTY	DESCRIPTION
-	232-1774	--	CLUTCH GP-TRANSMISSION [A] (NOT SERVICED)
2	177-6738	2	BEARING
3	187-6226	2	BEARING-SPECIAL
4	6V-0347	1	CONE-BEARING
5	3S-2708	1	PIN-SPRING
6	4D-7889	1	RING
7	7G-2510	1	GEAR-PLANETARY (20-TEETH)
8	134-8360	6	DISC-FRICTION
9	134-8361	6	PLATE-CLUTCH
11	173-5392	1	SPRING
12	177-5241	1	RING-RETAINING
13	177-5243	1	SEAL AS
14	177-5246	1	RING-SPACER
16	177-5249	2	DISC-THRUST
21	177-5258	1	SPACER (86.3X106X5-MM THK)
34	177-6755	1	GEAR-SUN (53-TEETH)
35	177-6757	1	CARRIER-PLANETARY
36	177-6758	1	SHAFT AS
	8S-0527	1	PLUG-CUP
38	177-6769	1	SHAFT-DRIVE (RH)
40	177-6771	1	DISC-THRUST
42	177-6797	1	RING-SEAL
45	177-6804	1	PLATE-END
46	187-8947	2	DISC-THRUST
50	191-0429	1	GEAR (40-TEETH)
52	200-3039	1	RING-SEAL
53	203-2631	1	PISTON
56	199-9240	1	SEAL-O-RING
60	7T-5594	1	RING-SEAL
61	8T-2572	1	SEAL-O-RING

[A] PART OF 152-5242 TRANSMISSION AR

01120038
PR: t05i29k58b0196

155-9580 CONTROL GP-TRANSMISSION HYD

S/N: 9YY1-UP

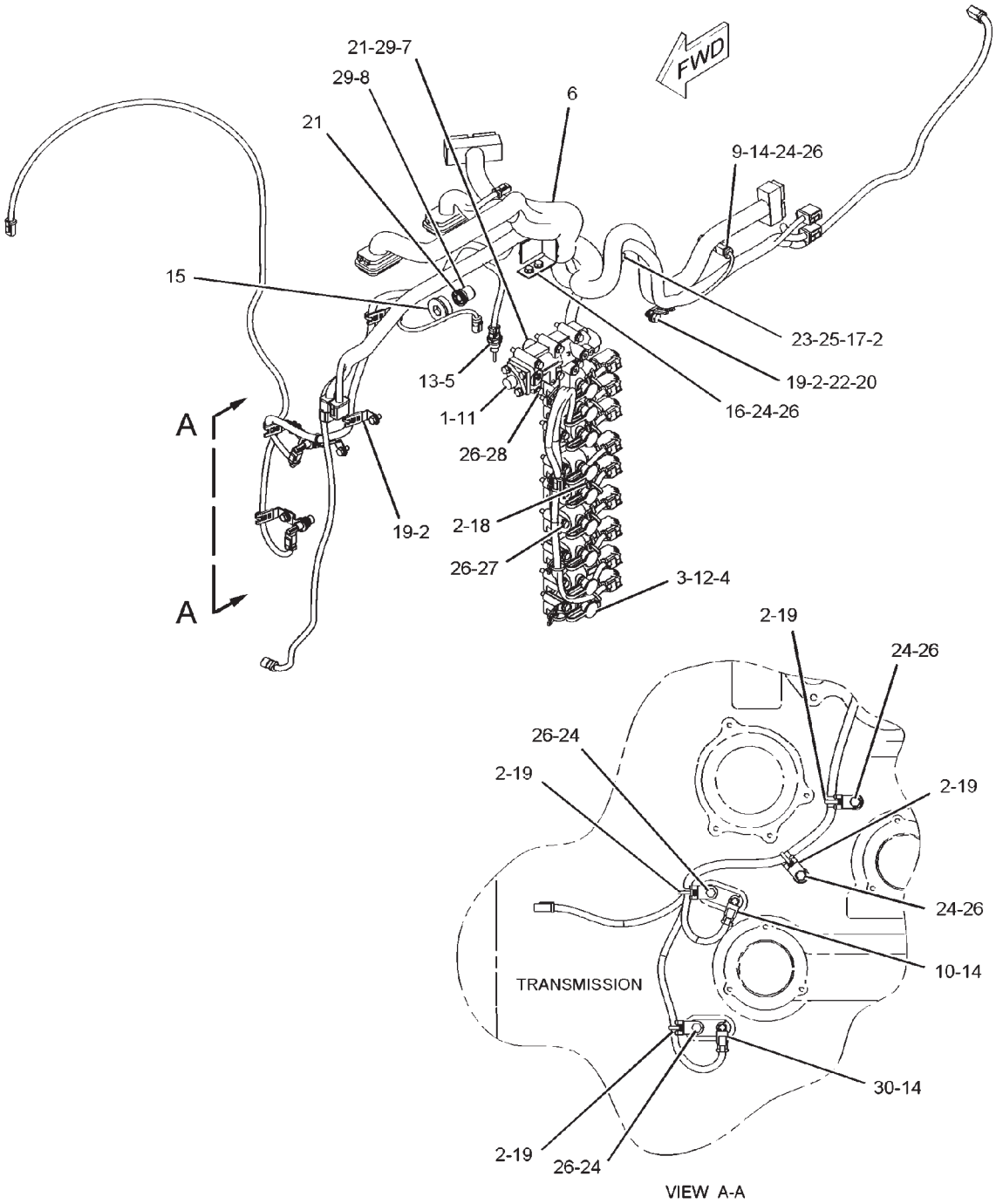

01120531

155-9580 CONTROL GP-TRANSMISSION HYD

S/N: 9YY1-UP

ITEM	NUMBER	QTY	DESCRIPTION
-	155-9580	--	CONTROL GP-TRANSMISSION HYD [A]
			(NOT SERVICED)
1	2P-1692	1	SEAL-O-RING
2	3S-2093	18	STRAP-CABLE
3	6V-0852	9	CAP-DUST
4	8S-0768	9	SEAL-O-RING
5	130-9811	1	SENSOR GP-TEMPERATURE (HYDRAULIC OIL)
6	228-4278	1	HARNESS AS-TRANSMISSION
7	148-1925	1	VALVE-RELIEF (COOLER BYPASS)
8	165-0390	1	VALVE-RELIEF (TRANSMISSION-LUBE)
9	191-8303	1	SENSOR GP-SPEED (TRANSMISSION-INPUT)
10	191-8304	1	SENSOR GP-SPEED (TRANSMISSION-OUTPUT #1)
11	198-1013	1	VALVE GP-RELIEF
			(HYDRAULIC CONTROL SYSTEM)
			(SEE BREAKDOWN FOR COMPONENTS)
12	216-5343	9	VALVE GP-MODULATING (ELEK CLUTCH
			PRESS CONT)
			(SEE BREAKDOWN FOR COMPONENTS)
13	112-5282	1	SEAL-O-RING
14	117-1385	3	SEAL-O-RING
15	9S-3902	1	PLUG AS
	9S-8010	1	PLUG
	183-2317	1	SEAL-O-RING
16	211-1170	1	BRACKET AS
	7T-1099	2	LINK
17	4P-7428	1	CLIP
18	4P-7581	11	CLIP
19	4P-8134	6	CLIP
20	6V-5839	1	WASHER (11X21X2.5-MM THK)
21	8C-3428	2	RING-RETAINING
22	8T-4137	1	BOLT (M10X1.5X20-MM)
23	8T-4179	1	BOLT (M12X1.75X20-MM)
24	8T-4200	7	BOLT (M8X1.25X16-MM)
25	8T-4223	1	WASHER-HARD (13.5X25.5X3-MM THK)
26	8T-4224	31	WASHER-HARD (8.8X16X2-MM THK)
27	8T-6869	22	BOLT (M8X1.25X60-MM)
28	8T-6870	2	BOLT (M8X1.25X70-MM)
29	9X-4609	2	SEAL-O-RING
30	191-8304	1	SENSOR GP-SPEED TRANSMISSION-OUTPUT #2

[A] PART OF 152-5242 TRANSMISSION AR

01120531
PR: t05i29k58b0197

180-4376 DIFFERENTIAL GP-STEERING

**S/N: AZG1-906; AZH1-972;
AZJ1-1112; AZK1-968**

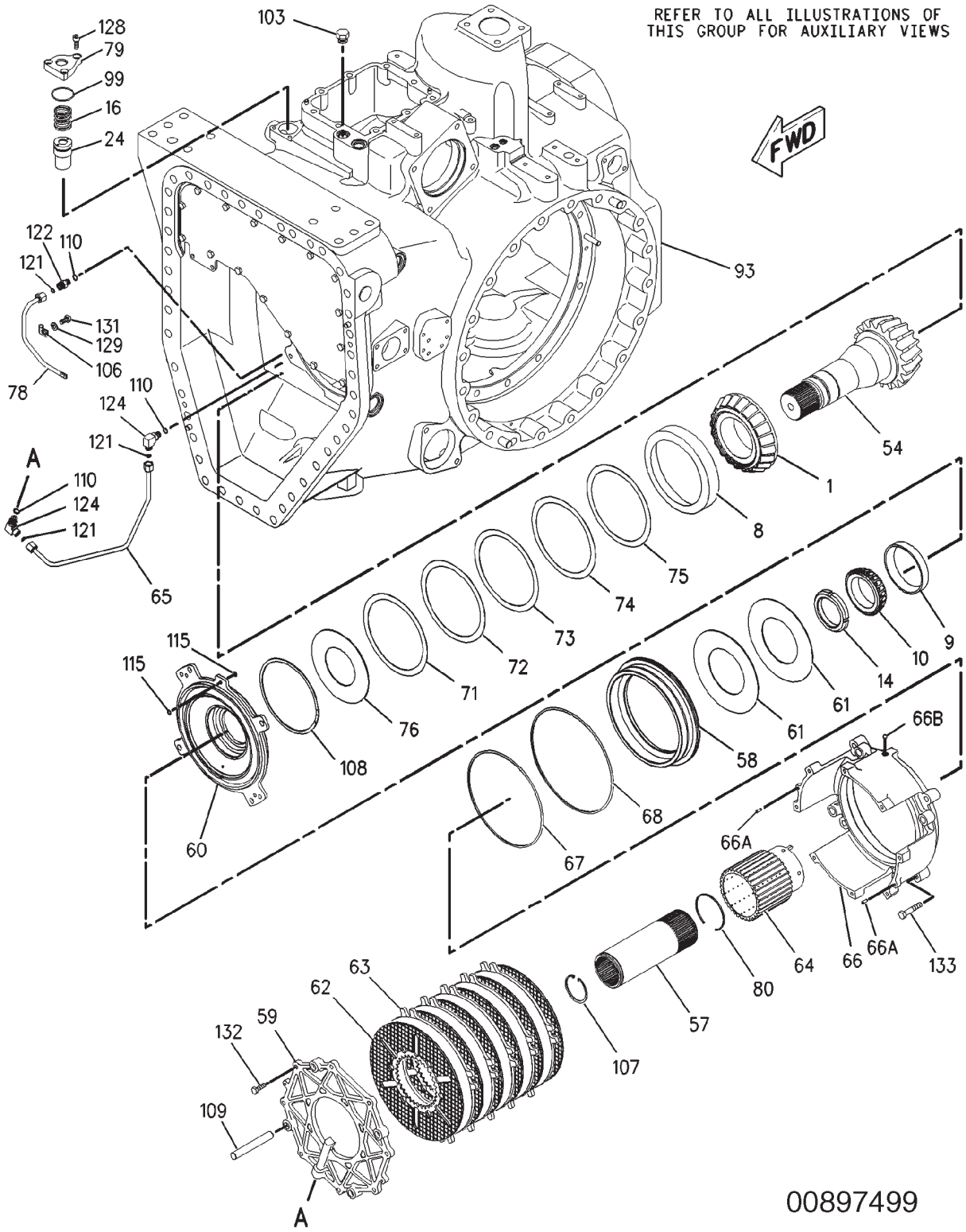

180-4376 DIFFERENTIAL GP-STEERING

S/N: AZG1-906; AZH1-972; AZJ1-1112; AZK1-968

ITEM	NUMBER	QTY	DESCRIPTION
-	180-4376	--	DIFFERENTIAL GP-STEERING [A] (NOT SERVICED)
1	124-9536	1	CONE-BEARING
8	5P-7843	1	CUP-BEARING
9	6F-2956	1	CUP-BEARING
10	6V-0347	1	CONE-BEARING
14	4H-6507	1	LOCKNUT
16	7H-0832	1	SPRING
24	163-0592	1	VALVE GP-CHECK (HYDRAULIC)
	061-7540	1	SEAL-O-RING
54	186-2868	1	PINION-BEVEL (17-TEETH)
57	187-1377	1	COUPLING
58	227-9327	1	PISTON
59	187-3367	1	PLATE-END
60	187-3368	1	PLATE-SPRING
61	187-3369	2	SPRING
62	187-3370	1	DISC-FRICTION
63	187-3371	6	PLATE-CLUTCH
64	187-3372	1	HUB-CLUTCH
65	187-3373	1	TUBE AS
66	187-3374	1	HOUSING AS
66A	2H-1190	2	DOWEL
66B	4B-9782	1	BALL
67	188-0632	1	SEAL-BRAKE
68	188-0633	1	SEAL-BRAKE
71	191-1907	AR	SHIM (0.9MM THK)
72	191-1908	AR	SHIM (0.8MM THK)
73	191-1909	AR	SHIM (0.7MM THK)
74	191-1910	AR	SHIM (0.6MM THK)
75	191-1911	AR	SHIM (0.5MM THK)
76	191-1912	1	PLATE-RETAINER
78	195-3252	1	TUBE AS
79	197-5411	1	FLANGE
80	198-0288	1	RING-RETAINING
93	225-6958	1	HOUSING GP-DIFFERENTIAL (NOT SERVICED) (SEE BREAKDOWN FOR COMPONENTS)
99	005-8593	1	SEAL-O-RING
103	9S-4190	1	PLUG
	2M-9780	1	SEAL-O-RING
106	1F-7567	1	CLIP
107	2H-5549	1	RING-RETAINING
108	2K-1381	1	RING-RETAINING
109	2Y-7489	4	DOWEL
110	3J-1907	3	SEAL-O-RING
115	5H-6005	2	SEAL-O-RING
121	6V-8397	3	SEAL-O-RING
122	6V-8636	1	CONNECTOR
124	6V-8724	2	ELBOW
128	8T-1159	3	BOLT-SOCKET HEAD (M10X1.5X25-MM)
129	8T-4121	1	WASHER-HARD (11X21X2.5-MM THK)
131	8T-4137	1	BOLT (M10X1.5X20-MM)
132	8T-4195	10	BOLT (M10X1.5X30-MM)
133	8T-4910	4	BOLT (M12X1.75X60-MM)

[A] 185-3955, 185-3956, 185-3957, 185-3958 AXLE AR

00897499
PR: t05i29k58b0198

180-4376 DIFFERENTIAL GP-STEERING

(PAGE 1 OF 2)
S/N: AZG1-906; AZH1-972;
AZJ1-1112; AZK1-968

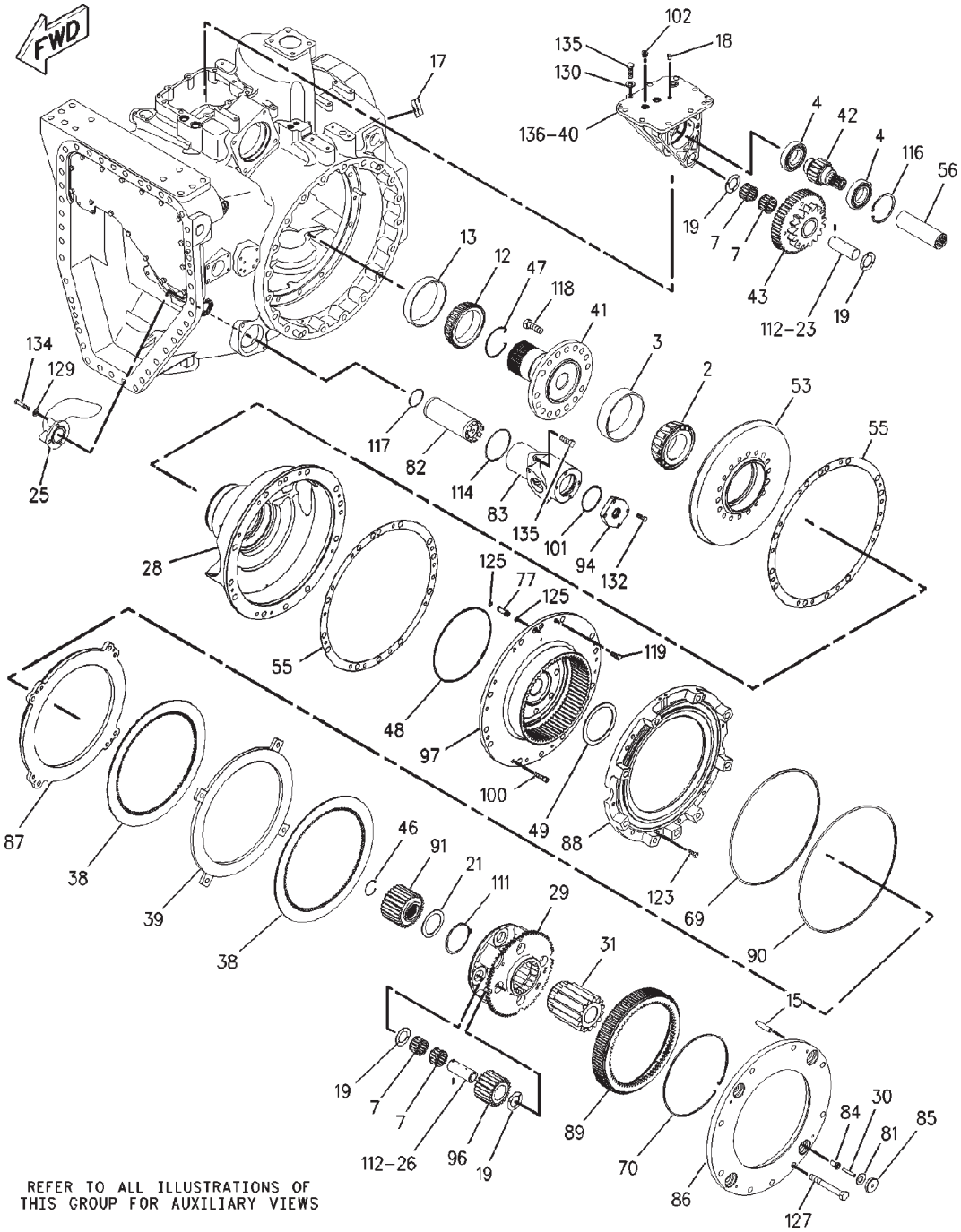

00897500

180-4376 DIFFERENTIAL GP-STEERING

(PAGE 1 OF 2)
S/N: AZG1-906; AZH1-972;
AZJ1-1112; AZK1-968

ITEM	NUMBER	QTY	DESCRIPTION
-	180-4376	--	DIFFERENTIAL GP-STEERING [A] (NOT SERVICED)
2	132-6597	1	CONE-BEARING
3	132-6598	1	CUP-BEARING
4	1F-2771	2	BALL BEARING
7	5P-6254	10	BEARING
12	8D-2256	1	CONE-BEARING
13	9K-1171	1	CUP-BEARING
15	4K-3892	4	DOWEL
17	7X-7816	1	PLATE-SERIAL NUMBER (TRANSMISSION)
	-----	2	TACK
18	8C-5224	3	PLUG-SEAL
19	8E-8310	9	DISC-THRUST
21	8E-8652	1	DISC-THRUST
23	111-7068	1	SHAFT AS
	2A-3746	1	PLUG-CUP
25	-----	1	TUBE
26	174-9381	4	SHAFT-PLANETARY
28	174-9407	1	SUPPORT
29	174-9410	1	CARRIER-PLANETARY
30	176-1377	4	PIN-SPRING
31	179-9006	1	GEAR-SUN (15-TEETH)
38	180-4502	2	DISC-FRICTION
39	180-4505	1	PLATE
40	180-8428	1	SUPPORT AS
	2A-3746	4	PLUG-CUP
41	183-3411	1	SHAFT-BEVEL GEAR
42	183-3413	1	GEAR (18-TEETH)
43	183-3414	1	GEAR (54-TEETH)
46	184-1693	1	RING-RETAINING
47	184-1694	1	RING-RETAINING
48	184-1695	1	SEAL-RING
49	184-1696	1	DISC-THRUST
53	186-2867	1	GEAR-BEVEL (48-TEETH)
55	186-2869	2	SHIM PACK (INCLUDES 14-SHIMS)
56	235-6166	1	COUPLING
69	188-0635	1	SEAL-BRAKE
70	189-2089	1	RING-LOCK
77	192-5602	2	SLEEVE
81	199-7107	4	SPRING
82	207-5993	1	SCREEN
83	207-7007	1	HOUSING
84	210-8405	4	BUSHING
85	210-8406	4	PLATE-SPRING
86	221-5334	1	PLATE-REACTION
87	211-8280	1	PISTON-BRAKE
88	242-5086	1	HOUSING AS
	126-7260	1	PLUG
89	213-3269	1	HUB-BRAKE

CONTINUED

[A] 185-3955, 185-3956,
185-3957, 185-3958 AXLE AR

180-4376 DIFFERENTIAL GP-STEERING

(PAGE 2 OF 2)
S/N: AZG1-906; AZH1-972;
AZJ1-1112; AZK1-968

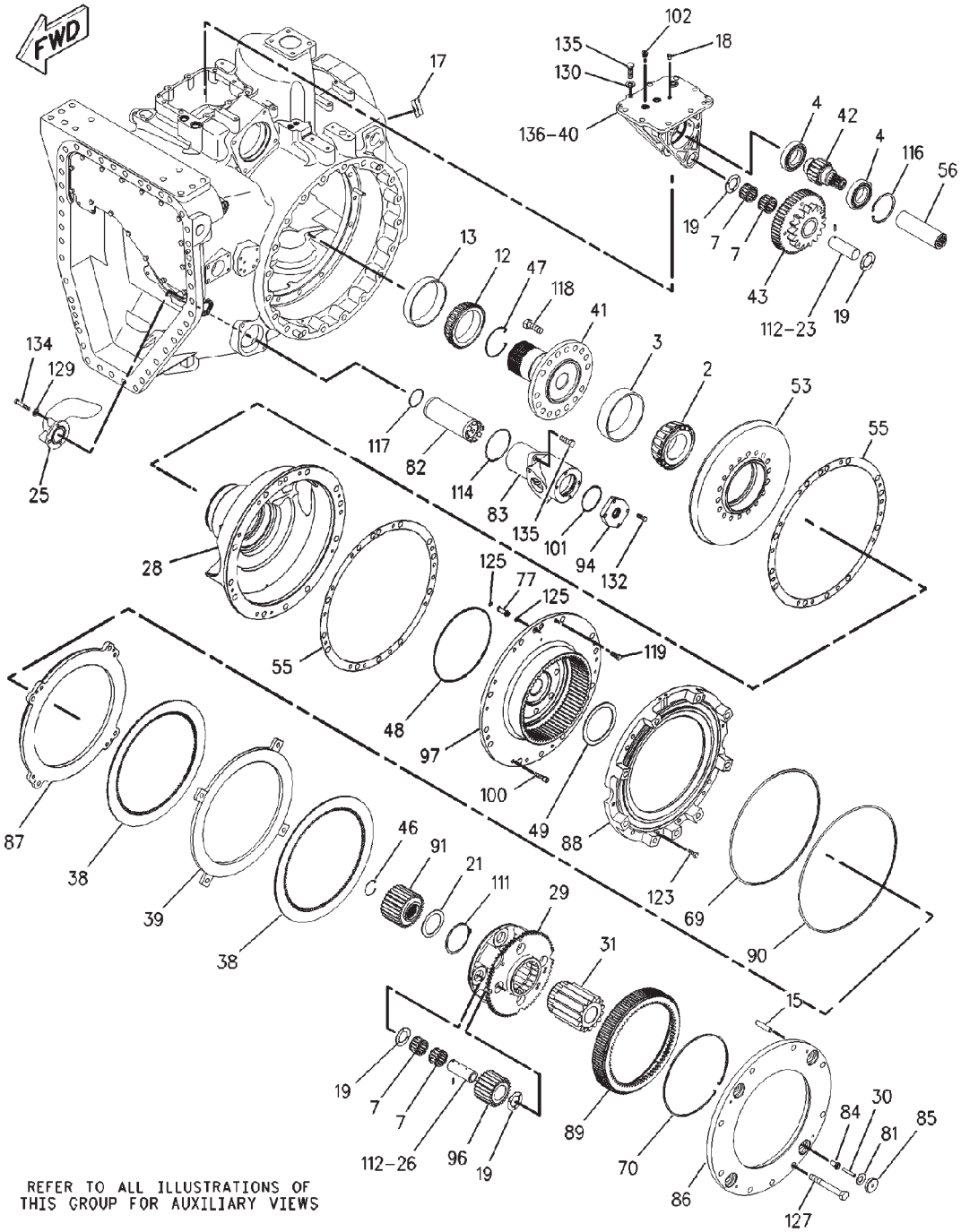

00897500

180-4376 DIFFERENTIAL GP-STEERING

(PAGE 2 OF 2)
S/N: AZG1-906; AZH1-972;
AZJ1-1112; AZK1-968

ITEM	NUMBER	QTY	DESCRIPTION
-	180-4376	--	DIFFERENTIAL GP [A]
			(NOT SERVICED)
90	213-3270	1	SEAL-D-RING
91	213-6190	1	GEAR-SUN (28-TEETH)
94	221-0691	1	COVER
96	222-1904	4	GEAR-PLANETARY (23-TEETH)
97	252-2226	1	GEAR-RING
100	095-0670	3	BOLT (M12X1.75X45-MM)
101	131-3718	1	SEAL-O-RING
102	9S-8005	1	PLUG
	3K-0360	1	SEAL-O-RING
111	3P-3441	1	RING-RETAINING
112	3S-2708	5	PIN-SPRING
114	5F-3144	1	SEAL-O-RING
116	5L-4751	1	RING-RETAINING
117	5M-6509	1	SEAL-O-RING
118	6V-3532	16	BOLT (M20X2.5X60-MM)
119	6V-3668	6	BOLT (M12X1.75X30-MM)
123	6V-8675	1	BOLT (M12X1.75X35-MM)
125	8L-2777	4	SEAL-O-RING
127	8T-0657	9	BOLT (M20X2.5X160-MM)
129	8T-4121	3	WASHER-HARD (11X21X2.5-MM THK)
130	8T-4122	9	WASHER-HARD (17X32X3.5-MM THK)
132	8T-4195	4	BOLT (M10X1.5X30-MM)
134	8T-6466	3	BOLT (M10X1.5X60-MM)
135	8T-7338	11	BOLT (M16X2X45-MM)
136	1U-8846	AR	SEALANT-GASKET

[A] 185-3955, 185-3956,
185-3957, 185-3958 AXLE AR

00897500
PR: t05i29k58b0199

180-4376 DIFFERENTIAL GP-STEERING

**S/N: AZG1-906; AZH1-972;
AZJ1-1112; AZK1-968**

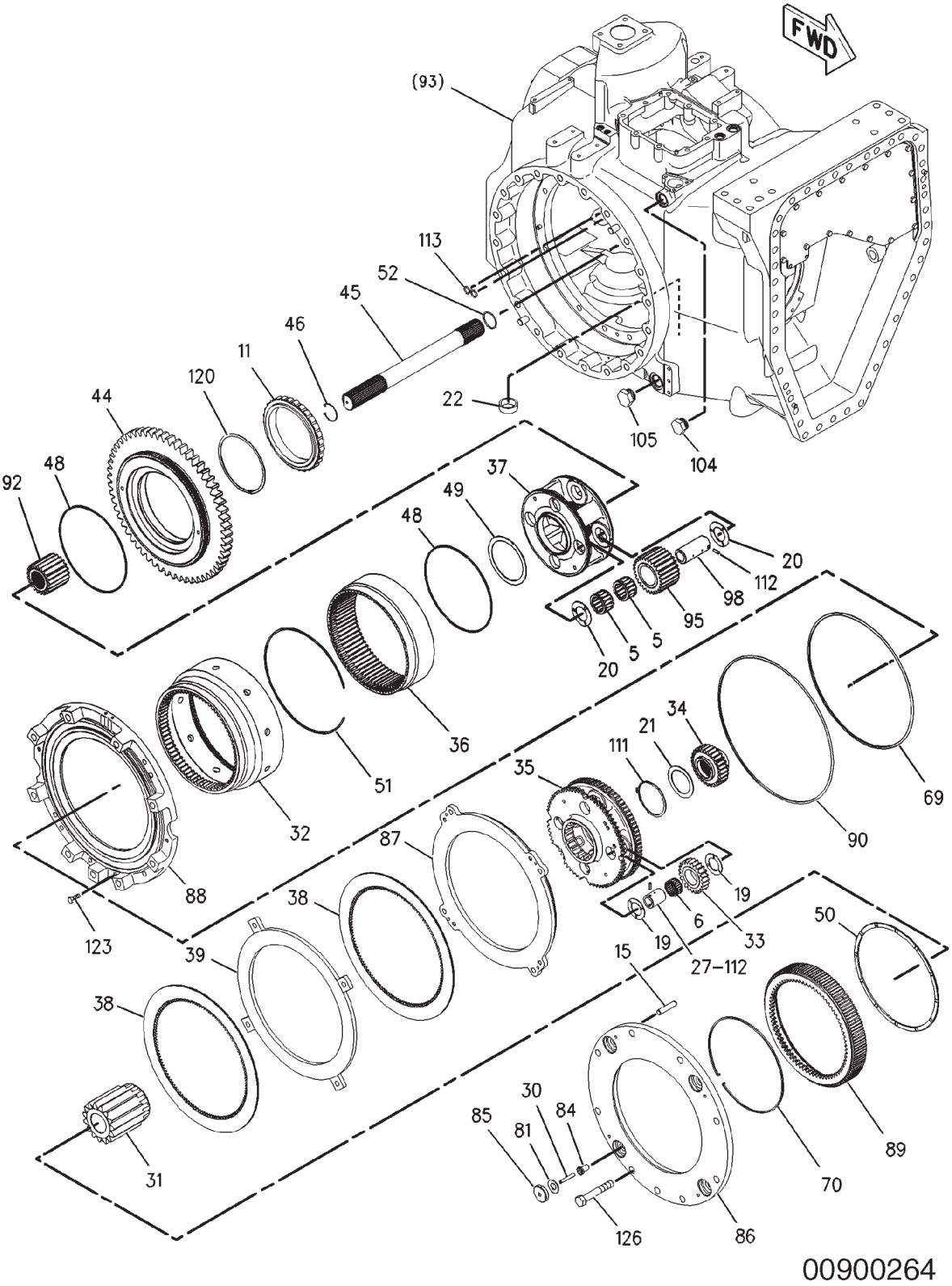

00900264

180-4376 DIFFERENTIAL GP-STEERING

S/N: AZG1-906; AZH1-972; AZJ1-1112; AZK1-968

ITEM	NUMBER	QTY	DESCRIPTION
-	180-4376	--	DIFFERENTIAL GP-STEERING [A] (NOT SERVICED)
5	1P-3958	8	ROLLER AS-SPECIAL
6	5M-0578	4	BEARING AS-ROLLER
11	6V-6654	1	BEARING AS-ROLLER
15	4K-3892	4	DOWEL
19	8E-8310	9	DISC-THRUST
20	8E-8316	8	DISC-THRUST
21	8E-8652	1	DISC-THRUST
22	8M-7160	1	MAGNET
27	174-9383	4	SHAFT-PLANETARY
30	176-1377	4	PIN-SPRING
31	179-9006	1	GEAR-SUN (15-TEETH)
32	239-9822	1	GEAR-RING (72-TEETH)
33	180-4379	4	GEAR-PLANETARY (23-TEETH)
34	180-4381	1	GEAR-SUN (28-TEETH)
35	180-4382	1	CARRIER-PLANETARY
36	180-4384	1	GEAR-RING (75-TEETH)
37	180-4387	1	CARRIER-PLANETARY
38	180-4502	2	DISC-FRICTION
39	180-4505	1	PLATE
44	183-3415	1	GEAR (58-TEETH)
45	183-3416	1	SHAFT
46	184-1693	1	RING-RETAINING
48	184-1695	2	SEAL-RING
49	184-1696	1	DISC-THRUST
50	184-1697	1	DISC-THRUST
51	185-4422	1	RING-LOCK
52	185-4423	1	RING-RETAINING
69	188-0635	1	SEAL-BRAKE
70	189-2089	1	RING-LOCK
81	199-7107	4	SPRING
84	210-8405	4	BUSHING
85	210-8406	4	PLATE-SPRING
86	221-5334	1	PLATE-REACTION
87	211-8280	1	PISTON-BRAKE
88	242-5086	1	HOUSING AS
	126-7260	1	PLUG
89	213-3269	1	HUB-BRAKE
90	213-3270	1	SEAL-D-RING
92	213-6191	1	GEAR-SUN (34-TEETH)
95	222-1903	4	GEAR-PLANETARY (27-TEETH)
98	223-0623	4	SHAFT-PLANETARY
104	9S-4181	1	PLUG
	7M-8485	1	SEAL-O-RING
105	9S-6130	1	PLUG
	2S-4078	1	SEAL-O-RING
111	3P-3441	1	RING-RETAINING
112	3S-2708	8	PIN-SPRING
113	4J-5140	2	SEAL-O-RING
120	6V-4442	1	RING-RETAINING
123	6V-8675	1	BOLT (M12X1.75X35-MM)
126	8T-0070	9	BOLT (M20X2.5X120-MM)

[A] 185-3955, 185-3956, 185-3957, 185-3958 AXLE AR

00900264
PR: t05i29k58b0200

180-4376 DIFFERENTIAL GP-STEERING

**S/N: AZG907-950; AZH973-983;
AZJ1113-1434; AZK969-979**

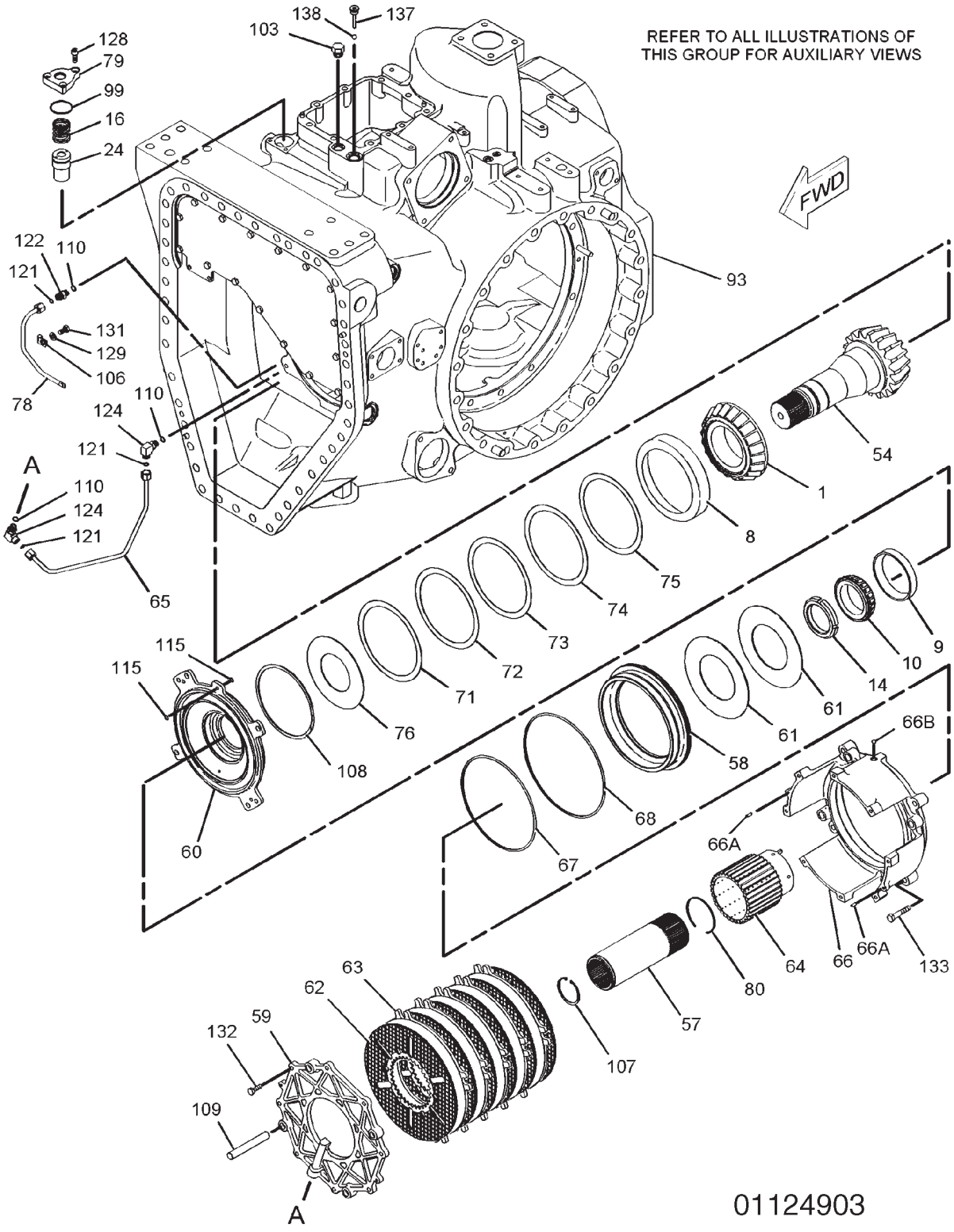

180-4376 DIFFERENTIAL GP-STEERING

S/N: AZG907-950; AZH973-983; AZJ1113-1434; AZK969-979

ITEM	NUMBER	QTY	DESCRIPTION
-	180-4376	--	DIFFERENTIAL GP-STEERING [A] (NOT SERVICED)
1	124-9536	1	CONE-BEARING
8	5P-7843	1	CUP-BEARING
9	6F-2956	1	CUP-BEARING
10	6V-0347	1	CONE-BEARING
14	4H-6507	1	LOCKNUT
16	7H-0832	1	SPRING
24	163-0592	1	VALVE GP-CHECK (HYDRAULIC)
	061-7540	1	SEAL-O-RING
54	186-2868	1	PINION-BEVEL (17-TEETH)
57	187-1377	1	COUPLING
58	227-9327	1	PISTON
59	187-3367	1	PLATE-END
60	187-3368	1	PLATE-SPRING
61	187-3369	2	SPRING
62	187-3370	6	DISC-FRICTION
63	187-3371	6	PLATE-CLUTCH
64	187-3372	1	HUB-CLUTCH
65	187-3373	1	TUBE AS
66	187-3374	1	HOUSING AS
66A	2H-1190	2	DOWEL
66B	4B-9782	1	BALL
67	188-0632	1	SEAL-BRAKE
68	188-0633	1	SEAL-BRAKE
71	191-1907	AR	SHIM (0.9MM THK)
72	191-1908	AR	SHIM (0.8MM THK)
73	191-1909	AR	SHIM (0.7MM THK)
74	191-1910	AR	SHIM (0.6MM THK)
75	191-1911	AR	SHIM (0.5MM THK)
76	191-1912	1	PLATE-RETAINER
78	195-3252	1	TUBE AS
79	197-5411	1	FLANGE
80	198-0288	1	RING-RETAINING

CONTINUED

[A] 185-3955, 185-3956, 185-3957, 185-3958 AXLE AR
[C] CHANGE FROM PREVIOUS TYPE

180-4376 DIFFERENTIAL GP-STEERING

**S/N: AZG907-950; AZH973-983;
AZJ1113-1434; AZK969-979**

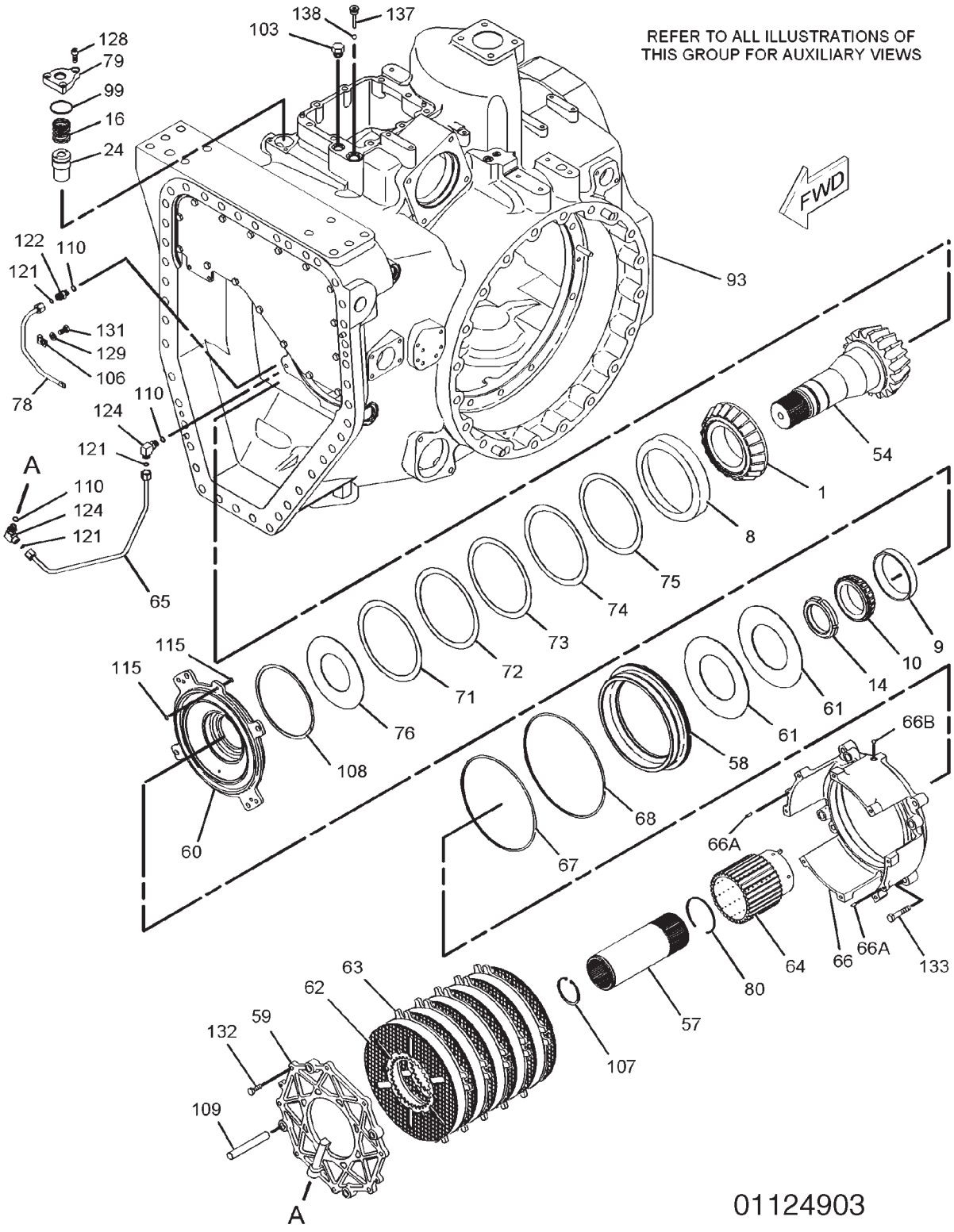

180-4376 DIFFERENTIAL GP-STEERING

**S/N: AZG907-950; AZH973-983;
AZJ1113-1434; AZK969-979**

ITEM	NUMBER	QTY	DESCRIPTION
-	180-4376	--	DIFFERENTIAL GP-STEERING [A] (NOT SERVICED)
93	225-6958	1	HOUSING GP-DIFFERENTIAL [C] (NOT SERVICED) (SEE BREAKDOWN FOR COMPONENTS)
99	005-8593	1	SEAL-O-RING
103	9S-4190	1	PLUG
106	1F-7567	1	CLIP
107	2H-5549	1	RING-RETAINING
108	2K-1381	1	RING-RETAINING
109	2Y-7489	4	DOWEL
110	3J-1907	3	SEAL-O-RING
115	5H-6005	2	SEAL-O-RING
121	6V-8397	3	SEAL-O-RING
122	6V-8636	1	CONNECTOR
124	6V-8724	2	ELBOW
128	8T-1159	3	BOLT-SOCKET HEAD (M10X1.5X25-MM)
129	8T-4121	1	WASHER-HARD (11X21X2.5-MM THK)
131	8T-4137	1	BOLT (M10X1.5X20-MM)
132	8T-4195	10	BOLT (M10X1.5X30-MM)
133	8T-4910	4	BOLT (M12X1.75X60-MM)
137	223-1637	1	PLUG AS
138	4B-9783	1	BALL

[A] 185-3955, 185-3956,
185-3957, 185-3958 AXLE AR
[C] CHANGE FROM PREVIOUS TYPE

01124903
PR: t05i29k58b0201

180-4376 DIFFERENTIAL GP-STEERING

**S/N: AZG907-950; AZH973-983;
AZJ1113-1434; AZK969-979**

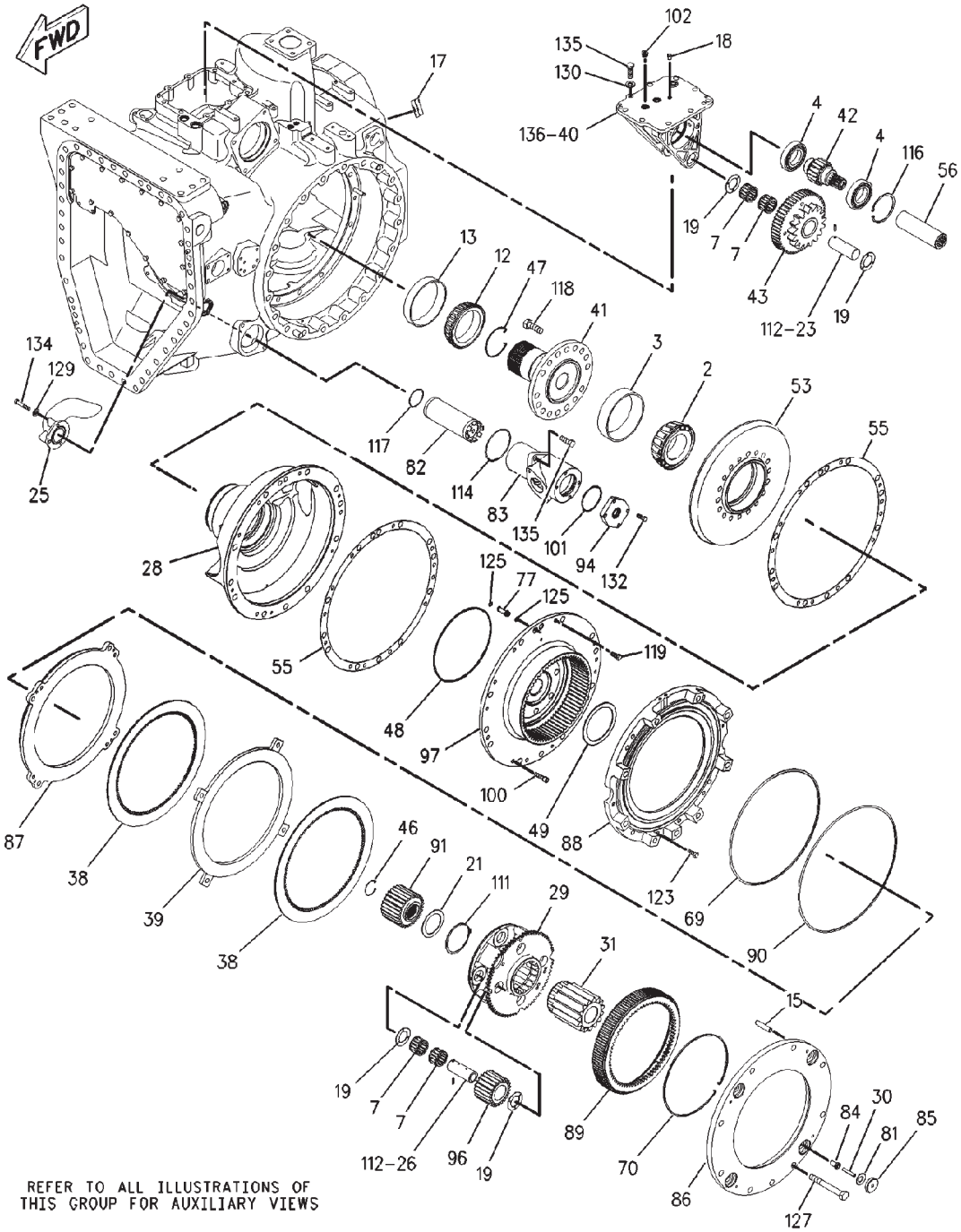

00897500

180-4376 DIFFERENTIAL GP-STEERING

**S/N: AZG907-950; AZH973-983;
AZJ1113-1434; AZK969-979**

ITEM	NUMBER	QTY	DESCRIPTION
-	180-4376	--	DIFFERENTIAL GP-STEERING [A] (NOT SERVICED)
2	132-6597	1	CONE-BEARING
3	132-6598	1	CUP-BEARING
4	1F-2771	2	BALL BEARING
7	5P-6254	10	BEARING
12	8D-2256	1	CONE-BEARING
13	9K-1171	1	CUP-BEARING
15	4K-3892	4	DOWEL
17	7X-7816	1	PLATE-SERIAL NUMBER (TRANSMISSION)
	-----	2	TACK
18	8C-5224	3	PLUG-SEAL
19	8E-8310	9	DISC-THRUST
21	8E-8652	1	DISC-THRUST
23	111-7068	1	SHAFT AS
	2A-3746	1	PLUG-CUP
25	-----	1	TUBE
26	174-9381	4	SHAFT-PLANETARY
28	174-9407	1	SUPPORT
29	174-9410	1	CARRIER-PLANETARY
30	176-1377	4	PIN-SPRING
31	179-9006	1	GEAR-SUN (15-TEETH)
38	180-4502	2	DISC-FRICTION
39	180-4505	1	PLATE
40	180-8428	1	SUPPORT AS
	2A-3746	4	PLUG-CUP
41	183-3411	1	SHAFT-BEVEL GEAR
42	183-3413	1	GEAR (18-TEETH)
43	183-3414	1	GEAR (54-TEETH)
46	184-1693	1	RING-RETAINING
47	184-1694	1	RING-RETAINING
48	184-1695	1	SEAL-RING
49	184-1696	1	DISC-THRUST
53	186-2867	1	GEAR-BEVEL (48-TEETH)
55	186-2869	2	SHIM PACK (INCLUDES 14-SHIMS)
56	235-6166	1	COUPLING
69	188-0635	1	SEAL-BRAKE
70	189-2089	1	RING-LOCK
77	192-5602	2	SLEEVE
81	199-7107	4	SPRING
82	207-5993	1	SCREEN
83	207-7007	1	HOUSING
84	210-8405	4	BUSHING
85	210-8406	4	PLATE-SPRING
86	221-5334	1	PLATE-REACTION
87	211-8280	1	PISTON-BRAKE
88	242-5086	1	HOUSING AS
	126-7260	1	PLUG
89	213-3269	1	HUB-BRAKE

CONTINUED

[A] 185-3955, 185-3956,
185-3957, 185-3958 AXLE AR

180-4376 DIFFERENTIAL GP-STEERING

**S/N: AZG907-950; AZH973-983;
AZJ1113-1434; AZK969-979**

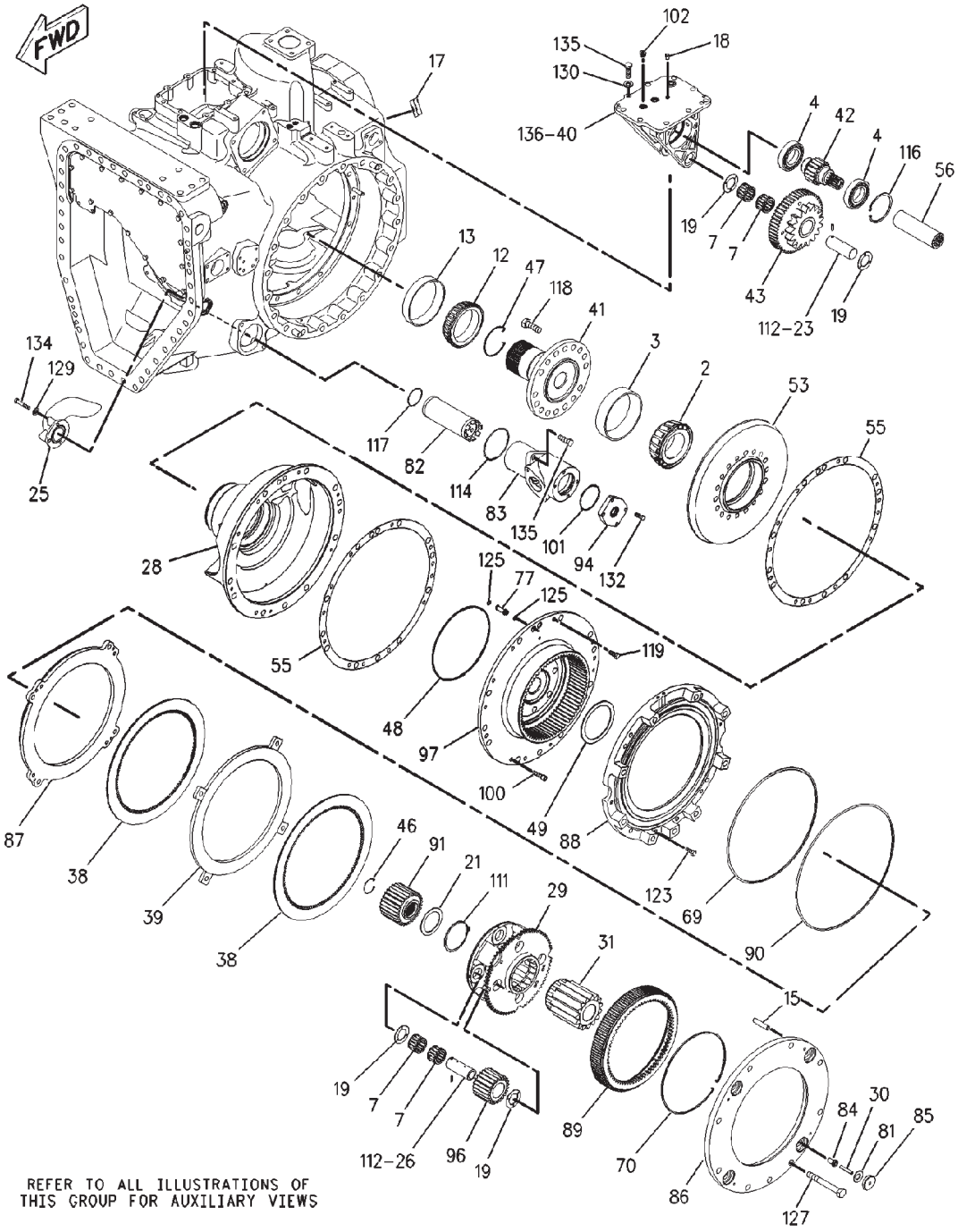

00897500

180-4376 DIFFERENTIAL GP-STEERING

**S/N: AZG907-950; AZH973-983;
AZJ1113-1434; AZK969-979**

ITEM	NUMBER	QTY	DESCRIPTION
-	180-4376	--	DIFFERENTIAL GP [A] (NOT SERVICED)
90	213-3270	1	SEAL-D-RING
91	213-6190	1	GEAR-SUN (28-TEETH)
94	221-0691	1	COVER
96	222-1904	4	GEAR-PLANETARY (23-TEETH)
97	252-2226	1	GEAR-RING
100	095-0670	3	BOLT (M12X1.75X45-MM)
101	131-3718	1	SEAL-O-RING
102	9S-8005	1	PLUG
	3K-0360	1	SEAL-O-RING
111	3P-3441	1	RING-RETAINING
112	3S-2708	5	PIN-SPRING
114	5F-3144	1	SEAL-O-RING
116	5L-4751	1	RING-RETAINING
117	5M-6509	1	SEAL-O-RING
118	6V-3532	16	BOLT (M20X2.5X60-MM)
119	6V-3668	6	BOLT (M12X1.75X30-MM)
123	6V-8675	1	BOLT (M12X1.75X35-MM)
125	8L-2777	4	SEAL-O-RING
127	8T-0657	9	BOLT (M20X2.5X160-MM)
129	8T-4121	3	WASHER-HARD (11X21X2.5-MM THK)
130	8T-4122	9	WASHER-HARD (17X32X3.5-MM THK)
132	8T-4195	4	BOLT (M10X1.5X30-MM)
134	8T-6466	3	BOLT (M10X1.5X60-MM)
135	8T-7338	11	BOLT (M16X2X45-MM)
136	1U-8846	AR	SEALANT-GASKET

[A] 185-3955, 185-3956,
185-3957, 185-3958 AXLE AR

00897500
PR: t05i29k58b0202

180-4376 DIFFERENTIAL GP-STEERING

**S/N: AZG907-950; AZH973-983;
AZJ1113-1434; AZK969-979**

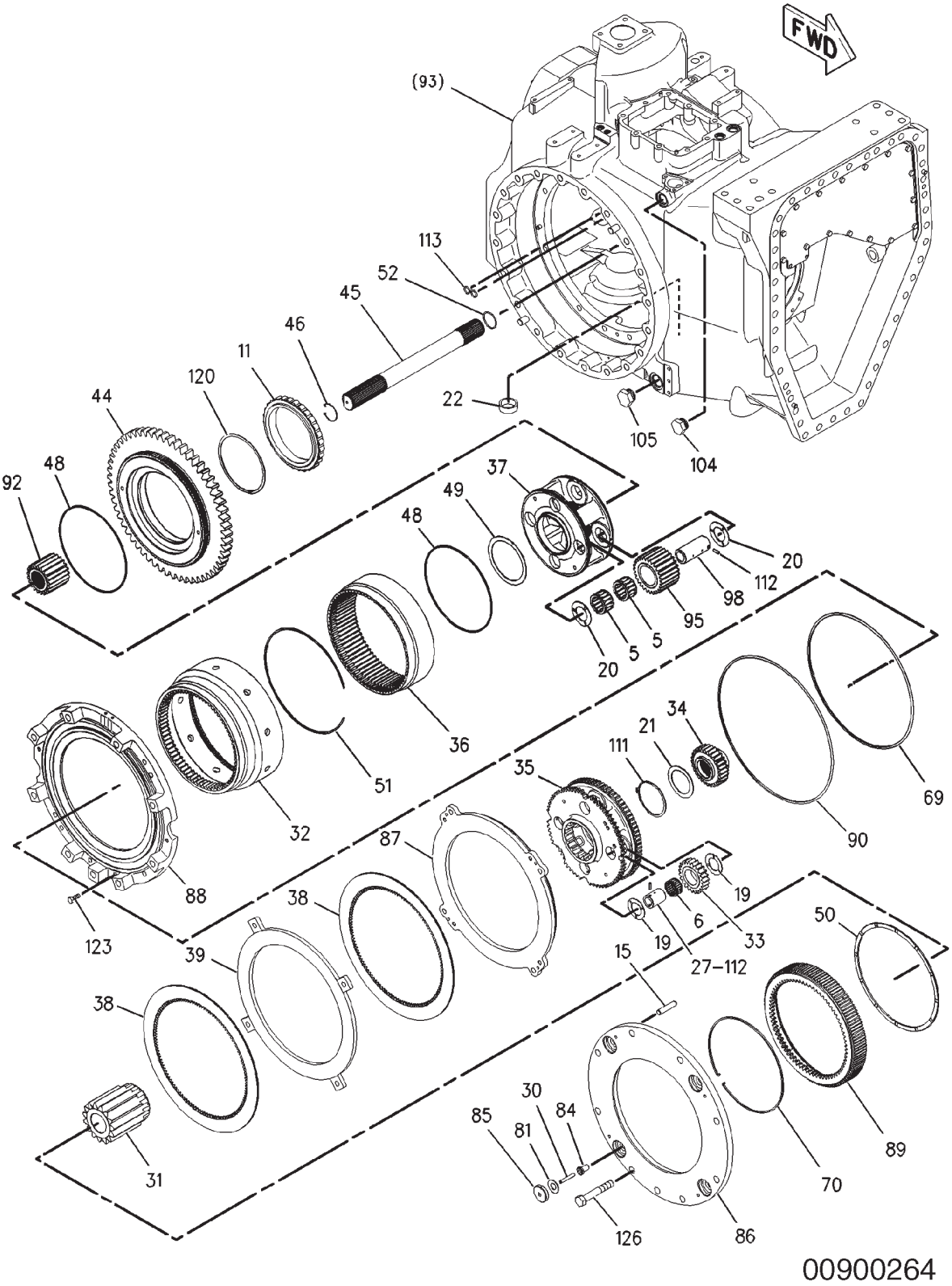

00900264

180-4376 DIFFERENTIAL GP-STEERING

S/N: AZG907-950; AZH973-983; AZJ1113-1434; AZK969-979

ITEM	NUMBER	QTY	DESCRIPTION
-	180-4376	--	DIFFERENTIAL GP-STEERING [A] (NOT SERVICED)
5	1P-3958	8	ROLLER AS-SPECIAL
6	5M-0578	4	BEARING AS-ROLLER
11	6V-6654	1	BEARING AS-ROLLER
15	4K-3892	4	DOWEL
19	8E-8310	8	DISC-THRUST
20	8E-8316	8	DISC-THRUST
21	8E-8652	1	DISC-THRUST
22	8M-7160	1	MAGNET
27	174-9383	4	SHAFT-PLANETARY
30	176-1377	4	PIN-SPRING
31	179-9006	1	GEAR-SUN (15-TEETH)
32	239-9822	1	GEAR-RING (72-TEETH)
33	180-4379	4	GEAR-PLANETARY (23-TEETH)
34	180-4381	1	GEAR-SUN (28-TEETH)
35	180-4382	1	CARRIER-PLANETARY
36	180-4384	1	GEAR-RING (75-TEETH)
37	180-4387	1	CARRIER-PLANETARY
38	180-4502	2	DISC-FRICTION
39	180-4505	1	PLATE
44	183-3415	1	GEAR (58-TEETH)
45	183-3416	1	SHAFT
46	184-1693	1	RING-RETAINING
48	184-1695	2	SEAL-RING
49	184-1696	1	DISC-THRUST
50	184-1697	1	DISC-THRUST
51	185-4422	1	RING-LOCK
52	185-4423	1	RING-RETAINING
69	188-0635	1	SEAL-BRAKE
70	189-2089	1	RING-LOCK
81	199-7107	4	SPRING
84	210-8405	4	BUSHING
85	210-8406	4	PLATE-SPRING
86	221-5334	1	PLATE-REACTION
87	211-8280	1	PISTON-BRAKE
88	242-5086	1	HOUSING AS
	126-7260	1	PLUG
89	213-3269	1	HUB-BRAKE
90	213-3270	1	SEAL-D-RING
92	213-6191	1	GEAR-SUN (34-TEETH)
95	222-1903	4	GEAR-PLANETARY (27-TEETH)
98	223-0623	4	SHAFT-PLANETARY
104	9S-4181	1	PLUG
	7M-8485	1	SEAL-O-RING
105	9S-6130	1	PLUG
	2S-4078	1	SEAL-O-RING
111	3P-3441	1	RING-RETAINING
112	3S-2708	8	PIN-SPRING
113	4J-5140	2	SEAL-O-RING
120	6V-4442	1	RING-RETAINING
123	6V-8675	1	BOLT (M12X1.75X35-MM)
126	8T-0070	9	BOLT (M20X2.5X120-MM)

[A] 185-3955, 185-3956, 185-3957, 185-3958 AXLE AR

00900264
PR: t05i29k58b0203

180-4376 DIFFERENTIAL GP-STEERING

**S/N: AZG951-1012; AZH984-1004;
AZJ1435-1896; AZK980-1002**

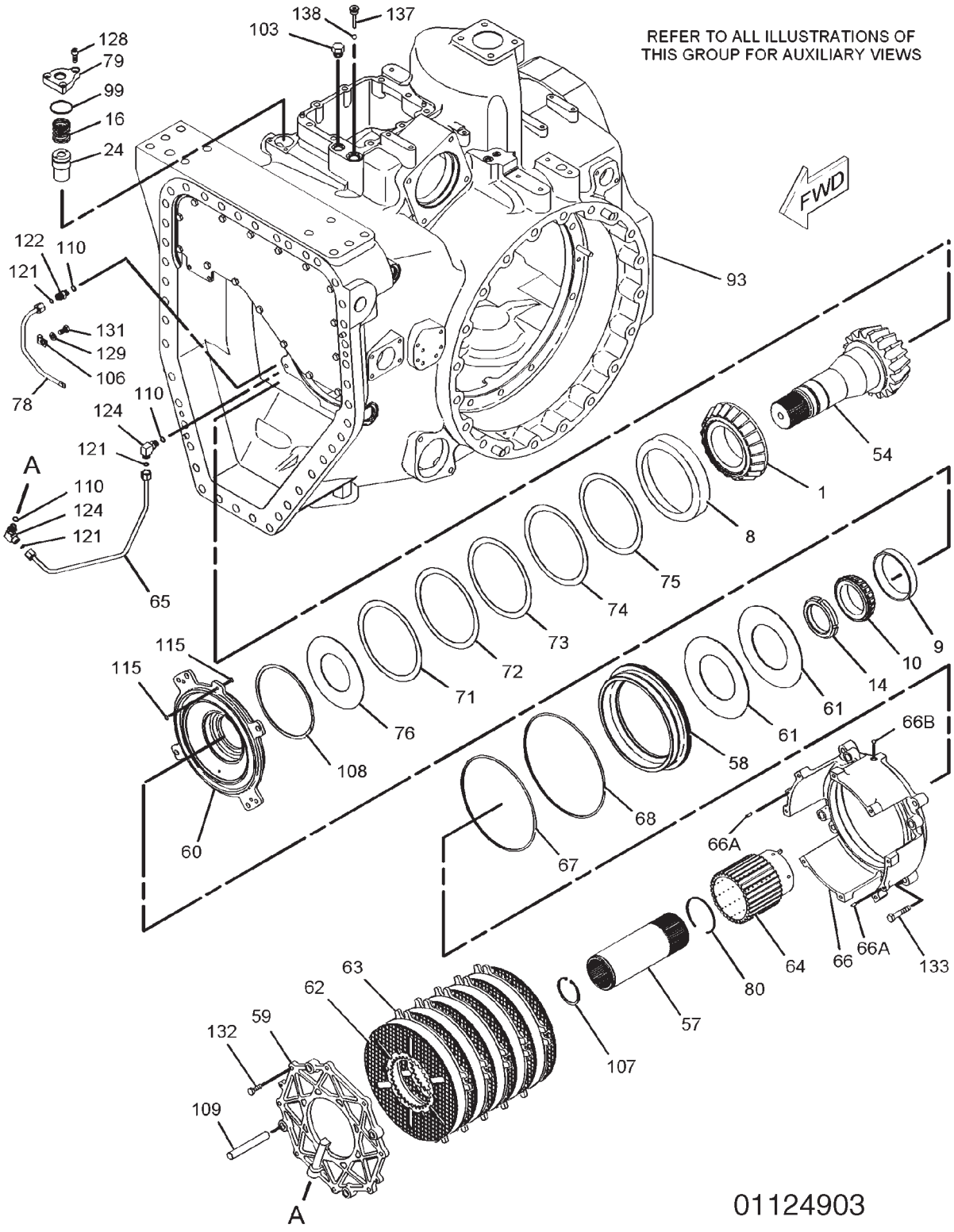

180-4376 DIFFERENTIAL GP-STEERING

S/N: AZG951-1012; AZH984-1004; AZJ1435-1896; AZK980-1002

ITEM	NUMBER	QTY	DESCRIPTION
-	180-4376	--	DIFFERENTIAL GP-STEERING [A] (NOT SERVICED)
1	124-9536	1	CONE-BEARING
8	5P-7843	1	CUP-BEARING
9	6F-2956	1	CUP-BEARING
10	6V-0347	1	CONE-BEARING
14	4H-6507	1	LOCKNUT
16	7H-0832	1	SPRING
24	163-0592	1	VALVE GP-CHECK (HYDRAULIC)
	061-7540	1	SEAL-O-RING
54	186-2868	1	PINION-BEVEL (17-TEETH)
57	187-1377	1	COUPLING
58	227-9327	1	PISTON
59	187-3367	1	PLATE-END
60	187-3368	1	PLATE-SPRING
61	187-3369	2	SPRING
62	187-3370	6	DISC-FRICTION
63	187-3371	6	PLATE-CLUTCH
64	187-3372	1	HUB-CLUTCH
65	187-3373	1	TUBE AS
66	187-3374	1	HOUSING AS
66A	2H-1190	2	DOWEL
66B	4B-9782	1	BALL
67	188-0632	1	SEAL-BRAKE
68	188-0633	1	SEAL-BRAKE
71	191-1907	AR	SHIM (0.9MM THK)
72	191-1908	AR	SHIM (0.8MM THK)
73	191-1909	AR	SHIM (0.7MM THK)
74	191-1910	AR	SHIM (0.6MM THK)
75	191-1911	AR	SHIM (0.5MM THK)
76	191-1912	1	PLATE-RETAINER
78	195-3252	1	TUBE AS
79	197-5411	1	FLANGE
80	198-0288	1	RING-RETAINING
93	242-0962	1	HOUSING GP-DIFFERENTIAL [C] (SEE BREAKDOWN FOR COMPONENTS)
99	005-8593	1	SEAL-O-RING

CONTINUED

[A] 185-3955, 185-3956, 185-3957, 185-3958 AXLE AR
[C] CHANGE FROM PREVIOUS TYPE

180-4376 DIFFERENTIAL GP-STEERING

**S/N: AZG951-1012; AZH984-1004;
AZJ1435-1896; AZK980-1002**

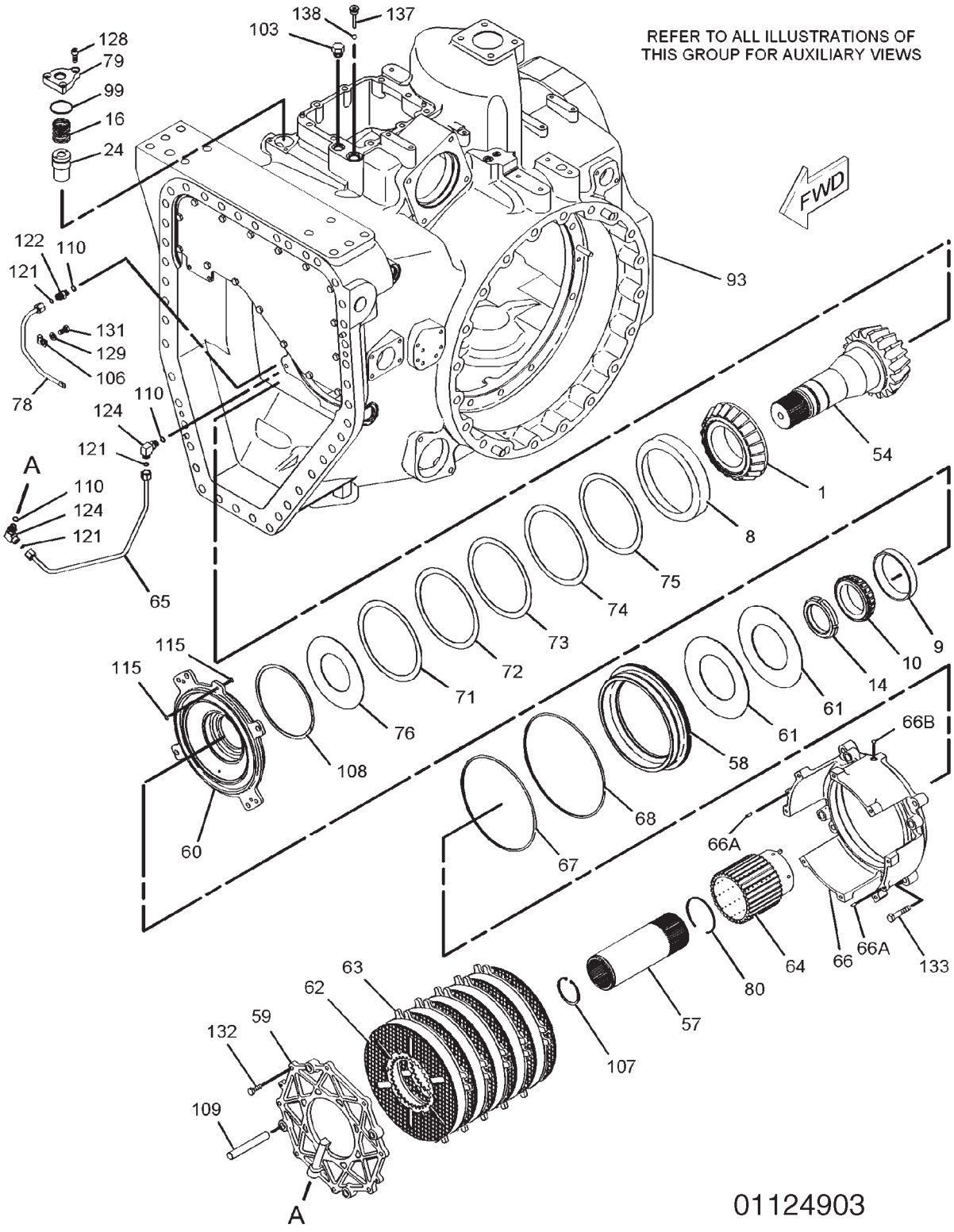

180-4376 DIFFERENTIAL GP-STEERING

S/N: AZG951-1012; AZH984-1004; AZJ1435-1896; AZK980-1002

ITEM	NUMBER	QTY	DESCRIPTION
-	180-4376	--	DIFFERENTIAL GP-STEERING [A] (NOT SERVICED)
103	9S-4190	1	PLUG
	2M-9780	1	SEAL-O-RING
106	1F-7567	1	CLIP
107	2H-5549	1	RING-RETAINING
108	2K-1381	1	RING-RETAINING
109	2Y-7489	4	DOWEL
110	3J-1907	3	SEAL-O-RING
115	5H-6005	2	SEAL-O-RING
121	6V-8397	3	SEAL-O-RING
122	6V-8636	1	CONNECTOR
124	6V-8724	2	ELBOW
128	8T-1159	3	BOLT-SOCKET HEAD (M10X1.5X25-MM)
129	8T-4121	1	WASHER-HARD (11X21X2.5-MM THK)
131	8T-4137	1	BOLT (M10X1.5X20-MM)
132	8T-4195	10	BOLT (M10X1.5X30-MM)
133	8T-4910	4	BOLT (M12X1.75X60-MM)
137	223-1637	1	PLUG AS
138	4B-9783	1	BALL

[A] 185-3955, 185-3956,
185-3957, 185-3958 AXLE AR

01124903
PR: t05i29k58b0204

180-4376 DIFFERENTIAL GP-STEERING

**S/N: AZG951-1012; AZH984-1004;
AZJ1435-1896; AZK980-1002**

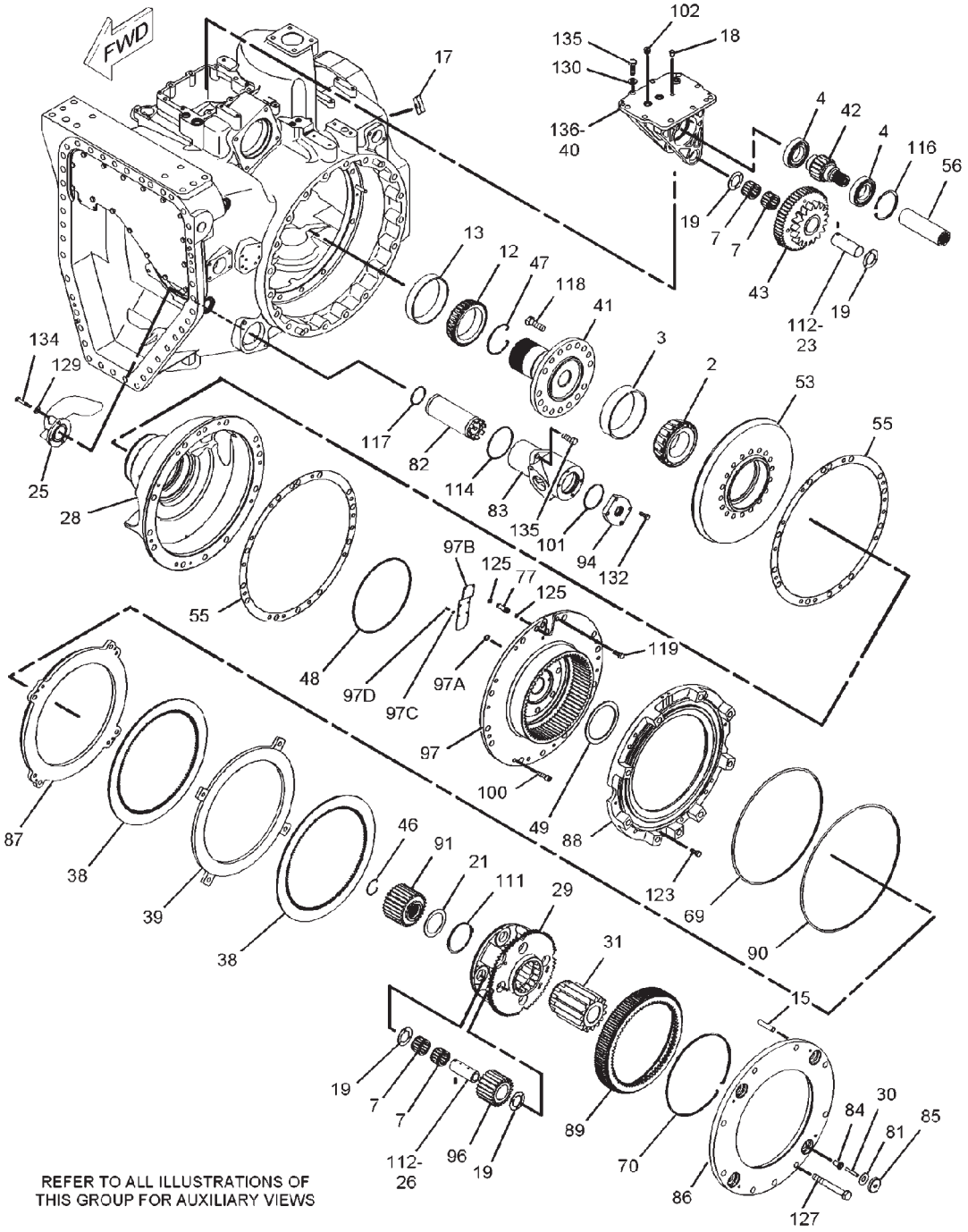

01125249

180-4376 DIFFERENTIAL GP-STEERING

S/N: AZG951-1012; AZH984-1004; AZJ1435-1896; AZK980-1002

ITEM	NUMBER	QTY	DESCRIPTION
-	180-4376	--	DIFFERENTIAL GP-STEERING [A] (NOT SERVICED)
2	132-6597	1	CONE-BEARING
3	132-6598	1	CUP-BEARING
4	1F-2771	2	BALL BEARING
7	5P-6254	10	BEARING
12	8D-2256	1	CONE-BEARING
13	9K-1171	1	CUP-BEARING
15	4K-3892	4	DOWEL
17	7X-7816	1	PLATE-SERIAL NUMBER (TRANSMISSION)
	-----	2	TACK
18	8C-5224	3	PLUG-SEAL
19	8E-8310	10	DISC-THRUST
21	8E-8652	1	DISC-THRUST
23	111-7068	1	SHAFT AS
	2A-3746	1	PLUG-CUP
25	-----	1	TUBE
26	174-9381	4	SHAFT-PLANETARY
28	174-9407	1	SUPPORT
29	174-9410	1	CARRIER-PLANETARY
30	176-1377	4	PIN-SPRING
31	179-9006	1	GEAR-SUN (15-TEETH)
38	180-4502	2	DISC-FRICTION
39	180-4505	1	PLATE
40	180-8428	1	SUPPORT AS
	2A-3746	4	PLUG-CUP
41	183-3411	1	SHAFT-BEVEL GEAR
42	183-3413	1	GEAR (18-TEETH)
43	183-3414	1	GEAR (54-TEETH)
46	184-1693	1	RING-RETAINING
47	184-1694	1	RING-RETAINING
48	184-1695	1	SEAL-RING
49	184-1696	1	DISC-THRUST
53	186-2867	1	GEAR-BEVEL (48-TEETH)
55	186-2869	2	SHIM PACK (INCLUDES 14-SHIMS)
56	235-6166	1	COUPLING
69	188-0635	1	SEAL-BRAKE
70	189-2089	1	RING-LOCK
77	192-5602	2	SLEEVE
81	199-7107	4	SPRING
82	207-5993	1	SCREEN
83	207-7007	1	HOUSING
84	210-8405	4	BUSHING
85	210-8406	4	PLATE-SPRING
86	221-5334	1	PLATE-REACTION
87	211-8280	1	PISTON-BRAKE
88	242-5086	2	HOUSING AS
	126-7260	2	PLUG
89	213-3269	2	HUB-BRAKE

CONTINUED

[A] 185-3955, 185-3956, 185-3957, 185-3958 AXLE AR

180-4376 DIFFERENTIAL GP-STEERING

**S/N: AZG951-1012; AZH984-1004;
AZJ1435-1896; AZK980-1002**

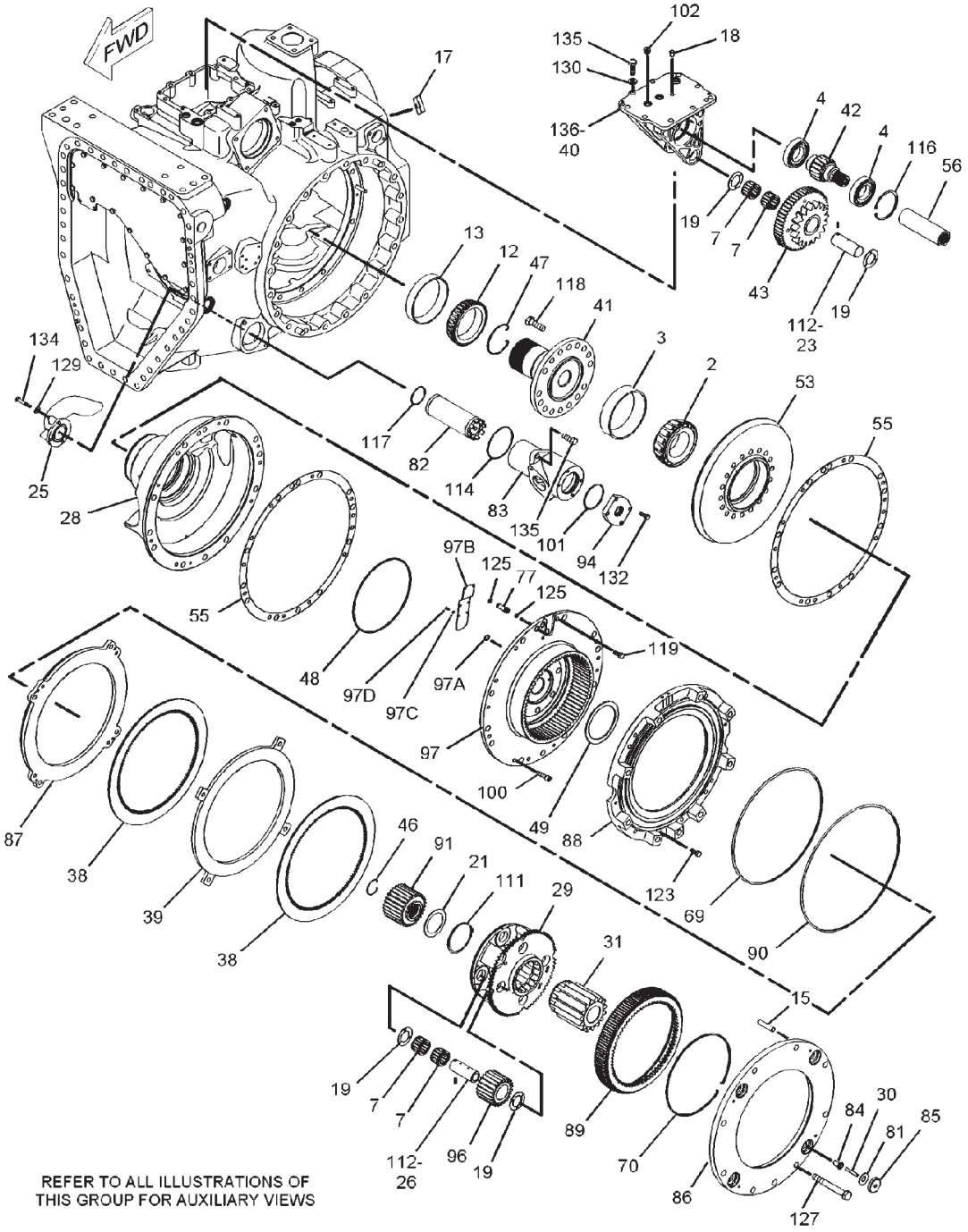

01125249

180-4376 DIFFERENTIAL GP-STEERING

S/N: AZG951-1012; AZH984-1004; AZJ1435-1896; AZK980-1002

ITEM	NUMBER	QTY	DESCRIPTION
-	180-4376	--	DIFFERENTIAL GP [A]
			(NOT SERVICED)
90	213-3270	1	SEAL-D-RING
91	213-6190	1	GEAR-SUN (28-TEETH)
94	221-0691	1	COVER
96	222-1904	4	GEAR-PLANETARY (23-TEETH)
97	252-2227	1	GEAR AS-RING
97A	4N-0952	1	PLUG-CUP
97B	244-3699	1	PLATE
97C	096-6166	6	WASHER-HARD (4.5X9X1-MM THK)
97D	8T-0285	6	SCREW-MACHINE (M4X0.7X12-MM)
100	095-0670	3	BOLT (M12X1.75X45-MM)
101	131-3718	1	SEAL-O-RING
102	9S-8005	1	PLUG
	3K-0360	1	SEAL-O-RING
111	3P-3441	1	RING-RETAINING
112	3S-2708	5	PIN-SPRING
114	5F-3144	1	SEAL-O-RING
116	5L-4751	1	RING-RETAINING
117	5M-6509	1	SEAL-O-RING
118	6V-3532	16	BOLT (M20X2.5X60-MM)
119	6V-3668	6	BOLT (M12X1.75X30-MM)
123	6V-8675	1	BOLT (M12X1.75X35-MM)
125	8L-2777	4	SEAL-O-RING
127	8T-0657	9	BOLT (M20X2.5X160-MM)
129	8T-4121	3	WASHER-HARD (11X21X2.5-MM THK)
130	8T-4122	9	WASHER-HARD (17X32X3.5-MM THK)
132	8T-4195	4	BOLT (M10X1.5X30-MM)
134	8T-6466	3	BOLT (M10X1.5X60-MM)
135	8T-7338	11	BOLT (M16X2X45-MM)
136	1U-8846	AR	SEALANT-GASKET

[A] 185-3955, 185-3956,
185-3957, 185-3958 AXLE AR

01125249
PR: t05i29k58b0205

180-4376 DIFFERENTIAL GP-STEERING

**S/N: AZG951-1012; AZH984-1004;
AZJ1435-1896; AZK980-1002**

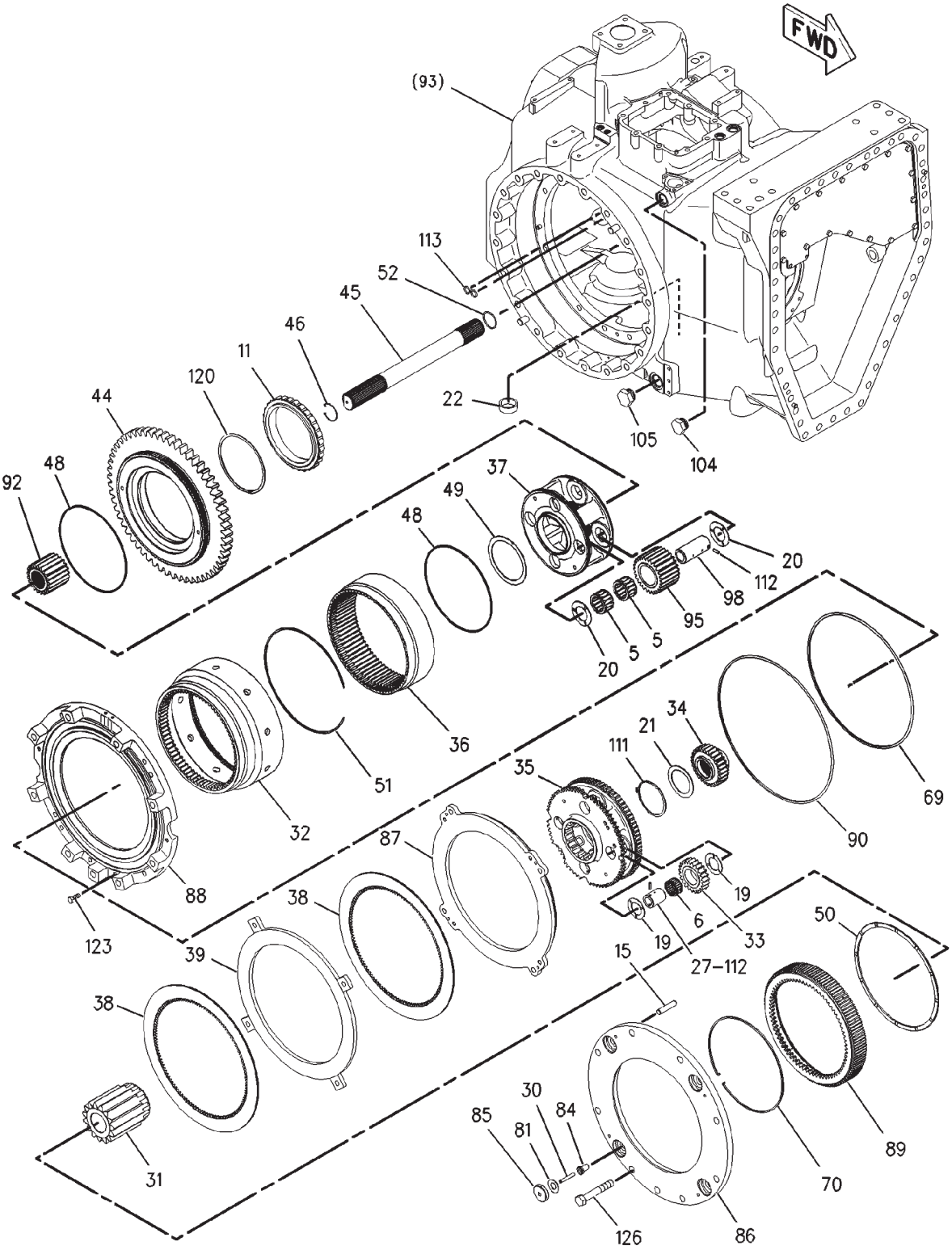

180-4376 DIFFERENTIAL GP-STEERING

S/N: AZG951-1012; AZH984-1004; AZJ1435-1896; AZK980-1002

ITEM	NUMBER	QTY	DESCRIPTION
-	180-4376	--	DIFFERENTIAL GP-STEERING [A] (NOT SERVICED)
5	1P-3958	8	ROLLER AS-SPECIAL
6	5M-0578	4	BEARING AS-ROLLER
11	6V-6654	1	BEARING AS-ROLLER
15	4K-3892	4	DOWEL
19	8E-8310	8	DISC-THRUST
20	8E-8316	8	DISC-THRUST
21	8E-8652	1	DISC-THRUST
22	8M-7160	1	MAGNET
27	174-9383	4	SHAFT-PLANETARY
30	176-1377	4	PIN-SPRING
31	179-9006	1	GEAR-SUN (15-TEETH)
32	239-9822	1	GEAR-RING (72-TEETH)
33	180-4379	4	GEAR-PLANETARY (23-TEETH)
34	180-4381	1	GEAR-SUN (28-TEETH)
35	180-4382	1	CARRIER-PLANETARY
36	180-4384	1	GEAR-RING (75-TEETH)
37	180-4387	1	CARRIER-PLANETARY
38	180-4502	2	DISC-FRICTION
39	180-4505	1	PLATE
44	183-3415	1	GEAR (58-TEETH)
45	183-3416	1	SHAFT
46	184-1693	1	RING-RETAINING
48	184-1695	2	SEAL-RING
49	184-1696	1	DISC-THRUST
50	184-1697	1	DISC-THRUST
51	185-4422	1	RING-LOCK
52	185-4423	1	RING-RETAINING
69	188-0635	1	SEAL-BRAKE
70	189-2089	1	RING-LOCK
81	199-7107	4	SPRING
84	210-8405	4	BUSHING
85	210-8406	4	PLATE-SPRING
86	221-5334	1	PLATE-REACTION
87	211-8280	1	PISTON-BRAKE
88	242-5086	1	HOUSING AS
	126-7260	1	PLUG
89	213-3269	1	HUB-BRAKE
90	213-3270	1	SEAL-D-RING
92	213-6191	1	GEAR-SUN (34-TEETH)
95	222-1903	4	GEAR-PLANETARY (27-TEETH)
98	223-0623	4	SHAFT-PLANETARY
104	9S-4181	1	PLUG
	7M-8485	1	SEAL-O-RING
105	9S-6130	1	PLUG
	2S-4078	1	SEAL-O-RING
111	3P-3441	1	RING-RETAINING
112	3S-2708	8	PIN-SPRING
113	4J-5140	2	SEAL-O-RING
120	6V-4442	1	RING-RETAINING
123	6V-8675	1	BOLT (M12X1.75X35-MM)
126	8T-0070	9	BOLT (M20X2.5X120-MM)

[A] 185-3955, 185-3956, 185-3957, 185-3958 AXLE AR

180-4376 DIFFERENTIAL GP-STEERING

S/N: AZG1013-UP; AZH1005-UP; AZJ1897-UP

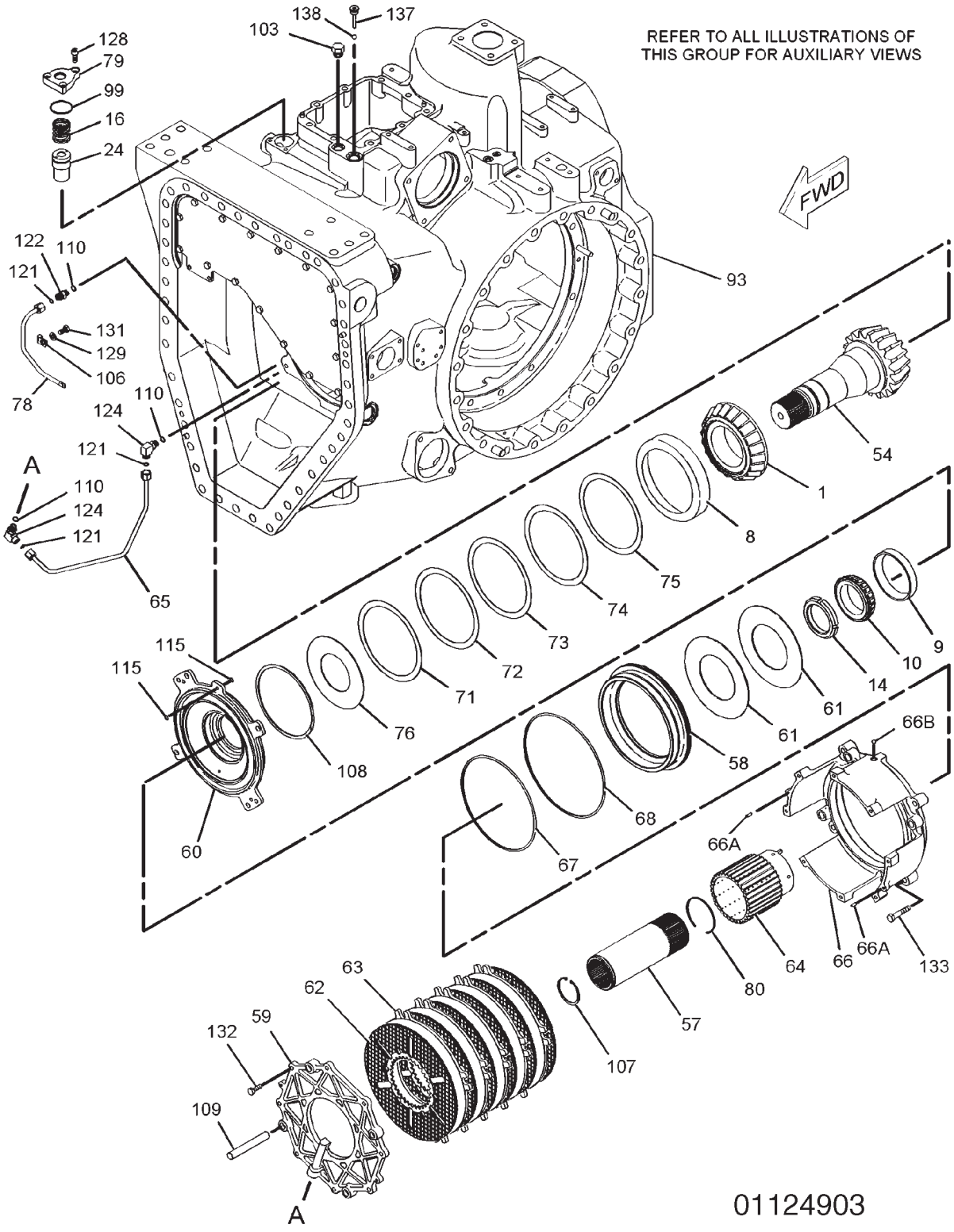

180-4376 DIFFERENTIAL GP-STEERING

S/N: AZG1013-UP; AZH1005-UP; AZJ1897-UP

ITEM	NUMBER	QTY	DESCRIPTION
-	180-4376	--	DIFFERENTIAL GP-STEERING [A] (NOT SERVICED)
1	124-9536	1	CONE-BEARING
8	5P-7843	1	CUP-BEARING
9	6F-2956	1	CUP-BEARING
10	6V-0347	1	CONE-BEARING
14	4H-6507	1	LOCKNUT
16	7H-0832	1	SPRING
24	163-0592	1	VALVE GP-CHECK (HYDRAULIC)
	061-7540	1	SEAL-O-RING
54	186-2868	1	PINION-BEVEL (17-TEETH)
57	187-1377	1	COUPLING
58	227-9327	1	PISTON
59	187-3367	1	PLATE-END
60	187-3368	1	PLATE-SPRING
61	187-3369	2	SPRING
62	187-3370	6	DISC-FRICTION
63	187-3371	6	PLATE-CLUTCH
64	187-3372	1	HUB-CLUTCH
65	187-3373	1	TUBE AS
66	187-3374	1	HOUSING AS
66A	2H-1190	2	DOWEL
66B	4B-9782	1	BALL
67	188-0632	1	SEAL-BRAKE
68	188-0633	1	SEAL-BRAKE
71	191-1907	AR	SHIM (0.9MM THK)
72	191-1908	AR	SHIM (0.8MM THK)
73	191-1909	AR	SHIM (0.7MM THK)
74	191-1910	AR	SHIM (0.6MM THK)
75	191-1911	AR	SHIM (0.5MM THK)
76	191-1912	1	PLATE-RETAINER
78	195-3252	1	TUBE AS
79	197-5411	1	FLANGE
80	198-0288	1	RING-RETAINING

CONTINUED

[A] 185-3955, 185-3956, 185-3957 AXLE AR

180-4376 DIFFERENTIAL GP-STEERING

S/N: AZG1013-UP; AZH1005-UP; AZJ1897-UP

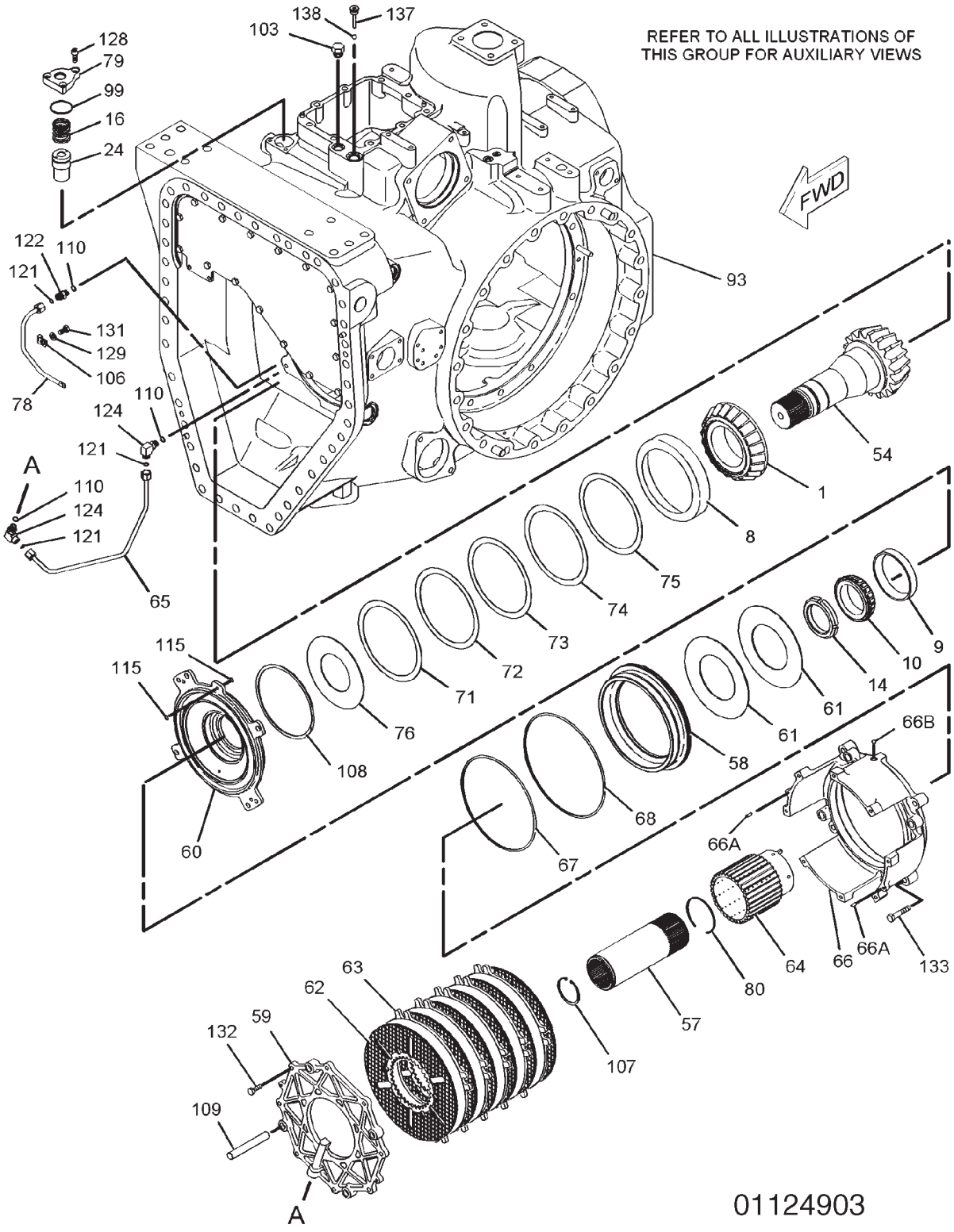

180-4376 DIFFERENTIAL GP-STEERING

S/N: AZG1013-UP; AZH1005-UP; AZJ1897-UP

ITEM	NUMBER	QTY	DESCRIPTION
-	180-4376	--	DIFFERENTIAL GP-STEERING [A] (NOT SERVICED)
93	242-0962	1	HOUSING GP-DIFFERENTIAL (SEE BREAKDOWN FOR COMPONENTS)
99	005-8593	1	SEAL-O-RING
103	9S-4190	1	PLUG
	2M-9780	1	SEAL-O-RING
106	1F-7567	1	CLIP
107	2H-5549	1	RING-RETAINING
108	2K-1381	1	RING-RETAINING
109	2Y-7489	4	DOWEL
110	3J-1907	3	SEAL-O-RING
115	5H-6005	2	SEAL-O-RING
121	6V-8397	3	SEAL-O-RING
122	6V-8636	1	CONNECTOR
124	6V-8724	2	ELBOW
128	8T-1159	3	BOLT-SOCKET HEAD (M10X1.5X25-MM)
129	8T-4121	1	WASHER-HARD (11X21X2.5-MM THK)
131	8T-4137	1	BOLT (M10X1.5X20-MM)
132	8T-4195	10	BOLT (M10X1.5X30-MM)
133	8T-4910	4	BOLT (M12X1.75X60-MM)
137	223-1637	1	PLUG AS
138	4B-9783	1	BALL

[A] 185-3955, 185-3956, 185-3957 AXLE AR

01124903
PR: t05i29k58b0207

180-4376 DIFFERENTIAL GP-STEERING

S/N: AZG1013-UP; AZH1005-UP; AZJ1897-UP

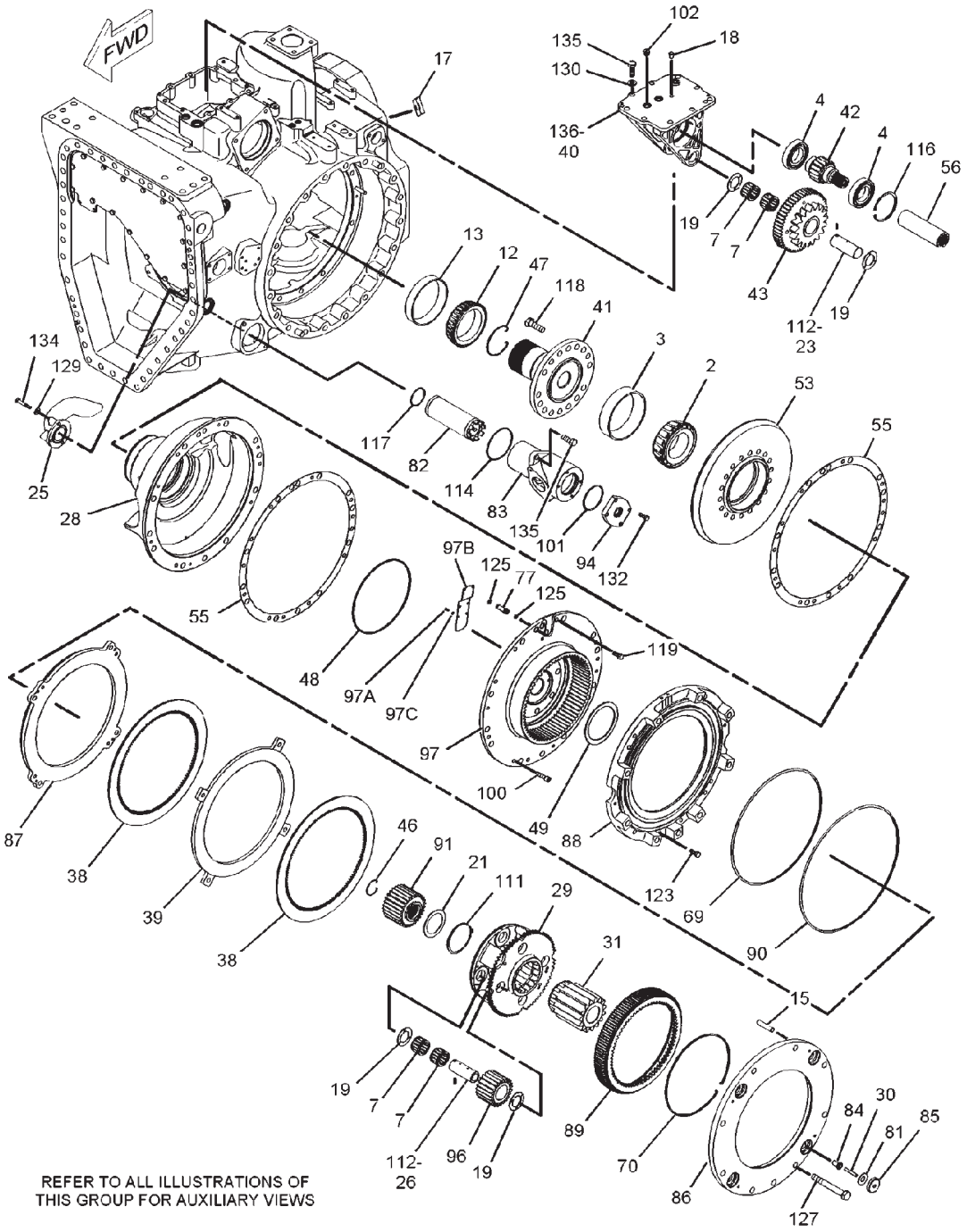

REFER TO ALL ILLUSTRATIONS OF
THIS GROUP FOR AUXILIARY VIEWS

01125322

180-4376 DIFFERENTIAL GP-STEERING

S/N: AZG1013-UP; AZH1005-UP; AZJ1897-UP

ITEM	NUMBER	QTY	DESCRIPTION
-	180-4376	--	DIFFERENTIAL GP-STEERING [A]
			(NOT SERVICED)
2	132-6597	1	CONE-BEARING
3	132-6598	1	CUP-BEARING
4	1F-2771	2	BALL BEARING
7	5P-6254	10	BEARING
12	8D-2256	1	CONE-BEARING
13	9K-1171	1	CUP-BEARING
15	4K-3892	4	DOWEL
17	7X-7816	1	PLATE-SERIAL NUMBER (TRANSMISSION)
	-----	2	TACK
18	8C-5224	3	PLUG-SEAL
19	8E-8310	10	DISC-THRUST
21	8E-8652	1	DISC-THRUST
23	111-7068	1	SHAFT AS
	2A-3746	1	PLUG-CUP
25	-----	1	TUBE
26	174-9381	4	SHAFT-PLANETARY
28	174-9407	1	SUPPORT
29	174-9410	1	CARRIER-PLANETARY
30	176-1377	4	PIN-SPRING
31	179-9006	1	GEAR-SUN (15-TEETH)
38	180-4502	2	DISC-FRICTION
39	180-4505	1	PLATE
40	180-8428	1	SUPPORT AS
	2A-3746	4	PLUG-CUP
41	183-3411	1	SHAFT-BEVEL GEAR
42	183-3413	1	GEAR (18-TEETH)
43	183-3414	1	GEAR (54-TEETH)
46	184-1693	1	RING-RETAINING
47	184-1694	1	RING-RETAINING
48	184-1695	1	SEAL-RING
49	184-1696	1	DISC-THRUST
53	186-2867	1	GEAR-BEVEL (48-TEETH)
55	186-2869	2	SHIM PACK (INCLUDES 14-SHIMS)
56	235-6166	1	COUPLING
69	188-0635	1	SEAL-BRAKE
70	189-2089	1	RING-LOCK
77	192-5602	2	SLEEVE
81	199-7107	4	SPRING
82	207-5993	1	SCREEN
83	207-7007	1	HOUSING
84	210-8405	4	BUSHING
85	210-8406	4	PLATE-SPRING
86	221-5334	1	PLATE-REACTION
87	211-8280	1	PISTON-BRAKE
88	242-5086	1	HOUSING AS
	126-7260	1	PLUG
89	213-3269	1	HUB-BRAKE

CONTINUED

[A] 185-3955, 185-3956, 185-3957 AXLE AR

180-4376 DIFFERENTIAL GP-STEERING

S/N: AZG1013-UP; AZH1005-UP; AZJ1897-UP

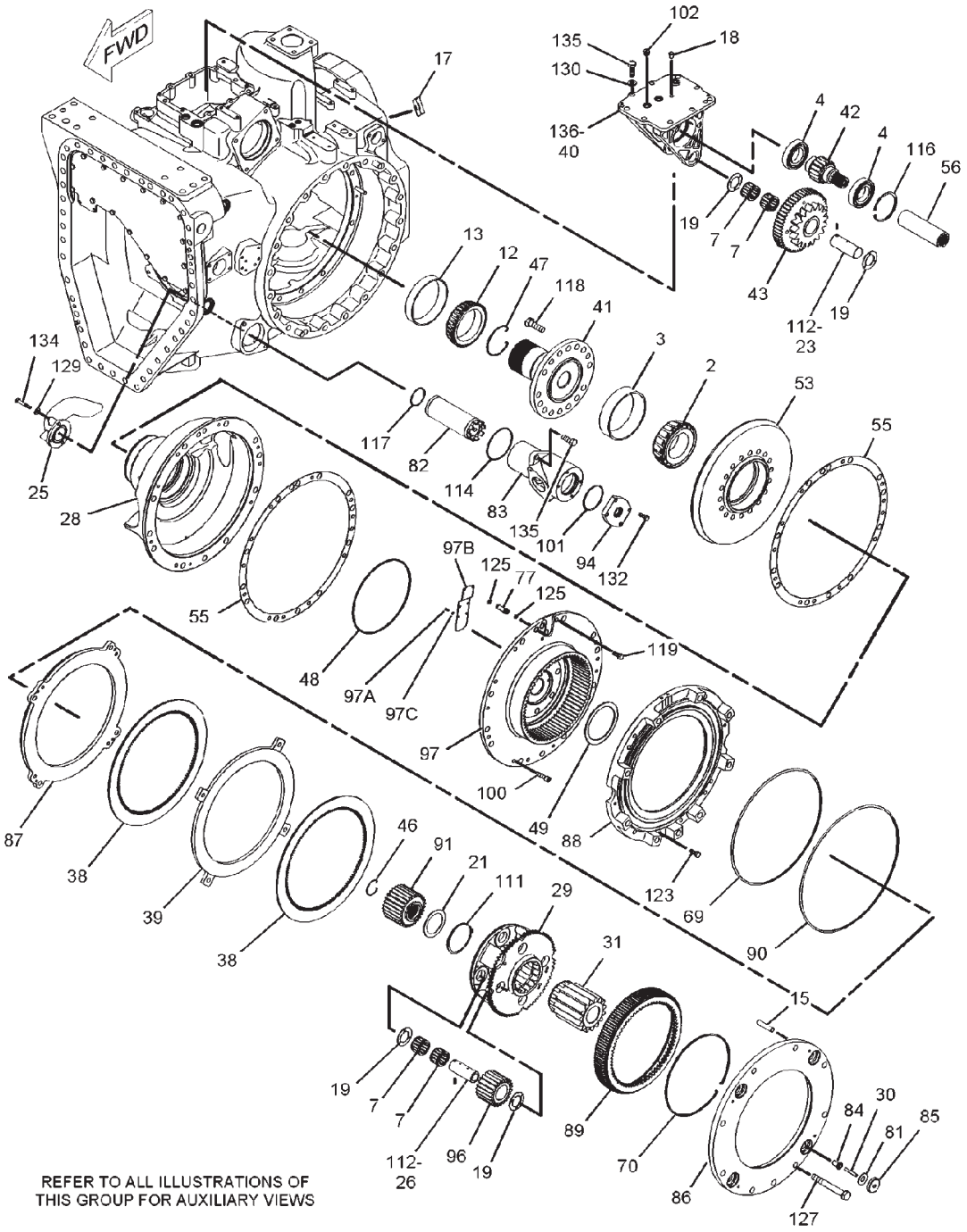

REFER TO ALL ILLUSTRATIONS OF
THIS GROUP FOR AUXILIARY VIEWS

01125322

180-4376 DIFFERENTIAL GP-STEERING

S/N: AZG1013-UP; AZH1005-UP; AZJ1897-UP

ITEM	NUMBER	QTY	DESCRIPTION
-	180-4376	--	DIFFERENTIAL GP-STEERING [A] (NOT SERVICED)
90	213-3270	1	SEAL-D-RING
91	213-6190	1	GEAR-SUN (28-TEETH)
94	221-0691	1	COVER
96	222-1904	4	GEAR-PLANETARY (23-TEETH)
97	252-2227	1	GEAR AS-RING
97A	8T-0285	6	SCREW-MACHINE (M4X0.7X12-MM)
97B	244-3699	1	PLATE
97C	096-6166	6	WASHER-HARD (4.5X9X1-MM THK)
100	095-0670	3	BOLT (M12X1.75X45-MM)
101	131-3718	1	SEAL-O-RING
102	9S-8005	1	PLUG
	3K-0360	1	SEAL-O-RING
	2M-9780	1	SEAL-O-RING
111	3P-3441	1	RING-RETAINING
112	3S-2708	5	PIN-SPRING
114	5F-3144	1	SEAL-O-RING
116	5L-4751	1	RING-RETAINING
117	5M-6509	1	SEAL-O-RING
118	6V-3532	16	BOLT (M20X2.5X60-MM)
119	6V-3668	6	BOLT (M12X1.75X30-MM)
123	6V-8675	1	BOLT (M12X1.75X35-MM)
125	8L-2777	4	SEAL-O-RING
127	8T-0657	9	BOLT (M20X2.5X160-MM)
129	8T-4121	3	WASHER-HARD (11X21X2.5-MM THK)
130	8T-4122	9	WASHER-HARD (17X32X3.5-MM THK)
132	8T-4195	4	BOLT (M10X1.5X30-MM)
134	8T-6466	3	BOLT (M10X1.5X60-MM)
135	8T-7338	11	BOLT (M16X2X45-MM)
136	1U-8846	AR	SEALANT-GASKET

[A] 185-3955, 185-3956, 185-3957 AXLE AR

01125322
PR: t05i29k58b0208

180-4376 DIFFERENTIAL GP-STEERING

S/N: AZG1013-UP; AZH1005-UP; AZJ1897-UP

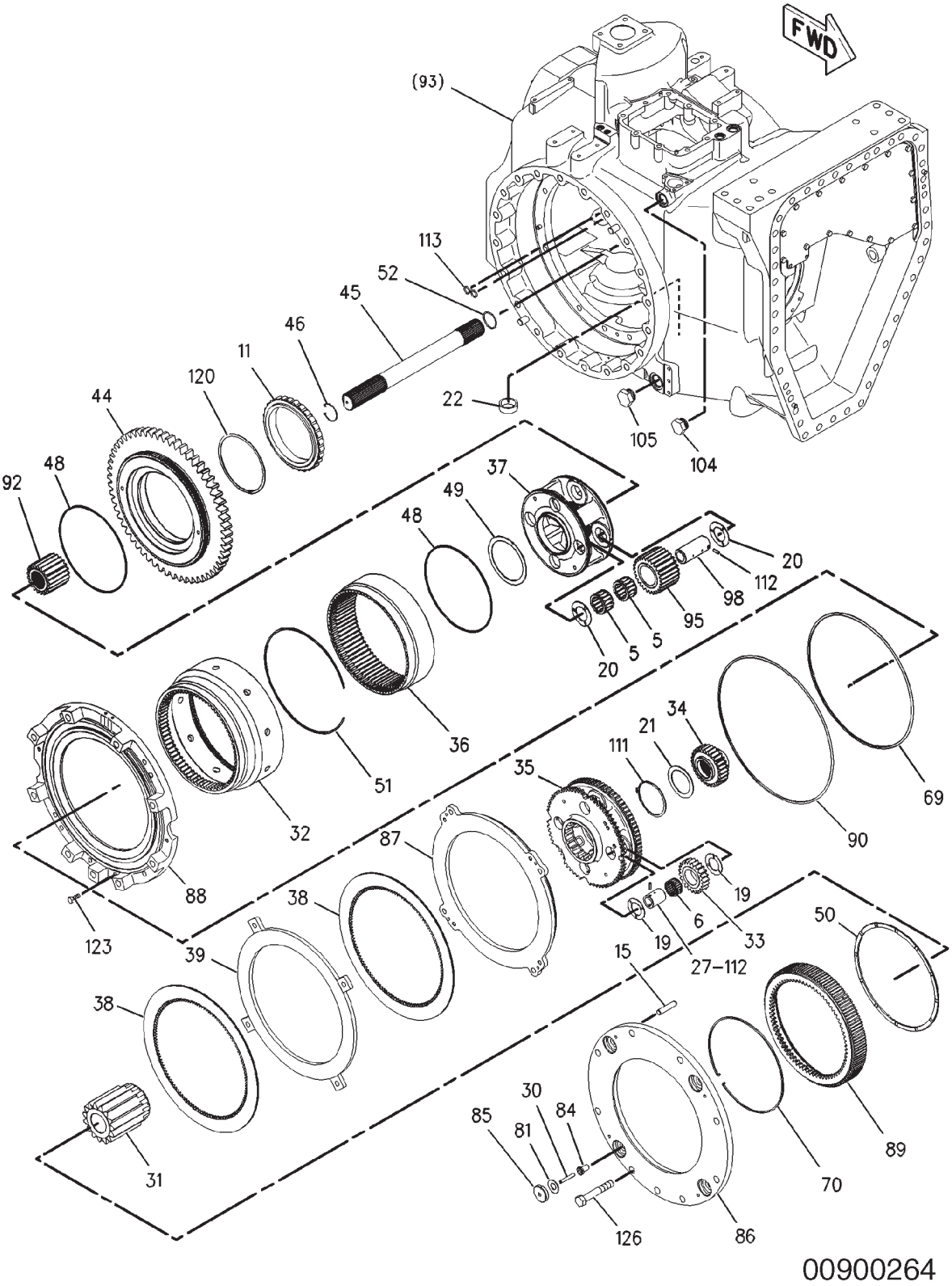

00900264

180-4376 DIFFERENTIAL GP-STEERING

S/N: AZG1013-UP; AZH1005-UP; AZJ1897-UP

ITEM	NUMBER	QTY	DESCRIPTION
-	180-4376	--	DIFFERENTIAL GP-STEERING [A] (NOT SERVICED)
5	1P-3958	8	ROLLER AS-SPECIAL
6	5M-0578	4	BEARING AS-ROLLER
11	6V-6654	1	BEARING AS-ROLLER
15	4K-3892	4	DOWEL
19	8E-8310	8	DISC-THRUST
20	8E-8316	8	DISC-THRUST
21	8E-8652	1	DISC-THRUST
22	8M-7160	1	MAGNET
27	174-9383	4	SHAFT-PLANETARY
30	176-1377	4	PIN-SPRING
31	179-9006	1	GEAR-SUN (15-TEETH)
32	239-9822	1	GEAR-RING (72-TEETH)
33	180-4379	4	GEAR-PLANETARY (23-TEETH)
34	180-4381	1	GEAR-SUN (28-TEETH)
35	180-4382	1	CARRIER-PLANETARY
36	180-4384	1	GEAR-RING (75-TEETH)
37	180-4387	1	CARRIER-PLANETARY
38	180-4502	2	DISC-FRICTION
39	180-4505	1	PLATE
44	183-3415	1	GEAR (58-TEETH)
45	183-3416	1	SHAFT
46	184-1693	1	RING-RETAINING
48	184-1695	2	SEAL-RING
49	184-1696	1	DISC-THRUST
50	184-1697	1	DISC-THRUST
51	185-4422	1	RING-LOCK
52	185-4423	1	RING-RETAINING
69	188-0635	1	SEAL-BRAKE
70	189-2089	1	RING-LOCK
81	199-7107	4	SPRING
84	210-8405	4	BUSHING
85	210-8406	4	PLATE-SPRING
86	221-5334	1	PLATE-REACTION
87	211-8280	1	PISTON-BRAKE
88	242-5086	1	HOUSING AS
	126-7260	1	PLUG
89	213-3269	1	HUB-BRAKE
90	213-3270	1	SEAL-D-RING
92	213-6191	1	GEAR-SUN (34-TEETH)
95	222-1903	4	GEAR-PLANETARY (27-TEETH)
98	223-0623	4	SHAFT-PLANETARY
	2M-9780	1	SEAL-O-RING
104	9S-4181	1	PLUG
	7M-8485	1	SEAL-O-RING
105	9S-6130	1	PLUG
	2S-4078	1	SEAL-O-RING
111	3P-3441	1	RING-RETAINING
112	3S-2708	8	PIN-SPRING
113	4J-5140	2	SEAL-O-RING
120	6V-4442	1	RING-RETAINING
123	6V-8675	1	BOLT (M12X1.75X35-MM)
126	8T-0070	9	BOLT (M20X2.5X120-MM)

[A] 185-3955, 185-3956, 185-3957 AXLE AR

00900264
PR: t05i29k58b0209

177-5234 DRIVE GP-PUMP
S/N: 9YY1-UP

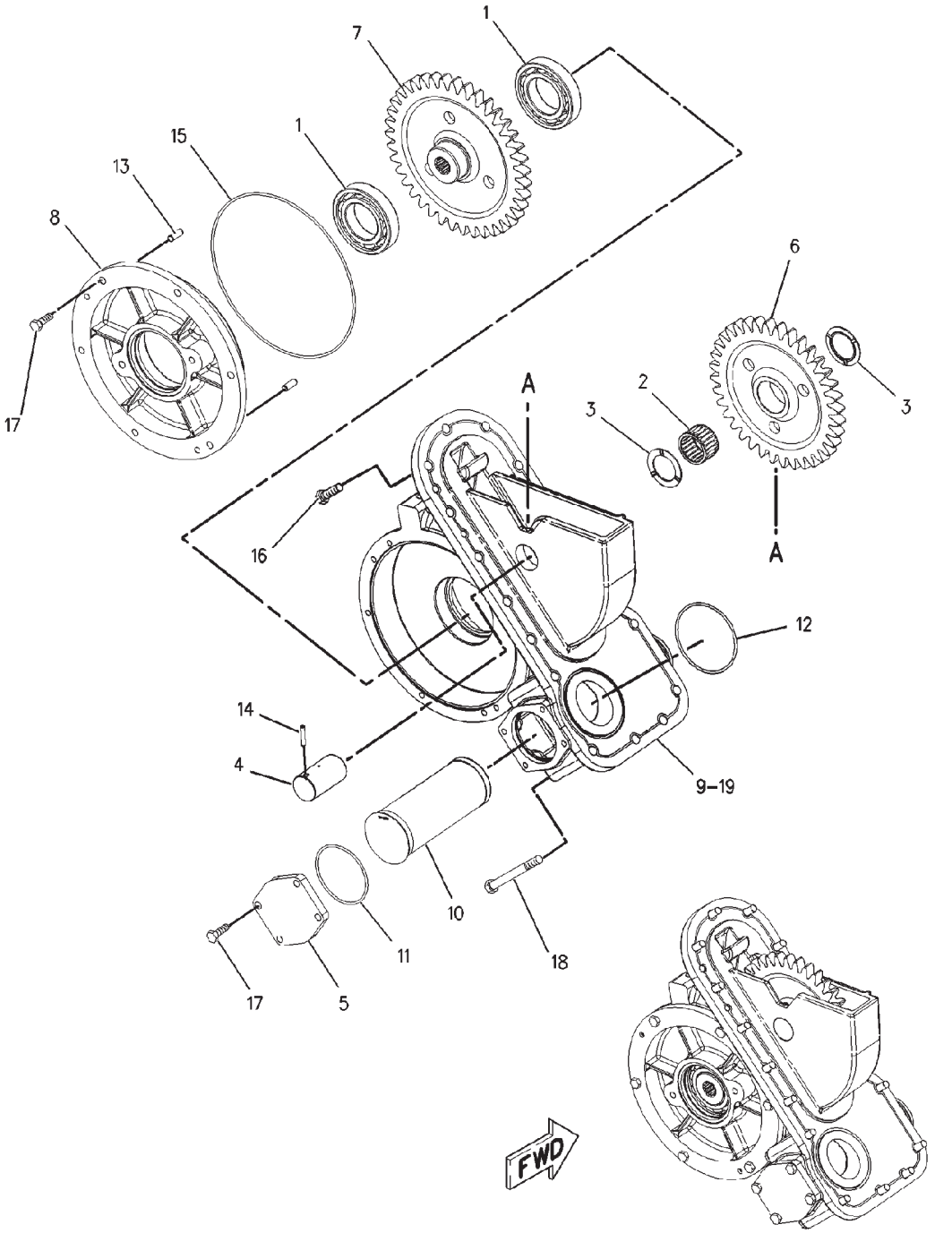

00872185

177-5234 DRIVE GP-PUMP
S/N: 9YY1-UP

ITEM	NUMBER	QTY	DESCRIPTION
-	177-5234	--	DRIVE GP-PUMP [A] (NOT SERVICED)
1	1F-2771	2	BALL BEARING
2	5M-2051	1	BEARING-CAGED
3	6Y-1223	2	DISC-THRUST
4	8P-7898	1	SHAFT-PLANETARY
5	170-7290	1	COVER
6	177-6781	1	GEAR (36-TEETH)
7	177-6782	1	GEAR (39-TEETH)
8	177-6783	1	COVER
9	177-6784	1	HOUSING
10	207-5994	1	SCREEN (PUMP DRIVE INLET)
11	131-3718	1	SEAL-O-RING
12	4M-0189	1	SEAL-O-RING
13	5B-5821	2	DOWEL
14	5H-3193	1	PIN-SPRING
15	8J-8879	1	SEAL-O-RING
16	8T-4183	15	BOLT (M12X1.75X40-MM)
17	8T-4195	10	BOLT (M10X1.5X30-MM)
18	8T-5041	2	BOLT (M12X1.75X120-MM)
19	1U-8846	AR	SEALANT-GASKET

[A] PART OF 152-5242 TRANSMISSION AR

00872185
PR: t05i29k58b0210

211-8277 FASTENER GP-FINAL DRIVE

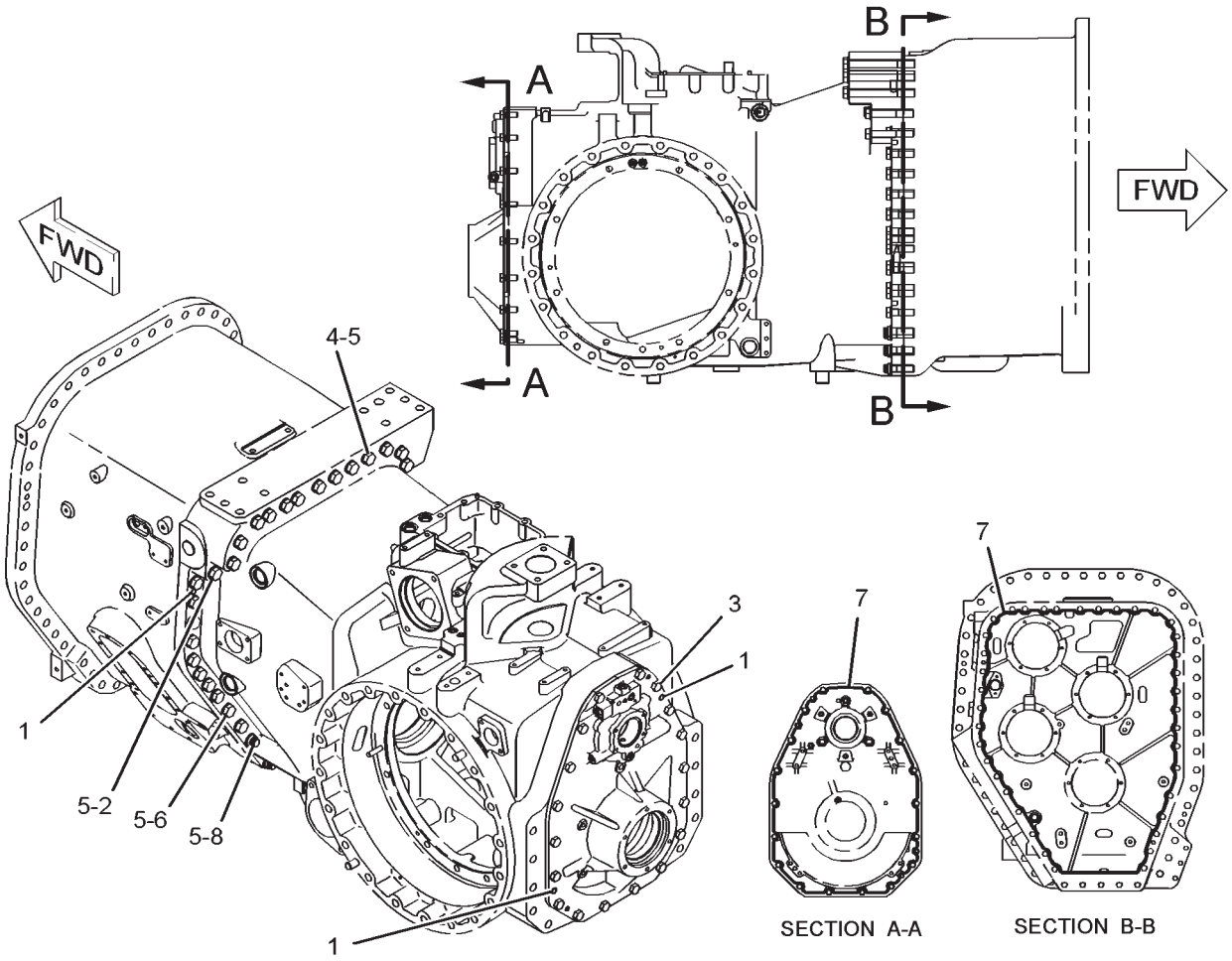

01118299

211-8277 FASTENER GP-FINAL DRIVE

ITEM	NUMBER	QTY	DESCRIPTION
-	211-8277	--	FASTENER GP-FINAL DRIVE [A] (NOT SERVICED)
1	8C-5224	4	PLUG-SEAL
2	7X-2532	3	BOLT (M20X2.5X130-MM)
3	7X-2553	18	BOLT (M16X2X40-MM)
4	7X-2569	13	BOLT (M20X2.5X200-MM)
5	8T-4123	43	WASHER-PLATED (22X35X3.5-MM THK)
6	8T-4141	18	BOLT (M20X2.5X70-MM)
7	1U-8846	AR	SEALANT-GASKET
8	121-3120	9	BOLT-12 POINT HEAD (M20X2.5X70-MM)

[A] PART OF 200-5027, 200-5028, 200-5029, 200-5030 POWER TRAIN AR

01118299
PR: t05i29k58b0211

179-9479 FINAL DRIVE GP

S/N: AZG1-955; AZJ1-1479

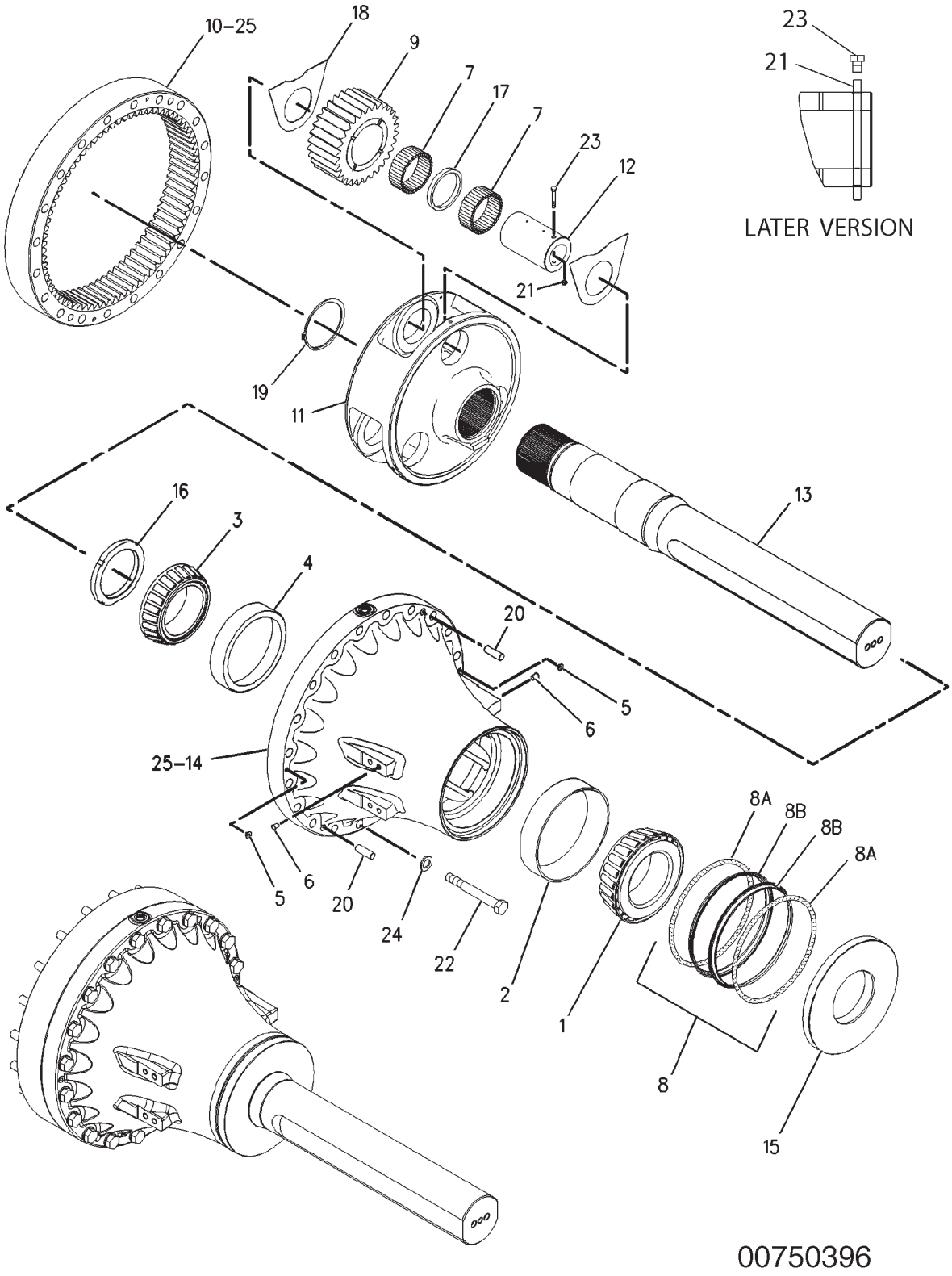

179-9479 FINAL DRIVE GP

S/N: AZG1-955; AZJ1-1479

ITEM	NUMBER	QTY	DESCRIPTION
-	179-9479	--	FINAL DRIVE GP [A] (NOT SERVICED)
1	193-0362	1	CONE-BEARING
2	193-0363	1	CUP-BEARING
3	1B-6577	1	CONE-BEARING
4	2J-2152	1	CUP-BEARING
5	7C-6467	2	PLUG
6	8C-5224	8	PLUG-SEAL
7	261-2719	228	BEARING-NEEDLE
8	174-4874	1	SEAL GP-DUO-CONE
8A	-----	2	RING-TORIC [Z]
8B	-----	2	SEAL-RING [Z]
9	179-9007	3	GEAR-PLANETARY (30-TEETH)
10	217-8425	1	GEAR-RING (78-TEETH)
11	260-9471	1	CARRIER-PLANETARY
12	179-9471	3	SHAFT-PLANETARY
13	194-7019	1	SHAFT-AXLE
14	179-9476	1	HOUSING-AXLE
15	179-9477	1	SPACER (160X350X36-MM THK)
16	179-9478	1	NUT-BEARING
17	179-9488	3	RACE-THRUST
18	216-8715	6	WASHER-THRUST
19	109-6497	1	RING-RETAINING
20	175-3097	2	DOWEL
21	6V-9189	3	LOCKNUT (M8X1.25) (EARLY VERSION)
21	266-0216	3	PIN (M8.5X135) (LATER VERSION)
22	7X-2578	20	BOLT (M24X3X200-MM)
23	8T-0100	3	BOLT (M8X1.25X60-MM) (EARLY VERSION)
23	6V-8084	3	BOLT (M10X1.5X12) (LATER VERSION)
24	8T-4167	20	WASHER-HARD (26X44X4-MM THK)
25	1U-8846	AR	SEALANT-GASKET

[A] PART OF 185-3955, 185-3957 AXLE AR
[Z] NOT SERVICED SEPARATELY

00750396
PR: t05i29k58b0212

179-9479 FINAL DRIVE GP

S/N: AZG956-UP; AZJ1480-UP

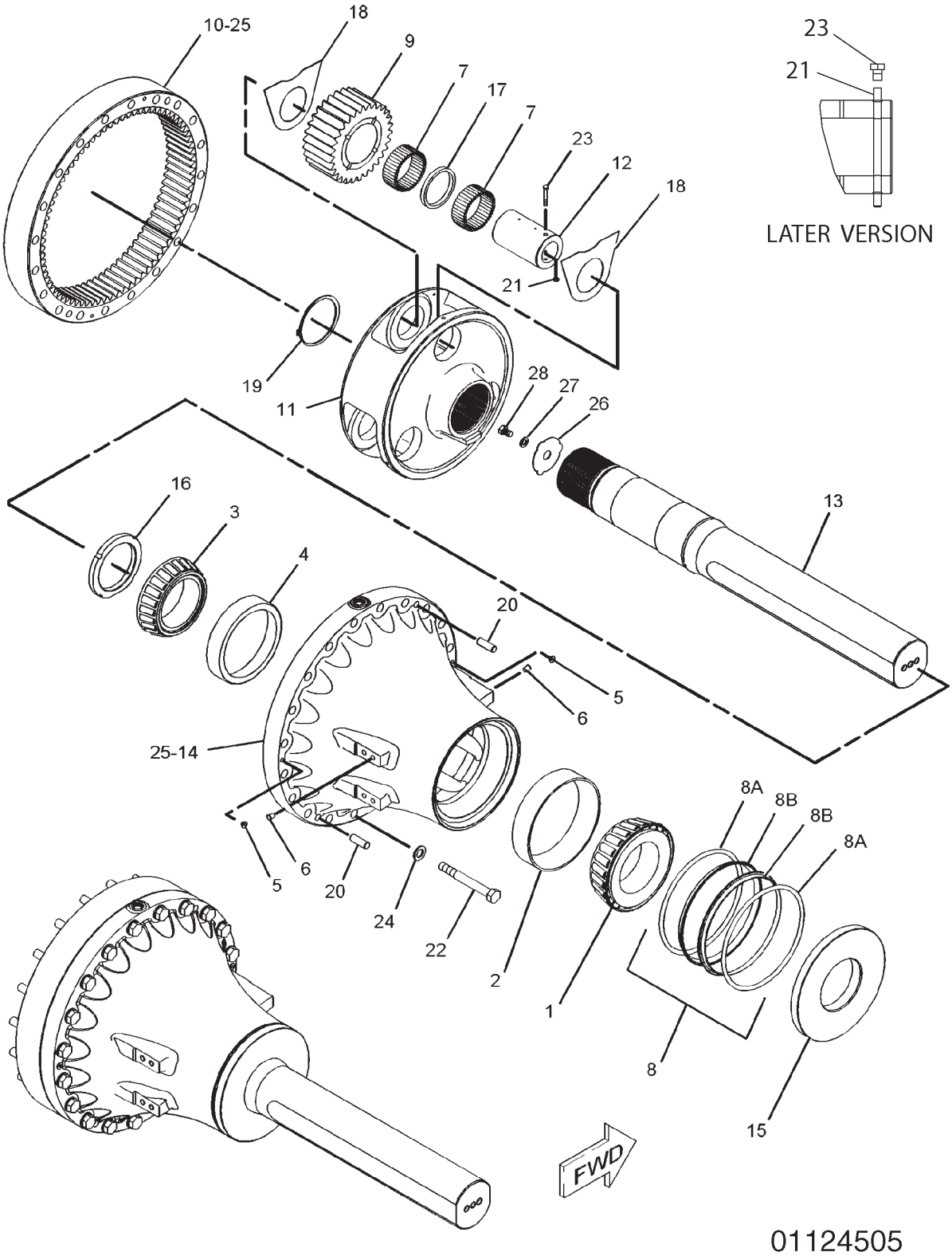

179-9479 FINAL DRIVE GP
S/N: AZG956-UP; AZJ1480-UP

ITEM	NUMBER	QTY	DESCRIPTION
-	179-9479	--	FINAL DRIVE GP [A] (NOT SERVICED)
1	193-0362	1	CONE-BEARING
2	193-0363	1	CUP-BEARING
3	1B-6577	1	CONE-BEARING
4	2J-2152	1	CUP-BEARING
5	7C-6467	2	PLUG
6	8C-5224	8	PLUG-SEAL
7	261-2719	228	BEARING-NEEDLE
8	174-4874	1	SEAL GP-DUO-CONE
8A	-----	2	RING-TORIC [Z]
8B	-----	2	SEAL-RING [Z]
9	179-9007	3	GEAR-PLANETARY (30-TEETH)
10	217-8425	1	GEAR-RING (78-TEETH)
11	260-9471	1	CARRIER-PLANETARY
12	179-9471	3	SHAFT-PLANETARY
13	224-5868	1	SHAFT-AXLE
14	179-9476	1	HOUSING-AXLE
15	179-9477	1	SPACER (160X350X36-MM THK)
16	179-9478	1	NUT-BEARING
17	179-9488	3	RACE-THRUST
18	216-8715	6	WASHER-THRUST
19	109-6497	1	RING-RETAINING
20	175-3097	2	DOWEL
21	6V-9189	3	LOCKNUT (M8X1.25) (EARLY VERSION)
21	266-0216	3	PIN (M8.5X135) (LATER VERSION)
22	7X-2578	20	BOLT (M24X3X200-MM)
23	8T-0100	3	BOLT (M8X1.25X60-MM) (EARLY VERSION)
23	6V-8084	3	BOLT (M10X1.5X12) (LATER VERSION)
24	8T-4167	20	WASHER-HARD (26X44X4-MM THK)
25	1U-8846	AR	SEALANT-GASKET
26	224-5870	1	WASHER-THRUST
27	9X-8268	1	WASHER (17.5X30X3.5-MM THK)
28	6V-5224	1	BOLT (M16X2X25-MM)

[A] PART OF 185-3955, 185-3957 AXLE AR
[Z] NOT SERVICED SEPARATELY

01124505
PR: t05i29k58b0213

179-9480 FINAL DRIVE GP

S/N: AZH1-990; AZK1-987
2286-2600MM (90-102 IN) GAUGE

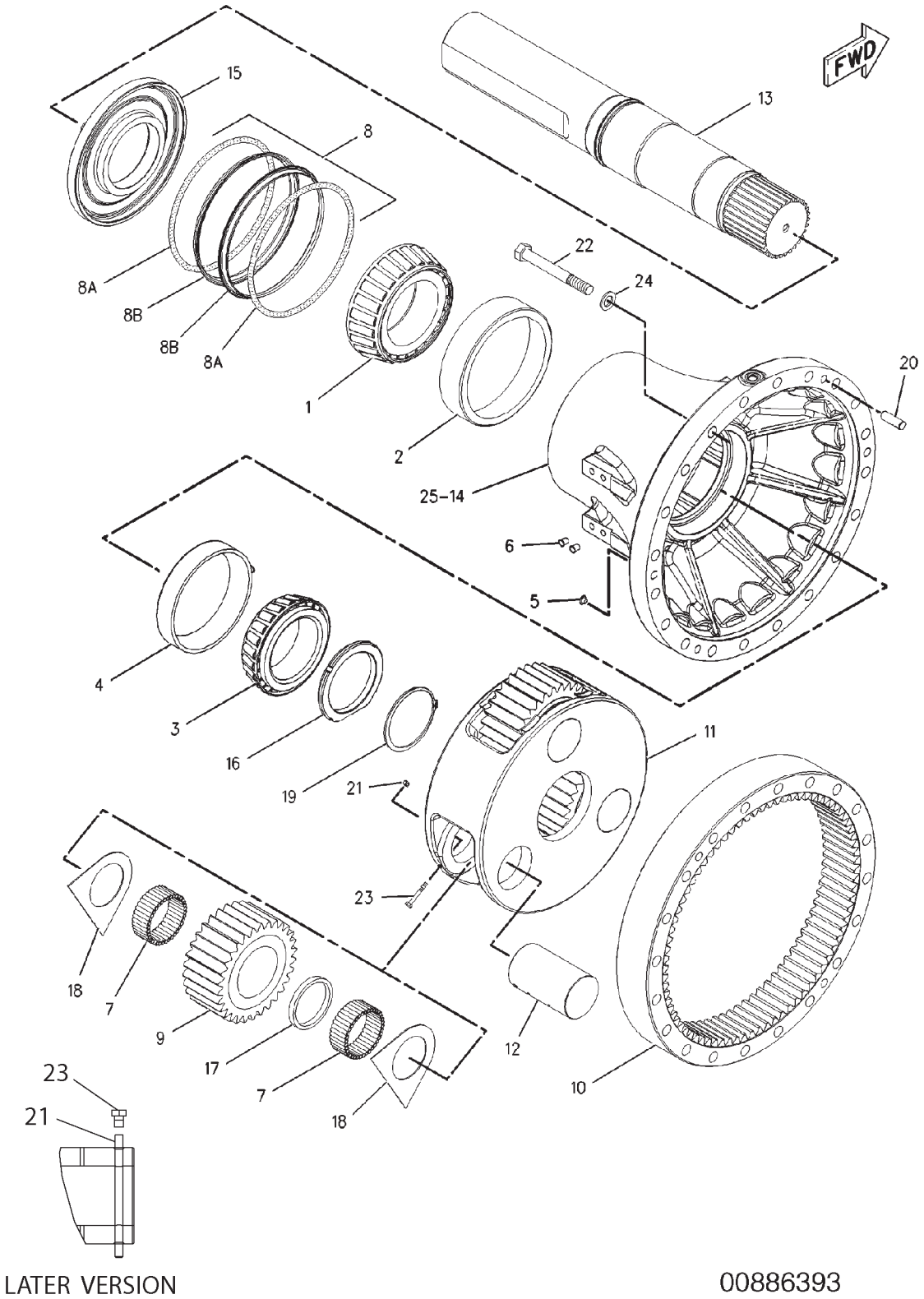

179-9480 FINAL DRIVE GP

S/N: AZH1-990; AZK1-987
2286-2600MM (90-102 IN) GAUGE

ITEM	NUMBER	QTY	DESCRIPTION
-	179-9480	--	FINAL DRIVE GP
			(NOT SERVICED)
1	193-0362	1	CONE-BEARING
2	193-0363	1	CUP-BEARING
3	1B-6577	1	CONE-BEARING
4	2J-2152	1	CUP-BEARING
5	7C-6467	2	PLUG
6	8C-5224	8	PLUG-SEAL
7	261-2719	228	BEARING-NEEDLE
8	174-4874	1	SEAL GP-DUO-CONE
8A	174-4875	2	RING-TORIC
8B	-----	2	SEAL-RING [Z]
9	179-9007	3	GEAR-PLANETARY (30-TEETH)
10	217-8425	1	GEAR-RING (78-TEETH)
11	260-9471	1	CARRIER-PLANETARY
12	179-9471	3	SHAFT-PLANETARY
13	224-5869	1	SHAFT-AXLE
	224-5870	1	WASHER
	6V-5224	1	BOLT
	9X-8268	1	WASHER
14	179-9476	1	HOUSING-AXLE
15	179-9477	1	SPACER (160X350X36-MM THK)
16	179-9478	1	NUT-BEARING
17	179-9488	3	RACE-THRUST
18	216-8715	6	WASHER-THRUST
19	109-6497	1	RING-RETAINING
20	175-3097	2	DOWEL
21	6V-9189	3	LOCKNUT (M8X1.25) (EARLY VERSION)
21	266-0216	3	PIN (M8.5X135) (LATER VERSION)
22	7X-2578	20	BOLT (M24X3X200-MM)
23	8T-0100	3	BOLT (M8X1.25X60-MM) (EARLY VERSION)
23	6V-8084	3	BOLT (M10X1.5X12) (LATER VERSION)
24	8T-4167	20	WASHER-HARD (26X44X4-MM THK)
25	1U-8846	AR	SEALANT-GASKET

[A] PART OF 185-3956, 185-3958 AXLE AR
[Z] NOT SERVICED SEPARATELY

00886393
PR: t05i29k58b0214

179-9480 FINAL DRIVE GP

S/N: AZH991-UP; AZK988-UP

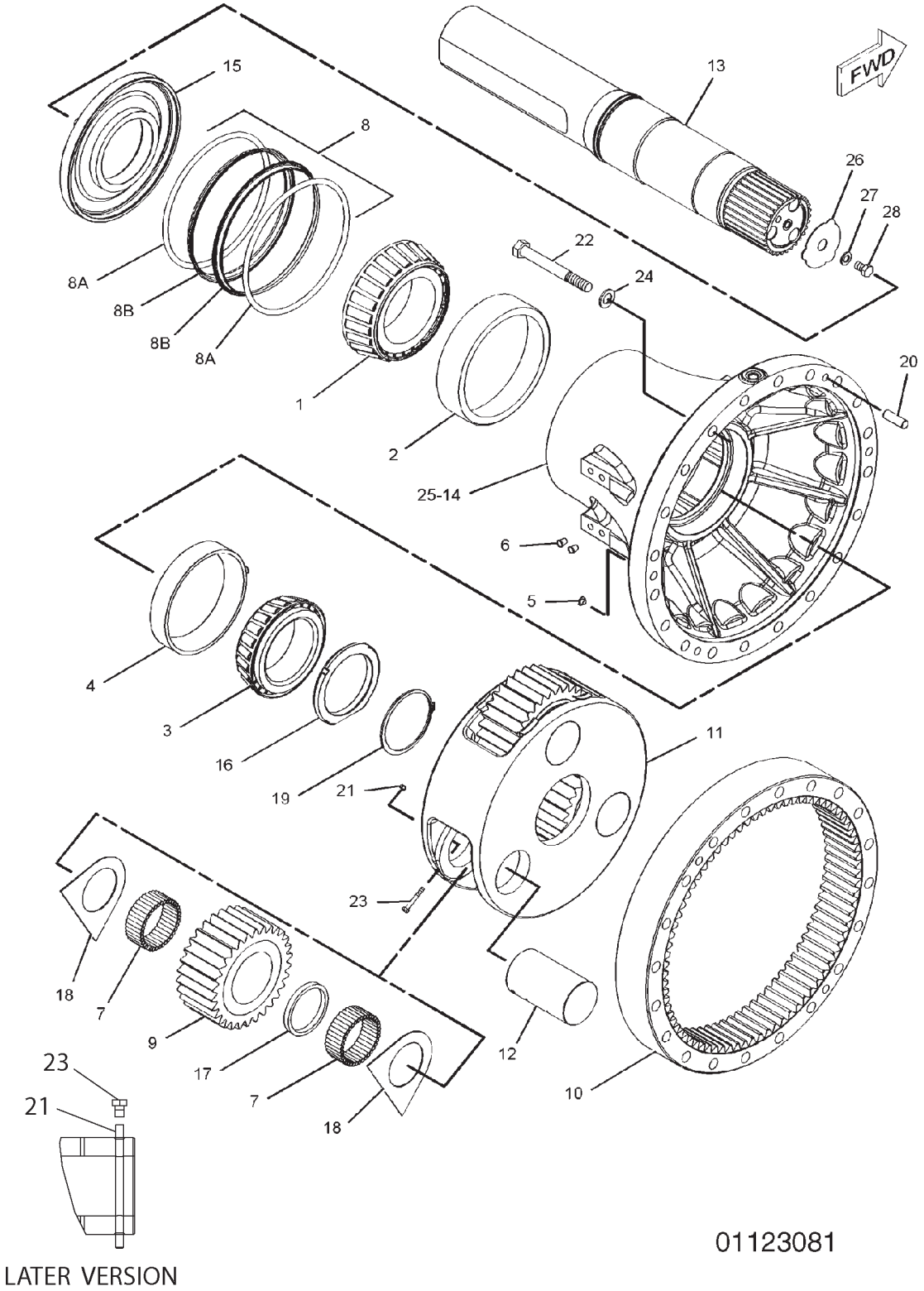

179-9480 FINAL DRIVE GP

S/N: AZH991-UP; AZK988-UP

ITEM	NUMBER	QTY	DESCRIPTION
-	179-9480	--	FINAL DRIVE GP [A] (NOT SERVICED)
1	193-0362	1	CONE-BEARING
2	193-0363	1	CUP-BEARING
3	1B-6577	1	CONE-BEARING
4	2J-2152	1	CUP-BEARING
5	7C-6467	2	PLUG
6	8C-5224	8	PLUG-SEAL
7	261-2719	228	BEARING-NEEDLE
8	174-4874	1	SEAL GP-DUO-CONE
8A	174-4875	2	RING-TORIC
8B	-----	2	SEAL-RING [Z]
9	179-9007	3	GEAR-PLANETARY (30-TEETH)
10	217-8425	1	GEAR-RING (78-TEETH)
11	260-9471	1	CARRIER-PLANETARY
12	179-9471	3	SHAFT-PLANETARY
13	224-5869	1	SHAFT-AXLE
14	179-9476	1	HOUSING-AXLE
15	179-9477	1	SPACER (160X350X36-MM THK)
16	179-9478	1	NUT-BEARING
17	179-9488	3	RACE-THRUST
18	216-8715	6	WASHER-THRUST
19	109-6497	1	RING-RETAINING
20	175-3097	2	DOWEL
21	6V-9189	3	LOCKNUT (M8X1.25) (EARLY VERSION)
21	266-0216	3	PIN (M8.5X135) (LATER VERSION)
22	7X-2578	20	BOLT (M24X3X200-MM)
23	8T-0100	3	BOLT (M8X1.25X60-MM) (EARLY VERSION)
23	6V-8084	3	BOLT (M10X1.5X12) (LATER VERSION)
24	8T-4167	20	WASHER-HARD (26X44X4-MM THK)
25	1U-8846	AR	SEALANT-GASKET
26	224-5870	1	WASHER-THRUST
27	9X-8268	1	WASHER (17.5X30X3.5-MM THK)
28	6V-5224	1	BOLT (M16X2X25-MM)

[A] PART OF 185-3956, 185-3958 AXLE AR
[Z] NOT SERVICED SEPARATELY

01123081
PR: t05i29k58b0215

217-7314 HOUSING GP-DIFFERENTIAL

**S/N: AZG1-906; AZH1-972;
AZJ1-1112; AZK1-968**

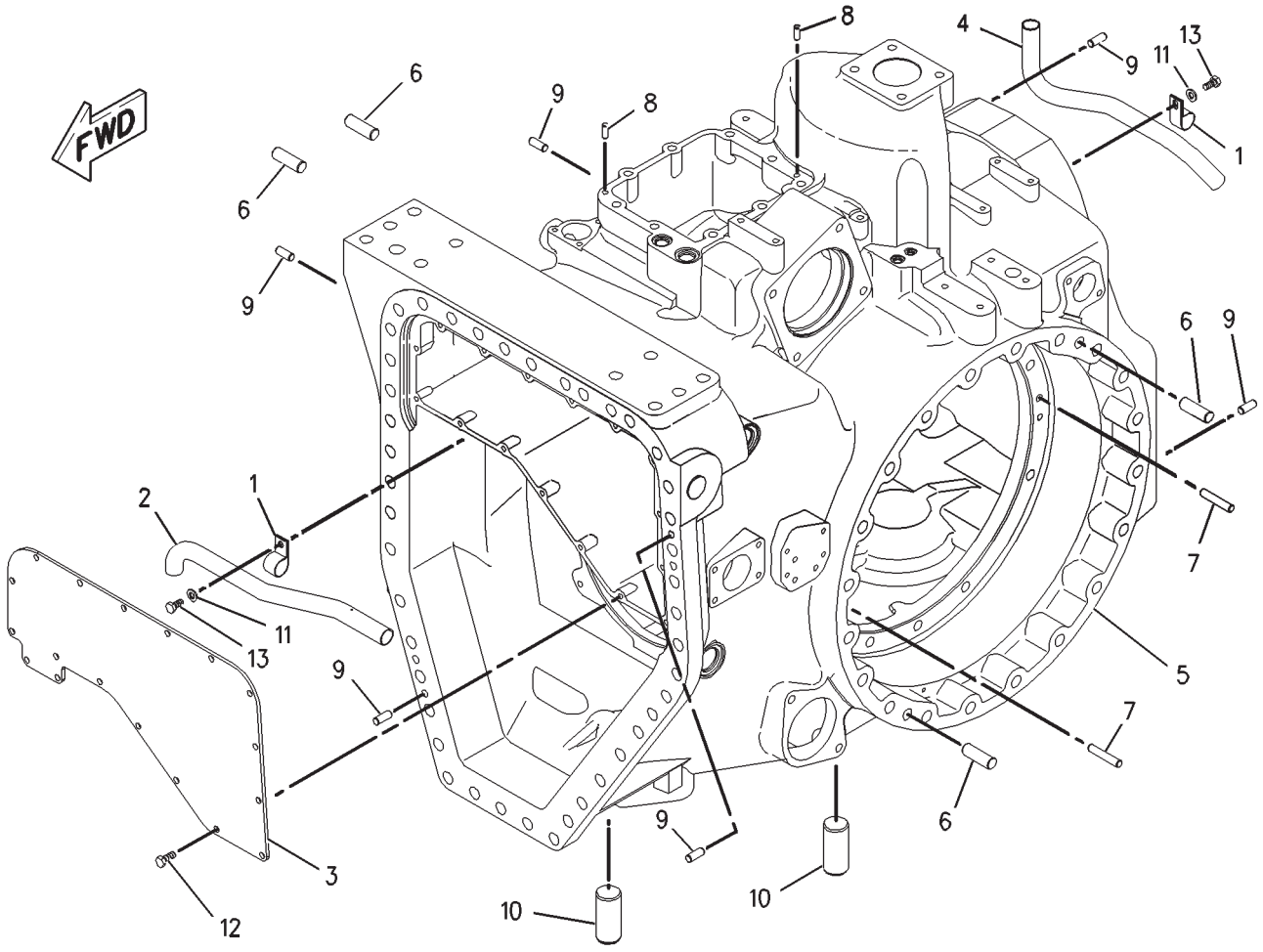

00898342

217-7314 HOUSING GP-DIFFERENTIAL

S/N: AZG1-906; AZH1-972; AZJ1-1112; AZK1-968

ITEM	NUMBER	QTY	DESCRIPTION
-	217-7314	--	HOUSING GP-DIFFERENTIAL [A] (NLA-ORDER 225-6958)
1	134-5645	2	CLIP
2	180-8431	1	TUBE
3	193-0650	1	COVER
4	203-3929	1	TUBE
5	-----	1	HOUSING
6	175-3097	4	DOWEL
7	1A-0646	2	DOWEL
8	5B-5821	2	DOWEL
9	5M-7937	6	DOWEL
10	7X-3396	2	DOWEL
11	8T-4121	2	WASHER-HARD (11X21X2.5-MM THK)
12	8T-4136	16	BOLT (M10X1.5X25-MM)
13	8T-4137	2	BOLT (M10X1.5X20-MM)
			00898342

[A] PART OF 180-4376 DIFFERENTIAL GP

00898342
PR: t05i29k58b0216

225-6958 HOUSING GP-DIFFERENTIAL

**S/N: AZG907-950;AZH973-983;
AZJ1113-1434; AZK968-979**

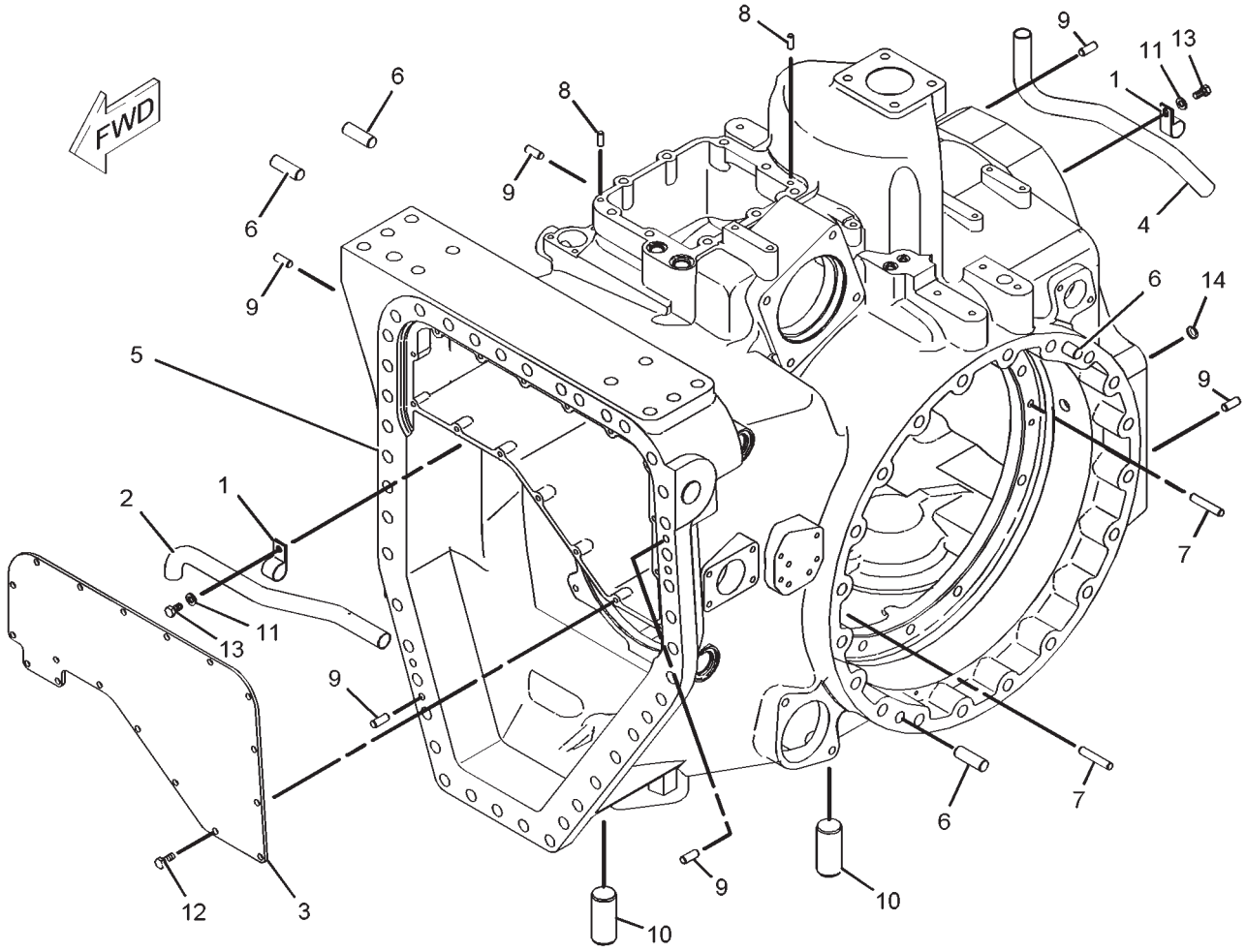

01122771

225-6958 HOUSING GP-DIFFERENTIAL

**S/N: AZG907-950;AZH973-983;
AZJ1113-1434; AZK968-979**

ITEM	NUMBER	QTY	DESCRIPTION
-	225-6958	--	HOUSING GP-DIFFERENTIAL [A] (NOT SERVICED)
1	134-5645	2	CLIP
2	180-8431	1	TUBE
3	193-0650	1	COVER
4	203-3929	1	TUBE
5	-----	1	HOUSING [Z]
6	175-3097	4	DOWEL
7	1A-0646	2	DOWEL
8	5B-5821	2	DOWEL
9	5M-7937	6	DOWEL
10	7X-3396	2	DOWEL
11	8T-4121	2	WASHER-HARD (11X21X2.5-MM THK)
12	8T-4136	16	BOLT (M10X1.5X25-MM)
13	8T-4137	2	BOLT (M10X1.5X20-MM)
14	4N-0952	1	PLUG-CUP

[A] PART OF 180-4376 DIFFERENTIAL GP
[Z] NOT SERVICED SEPARATELY

01122771
PR: t05i29k58b0217

242-0962 HOUSING GP-DIFFERENTIAL

**S/N: AZG951-UP; AZH984-UP;
AZJ1435-UP; AZK980-UP**

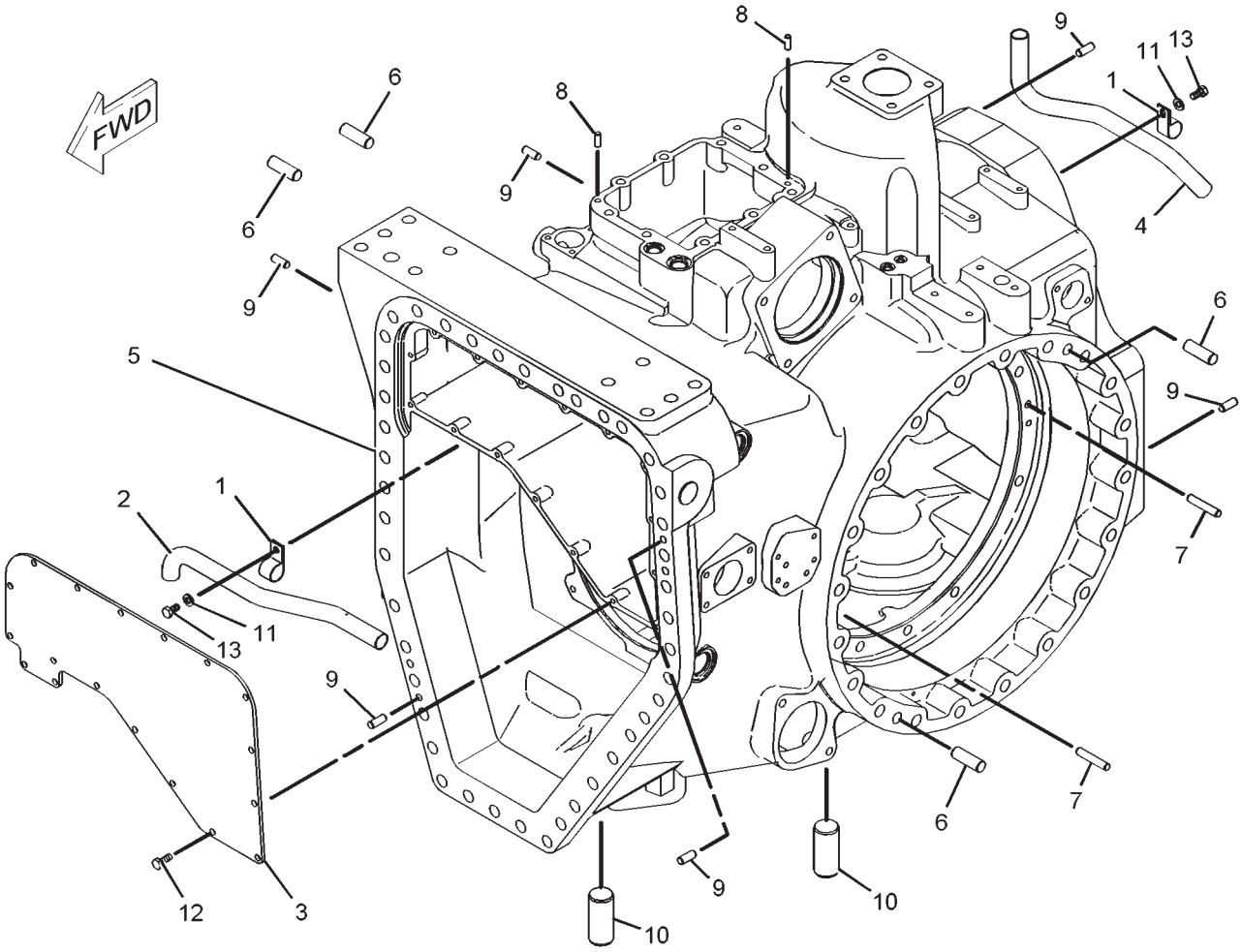

01122772

242-0962 HOUSING GP-DIFFERENTIAL

S/N: AZG951-UP; AZH984-UP; AZJ1435-UP; AZK980-UP

ITEM	NUMBER	QTY	DESCRIPTION
-	242-0962	--	HOUSING GP-DIFFERENTIAL [A]
1	134-5645	2	CLIP
2	180-8431	1	TUBE
3	193-0650	1	COVER
4	203-3929	1	TUBE
5	-----	1	HOUSING [Z]
6	175-3097	4	DOWEL
7	1A-0646	2	DOWEL
8	5B-5821	2	DOWEL
9	5M-7937	6	DOWEL
10	7X-3396	2	DOWEL
11	8T-4121	2	WASHER-HARD (11X21X2.5-MM THK)
12	8T-4136	16	BOLT (M10X1.5X25-MM)
13	8T-4137	2	BOLT (M10X1.5X20-MM)

[A] PART OF 180-4376 DIFFERENTIAL GP
[Z] NOT SERVICED SEPARATELY

01122772
PR: t05i29k58b0218

152-5242 TRANSMISSION AR
S/N: 9YY1-UP

NO ILLUSTRATION

NOTIF

152-5242 TRANSMISSION AR
S/N: 9YY1-UP

ITEM	NUMBER	QTY	DESCRIPTION
-	152-5242	--	TRANSMISSION AR
	155-9579	1	CASE & PARTS GP-PLANETARY 1 (NOT SERVICED) (SEE BREAKDOWN FOR COMPONENTS)
	155-9571	1	CLUTCH GP (INPUT) S/N: 9YY1-1465 (NOT SERVICED) (SEE BREAKDOWN FOR COMPONENTS)
	155-9572	1	CLUTCH GP (INTERMEDIATE) S/N: 9YY1-1465 (NOT SERVICED) (SEE BREAKDOWN FOR COMPONENTS)
	155-9575	1	CLUTCH GP (REVERSE) S/N: 9YY1-1465 (NOT SERVICED) (SEE BREAKDOWN FOR COMPONENTS)
	155-9576	1	CLUTCH GP (OUTPUT) (S/N: 9YY1-1465) (NOT SERVICED) (SEE BREAKDOWN FOR COMPONENTS)
	232-1774	1	CLUTCH GP-TRANSMISSION (S/N: 9YY1466-UP) (NOT SERVICED) (SEE BREAKDOWN FOR COMPONENTS)
	177-5233	2	CLUTCH GP (PLANETARY) (NOT SERVICED) (SEE BREAKDOWN FOR COMPONENTS)
	155-9580	1	CONTROL GP-TRANSMISSION HYD (NOT SERVICED) (SEE BREAKDOWN FOR COMPONENTS)
	177-5234	1	DRIVE GP-PUMP (NOT SERVICED) (SEE BREAKDOWN FOR COMPONENTS)

[A] PART OF 200-5027, 200-5028,
200-5029, 200-5030 POWER TRAIN AR

NOTIF
PR: t05i29k58b0219

198-1013 VALVE GP-RELIEF
S/N: 9YY1-UP

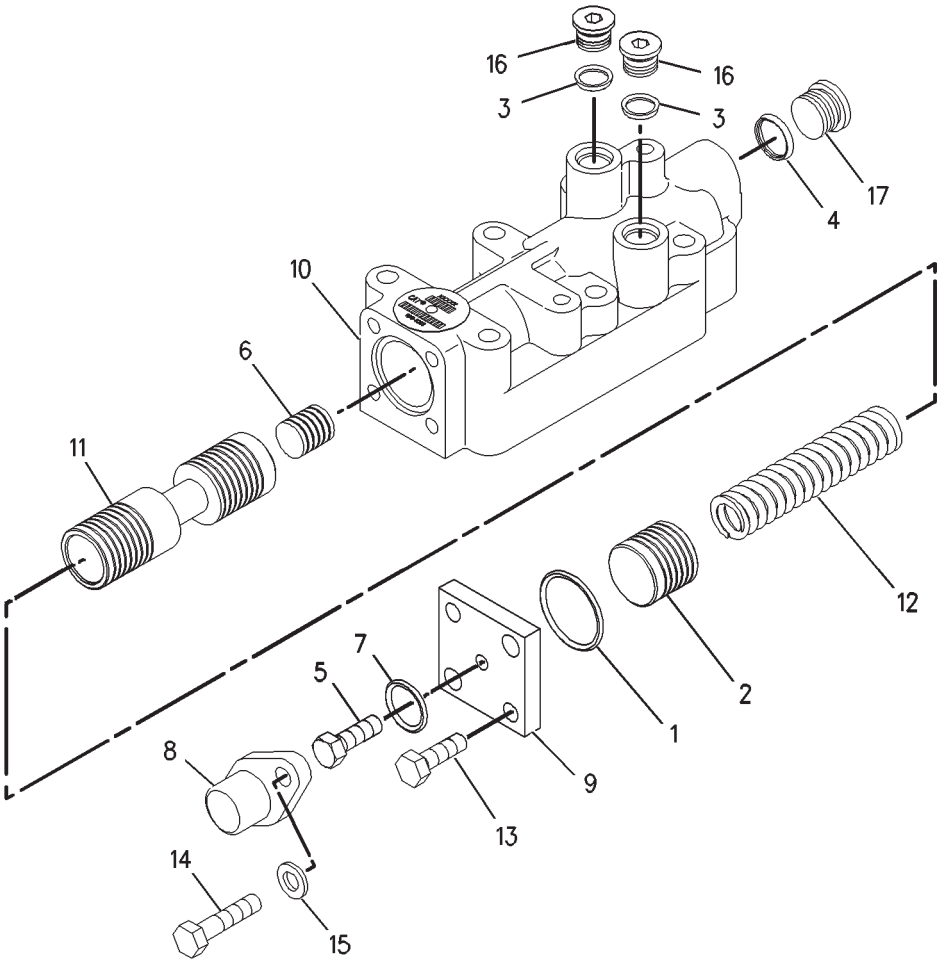

00894902

198-1013 VALVE GP-RELIEF
S/N: 9YY1-UP

ITEM	NUMBER	QTY	DESCRIPTION
-	198-1013	--	VALVE GP-RELIEF [A]
1	2S-4663	1	SEAL-O-RING
2	2S-5835	1	PISTON-LOAD
3	3J-1907	2	SEAL-O-RING
4	3K-0360	1	SEAL-O-RING
5	4M-5905	1	SCREW-ADJUSTMENT (5/16-18X1-IN)
6	8E-1143	1	SLUG
7	8M-5253	1	SEAL-O-RING
8	9M-2110	1	COVER-ADJUSTMENT
9	115-4550	1	COVER
10	172-7966	1	BODY
11	172-7968	1	SPOOL AS
	3D-8317	1	RING-RETAINING
	4B-9880	1	BALL
	4M-2381	1	SPRING
	9U-8669	1	RETAINER
12	174-7449	1	SPRING
13	6V-3940	2	BOLT (M8X1.25X25-MM)
14	6V-5218	2	BOLT (M8X1.25X35-MM)
15	9M-1974	2	WASHER-HARD (8.8X16X2-MM THK)
16	9S-8004	2	PLUG
17	241-6205	1	PLUG

[A] PART OF 155-9580 CONTROL GP
-TRANSMISSION HYD

00894902
PR: t05i29k58b0220

185-3955 AXLE AR-WITH POWER TAKE-OFF

S/N: AZG1-UP
2286-3251 MM (90-128 IN)

NO ILLUSTRATION

NOTIF

185-3955 AXLE AR-WITH POWER TAKE-OFF

S/N: AZG1-UP
2286-3251 MM (90-128 IN)

ITEM	NUMBER	QTY	DESCRIPTION
-	185-3955	--	AXLE AR-WITH POWER TAKE-OFF [A] (NOT SERVICED)
1	179-9479	2	FINAL DRIVE GP (NOT SERVICED) (SEE BREAKDOWN FOR COMPONENTS)
2	180-4376	1	DIFFERENTIAL GP (NOT SERVICED) (SEE BREAKDOWN FOR COMPONENTS)
3	187-4930	1	POWER TAKE-OFF GP (NOT SERVICED) (SEE BREAKDOWN FOR COMPONENTS)

[A] PART OF 200-5027 POWER TRAIN AR

NOTIF
PR: t05i29k58b0221

185-3956 AXLE AR-WITH POWER TAKE-OFF

S/N: AZH1-UP
2286-2600 MM (90-102 IN)

NO ILLUSTRATION

NOTIF

185-3956 AXLE AR-WITH POWER TAKE-OFF

S/N: AZH1-UP
2286-2600 MM (90-102 IN)

ITEM	NUMBER	QTY	DESCRIPTION
-	185-3956	--	AXLE AR-WITH POWER TAKE-OFF [A] (NOT SERVICED)
	180-4376	1	DIFFERENTIAL GP (NOT SERVICED) (SEE BREAKDOWN FOR COMPONENTS)
	179-9480	2	FINAL DRIVE GP (NOT SERVICED) (SEE BREAKDOWN FOR COMPONENTS)
	187-4930	1	POWER TAKE-OFF GP (NOT SERVICED) (SEE BREAKDOWN FOR COMPONENTS)

[A] PART OF 200-5028 POWER TRAIN AR

NOTIF
PR: t05i29k58b0222

185-3957 AXLE AR

S/N: AZJ1-UP
2286-3251 MM (90-128 IN)
CANNOT BE USED WITH POWER TAKE OFF

NO ILLUSTRATION

NOTIF

185-3957 AXLE AR

S/N: AZJ1-UP
2286-3251 MM (90-128 IN)
CANNOT BE USED WITH POWER TAKE OFF

ITEM	NUMBER	QTY	DESCRIPTION
-	185-3957	--	AXLE AR [A] (NOT SERVICED)
	185-8737	1	COVER GP-DIFFERENTIAL (NOT SERVICED) (SEE BREAKDOWN FOR COMPONENTS)
	180-4376	1	DIFFERENTIAL GP (NOT SERVICED) (SEE BREAKDOWN FOR COMPONENTS)
	179-9479	2	FINAL DRIVE GP (NOT SERVICED) (SEE BREAKDOWN FOR COMPONENTS)

[A] PART OF 200-5029 POWER TRAIN AR

NOTIF
PR: t05i29k58b0223

185-3958 AXLE AR-WITHOUT POWER TAKE-OFF

S/N: AZK1-UP
2286-2600 MM (90-102 IN)

NO ILLUSTRATION

NOTIF

185-3958 AXLE AR-WITHOUT POWER TAKE-OFF

S/N: AZK1-UP
2286-2600 MM (90-102 IN)

ITEM	NUMBER	QTY	DESCRIPTION
-	185-3958	--	AXLE AR-WITHOUT POWER TAKE-OFF [A] (NOT SERVICED)
	185-8737	1	COVER GP-DIFFERENTIAL (NOT SERVICED) (SEE BREAKDOWN FOR COMPONENTS)
	180-4376	1	DIFFERENTIAL GP (NOT SERVICED) (SEE BREAKDOWN FOR COMPONENTS)
	179-9480	2	FINAL DRIVE GP (NOT SERVICED) (SEE BREAKDOWN FOR COMPONENTS)

[A] PART OF 200-5030 POWER TRAIN AR

NOTIF
PR: t05i29k58b0224

185-8737 COVER GP-DIFFERENTIAL

S/N: AZJ1-UP; AZK1-UP

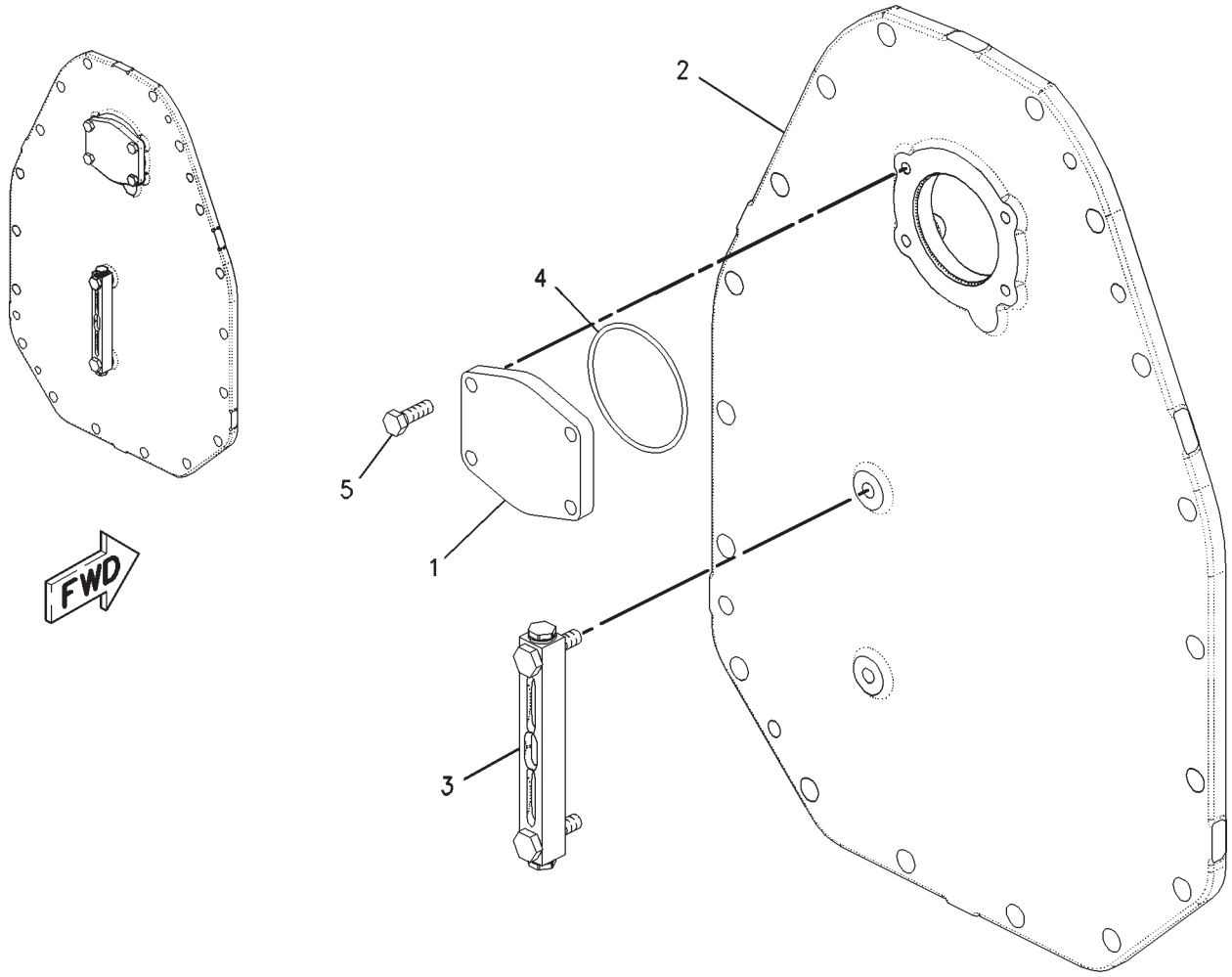

00893383

185-8737 COVER GP-DIFFERENTIAL

S/N: AZJ1-UP; AZK1-UP

ITEM	NUMBER	QTY	DESCRIPTION
-	185-8737	--	COVER GP-DIFFERENTIAL [A] (NOT SERVICED)
1	170-7290	1	COVER
2	217-3555	1	COVER
3	217-3557	1	GAUGE-SIGHT
4	131-3718	1	SEAL-O-RING
5	8T-4195	4	BOLT (M10X1.5X30MM)

[A] PART OF 185-3957, 185-3958 AXLE AR

00893383
PR: t05i29k58b0225

187-4930 POWER TAKE-OFF GP

S/N: AZG1-879; AZH1-959

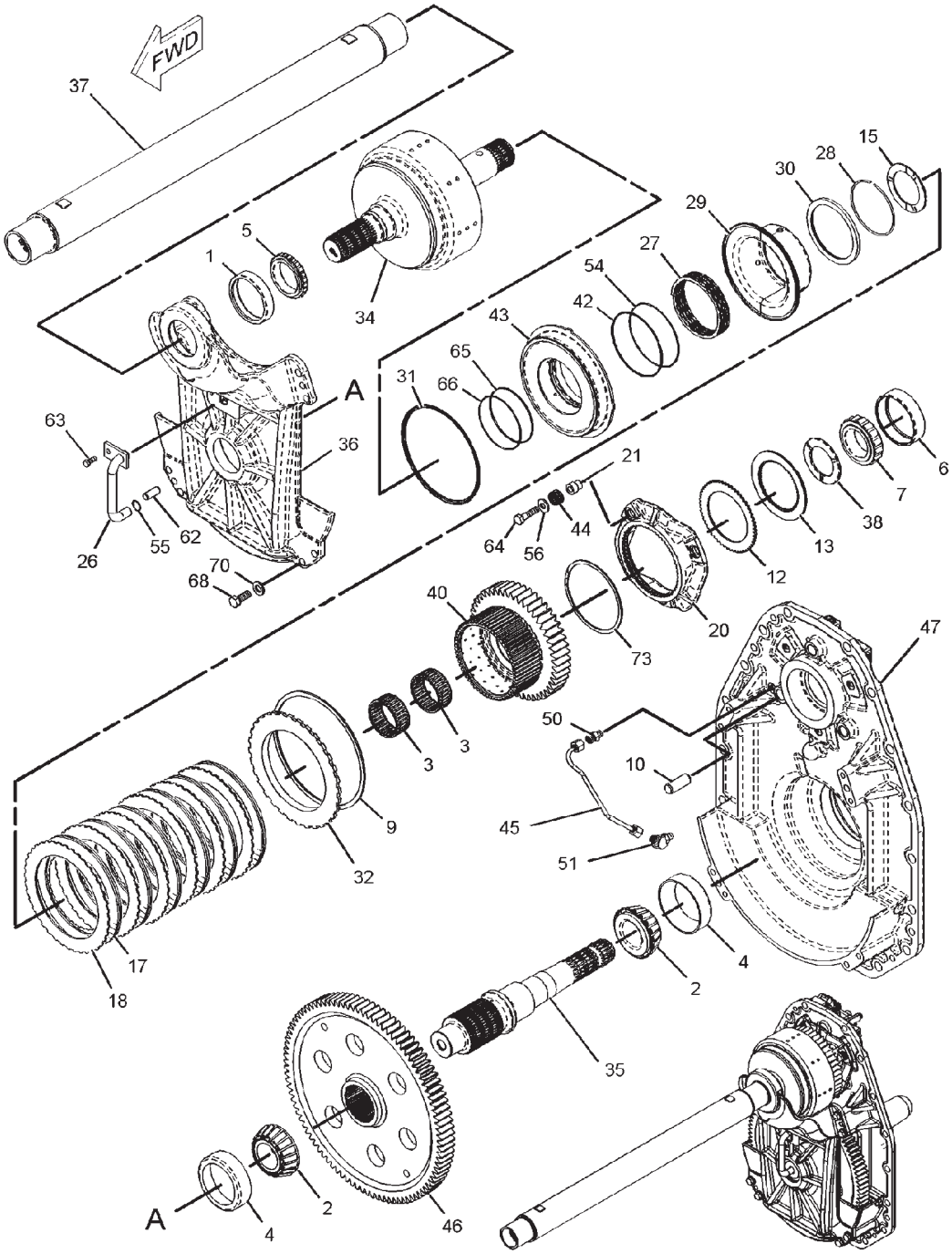

01122766

187-4930 POWER TAKE-OFF GP

S/N: AZG1-879; AZH1-959

ITEM	NUMBER	QTY	DESCRIPTION
-	187-4930	--	POWER TAKE-OFF GP (NOT SERVICED)
1	172-3441	1	RACE-ROLLER BEARING
2	008-3178	2	CONE-BEARING
3	124-0492	2	BEARING-CAGED
4	2D-9190	2	CUP-BEARING
5	6H-7611	1	BEARING-INNER
6	8E-8276	1	RACE-BEARING OUTER
7	8E-8277	1	BEARING-INNER
9	4D-7889	1	RING
10	4T-4200	3	SLUG
12	6Y-5631	1	PLATE-CLUTCH
13	6Y-7968	1	DISC-FRICTION
15	8E-8653	1	DISC-THRUST
17	134-8360	6	DISC-FRICTION
18	134-8361	6	PLATE-CLUTCH
20	161-8739	1	PLATE-BRAKE
21	161-8848	3	BUSHING
26	168-4558	1	TUBE AS
27	173-5392	1	SPRING
28	177-5241	1	RING-RETAINING
29	177-5243	1	SEAL AS
30	177-5246	1	RING-SPACER
31	177-6797	1	RING-SEAL
32	177-6804	1	PLATE-END
34	180-8378	1	SHAFT AS
	7T-9356	1	PLUG-CUP
	9W-0719	1	PLUG
35	180-8382	1	SHAFT
36	180-8385	1	CARRIER-BEARING
37	180-8393	1	SHAFT AS
38	180-8395	1	DISC-THRUST

CONTINUED

[A] PART OF 185-3955, 185-3956 AXLE AR

187-4930 POWER TAKE-OFF GP

S/N: AZG1-879; AZH1-959

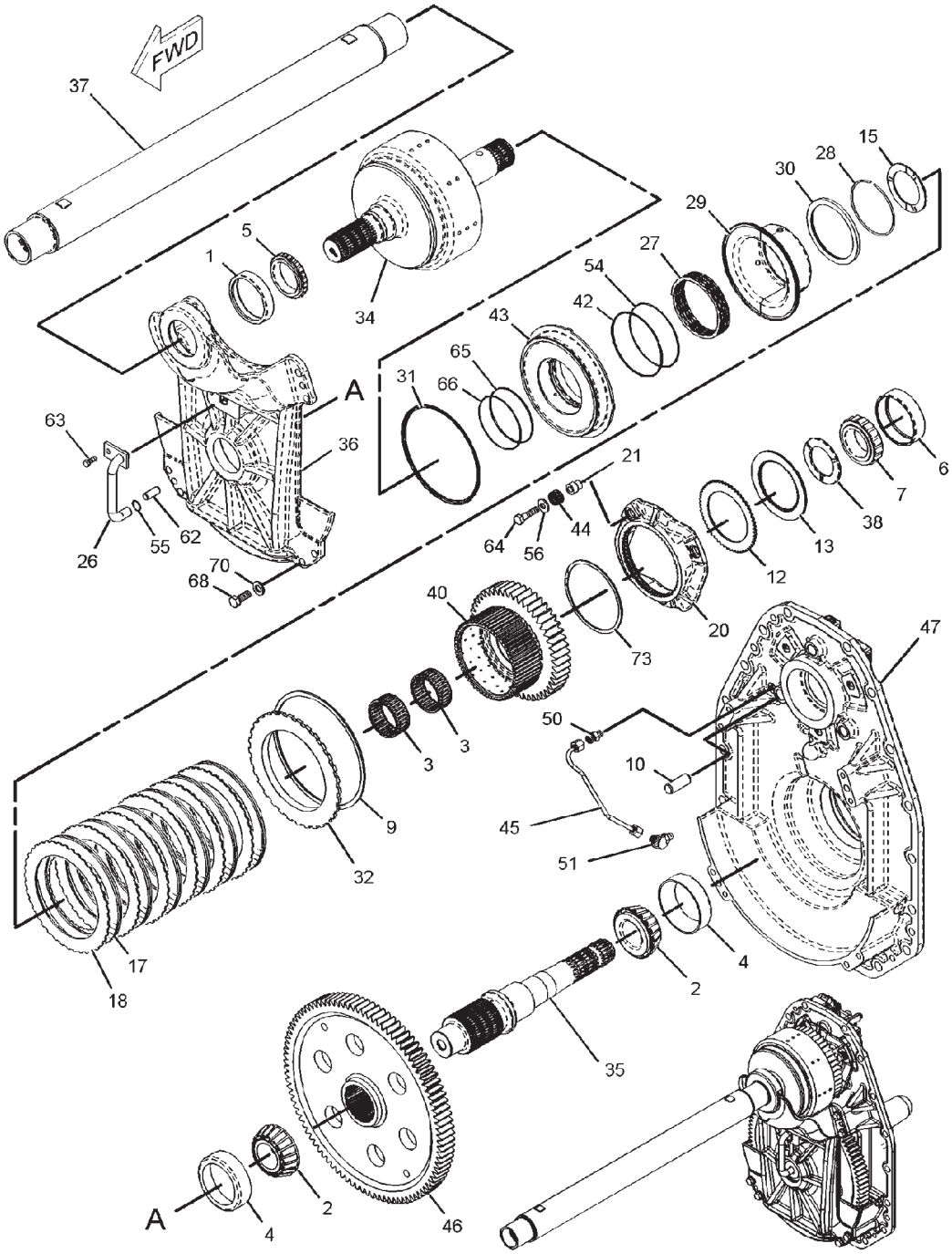

01122766

187-4930 POWER TAKE-OFF GP

S/N: AZG1-879; AZH1-959

ITEM	NUMBER	QTY	DESCRIPTION
-	187-4930	--	POWER TAKE-OFF GP (NOT SERVICED)
40	191-5262	1	GEAR (48-TEETH)
42	200-3039	1	RING-SEAL
43	203-2631	1	PISTON
44	210-1975	3	SPRING
45	211-8276	1	TUBE AS
46	216-9213	1	GEAR (95-TEETH)
47	217-3556	1	COVER
50	148-8316	1	CONNECTOR AS
	3J-7354	1	SEAL-O-RING
	4J-5477	1	SEAL-O-RING
	6V-8647	1	CONNECTOR
51	148-8385	1	ELBOW AS
	3J-7354	1	SEAL-O-RING
	4J-5477	1	SEAL-O-RING
	6V-9000	1	ELBOW
54	199-9240	1	SEAL-O-RING
55	1L-3162	1	RING-RETAINING
56	3E-4353	3	WASHER-HARD (11X25X3-MM THK)
62	5M-7937	2	DOWEL
63	6V-5215	1	BOLT (M8X1.25X16-MM)
64	6V-5842	3	BOLT (M10X1.5X40-MM)
65	7T-5594	1	RING-SEAL
66	8T-2572	1	SEAL-O-RING
68	8T-4139	8	BOLT (M12X1.75X30-MM)
70	8T-4223	8	WASHER-HARD (13.5X25.5X3-MM THK)
73	9U-8875	1	RING-RETAINING

[A] PART OF 185-3955, 185-3956 AXLE AR

01122766
PR: t05i29k58b0226

187-4930 POWER TAKE-OFF GP

S/N: AZG1-879; AZH1-959

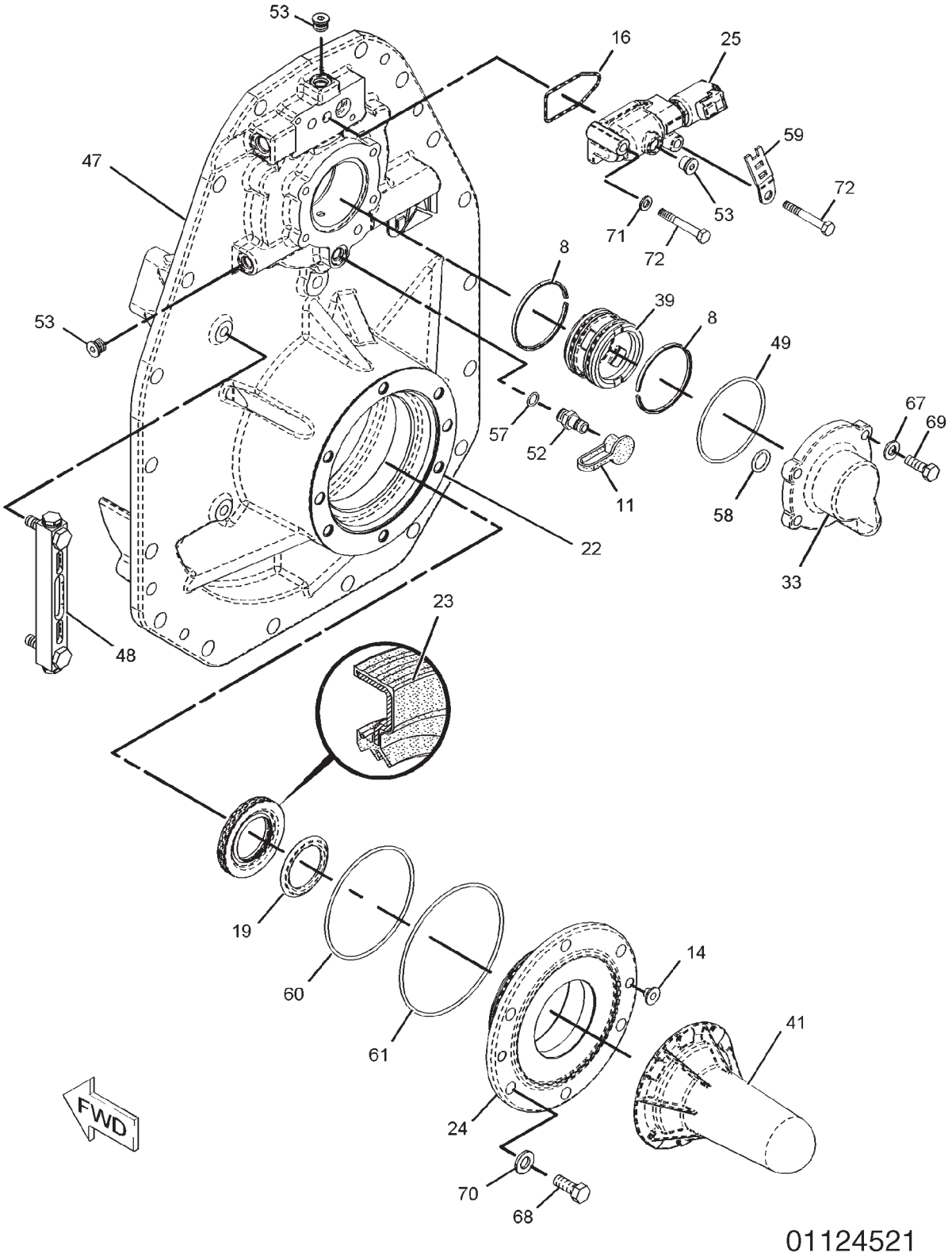

187-4930 POWER TAKE-OFF GP

S/N: AZG1-879; AZH1-959

ITEM	NUMBER	QTY	DESCRIPTION
-	187-4930	--	POWER TAKE-OFF GP (NOT SERVICED)
8	1T-1597	2	RING-SEAL
11	6V-0852	1	CAP-DUST
14	7C-6467	2	PLUG
16	8S-0768	1	SEAL-O-RING
19	160-6789	1	GUARD
22	164-3949	1	SHIM PACK (INCLUDES 13-SHIMS)
23	164-3951	1	SEAL-LIP TYPE
24	165-0260	1	CAGE-BEARING
25	216-5343	1	VALVE GP-MODULATING
			(CLUTCH PACK HYDRAULIC OIL)
			(SEE BREAKDOWN FOR COMPONENTS)
33	180-8369	1	COVER
39	188-7731	1	CARRIER-RING
41	199-4273	1	COVER AS
47	217-3556	1	COVER
48	217-3557	1	GAUGE-SIGHT
49	131-3718	1	SEAL-O-RING
52	6V-3965	1	FITTING AS [B]
53	162-0177	3	PLUG AS
	3J-1907	1	SEAL-O-RING
	9S-8004	1	PLUG
57	3J-1907	1	SEAL-O-RING
58	4J-5140	1	SEAL-O-RING
59	4P-7581	1	CLIP
60	5F-3999	1	SEAL-O-RING
61	5H-3252	1	SEAL-O-RING
67	8T-4121	4	WASHER-HARD (11X21X2.5-MM THK)
68	8T-4139	6	BOLT (M12X1.75X30-MM)
69	8T-4195	4	BOLT (M10X1.5X30-MM)
70	8T-4223	6	WASHER-HARD (13.5X25.5X3-MM THK)
71	8T-4224	1	WASHER-HARD (8.8X16X2-MM THK)
72	8T-6869	2	BOLT (M8X1.25X60-MM)

[A] PART OF 185-3955, 185-3956 AXLE AR
[B] NOT PART OF THIS GROUP

01124521
PR: t05i29k58b0227

187-4930 POWER TAKE-OFF GP
S/N: AZG880-900; AZH960-971

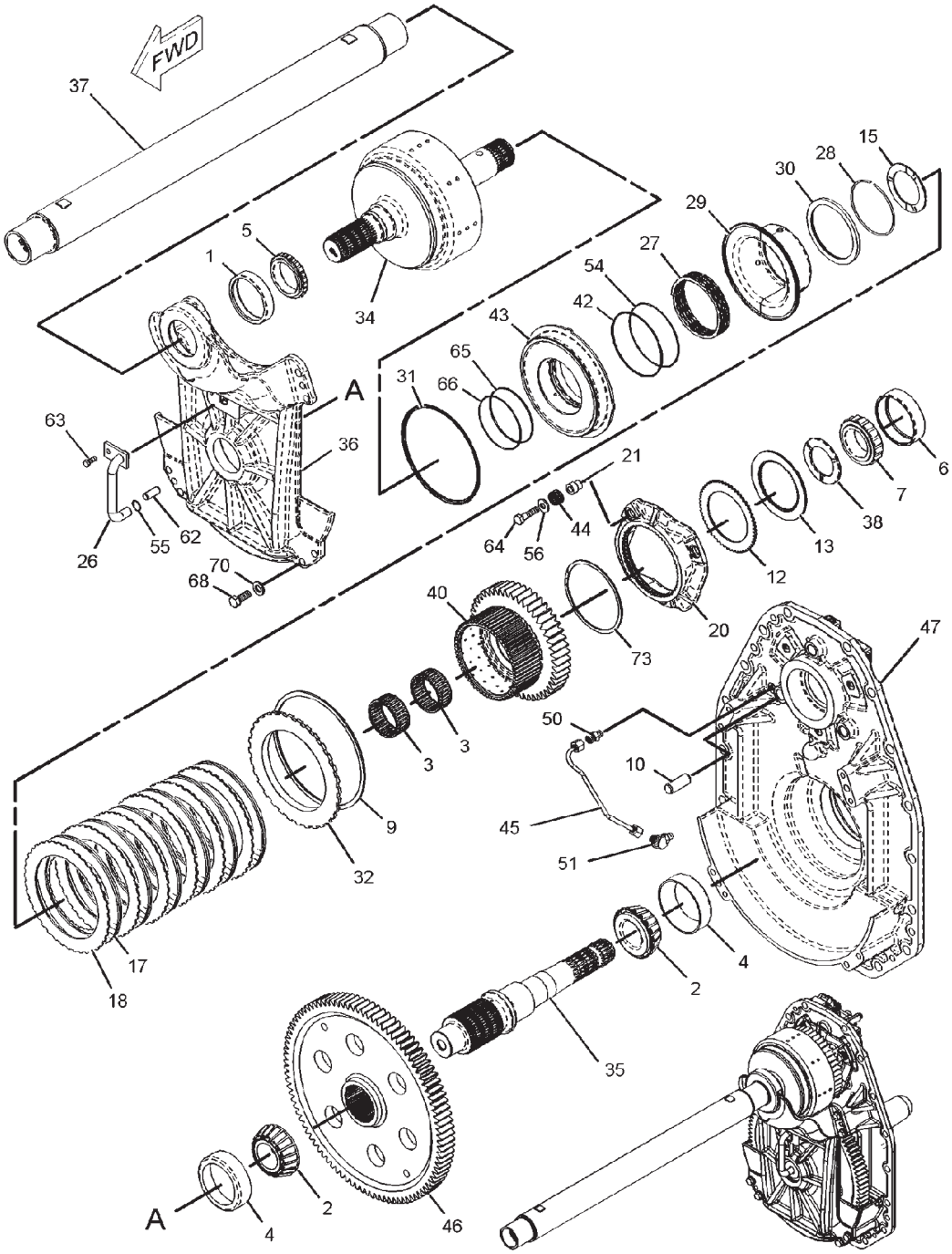

01122766

187-4930 POWER TAKE-OFF GP

S/N: AZG880-900; AZH960-971

ITEM	NUMBER	QTY	DESCRIPTION
-	187-4930	--	POWER TAKE-OFF GP [A] (NOT SERVICED)
1	172-3441	1	RACE-ROLLER BEARING
2	008-3178	2	CONE-BEARING
3	124-0492	2	BEARING-CAGED
4	2D-9190	2	CUP-BEARING
5	6H-7611	1	BEARING-INNER
6	8E-8276	1	RACE-BEARING OUTER
7	8E-8277	1	BEARING-INNER
9	4D-7889	1	RING
10	4T-4200	3	SLUG
12	6Y-5631	1	PLATE-CLUTCH
13	6Y-7968	1	DISC-FRICTION
15	8E-8653	1	DISC-THRUST
17	134-8360	6	DISC-FRICTION
18	134-8361	6	PLATE-CLUTCH
20	161-8739	1	PLATE-BRAKE
21	161-8848	3	BUSHING
26	168-4558	1	TUBE AS
27	173-5392	1	SPRING
28	177-5241	1	RING-RETAINING
29	177-5243	1	SEAL AS
30	177-5246	1	RING-SPACER
31	177-6797	1	RING-SEAL
32	177-6804	1	PLATE-END
34	180-8378	1	SHAFT AS
	7T-9356	1	PLUG-CUP
	9W-0719	1	PLUG
35	180-8382	1	SHAFT
36	180-8385	1	CARRIER-BEARING
37	180-8393	1	SHAFT AS
38	180-8395	1	DISC-THRUST

CONTINUED

[A] PART OF 185-3955, 185-3956 AXLE AR

187-4930 POWER TAKE-OFF GP
S/N: AZG880-900; AZH960-971

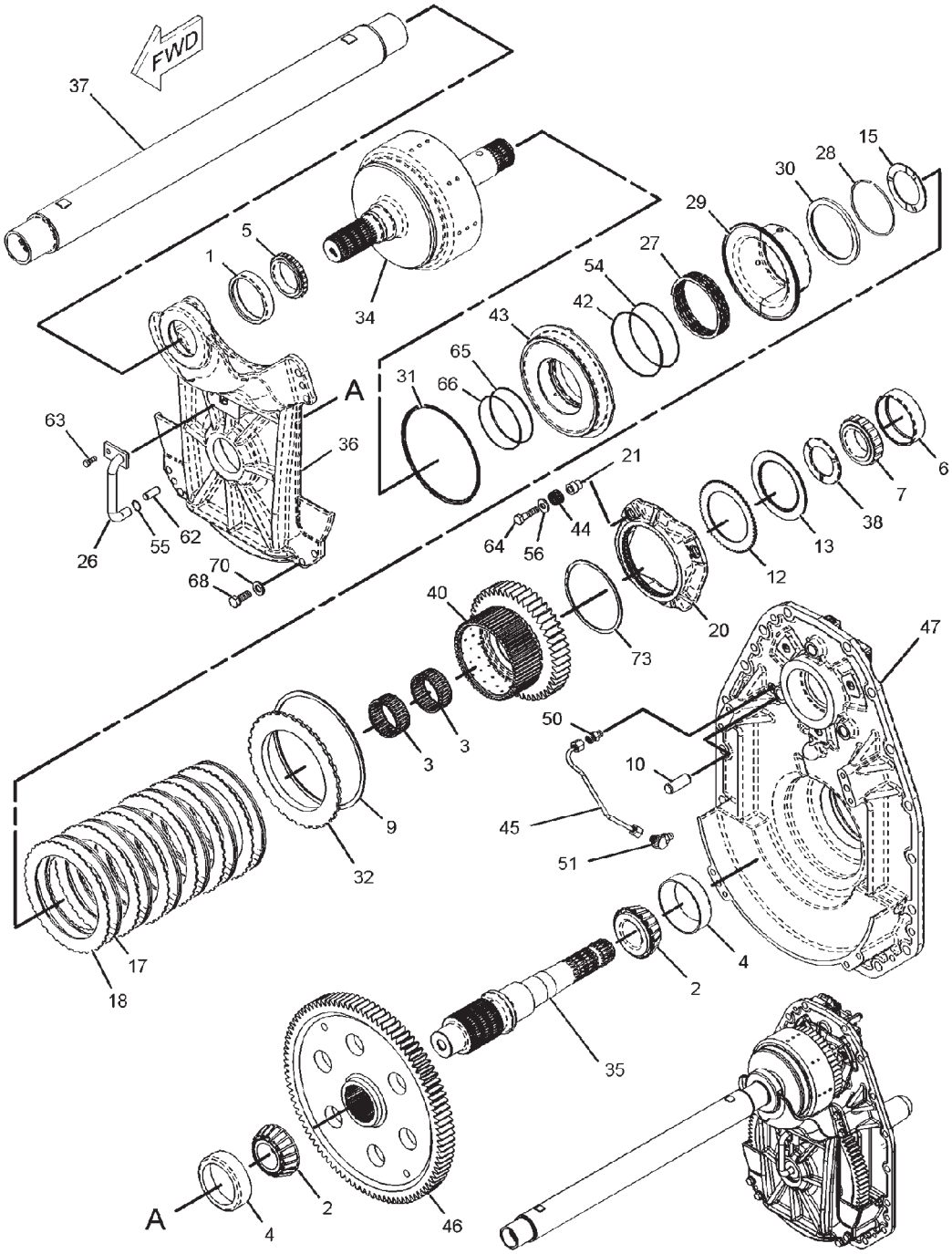

01122766

187-4930 POWER TAKE-OFF GP

S/N: AZG880-900; AZH960-971

ITEM	NUMBER	QTY	DESCRIPTION
-	187-4930	--	POWER TAKE-OFF GP [A] (NOT SERVICED)
40	191-5262	1	GEAR (48-TEETH)
42	200-3039	1	RING-SEAL
43	203-2631	1	PISTON
44	210-1975	3	SPRING
45	211-8276	1	TUBE AS
46	216-9213	1	GEAR (95-TEETH)
47	217-3556	1	COVER
50	148-8316	1	CONNECTOR AS
	3J-7354	1	SEAL-O-RING
	4J-5477	1	SEAL-O-RING
	6V-8647	1	CONNECTOR
51	148-8385	1	ELBOW AS
	3J-7354	1	SEAL-O-RING
	4J-5477	1	SEAL-O-RING
	6V-9000	1	ELBOW
54	199-9240	1	SEAL-O-RING
55	1L-3162	1	RING-RETAINING
56	3E-4353	3	WASHER-HARD (11X25X3-MM THK)
62	5M-7937	2	DOWEL
63	6V-5215	1	BOLT (M8X1.25X16-MM)
64	6V-5842	3	BOLT (M10X1.5X40-MM)
65	7T-5594	1	RING-SEAL
66	8T-2572	1	SEAL-O-RING
68	8T-4139	8	BOLT (M12X1.75X30-MM)
70	8T-4223	8	WASHER-HARD (13.5X25.5X3-MM THK)
73	9U-8875	1	RING-RETAINING

[A] PART OF 185-3955, 185-3956 AXLE AR

01122766
PR: t05i29k58b0228

187-4930 POWER TAKE-OFF GP
S/N: AZG880-900; AZH960-971

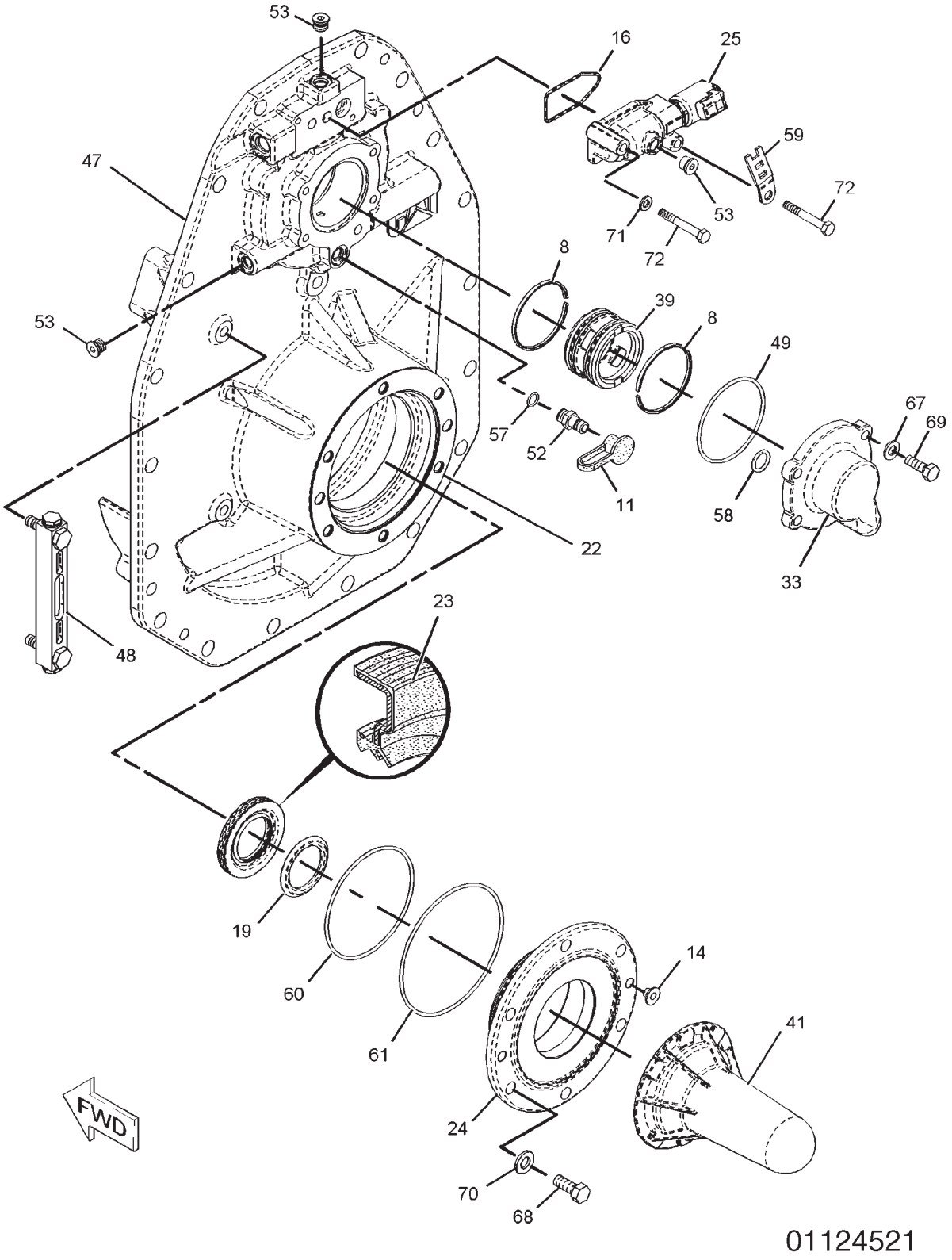

187-4930 POWER TAKE-OFF GP

S/N: AZG880-900; AZH960-971

ITEM	NUMBER	QTY	DESCRIPTION
-	187-4930	--	POWER TAKE-OFF GP [A] (NOT SERVICED)
8	1T-1597	2	RING-SEAL
11	6V-0852	1	CAP-DUST
14	7C-6467	2	PLUG
16	8S-0768	1	SEAL-O-RING
19	160-6789	1	GUARD
22	164-3949	AR	SHIM PACK (INCLUDES 13-SHIMS)
23	164-3951	1	SEAL-LIP TYPE
24	165-0260	1	CAGE-BEARING
25	216-5343	1	VALVE GP-MODULATING [C]
			(CLUTCH PACK HYDRAULIC OIL)
			(SEE BREAKDOWN FOR COMPONENTS)
33	180-8369	1	COVER
39	188-7731	1	CARRIER-RING
41	199-4273	1	COVER AS
47	217-3556	1	COVER
48	217-3557	1	GAUGE-SIGHT
49	131-3718	1	SEAL-O-RING
52	6V-3965	1	FITTING AS [B]
53	162-0177	3	PLUG AS
	3J-1907	1	SEAL-O-RING
	9S-8004	1	PLUG
57	3J-1907	1	SEAL-O-RING
58	4J-5140	1	SEAL-O-RING
59	4P-7581	1	CLIP
60	5F-3999	1	SEAL-O-RING
61	5H-3252	1	SEAL-O-RING
67	8T-4121	4	WASHER-HARD (11X21X2.5-MM THK)
68	8T-4139	6	BOLT (M12X1.75X30-MM)
69	8T-4195	4	BOLT (M10X1.5X30-MM)
70	8T-4223	6	WASHER-HARD (13.5X25.5X3-MM THK)
71	8T-4224	1	WASHER-HARD (8.8X16X2-MM THK)
72	8T-6869	2	BOLT (M8X1.25X60-MM)

[A] PART OF 185-3955, 185-3956 AXLE AR
[B] NOT PART OF THIS GROUP
[C] CHANGE FROM PREVIOUS TYPE

187-4930 POWER TAKE-OFF GP
S/N: AZG901-UP; AZH972-UP

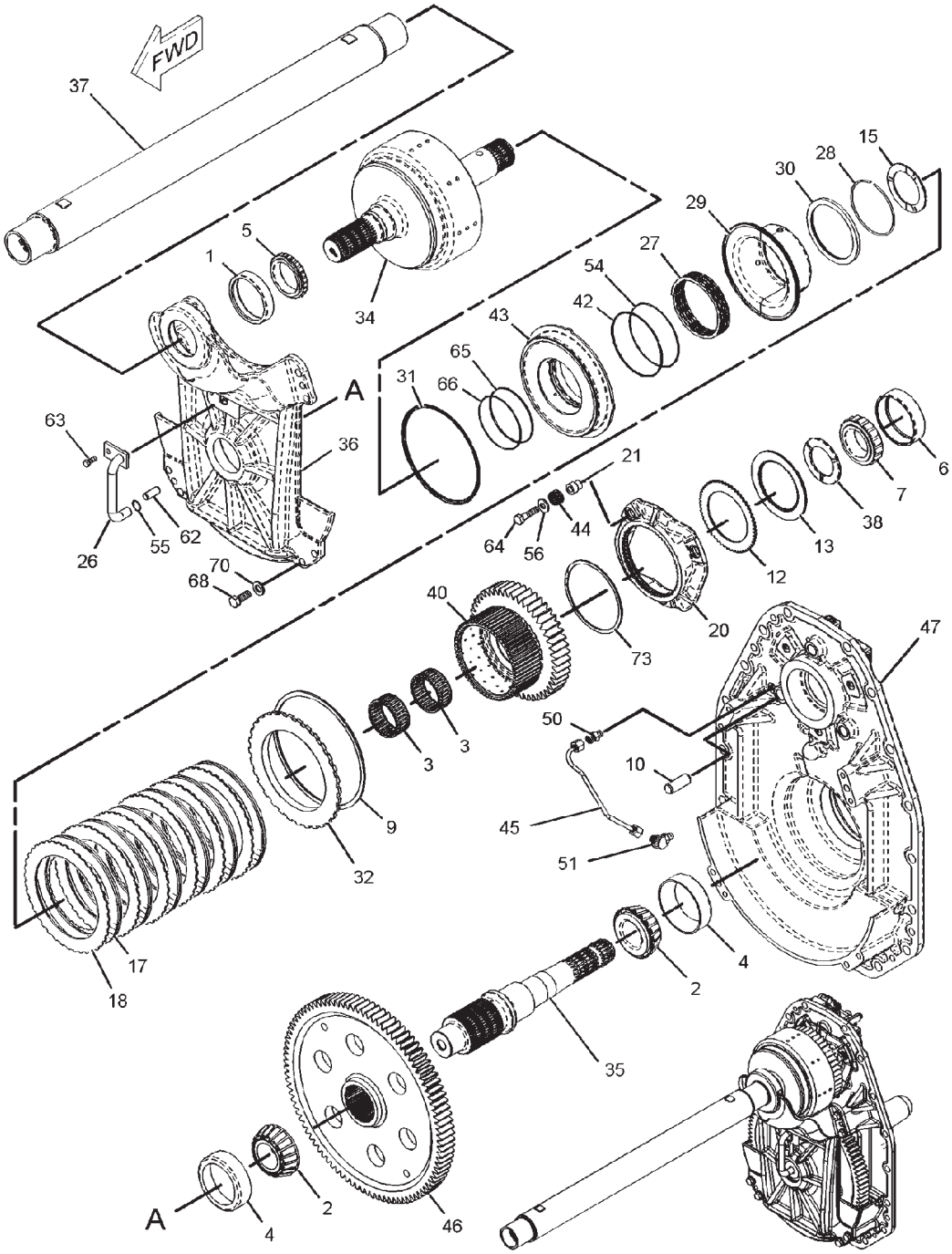

01122766

187-4930 POWER TAKE-OFF GP
S/N: AZG901-UP; AZH972-UP

ITEM	NUMBER	QTY	DESCRIPTION
-	187-4930	--	POWER TAKE-OFF GP [A] (NOT SERVICED)
1	172-3441	1	RACE-ROLLER BEARING
2	008-3178	2	CONE-BEARING
3	124-0492	2	BEARING-CAGED
4	2D-9190	2	CUP-BEARING
5	6H-7611	1	BEARING-INNER
6	8E-8276	1	RACE-BEARING OUTER
7	8E-8277	1	BEARING-INNER
9	4D-7889	1	RING
10	4T-4200	3	SLUG
12	6Y-5631	1	PLATE-CLUTCH
13	6Y-7968	1	DISC-FRICTION
15	8E-8653	1	DISC-THRUST
17	134-8360	6	DISC-FRICTION
18	134-8361	6	PLATE-CLUTCH
20	161-8739	1	PLATE-BRAKE
21	187-8141	3	BUSHING
26	168-4558	1	TUBE AS
27	173-5392	1	SPRING
28	177-5241	1	RING-RETAINING
29	177-5243	1	SEAL AS
30	177-5246	1	RING-SPACER
31	177-6797	1	RING-SEAL
32	177-6804	1	PLATE-END
34	180-8378	1	SHAFT AS
	7T-9356	1	PLUG-CUP
	9W-0719	1	PLUG
35	180-8382	1	SHAFT
36	180-8385	1	CARRIER-BEARING
37	180-8393	1	SHAFT AS
38	180-8395	1	DISC-THRUST

CONTINUED

[A] PART OF 185-3955, 185-3956 AXLE AR

187-4930 POWER TAKE-OFF GP

S/N: AZG901-UP; AZH972-UP

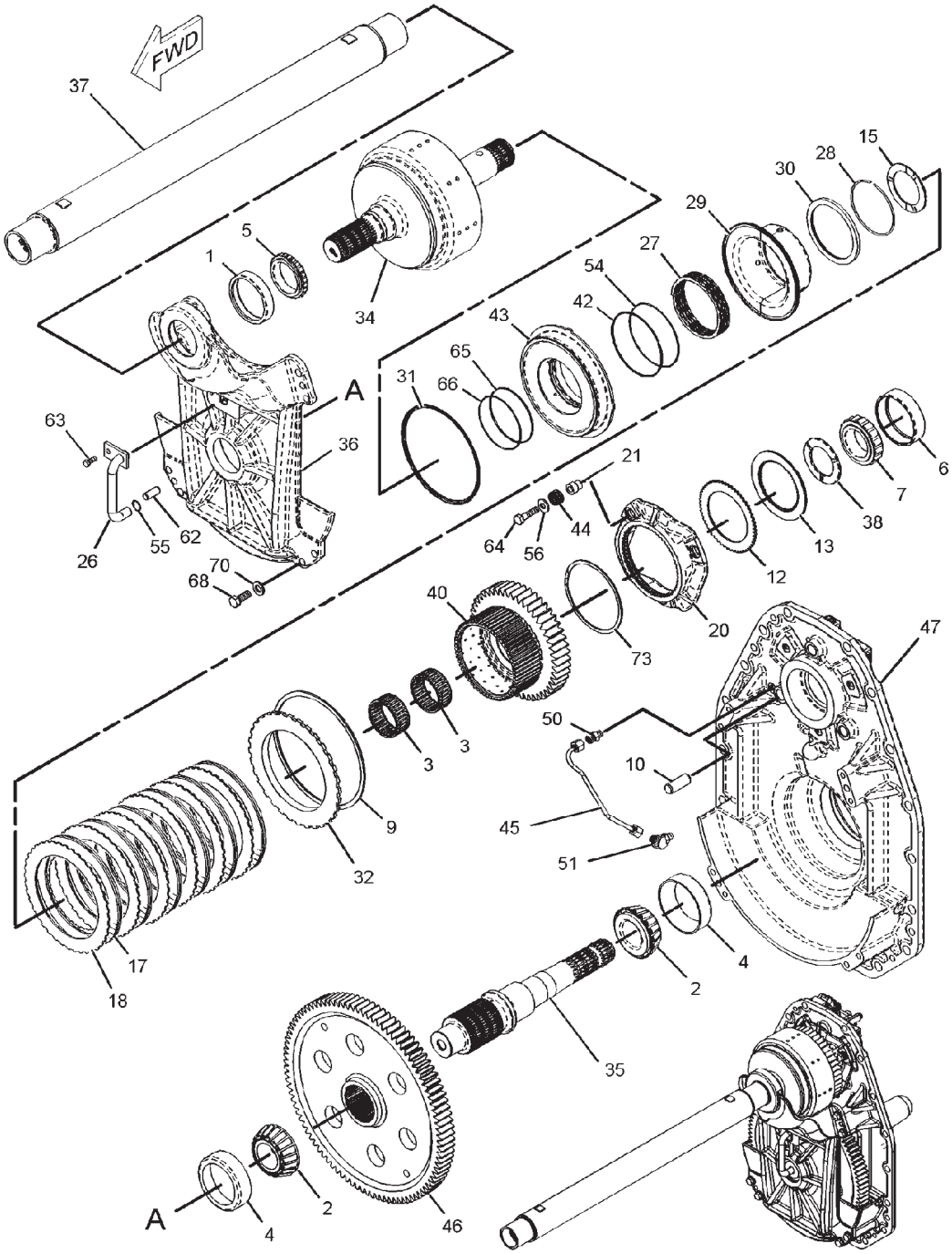

01122766

187-4930 POWER TAKE-OFF GP

S/N: AZG901-UP; AZH972-UP

ITEM	NUMBER	QTY	DESCRIPTION
-	187-4930	--	POWER TAKE-OFF GP [A] (NOT SERVICED)
40	191-5262	1	GEAR (48-TEETH)
42	200-3039	1	RING-SEAL
43	203-2631	1	PISTON
44	187-8142	3	SPRING
45	211-8276	1	TUBE AS
46	216-9213	1	GEAR (95-TEETH)
47	217-3556	1	COVER
50	148-8316	1	CONNECTOR AS
	3J-7354	1	SEAL-O-RING
	4J-5477	1	SEAL-O-RING
	6V-8647	1	CONNECTOR
51	148-8385	1	ELBOW AS
	3J-7354	1	SEAL-O-RING
	4J-5477	1	SEAL-O-RING
	6V-9000	1	ELBOW
54	199-9240	1	SEAL-O-RING
55	1L-3162	1	RING-RETAINING
56	3E-4353	3	WASHER-HARD (11X25X3-MM THK)
62	5M-7937	2	DOWEL
63	6V-5215	1	BOLT (M8X1.25X16-MM)
64	6V-4249	3	BOLT (M10X1.5X50-MM)
65	7T-5594	1	RING-SEAL
66	8T-2572	1	SEAL-O-RING
68	8T-4139	8	BOLT (M12X1.75X30-MM)
70	8T-4223	8	WASHER-HARD (13.5X25.5X3-MM THK)
73	9U-8875	1	RING-RETAINING

[A] PART OF 185-3955, 185-3956 AXLE AR

01122766
PR: t05i29k58b0230

187-4930 POWER TAKE-OFF GP

S/N: AZG901-UP; AZH972-UP

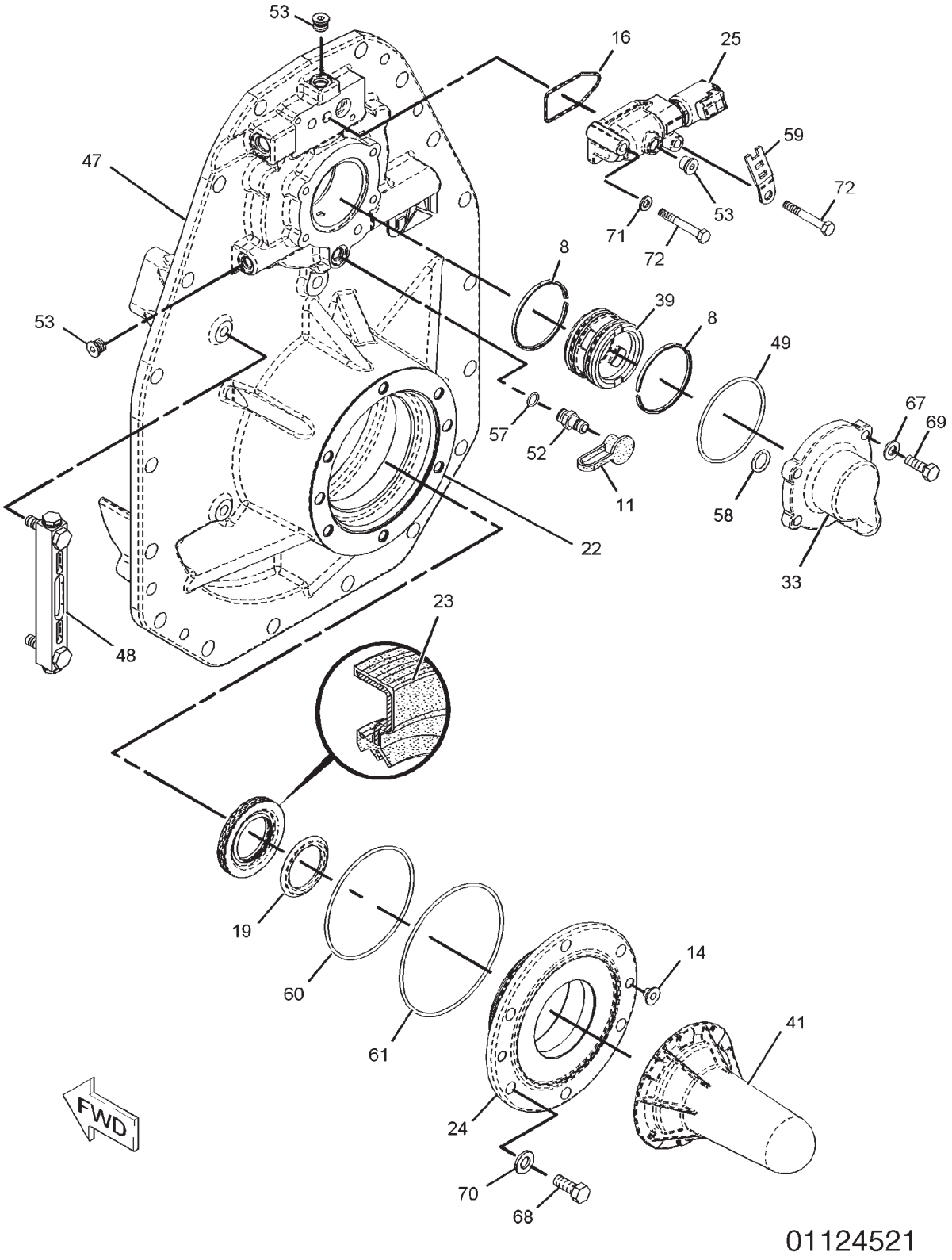

187-4930 POWER TAKE-OFF GP
S/N: AZG901-UP; AZH972-UP

ITEM	NUMBER	QTY	DESCRIPTION
-	187-4930	--	POWER TAKE-OFF GP [A] (NOT SERVICED)
8	1T-1597	2	RING-SEAL
11	6V-0852	1	CAP-DUST
14	7C-6467	2	PLUG
16	8S-0768	1	SEAL-O-RING
19	160-6789	1	GUARD
22	164-3949	AR	SHIM PACK (INCLUDES 13-SHIMS)
23	164-3951	1	SEAL-LIP TYPE
24	165-0260	1	CAGE-BEARING
25	216-5343	1	VALVE GP-MODULATING
			(CLUTCH PACK HYDRAULIC OIL)
			(SEE BREAKDOWN FOR COMPONENTS)
33	180-8369	1	COVER
39	188-7731	1	CARRIER-RING
41	199-4273	1	COVER AS
47	217-3556	1	COVER
48	217-3557	1	GAUGE-SIGHT
49	131-3718	1	SEAL-O-RING
52	6V-3965	1	FITTING AS [B]
53	162-0177	3	PLUG AS
	3J-1907	1	SEAL-O-RING
	9S-8004	1	PLUG
57	3J-1907	1	SEAL-O-RING
58	4J-5140	1	SEAL-O-RING
59	4P-7581	1	CLIP
60	5F-3999	1	SEAL-O-RING
61	5H-3252	1	SEAL-O-RING
67	8T-4121	4	WASHER-HARD (11X21X2.5-MM THK)
68	8T-4139	6	BOLT (M12X1.75X30-MM)
69	8T-4195	4	BOLT (M10X1.5X30-MM)
70	8T-4223	6	WASHER-HARD (13.5X25.5X3-MM THK)
71	8T-4224	1	WASHER-HARD (8.8X16X2-MM THK)
72	8T-6869	2	BOLT (M8X1.25X60-MM)

[A] PART OF 185-3955, 185-3956 AXLE AR
[B] NOT PART OF THIS GROUP

01124521
PR: t05i29k58b0231

216-5343 VALVE GP-MODULATING

S/N: AZG1-879; AZH1-959

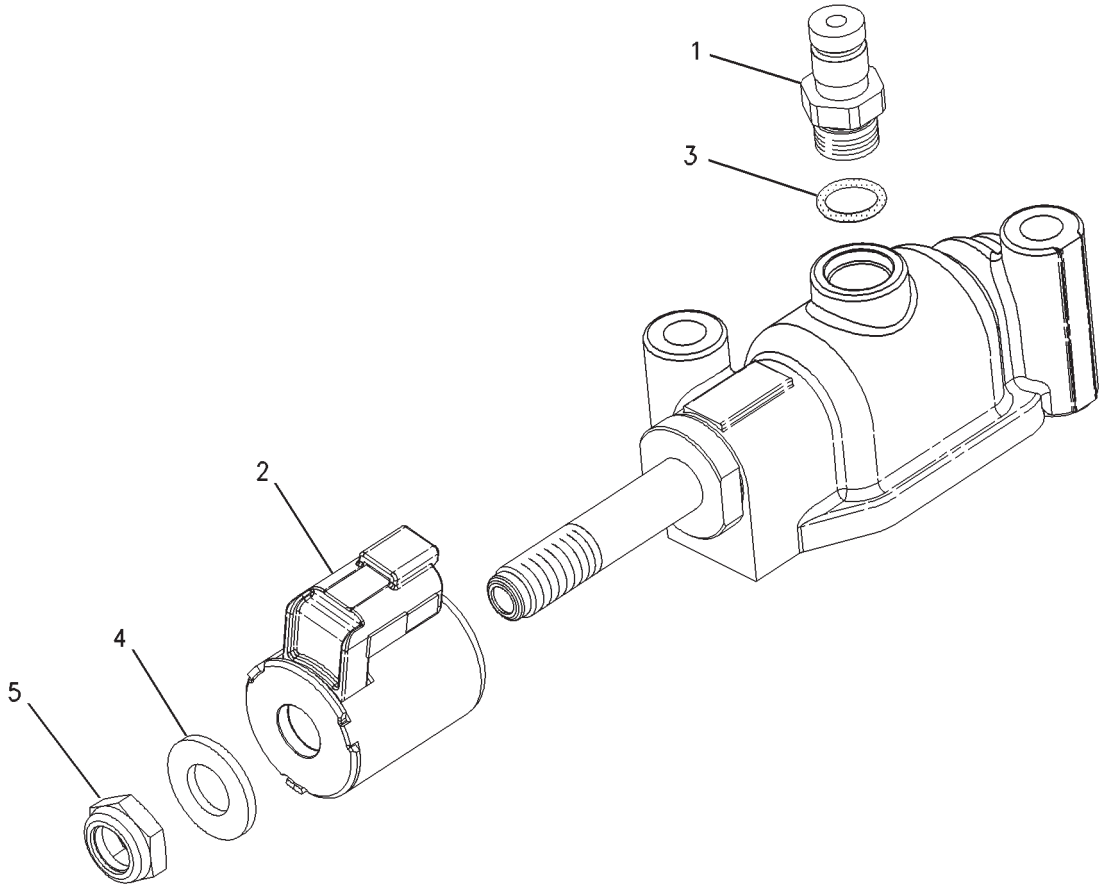

00672893

216-5343 VALVE GP-MODULATING

S/N: AZG1-879; AZH1-959

ITEM	NUMBER	QTY	DESCRIPTION
-	216-5343	--	VALVE GP-MODULATING [A]
1	6V-3965	1	FITTING AS
2	155-4426	1	COIL AS
3	3J-1907	1	SEAL-O-RING
4	164-2108	1	WASHER (13.03X25.4X2.38-MM THK)
5	167-9524	1	NUT-SELF-LOCKING (1/2-28-THD)

[A] PART OF 187-4930 POWER TAKE-OFF GP

00672893
PR: t05i29k58b0232

216-5343 VALVE GP-MODULATING

S/N: AZG880-UP; AZH960-UP; 9YY1-UP
12V ELECTRONIC CLUTCH PRESSURE CONTROL

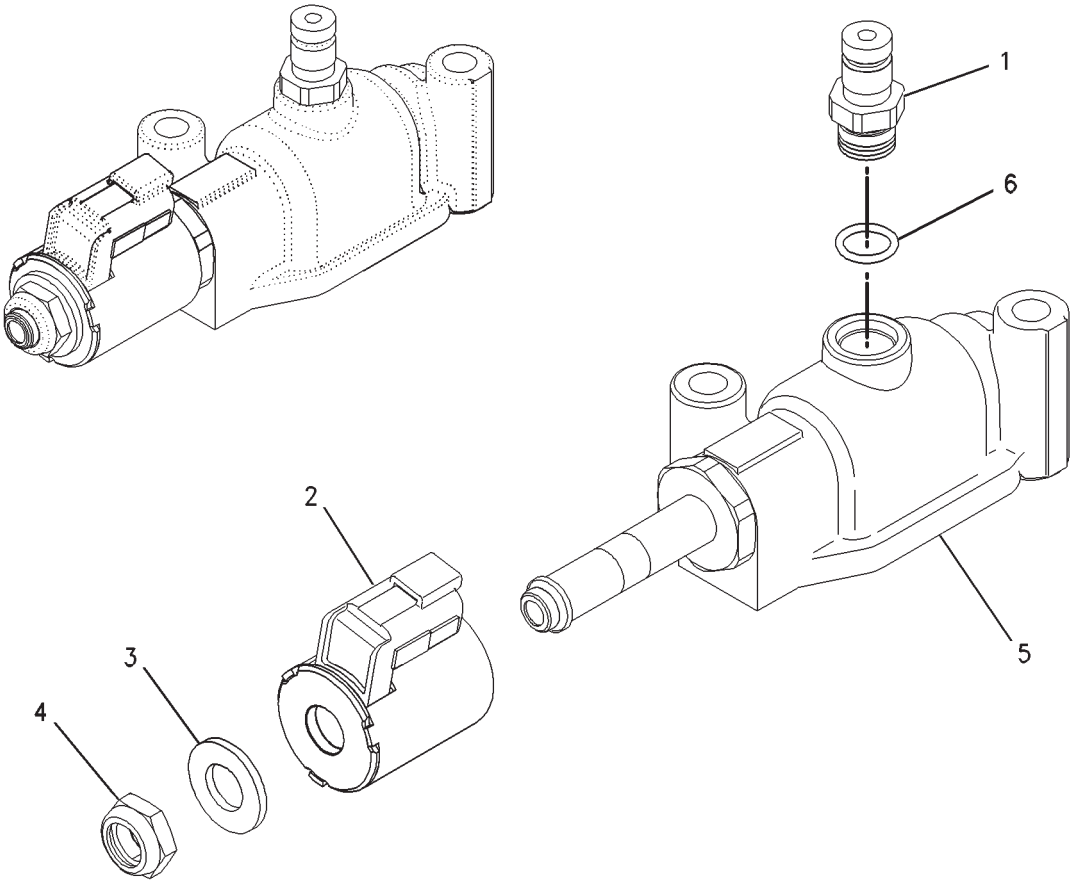

00890963

216-5343 VALVE GP-MODULATING

S/N: AZG880-UP; AZH960-UP; 9YY1-UP
12V ELECTRONIC CLUTCH PRESSURE CONTROL

ITEM	NUMBER	QTY	DESCRIPTION
-	216-5343	--	VALVE GP-MODULATING [A]
1	6V-3965	1	FITTING AS
2	155-4426	1	COIL AS
3	164-2108	1	WASHER (13.03X25.4X2.38-MM THK)
4	167-9524	1	NUT-SELF-LOCKING (1/2-28-THD)
5	-----	1	VALVE AS [Z]
6	3J-1907	1	SEAL-O-RING

[A] PART OF:
155-9580 CONTROL GP-TRANSMISSION HYD
187-4930 POWER TAKE-OFF GP
[Z] NOT SERVICED SEPARATELY

00890963
PR: t05i29k58b0233

CHASSIS AR - 179-1953

NO ILLUSTRATION

NOTIF 8

CHASSIS AR - 179-1953

ITEM	NUMBER	QTY	DESCRIPTION
-	179-1953	--	CHASSIS AR [A] (NOT SERVICED)
1	179-1954	1	FRAME GP (NOT SERVICED) (SEE BREAKDOWN FOR COMPONENTS)
2	189-5805	1	GUARD GP-POWER TRAIN (NOT SERVICED) (SEE BREAKDOWN FOR COMPONENTS)
3	162-4112	1	MOUNTING GP-CAB (NOT SERVICED) (SEE BREAKDOWN FOR COMPONENTS)
4	156-1327	1	STEP GP (NOT SERVICED) (SEE BREAKDOWN FOR COMPONENTS)
5	190-5441	1	SUPPORT GP-HOOD (NOT SERVICED) (SEE BREAKDOWN FOR COMPONENTS)
6	179-2182	1	TANK & MTG GP-FUEL (NOT SERVICED) (SEE BREAKDOWN FOR COMPONENTS)

[A] PART OF:
179-1952; 179-2180 BASE COMMON AR

NOTIF8
PR: t05i29k58b0234

MOUNTING GP-COUNTERWEIGHT - 184-5337

(504KG/1112 LB)
ROW ONLY

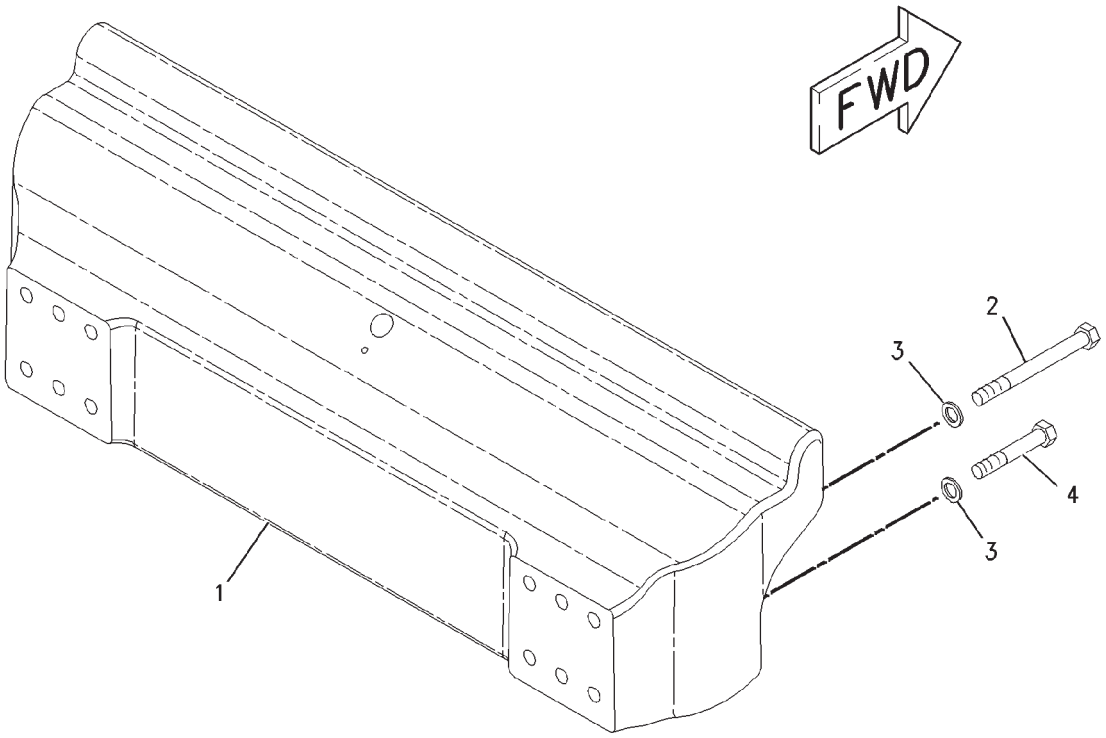

00835473

MOUNTING GP-COUNTERWEIGHT - 184-5337

(504KG/1112 LB)
ROW ONLY

ITEM	NUMBER	QTY	DESCRIPTION
-	184-5337	--	MOUNTING GP-COUNTERWGHT (NOT SERVICED)
1	184-5356	1	BRACKET
2	400194X1	6	BOLT (M20X2.5X180MM)
3	400080X1	12	WASHER-PLATED (22X35X3.5)
4	400236X1	6	BOLT (M20X2.5X120MM)

00835473
PR: t05i29k58b0235

COUNTERWEIGHT GP - 185-8688

ROLLER FRAME (1393KG/3071 LB)
ROW AND EAME

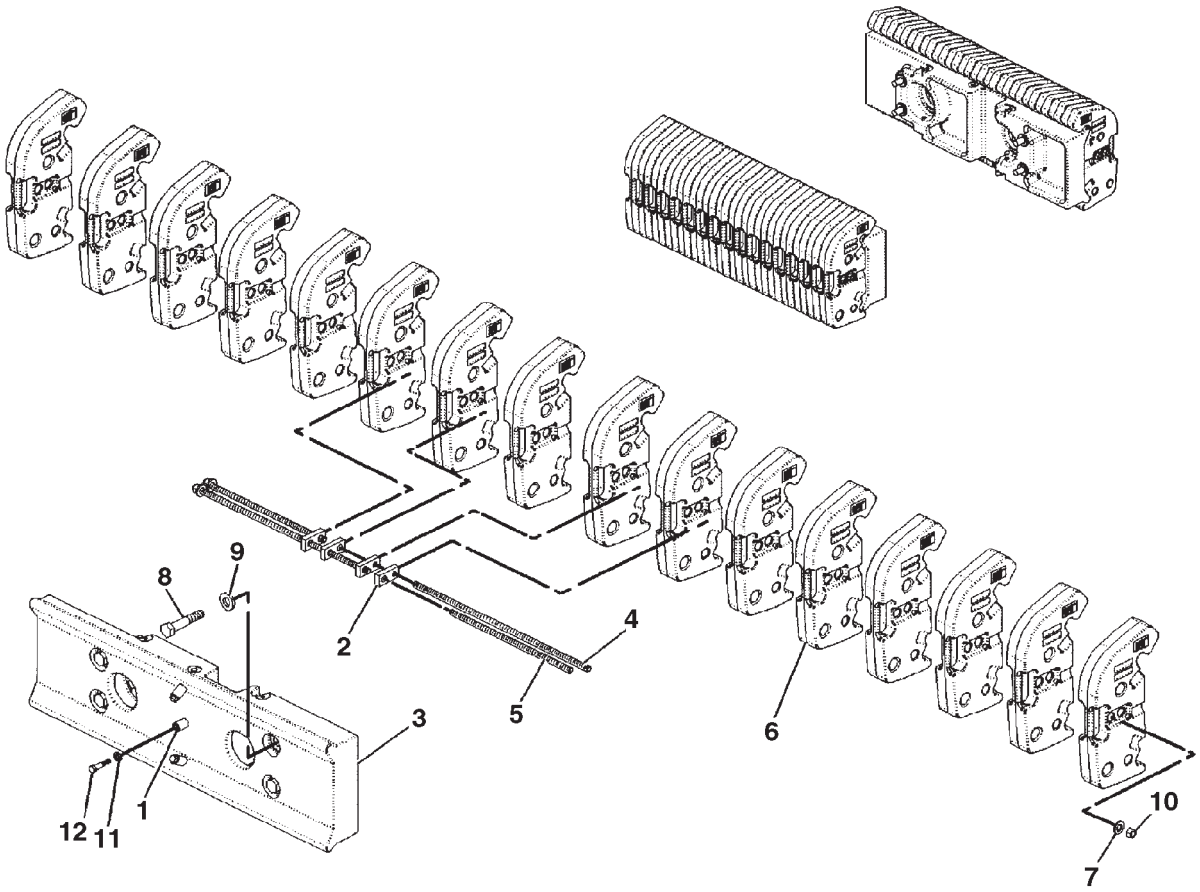

0886635A

COUNTERWEIGHT GP - 185-8688

ROLLER FRAME (1393KG/3071 LB)
ROW AND EAME

ITEM	NUMBER	QTY	DESCRIPTION
-	185-8688	--	COUNTERWEIGHT GP (NOT SERVICED)
1	CH8V-9708	6	SPACER (14.3X25.4X35)
2	400350X1	8	NUT-RETAINER
3	166-7774	2	SUPPORT
4	166-7775	4	ROD (COUNTERWEIGHT)
5	166-7776	4	ROD (COUNTERWEIGHT)
6	171-7234	32	WEIGHT
7	CH7X-0515	8	WASHER-HARD (17X35X5)
8	400213X1	8	BOLT (M24X3X120MM)
9	CH8T-1482	8	WASHER-HARD (26X50X8)
10	CH8T-4132	8	NUT (M16X2)
11	400357X1	6	WASHER-HARD (M12X25.5X3)
12	400063X1	6	BOLT (M12X1.75X60MM)
13	400091X1	6	PLUG PROTECTIVE (NOT SHOWN)

0886635A
PR: t05i29k58b0236

COUNTERWEIGHT GP - 185-8690

ROLLER FRAME (2786KG/6142 LB)
ROW AND EAME

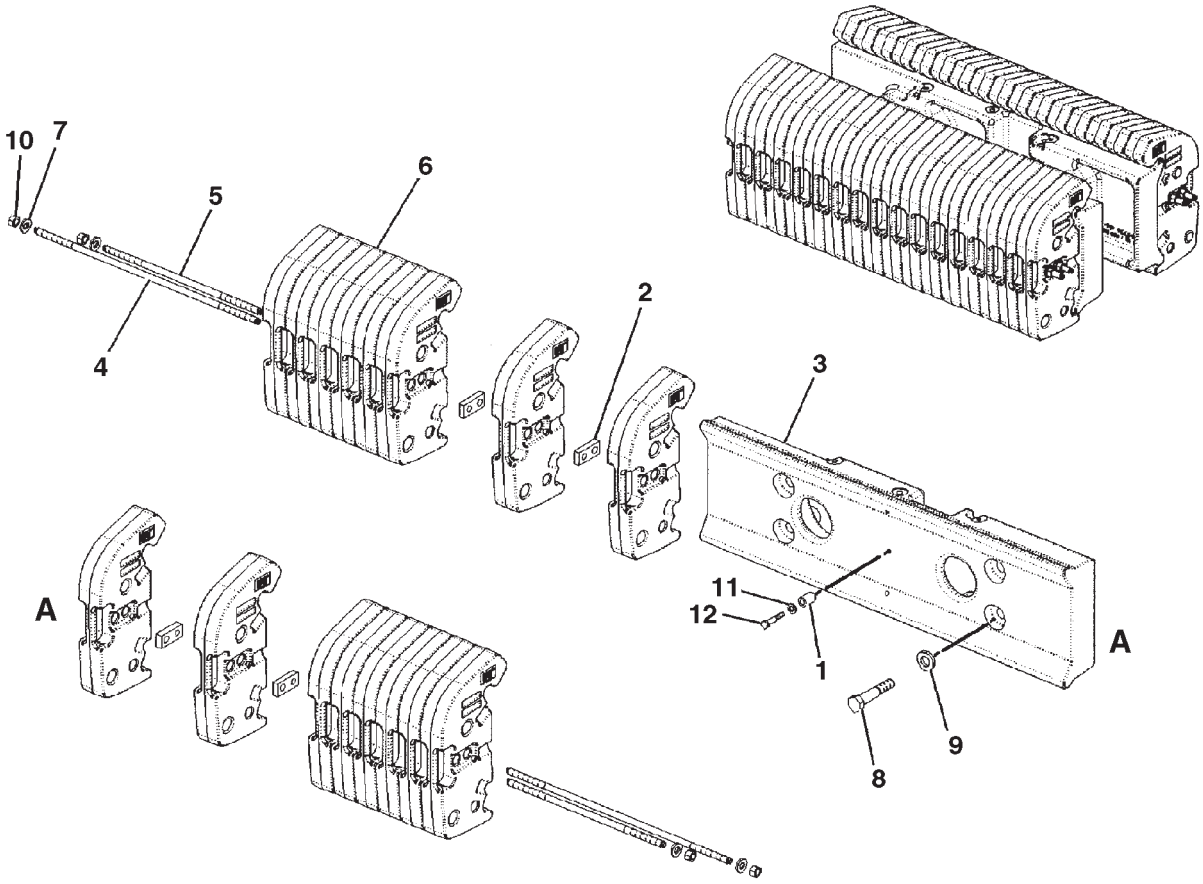

COUNTERWEIGHT GP - 185-8690

ROLLER FRAME (2786KG/6142 LB)
ROW AND EAME

ITEM	NUMBER	QTY	DESCRIPTION
-	185-8690	--	COUNTERWEIGHT GP (NOT SERVICED)
1	CH8V-9708	12	SPACER (14.3X25.4X35)
2	400350X1	16	NUT-RETAINER
3	166-7774	4	SUPPORT
4	166-7775	8	ROD
5	166-7776	8	ROD
6	171-7234	64	WEIGHT
7	CH7X-0515	16	WASHER-HARD (17X35X5)
8	400213X1	16	BOLT (M24X3X)
9	CH8T-1482	16	WASHER-HARD (26X50X8)
10	CH8T-4132	16	NUT (M16X2)
11	400357X1	12	WASHER-HARD (M12X25.5X3)
12	400063X1	12	BOLT (M12X1.75X60MM)

0887109A
PR: t05i29k58b0237

COUNTERWEIGHT GP-FRONT - 502116D1

6 WEIGHTS (963KG/2063LB)
EAME ONLY

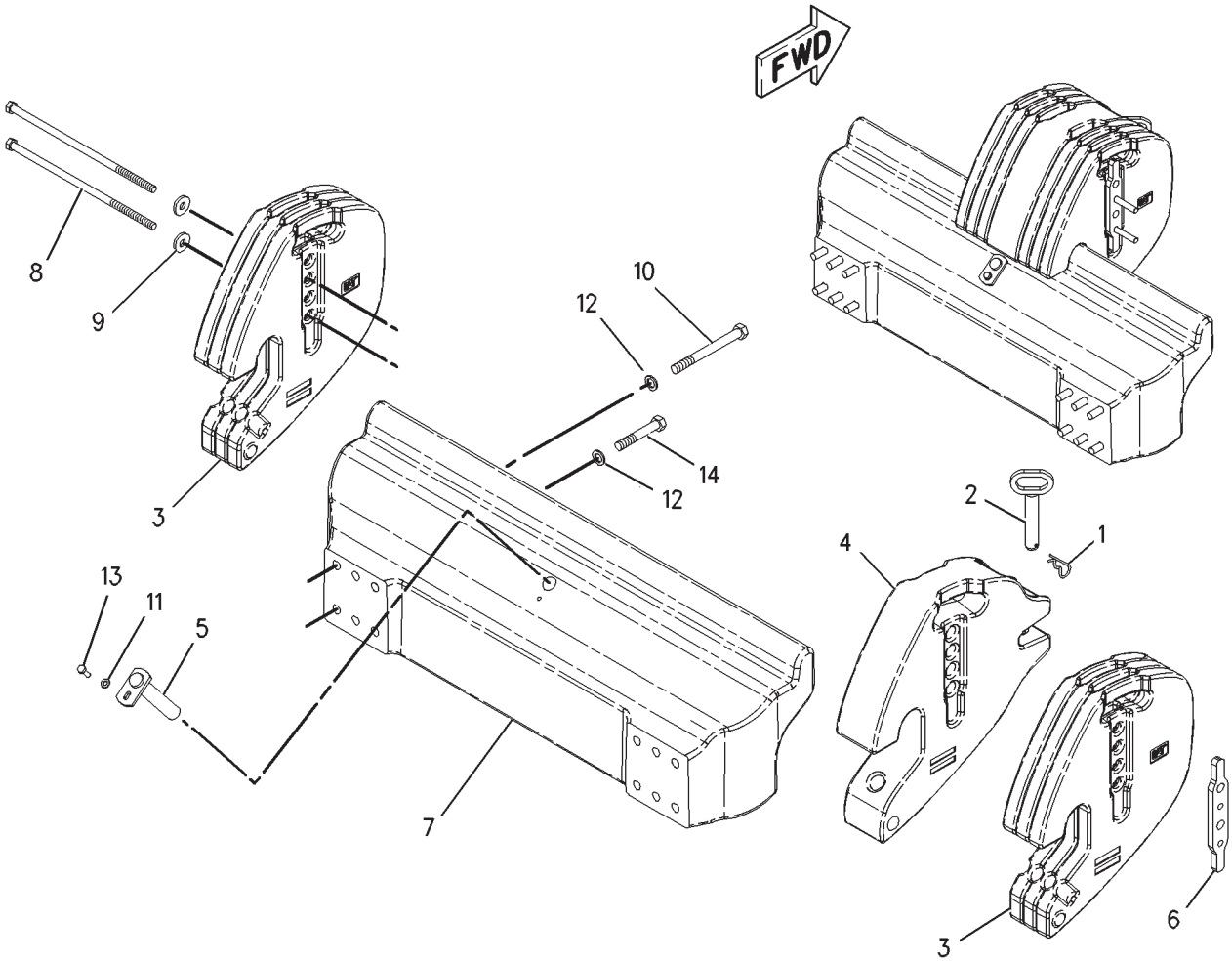

COUNTERWEIGHT GP-FRONT - 502116D1

6 WEIGHTS (963KG/2063LB)
EAME ONLY

ITEM	NUMBER	QTY	DESCRIPTION
-	502116D1	--	COUNTERWEIGHT GP-FRONT
1	CH5P-8837	1	LOCK PIN
2	CH137-9775	1	PIN AS
3	202-9220	6	WEIGHT
4	502113D1	1	WEIGHT (CENTER)
5	CH202-9222	1	PIN AS
6	202-9223	1	PLATE
7	184-5356	1	BRACKET
8	400268X1	2	BOLT (M16X2X440MM)
9	CH7X-0583	2	WASHER-HARD (17X45X6)
10	400194X1	6	BOLT (M20X2.5X180MM)
11	400375X1	1	WASHER-HARD (M12X25.5X3)
12	400080X1	12	WASHER-PLATED (22X35X3.5)
13	400041X1	1	BOLT (M12X1.75X30MM)
14	400236X1	6	BOLT (M20X2.5X120MM)

00776682
PR: t05i29k58b0238

COUNTERWEIGHT GP-FRONT - 502117D1

16 WEIGHTS (1403KG/3091LB)
EAME ONLY

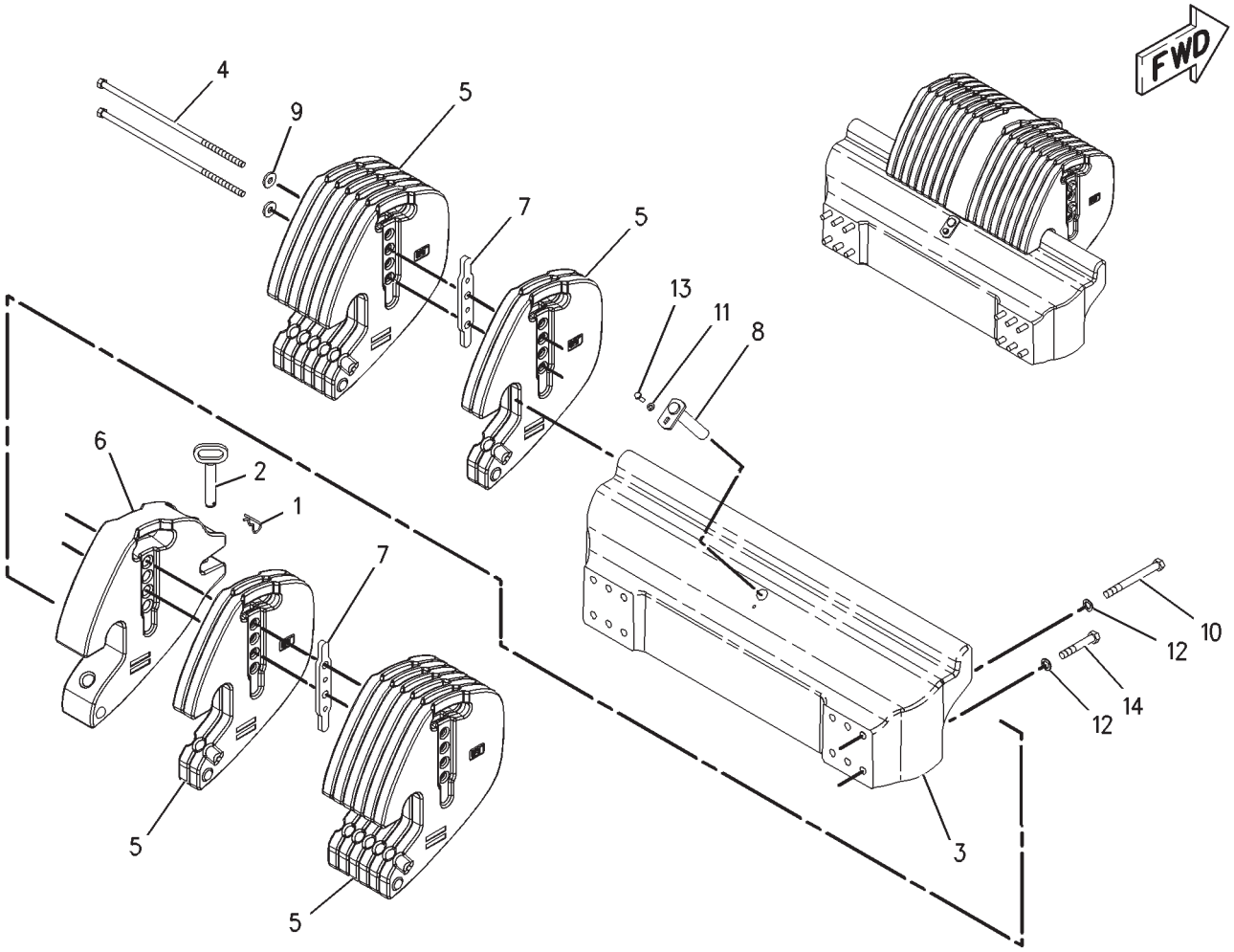

00875121

COUNTERWEIGHT GP-FRONT - 502117D1

16 WEIGHTS (1403KG/3091LB)
EAME ONLY

ITEM	NUMBER	QTY	DESCRIPTION
-	502117D1	--	COUNTERWEIGHT GP-FRONT
1	CH5P-8837	1	LOCK PIN
2	CH137-9775	1	PIN AS
3	184-5356	1	BRACKET
4	400267X1	2	BOLT (M16X2X550MM)
5	202-9220	16	WEIGHT
6	502113D1	1	WEIGHT (CENTER)
7	202-9223	2	PLATE
8	CH202-9222	1	PIN AS
9	CH7X-0583	2	WASHER-HARD (17X45X6)
10	400194X1	6	BOLT (M20X2.5X180MM)
11	400375X1	1	WASHER-HARD (M12X25.5X3)
12	400080X1	12	WASHER-PLATED (22X35X3.5)
13	400041X1	1	BOLT (M12X1.75X30MM)
14	400236X1	6	BOLT (M20X2.5X120MM)

00875121
PR: t05i29k58b0239

COUNTERWEIGHT GP-FRONT - 184-5329

20 WEIGHTS (1440KG/3175LB)
ROW ONLY

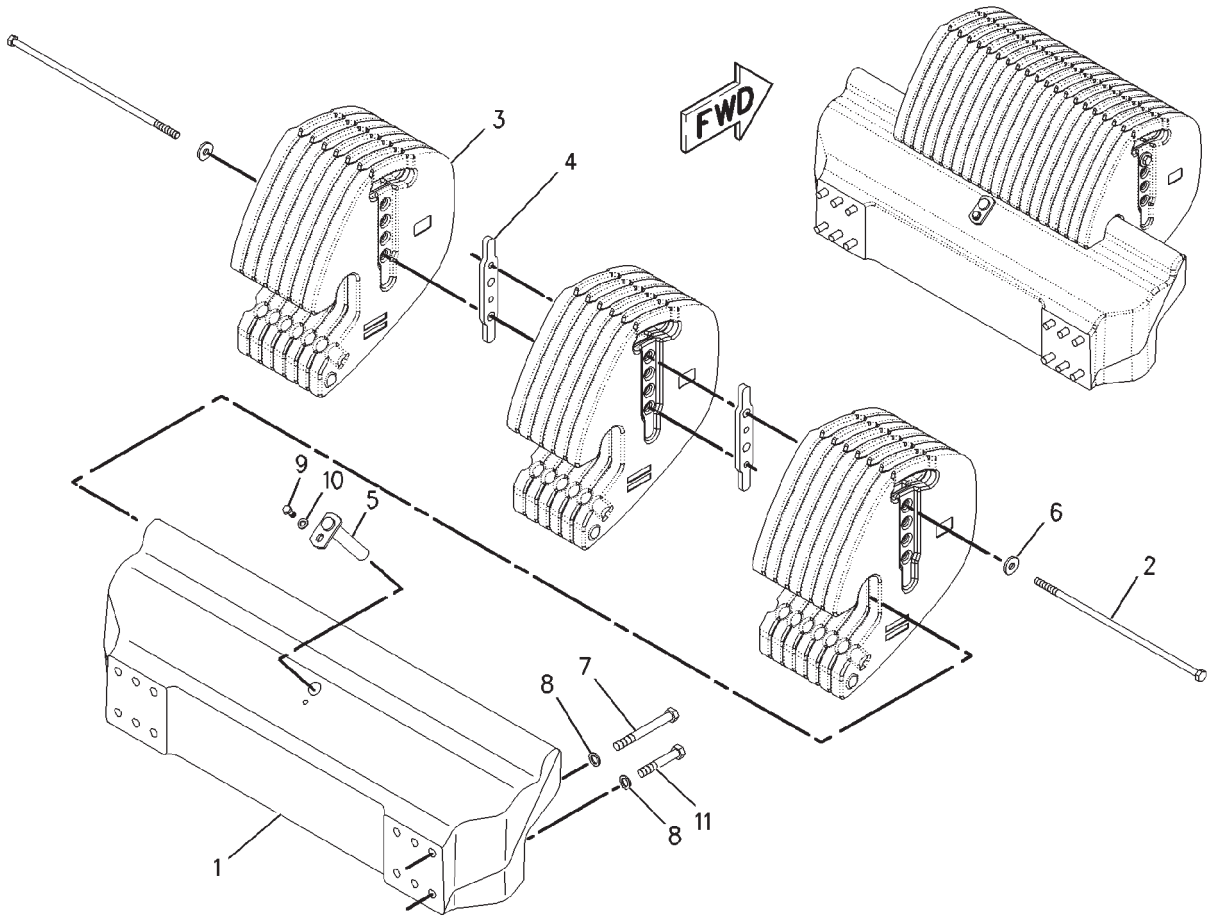

00887128

COUNTERWEIGHT GP-FRONT - 184-5329

20 WEIGHTS (1440KG/3175LB)
ROW ONLY

ITEM	NUMBER	QTY	DESCRIPTION
-	184-5329	--	COUNTERWEIGHT GP-FRONT
1	184-5356	1	BRACKET
2	400267X1	2	BOLT (M16X2X550MM)
3	202-9220	20	WEIGHT
4	202-9223	2	PLATE
5	CH202-9222	1	PIN ASM
6	CH7X-0583	2	WASHER-HARD (17X45X6)
7	400194X1	6	BOLT (M20X2.5X180MM)
8	400080X1	12	WASHER-PLATED (22X35X3.5)
9	400041X1	1	BOLT (M12X1.75X30MM)
10	400357X1	1	WASHER-HARD (M12X25.5X3)
11	400236X1	6	BOLT (M20X2.5X120MM)

00887128
PR: t05i29k58b0240

COUNTERWEIGHT GP-FRONT - 502118D1

28 WEIGHTS (1963KG/4328LB)
EAME ONLY

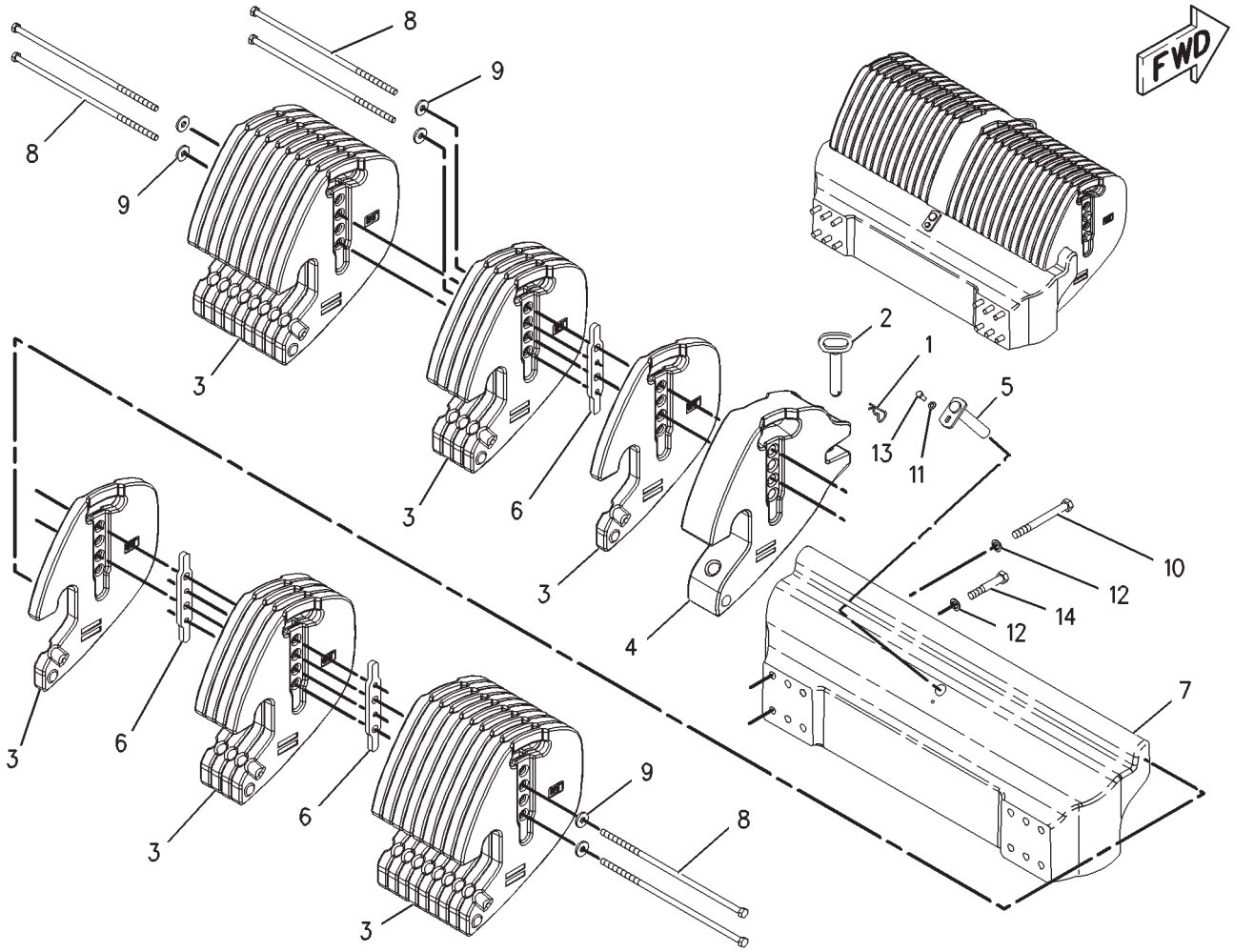

00779332

COUNTERWEIGHT GP-FRONT - 502118D1

28 WEIGHTS (1963KG/4328LB)
EAME ONLY

ITEM	NUMBER	QTY	DESCRIPTION
-	502118D1	--	COUNTERWEIGHT GP-FRONT
1	CH5P-8837	1	LOCK PIN
2	CH137-9775	1	PIN AS
3	202-9220	28	WEIGHT
4	502130D1	1	WEIGHT (CENTER)
5	CH202-9222	1	PIN AS
6	202-9223	3	PLATE
7	184-5356	1	BRACKET
8	400267X1	6	BOLT (M16X2X550MM)
9	CH7X-0583	6	WASHER-HARD (17X45X6)
10	400194X1	6	BOLT (M20X2.5X180MM)
11	400357X1	1	WASHER-HARD (M12X25.5X3)
12	400080X1	12	WASHER-PLATED (22X35X3.5)
13	400041X1	1	BOLT (M12X1.75X30MM)
14	400236X1	6	BOLT (M20X2.5X120MM)

00779332
PR: t05i29k58b0241

COUNTERWEIGHT GP-FRONT - 184-5357

32 WEIGHTS (2000KG/4409LB)

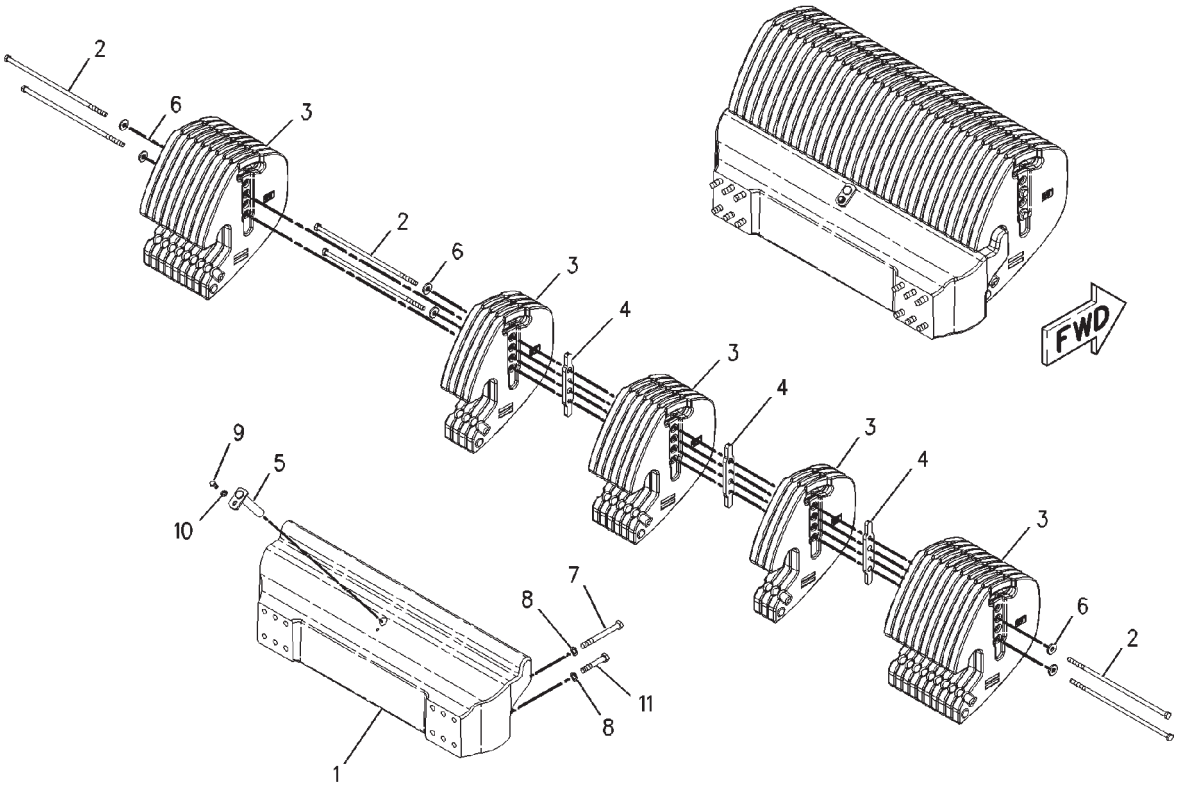

00835430

COUNTERWEIGHT GP-FRONT - 184-5357

32 WEIGHTS (2000KG/4409LB)

ITEM	NUMBER	QTY	DESCRIPTION
-	502784D1	--	COUNTERWEIGHT GP-FRNT [A] (FIELD INST)
-	502916D1	--	COUNTERWEIGHT GP-FRNT [A] (FACT OPTION) (NOT SERVICED)
-	184-5357	--	COUNTERWEIGHT GP-FRNT [A] (NOT SERVICED, ORDER FIELD INSTALLED)
1	184-5356	1	BRACKET
2	400267X1	6	BOLT (M16X2X550MM)
3	202-9220	32	WEIGHT
4	202-9223	3	PLATE
5	CH202-9222	1	PIN ASM
6	CH7X-0583	6	WASHER-HARD (17X45X6)
7	400194X1	6	BOLT (M20X2.5X180MM)
8	400080X1	12	WASHER-PLATED (22X35X3.5)
9	400041X1	1	BOLT (M12X1.75X30MM)
10	400357X1	1	WASHER-HARD (M12X25.5X3)
11	400236X1	6	BOLT (M20X2.5X120MM)

[A] PART OF 502784D1;502916D1
CNTRWGHT GP-FRONT

00835430
PR: t05i29k58b0242

COUNTERWEIGHT GP-IDLER - 177-4588
(909KG/2000LB)

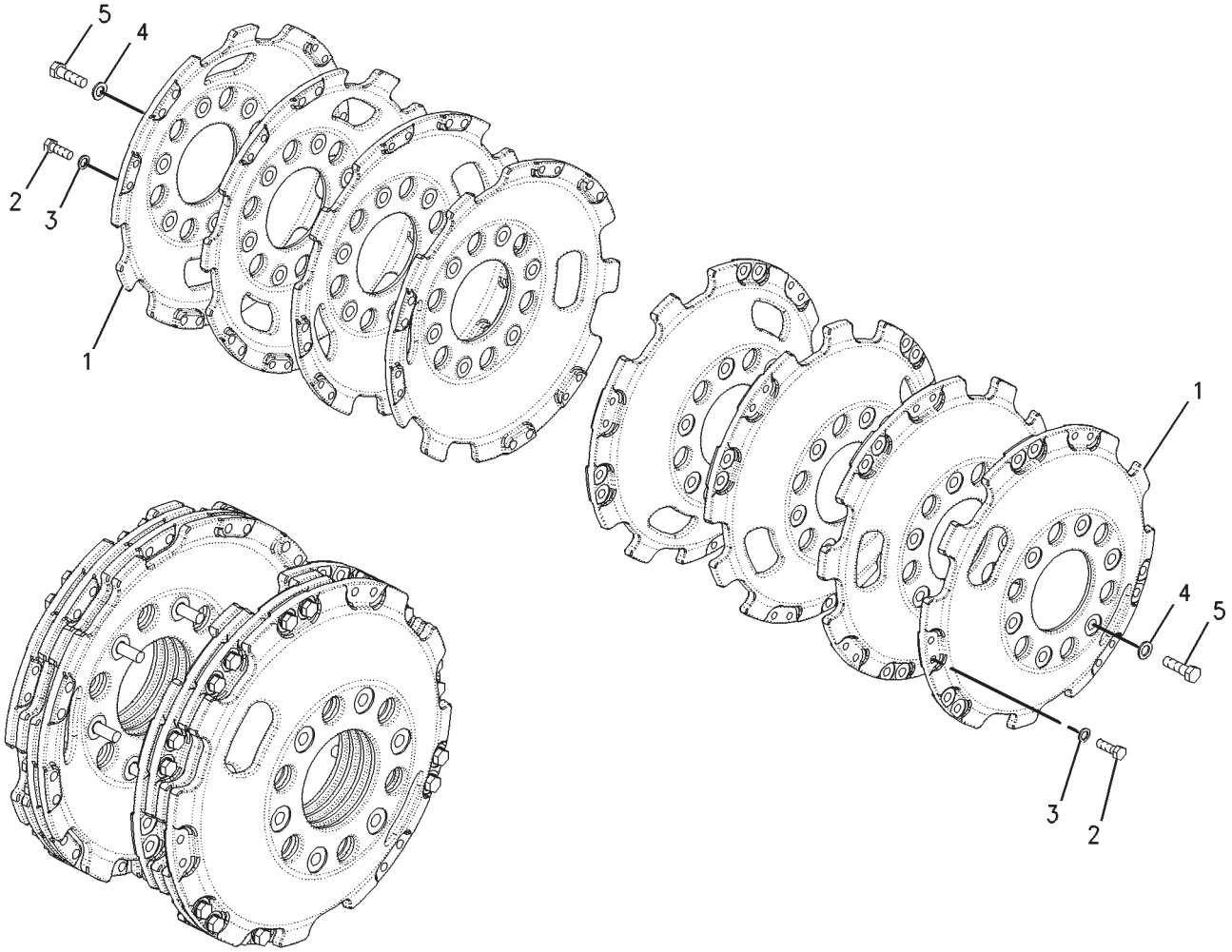

00814137

COUNTERWEIGHT GP-IDLER - 177-4588
(909KG/2000LB)

ITEM	NUMBER	QTY	DESCRIPTION
-	177-4588	--	COUNTERWEIGHT GP-IDLER (NOT SERVICED)
1	195-9633	16	COUNTERWEIGHT
2	400031X1	72	BOLT (M20X2.5X60MM)
3	400080X1	72	WASHER-PLATED (22X35X3.5)
4	400081X1	24	WASHER-HARD (26X44X4)
5	400067X1	24	BOLT (M24X3X80MM)
6	400090X1	24	PLUG, PLASTIC (M20) (NOT SHOWN)

00814137
PR: t05i29k58b0243

COUNTERWEIGHT GP-IDLER - 178-8047
(1575KG/3500LB)

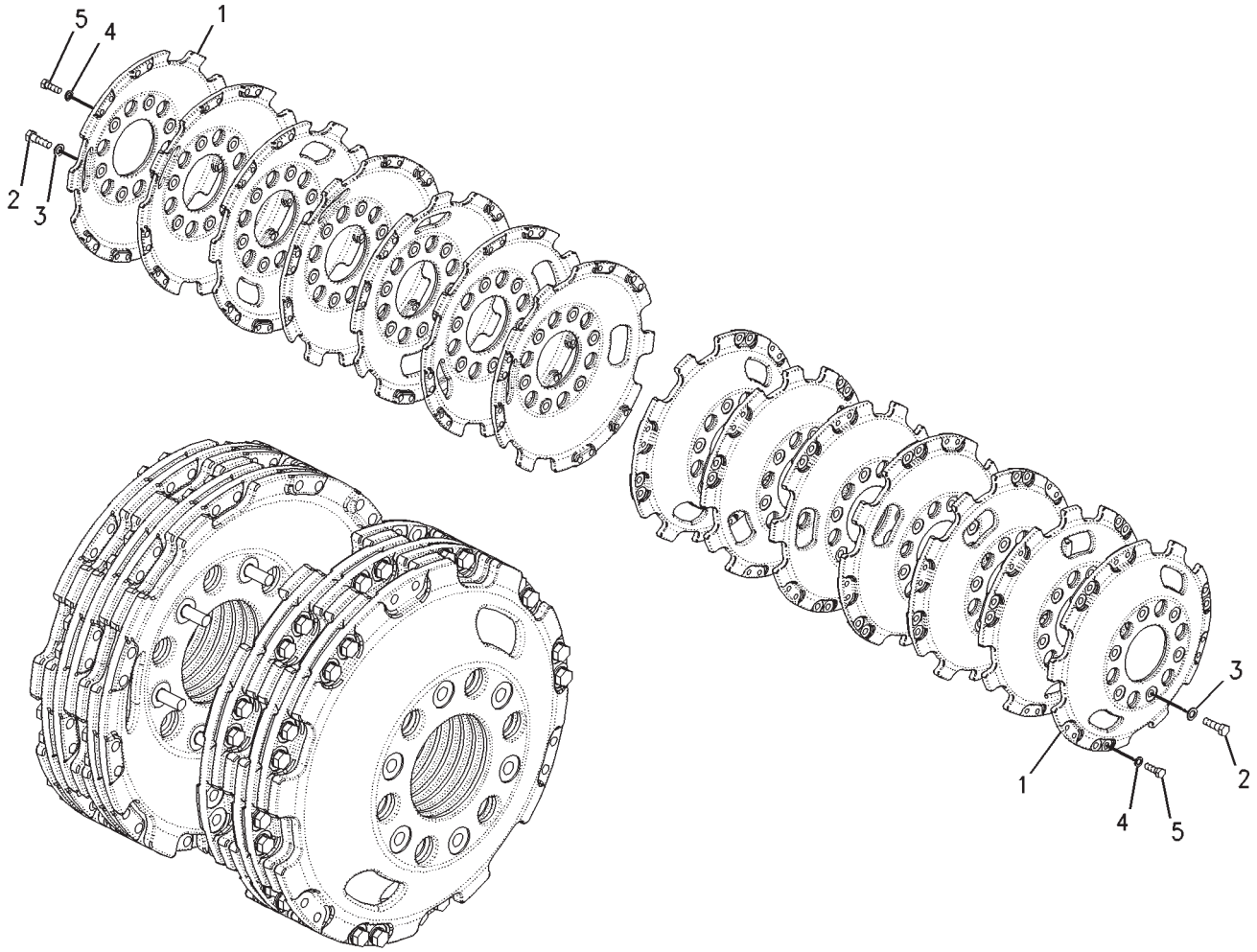

00814444

COUNTERWEIGHT GP-IDLER - 178-8047
(1575KG/3500LB)

ITEM	NUMBER	QTY	DESCRIPTION
-	178-8047	--	COUNTERWEIGHT GP-IDLER (NOT SERVICED)
1	195-9633	28	COUNTERWEIGHT
2	400031X1	144	BOLT (M20X2.5X60MM)
3	400080X1	144	WASHER-PLATED (22X35X3.5)
4	400081X1	24	WASHER-HARD (26X44X4)
5	400067X1	24	BOLT (M24X3X80MM)
6	400090X1	24	PLUG, PLASTIC (M20) (NOT SHOWN)

00814444
PR: t05i29k58b0244

COUNTERWEIGHT GP-IDLER - 185-8720
(2043KG/4500LB)

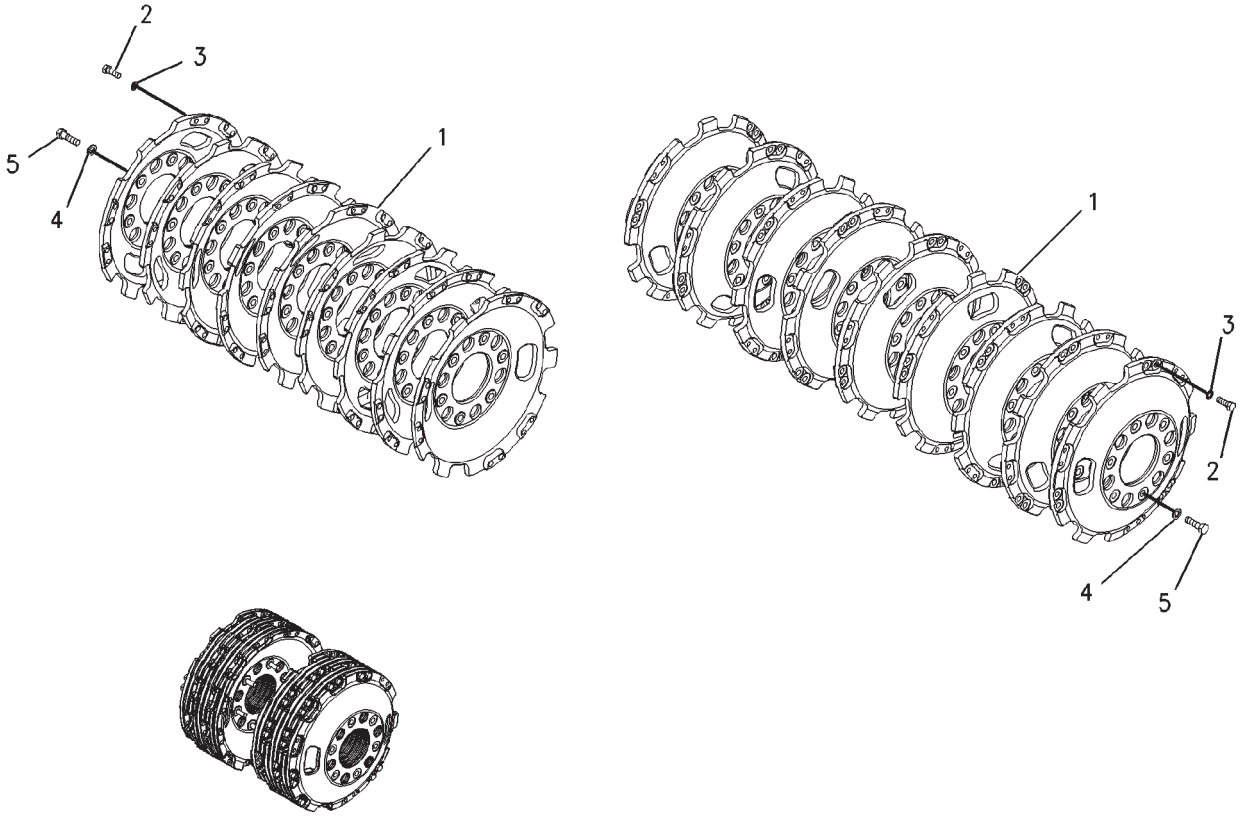

00835573

COUNTERWEIGHT GP-IDLER - 185-8720
(2043KG/4500LB)

ITEM	NUMBER	QTY	DESCRIPTION
-	185-8720	--	COUNTERWEIGHT GP-IDLER (NOT SERVICED)
1	195-9633	36	COUNTERWEIGHT
2	400031X1	192	BOLT (M20X2.5X60MM)
3	400080X1	192	WASHER-PLATED (22X35X3.5)
4	400081X1	24	WASHER-HARD (26X44X4)
5	400067X1	24	BOLT (M24X3X80MM)
6	400090X1	--	PLUG, PLASTIC (M20) (NOT SHOWN)

00835573
PR: t05i29k58b0245

COVER GP-ACCESS - 190-5943

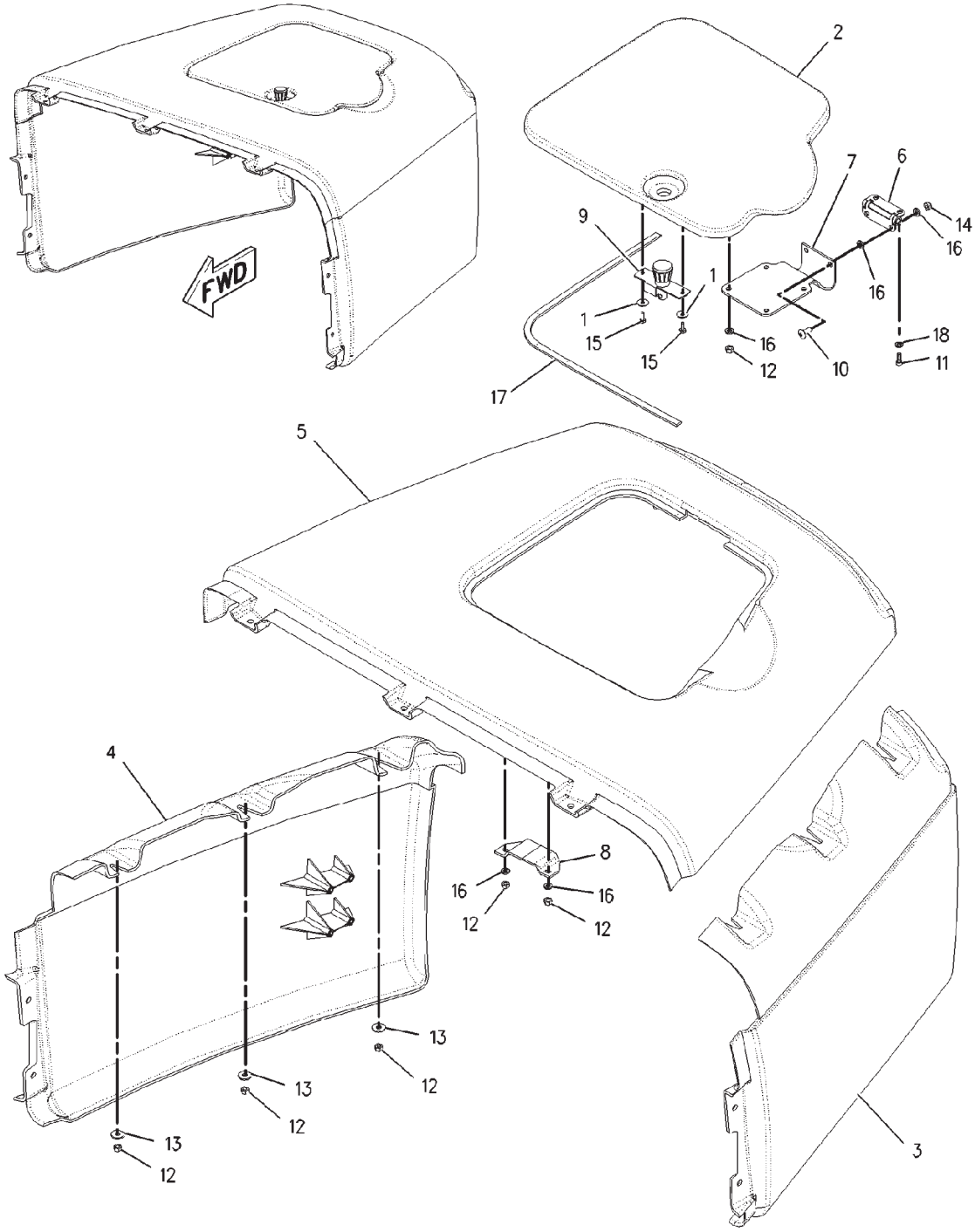

00891537

COVER GP-ACCESS - 190-5943

ITEM	NUMBER	QTY	DESCRIPTION
-	190-5943	--	COVER GP-ACCESS [A]
1	400076X1	2	WASHER (5X16X1.2)
2	190-5942	1	LID ASM
3	196-6944	1	PANEL ASM (LH)
4	196-6946	1	PANEL ASM (RH)
5	196-6954	1	PANEL ASM (TOP)
6	202-2356	1	HINGE
7	202-2357	1	BRACKET
8	208-9495	1	BRACKET
9	208-9496	1	LATCH ASM
10	210-4416	2	SCREW (M6)
11	400138X1	2	BOLT-SOCKET HEAD (M6X1X10.0MM)
12	400300X1	12	NUT (M6X1)
13	CH5P-4115	6	WASHER-HARD (7.2X19X2)
14	CH6V-7743	2	LOCKNUT (M6X1)
15	CH8T-0285	2	SCREW-MACHINE (M4X0.7X12MM)
16	400310X1	10	WASHER (6.6X12X2)
17	CH5P-3602		SEAL (6 DM)
18	CH8T-0334	2	WASHER-HARD (6.6X12.5X1.6)

[A] PART OF 156-1313; 161-9173
HOOD & GUARD GP

00891537
PR: t05i29k58b0246

FENDER GP - 161-9174
ROW & SPECIAL

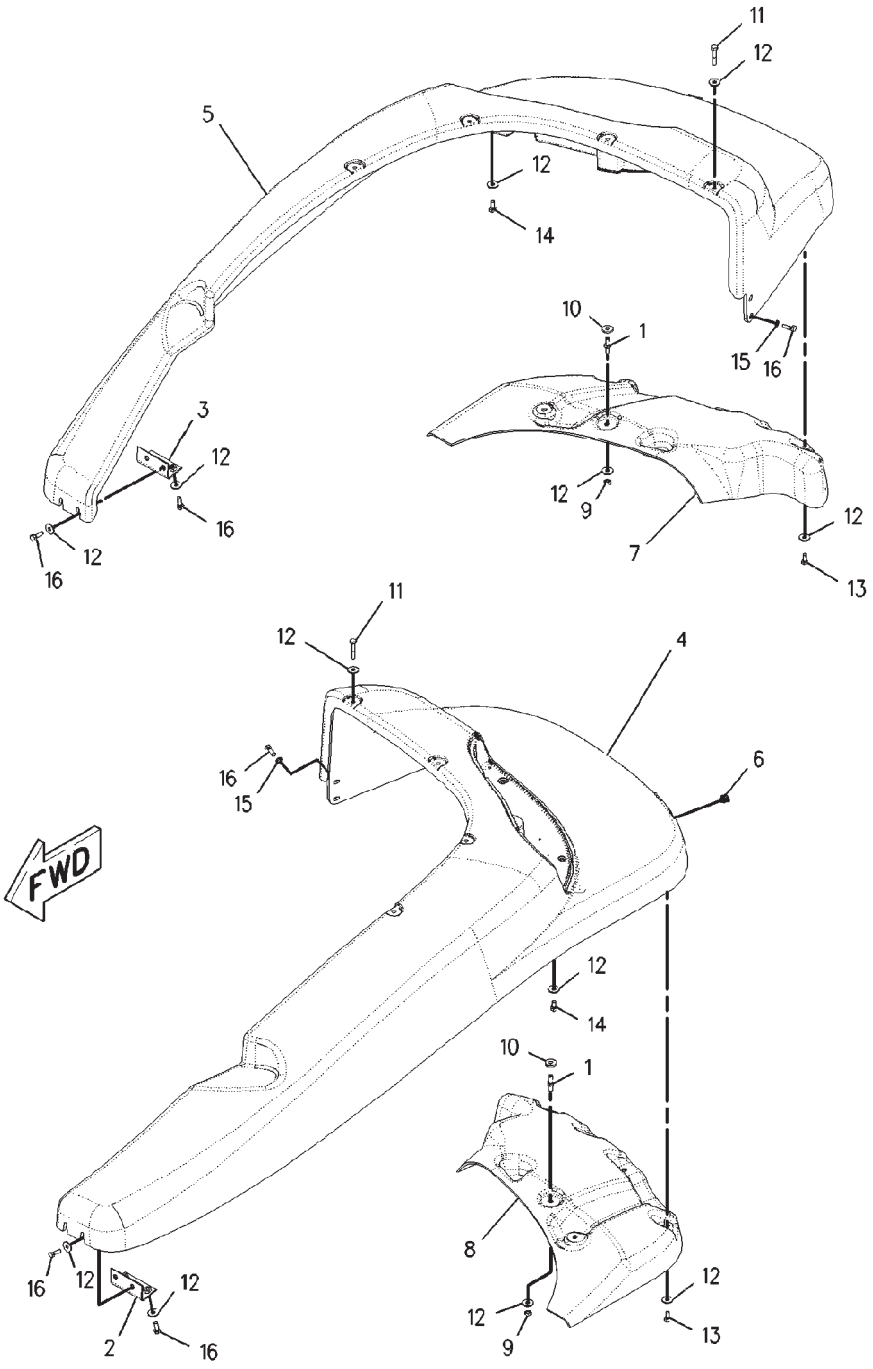

00857778

FENDER GP - 161-9174
ROW & SPECIAL

ITEM	NUMBER	QTY	DESCRIPTION
-	161-9174	--	FENDER GP [A] (NOT SERVICED)
1	400257X1	4	STUDBOLT (M8X1.25X20)
2	199-7855	1	BRACKET ASM
3	199-7859	1	BRACKET ASM
4	211-0174	1	FENDER ASM (LH)
	213-4902	1	GUARD (SWITCH)
	176-0997	1	COVER-LH
	176-0998	1	GASKET-LH
	176-0999	3	RIVET
5	211-0178	1	FENDER ASM (RH)
	213-4902	1	GUARD (SWITCH)
	176-0999	3	RIVET
	176-1001	1	COVER-RH
	176-1002	1	GASKET-RH
6	CH211-4423	1	PLUG
7	212-9998	1	GUARD
8	212-9996	1	GUARD
9	400340X1	4	NUT (M8X1.25)
10	CH7X-0613	4	WASHER-HARD (8.8X25.5X5)
11	400024X1	8	BOLT (M8X1.25X45MM)
12	CH8C-0572	32	WASHER (8.8X25.5X2)
13	400053X1	8	BOLT (M8X1.25X20MM)
14	400227X1	4	BOLT (M8X1.25X16MM)
15	CH8C-0572	4	WASHER (8.8X25.5X2)
16	400341X1	12	BOLT (M8X1.25X25MM)

[A] PART OF 179-1952 BASE COMMON AR

FENDER GP - 161-9177
EAME ONLY

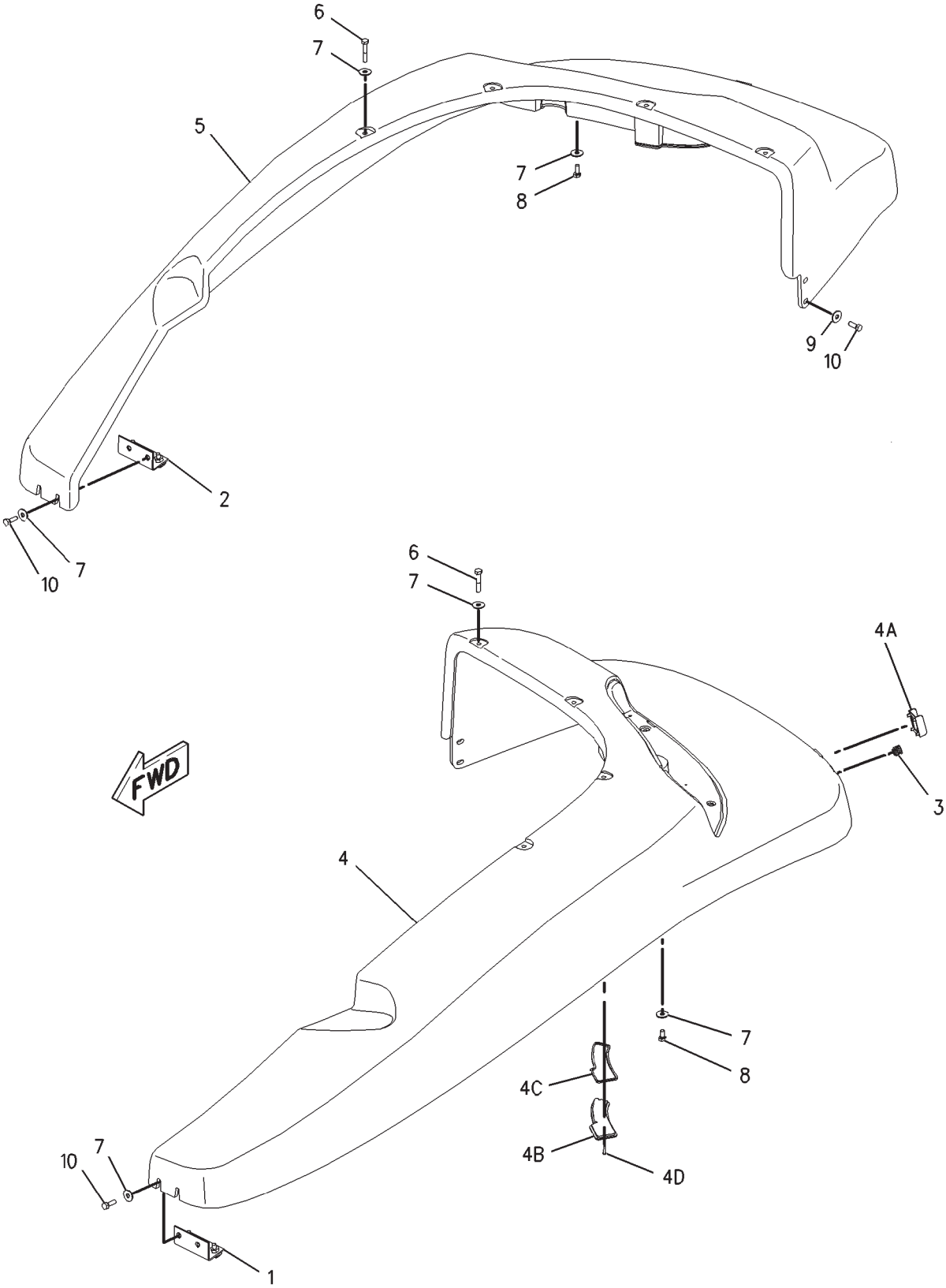

00857779

FENDER GP - 161-9177
EAME ONLY

ITEM	NUMBER	QTY	DESCRIPTION
-	161-9177	--	FENDER GP [A] (NOT SERVICED)
1	199-7855	1	BRACKET AS
2	199-7859	1	BRACKET AS
	CH8T-3612	4	NUT-WELD (M8X1.25 THD)
3	CH211-4423	1	PLUG
4	211-0174	1	FENDER AS (LH)
4A	213-4902	1	GUARD
4B	176-0997	1	COVER-LH
4C	176-0998	1	GASKET-LH
4D	176-0999	3	RIVET
5	211-0178	1	FENDER AS (RH)
	213-4902	1	GUARD
	176-0999	3	RIVET
	176-1001	1	COVER-RH
	176-1002	1	ASKET-RH
6	400024X1	8	BOLT (M8X1.25X45MM)
7	CH8C-0572	24	WASHER (8.8X25.5X2MM THK)
8	400227X1	4	BOLT (M8X1.25X16MM)
9	CH8C-0572	4	WASHER (8.8X25.5X2MM THK)
10	400341X1	12	BOLT (M8X1.25X25MM)

[A] PART OF 179-2180; 501811D1;
502936D1 BASE COMMON AR

00857779
PR: t05i29k58b0248

EXTENSION GP-FENDER - 186-2427

EAME ONLY

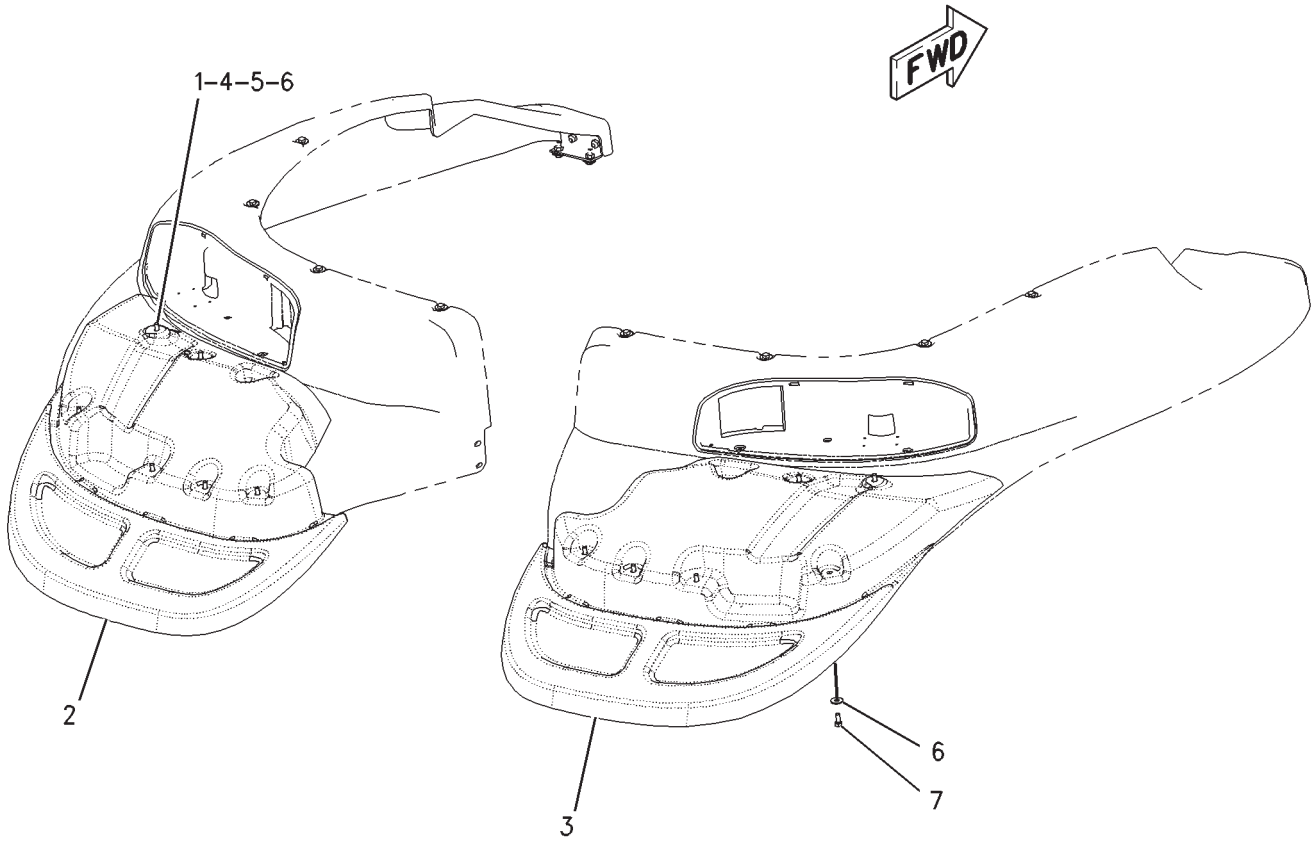

EXTENSION GP-FENDER - 186-2427

EAME ONLY

ITEM	NUMBER	QTY	DESCRIPTION
-	186-2427	--	EXTENSION GP-FENER [A] (NOT SERVICED)
1	400257X1	4	STUDBOLT (M8X1.25 THD)
2	211-0182	1	EXTENSION (LH)
3	211-0183	1	EXTENSION (RH)
4	400053X1	4	NUT (M8X1.25 THD)
5	CH7X-0613	4	WASHER-HARD (8.8X25.5X5MM THK)
6	CH8C-0572	12	WASHER (8.8X25.5X2MM THK)
7	400053X1	8	BOLT (M8X1.25X20MM)

[A] PART OF 179-2180 BASE COMMON AR

00887875
PR: t05i29k58b0249

FRAME GP - 179-1954
(MT835 & MT845)

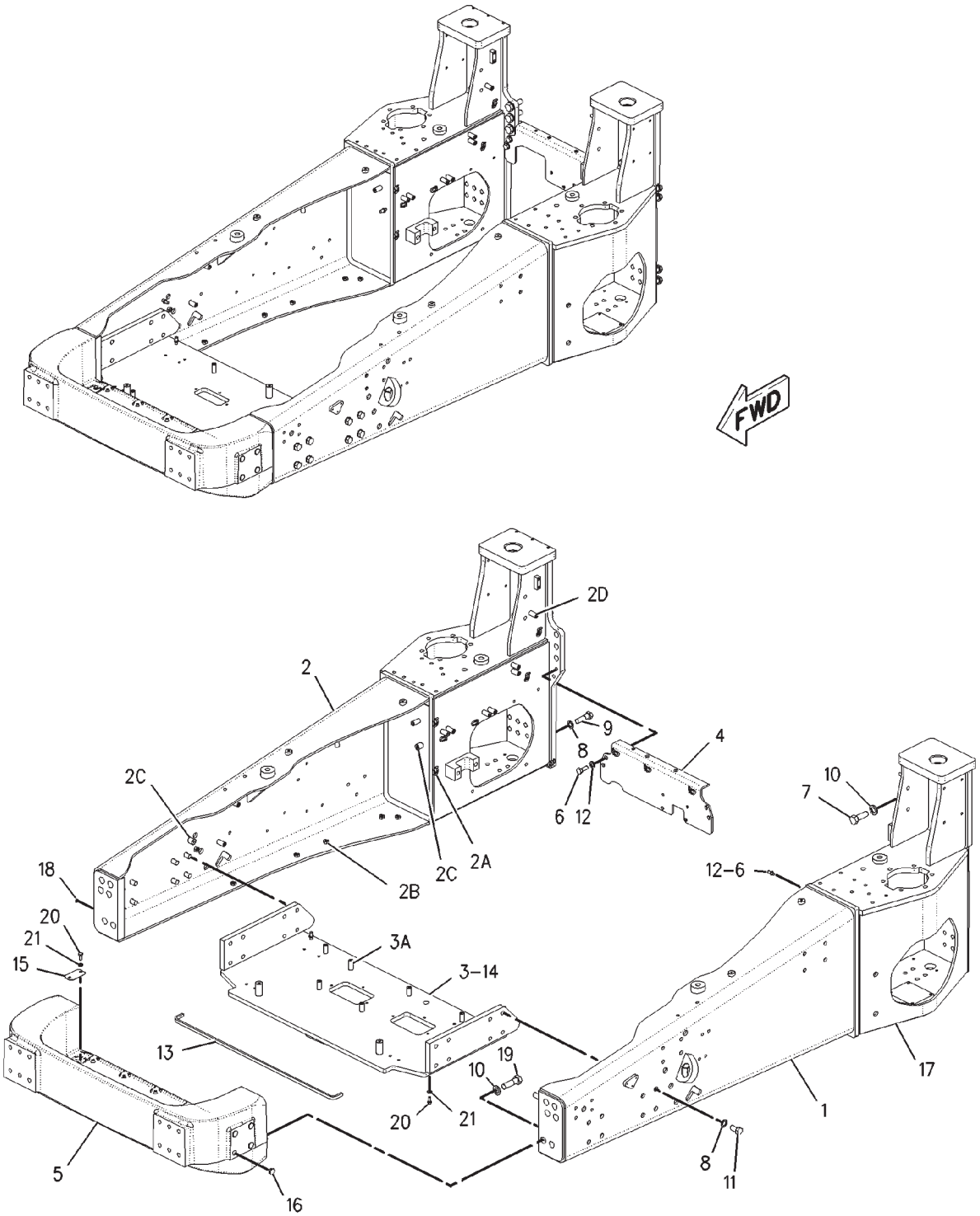

00897283

FRAME GP - 179-1954
(MT835 & MT845)

ITEM	NUMBER	QTY	DESCRIPTION
-	179-1954	--	FRAME GP [A] (NOT SERVICED)
1	183-4130	1	FRAME ASM-LH
	CH7T-1099	7	LINK
	CH7Y-8763	1	BOSS (M10X1.5-6HX30MM)
	CH8T-3490	5	NUT-WELD (M10X1.5)
	CH8T-3597	19	NUT-WELD (M12X1.75)
	CH8Y-3795	7	BOSS (M10X1.5X39MM)
	CH9R-2613	1	BOSS (M10X1.5)
	CH9R-2640	6	BOSS (M12X1.75)
	CH9R-2672	1	BOSS (M10X1.5)
2	183-4131	1	FRAME ASM-RH
	CH8T-3490	10	NUT-WELD (M10X1.5)
2A	CH7T-1099	8	LINK
2B	CH8T-3597	11	NUT-WELD (M12X1.75)
2C	CH9R-2640	2	BOSS
2D	CH8Y-3795	11	BOSS (M10X1.5X39MM)
3	183-4132	1	HOOK ASM-TOW
3A	CH8Y-3795	3	BOSS (M10X1.5X39MM)
	CH9R-2613	3	BOSS (M10X1.5X25MM)
	CH9R-2640	2	BOSS
4	183-4145	1	PLATE ASM
	CH7T-1099	3	LINK
	CH8T-3490	3	NUT-WELD (M10X1.5)
	CH8T-3597	2	NUT-WELD (M12X1.75)
	CH8T-3612	2	NUT-WELD (M8X1.25)
5	209-1366	1	SUPPORT
6	400191X1	4	BOLT (M16X2X40MM)
7	400197X1	12	BOLT (M24X3X70MM)
8	400080X1	40	WASHER-PLATED (22X35X3.5)
9	400122X1	24	BOLT (M20X2.5X70MM)
10	400081X1	24	WASHER-HARD (26X44X4)
11	400234X1	16	BOLT (M20X2.5X40MM)
12	400082X1	4	WASHER (17.5X30X3.5)
13	CH5P-5727	116	SEAL (CM)
14	209-6434	2	PLATE
15	209-6295	2	SCREEN
16	400091X1	10	PLUG (M24)
17	CH193-5915	28	PLUG (M12)
18	400289X1	6	PLUG (M7)
19	400134X1	12	BOLT (M24X3X80MM)
20	400039X1	4	BOLT (M10X1.5X25MM)
	400040X1	6	BOLT (M10X1.5X20MM)
21	400287X1	10	WASHER-HARD (11X21X2.5)

[A] PART OF 179-1953 CHASSIS AR-COM

00897283
PR: t05i29k58b0250

GRILL GP-RADIATOR - 158-5960

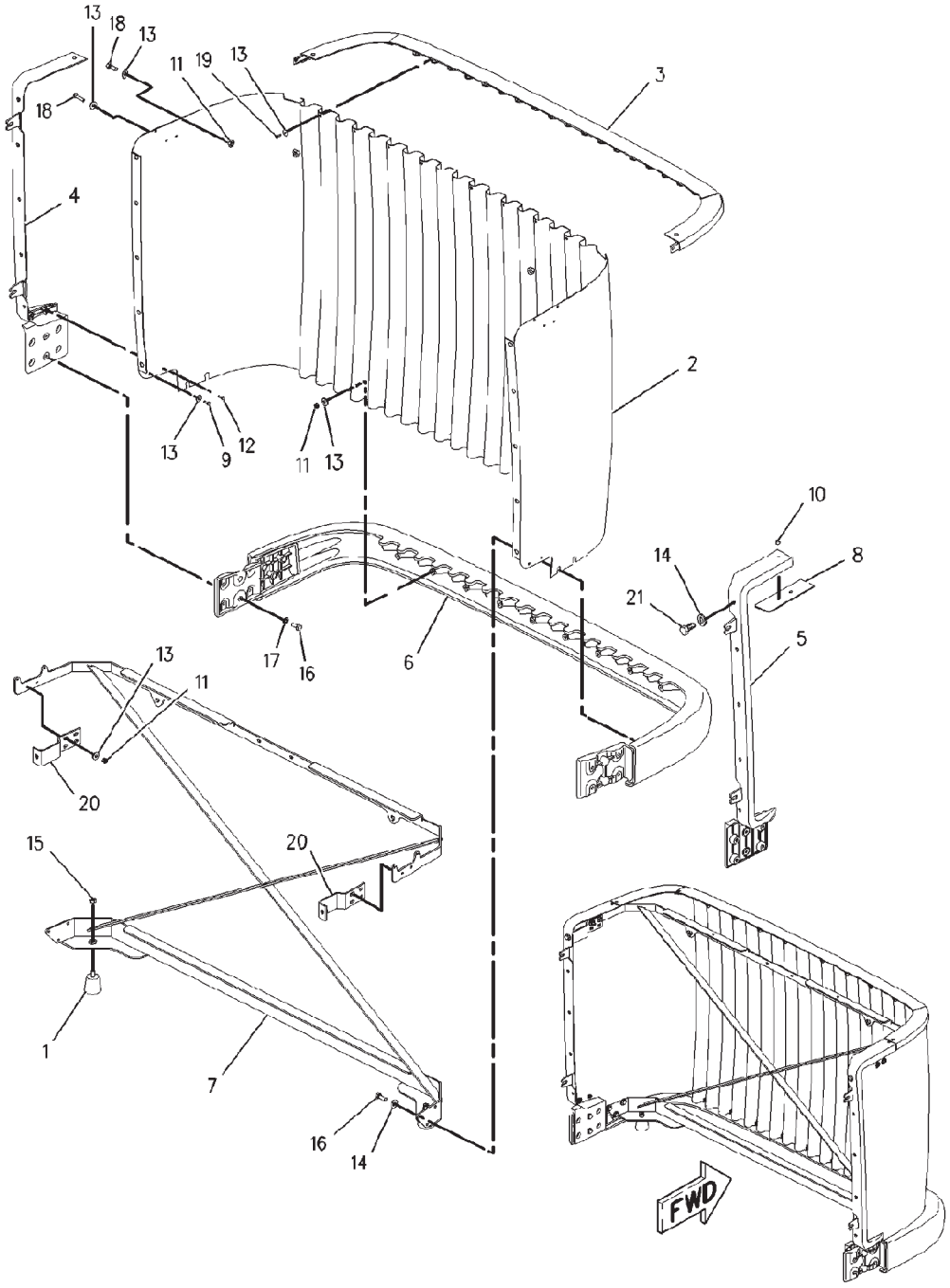

00857765

GRILL GP-RADIATOR - 158-5960

ITEM	NUMBER	QTY	DESCRIPTION
-	158-5960	--	GRILL GP-RADIATOR [A]
1	CH145-9545	2	BUMPER
2	158-5961	1	GRILL
3	158-5962	1	RETAINER ASM (UPPER)
4	176-0373	1	RETAINER ASM (LH)
5	176-0374	1	RETAINER ASM (RH)
6	186-0466	1	RETAINER ASM (LOWER)
7	192-6529	1	BAR ASM
	CH4K-9097	2	NUT-WELD (5/16-18)
	CH8T-3612	2	NUT-WELD (M8X1.25)
8	210-4351	2	PLATE
9	CH210-4352	2	SCREW-PAN HEAD
10	CH033-7291	4	RIVET-POP
11	CH129-3178	13	LOCKNUT (M6X1)
12	CH217-5909	2	SCREW-PAN HEAD (1/4-15X0.50 IN)
13	CH5P-4115	27	WASHER-HARD (7.2X19X2)
14	400599X1	8	WASHER-HARD (8.8X20.5X2)
15	400682X1	2	NUT (5/16-18)
16	400053X1	10	BOLT (M8X1.25X20MM)
17	400339X1	4	WASHER-HARD (8.8X16X2)
18	CH8C-6433	4	BOLT (M6X1X30MM)
19	CH8T-9501	8	SCREW (10-16X.75 IN)
20	210-4418	2	BRACKET AS
21	400341X1	2	BOLT (M8X1.25X25MM)

[A] PART OF 156-1313 HOOD & GUARD GP

00857765
PR: t05i29k58b0251

GUARD GP - 187-8609
EAME ONLY

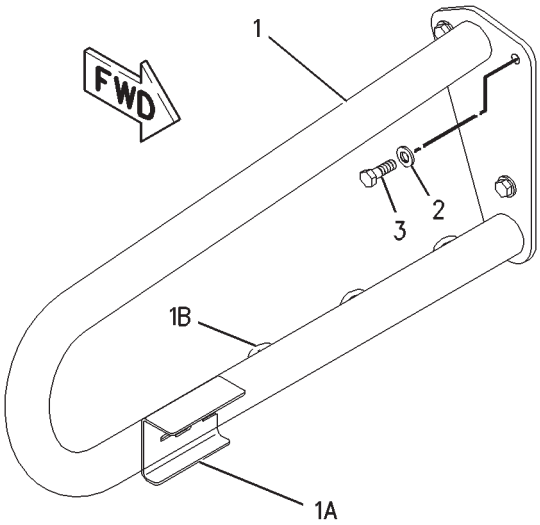

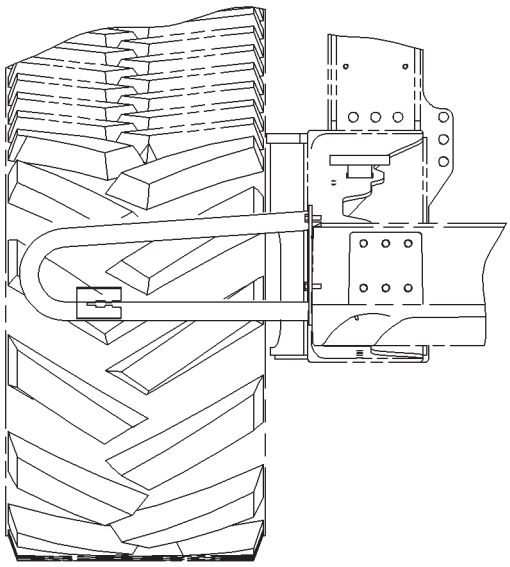

FRONT VIEW

GUARD GP - 187-8609
EAME ONLY

ITEM	NUMBER	QTY	DESCRIPTION
-	187-8609	--	GUARD GP [A] (NOT SERVICED)
1	187-8611	1	GUARD AS (INCLS 1A-1B)
1A		1	BRACKET [Z]
1B	7T-1099	3	LINK
2	400357X1	3	WASHER-HARD (M12X25.5X3MM THK)
3	400064X1	3	BOLT (M12X1.75X35MM)

[A] PART OF 179-2180 BASE COMMON AR
[Z] NOT SERVICED SEPARATELY

00857946
PR: t05i29k58b0252

GUARD GP-BOTTOM - 185-8849

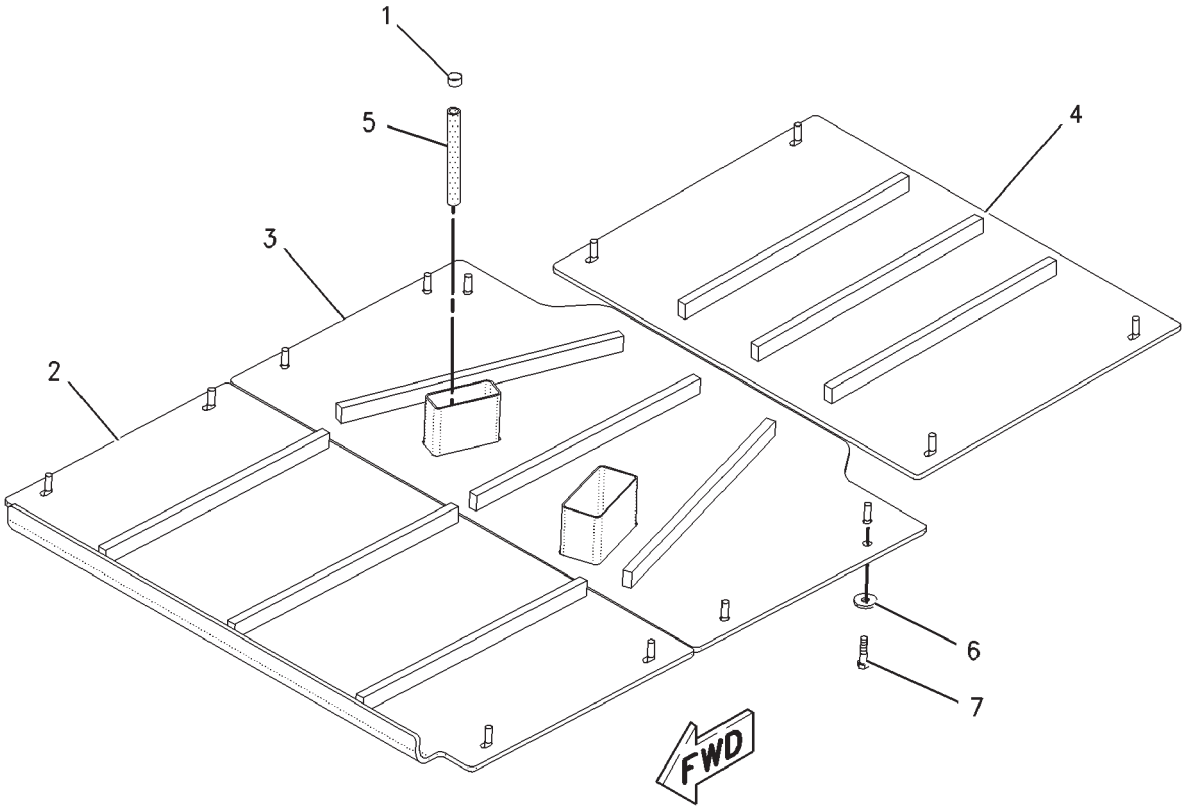

00890678

GUARD GP-BOTTOM - 185-8849

ITEM	NUMBER	QTY	DESCRIPTION
-	502758D1	--	GUARD GP-BOTTOM (FIELD INSTALLED)
-	185-8849	--	GUARD GP-BOTTOM [A][B] (NOT SERVICED, ORDER FIELD INSTALLED)
1	400108X1	1	CLAMP-HOSE
2	192-3042	1	GUARD ASM (FRONT)
3	196-9864	1	GUARD ASM (MIDDLE)
4	196-9866	1	GUARD AS (REAR)
	CH8T-3597	3	NUT-WELD (M12X1.75)
5	CH210-2265	1	HOSE (19CM)
6	CH7X-0618	14	WASHER-HARD (13.5X40X5)
7	400057X1	14	BOLT (M12X1.75X50MM)

[A] PART OF 502758D1 GUARD GP
[B] THIS GROUP CANNOT BE USED WITH 197-9558 AUX FUEL TANK AR.

00890678
PR: t05i29k58b0253

GUARD GP-BOTTOM - 200-8826

FOR USE WITH 197-8558 AUX FUEL TANK AR

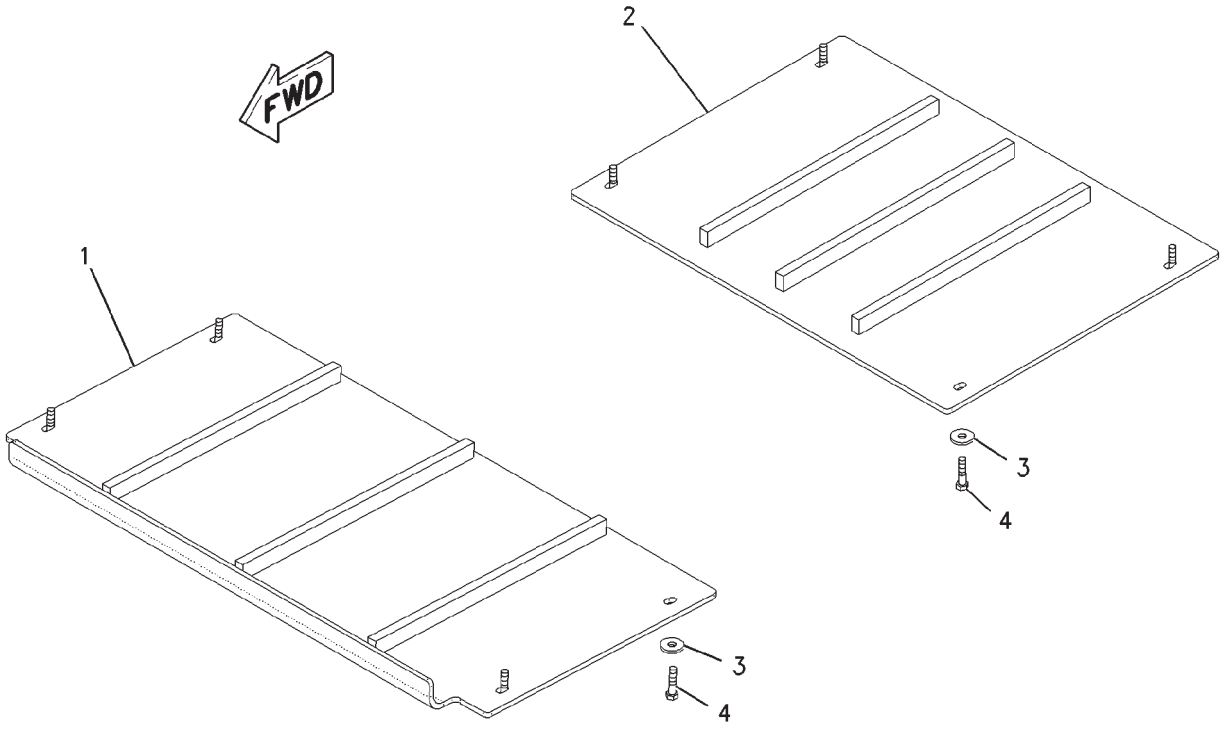

00891867

GUARD GP-BOTTOM - 200-8826

FOR USE WITH 197-8558 AUX FUEL TANK AR

ITEM	NUMBER	QTY	DESCRIPTION
-	502761D1	--	KIT/GUARD GP-BOTTOM (FIELD INSTALLED)
-	200-8826	--	GUARD GP-BOTTOM [A] (NOT SERVICED, ORDER FIELD INSTALLED)
1	192-3042	1	GUARD ASM (FRONT)
2	196-9866	1	GUARD ASM (REAR)
	CH8T-3597	3	NUT-WELD (M12X1.75)
3	CH7X-0618	8	WASHER-HARD (13.5X40X5)
4	400057X1	8	BOLT (M12X1.75X50MM)

[A] PART OF 502761D1 GUARD GP

00891867
PR: t05i29k58b0254

GUARD GP-BOTTOM - 213-2481
REAR

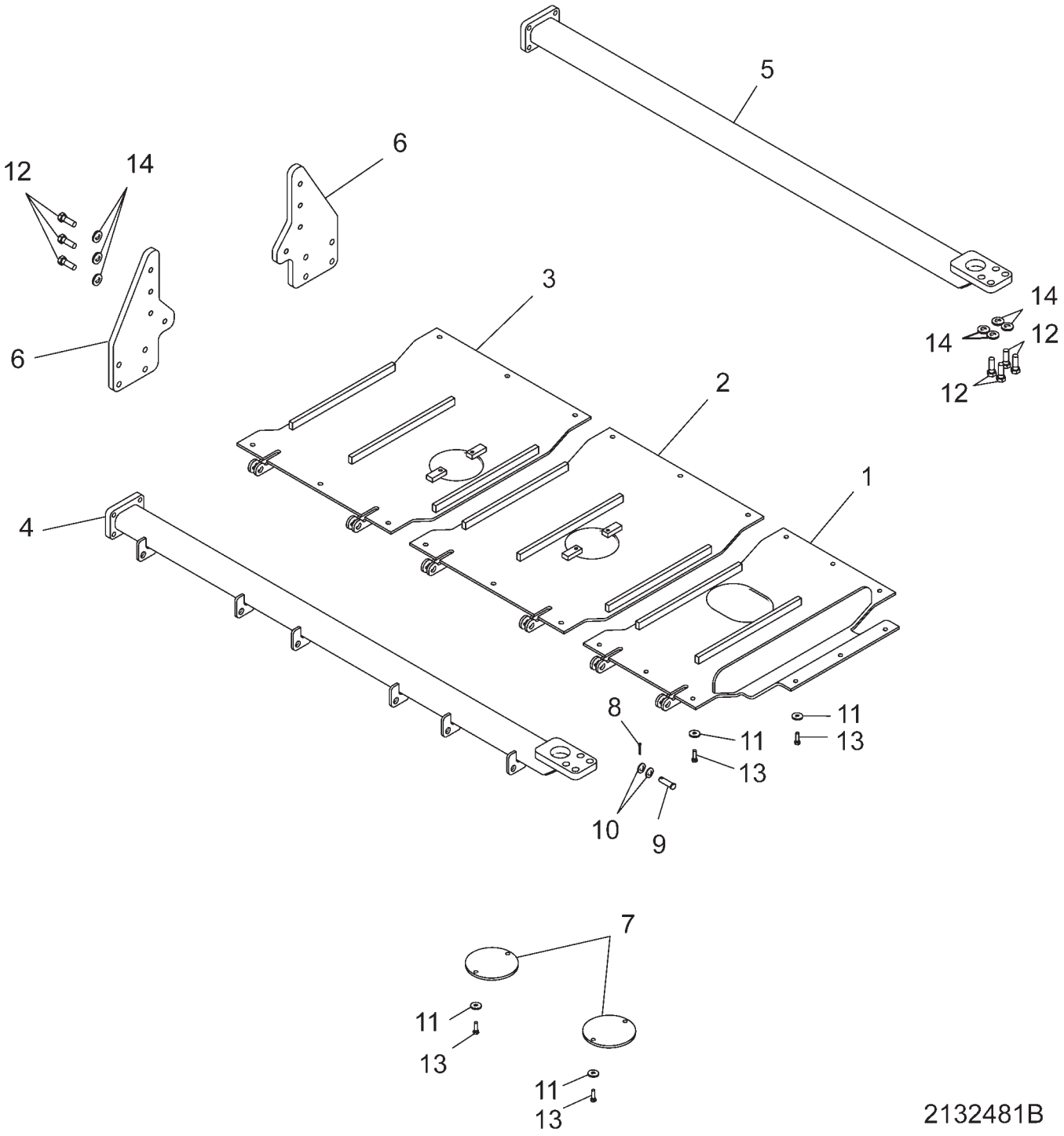

GUARD GP-BOTTOM - 213-2481
REAR

ITEM	NUMBER	QTY	DESCRIPTION
-	502764D1	--	KIT/GUARD-BOTTOM-REAR (FIELD INSTALLED)
-	213-2481	--	GUARD GP-BOTTOM-REAR [A] (NOT SERVICED, ORDER FIELD INSTALLED)
1	213-2500	1	GUARD AS-BOTTOM
2	213-2501	1	GUARD AS-BOTTOM
3	213-2502	1	GUARD AS-BOTTOM
4	213-2503	1	SUPPORT AS-RH
5	213-2504	1	SUPPORT AS-LH
6	213-2505	2	SUPPORT
7	213-2506	2	PLATE
8	CH3B-4629	6	COTTER PIN 4.76 DIAX 38.1
9	CH4J-2036	6	PIN
10	CH7X-0594	12	WASHER HARD
11	CH7X-0618	25	WASHER HARD 13.5IDX40ODX5 ZNDI
12	400031X1	24	BOLT-M20X2.5X60 ZNDI HHD 10.9
13	400050X1	25	BOLT-M12X1.75X40 ZNDI HHD 10.9
14	CH8T-5439	24	WASHER- HARD

[A] PART OF 502764D1 GUARD GP

2132481B
PR: t05i29k58b0255

GUARD GP-POWER TRAIN - 189-5805
(MT835 & MT845)

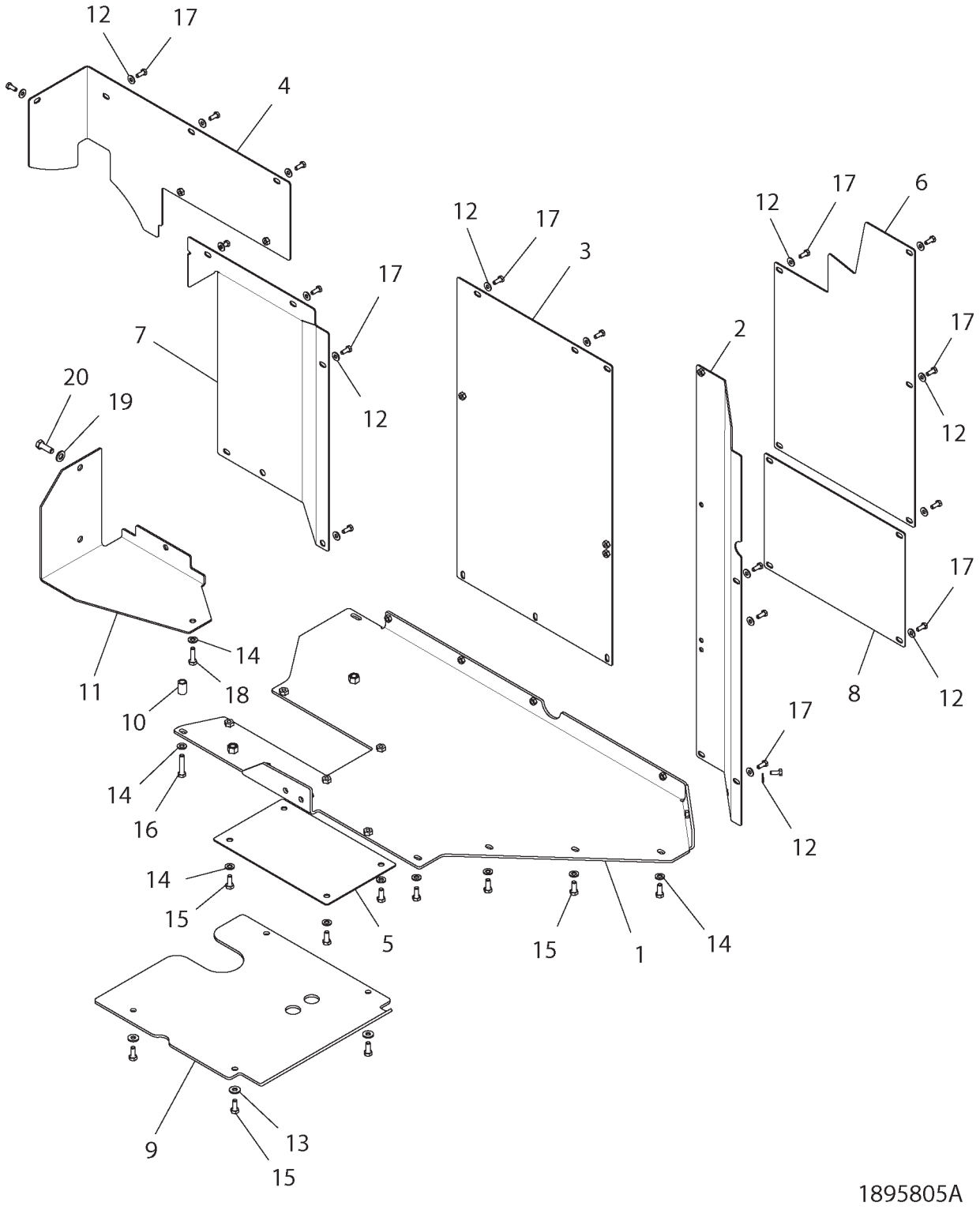

GUARD GP-POWER TRAIN - 189-5805
(MT835 & MT845)

ITEM	NUMBER	QTY	DESCRIPTION
-	189-5805	--	GUARD GP-POWER TRAIN [A] (NOT SERVICED)
1	189-4286	1	GUARD ASM
	CH8T-3597	2	NUT-WELD (M12X1.75)
	CH8T-3490	8	NUT-WELD (M10X1.5)
	CH8T-3612	5	NUT-WELD (M8X1.25)
2	189-4287	1	GUARD ASM
	CH8T-3612	4	NUT-WELD (M8X1.25)
3	189-4288	1	GUARD AS
	CH8T-3612	3	NUT-WELD (M8X1.25)
4	189-4289	1	GUARD ASM
	CH8T-3612	2	NUT-WELD (M8X1.25)
5	195-1004	1	COVER
6	195-1016	1	COVER
7	209-9231	1	GUARD
8	209-9232	1	COVER
9	210-7526	1	PLATE
10	CH213-4497	1	SPACER (12.75X19.1X29)
11	224-6641	1	PLATE AS
12	400599X1	24	WASHER-HARD (8.8X20.5X2)
13	CH7X-7729	4	WASHER (11X25X3)
14	400287X1	10	WASHER-HARD (11X21X2.5)
15	400039X1	12	BOLT (M10X1.5X25MM)
16	400226X1	1	BOLT (M10X1.5X50MM)
17	400053X1	24	BOLT (M8X1.25X20MM)
18	400059X1	1	BOLT (M10X1.5X35MM)
19	400357X1	2	WASHER (M12X25.5X3)
20	400064X1	2	BOLT (M12X1.75X35MM)

[A] PART OF 179-1953 CHASSIS AR

1895805A
PR: t05i29k58b0256

HANDHOLD GP - 203-9179
INNER

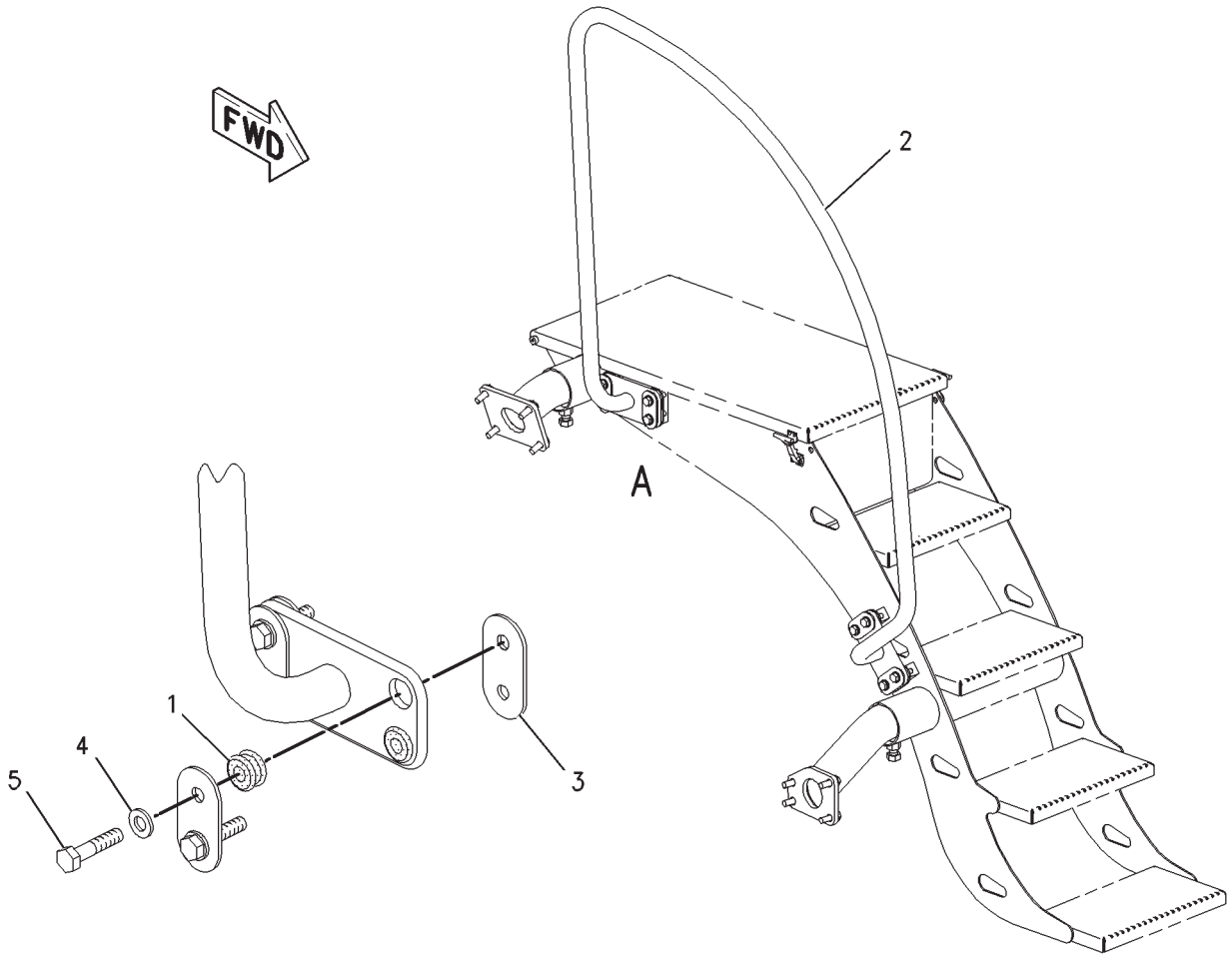

00810595

HANDHOLD GP - 203-9179
INNER

ITEM	NUMBER	QTY	DESCRIPTION
-	502762D1	--	HANDHOLD GP (FIELD INSTALLED)
-	502772D1	--	HANDHOLD GP (FACTORY) (NOT SERVICED, ORDER FIELD INSTALLED)
-	203-9179	--	HANDHOLD GP [A] (REF ONLY) (NOT SERVICED, ORDER FIELD INSTALLED)
1	CH6N-6984	8	MOUNT
2	203-9183	1	HANDHOLD ASM
3	203-9200	8	PLATE
4	400287X1	8	WASHER-HARD (11X21X2.5)
5	400052X1	8	BOLT (M10X1.5X45MM)

[A] PART OF 502762D1 & 502772D1
HANDHOLD GP

00810595
PR: t05i29k58b0257

TOW CABLE GP - 500039D1

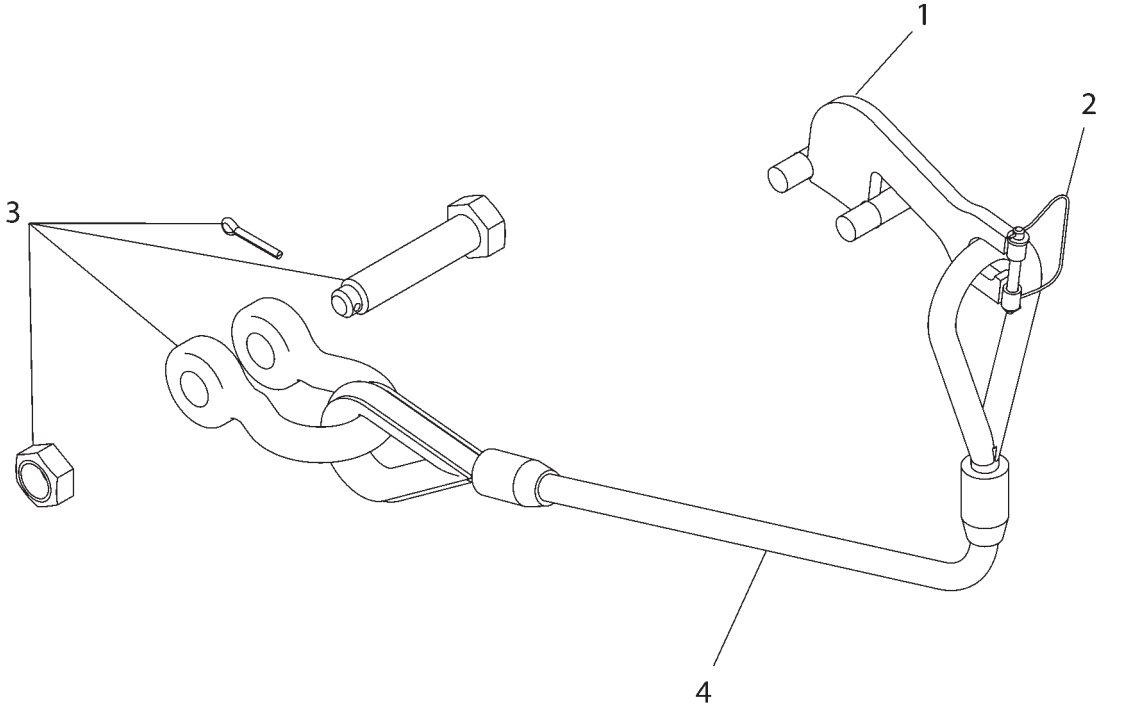

500039DA

TOW CABLE GP - 500039D1

ITEM	NUMBER	QTY	DESCRIPTION
-	502919D1	--	KIT-CABLE GP-TOW (FIELD INSTALLED)
-	500039D1	--	CABLE GP-TOW [A]
1	500120D1	1	BRACKET AS
2	500124D1	1	HITCH PIN AS
3	500125D1	1	SHACKLE AS
4	500126D1	1	CABLE AS

[A] PART OF 502919D1 KIT-TOW CABLE GP;
500033D1; 500034D1; 500035D1;
500037D1 BASE UNIT AR

500039DA
PR: t05i29k58b0258

HOOD & GUARD GP - 156-1313
ROW & SPECIAL

REFER TO ALL ILLUSTRATIONS OF
THIS GROUP FOR AUXILIARY VIEWS

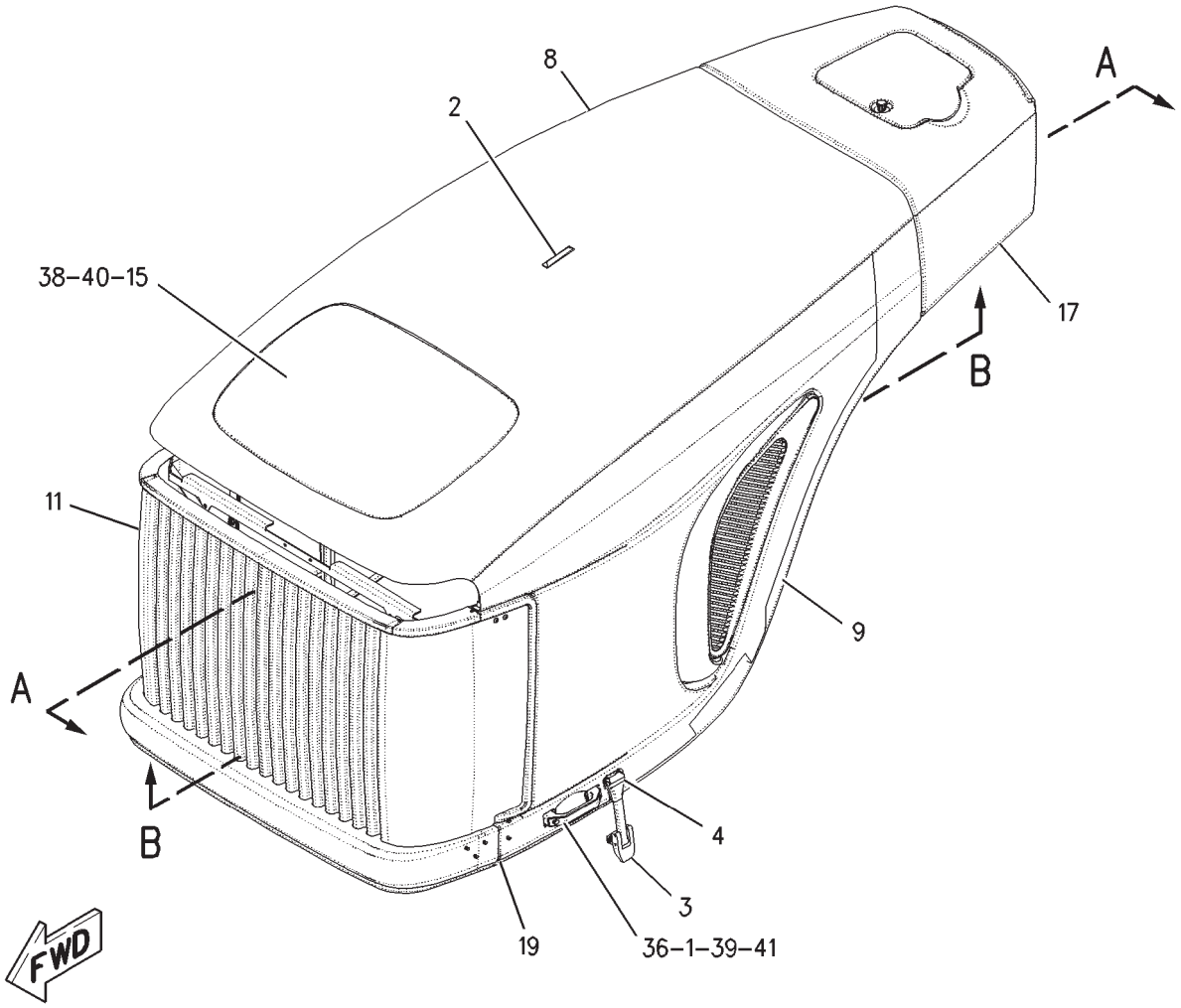

HOOD & GUARD GP - 156-1313
ROW & SPECIAL

ITEM	NUMBER	QTY	DESCRIPTION
-	156-1313	--	HOOD & GUARD GP [A] (NOT SERVICED)
1	400162X1	2	BOLT-SOCKET HEAD (M8X1.25X50 MM)
2	CH100-4036	1	MARKER-HOOD
3	CH113-8880	2	LATCH ASM
4	CH114-5793	2	KEEPER
8	158-5950	1	HOOD AS
9	158-5952	1	PANEL AS (LH)
	179-4207	1	INSERT
11	158-5960	1	GRILL GP-RADIATOR
			(SEE BREAKDOWN FOR COMPONENTS)
15	188-0514	1	GRILL (TOP)
17	190-5943	1	COVER GP-ACCESS
			(SEE BREAKDOWN FOR COMPONENTS)
19	501148D1		SEAL (GRILL) (3015MM)
36	400115X1	1	HANDLE
38	CH129-3178	60	LOCKNUT (M6X1 THD)
39	CH131-3540	12	LOCKNUT
40	CH5P-4115	51	WASHER-HARD (7.2X19X2MM THK)
41	400599X1	50	WASHER-HARD (8.8X20.5X2MM THK)

[A] PART OF 179-1952 BASE AR-COMMON

00887940
PR: t05i29k58b0259

HOOD & GUARD GP - 156-1313
ROW & SPECIAL

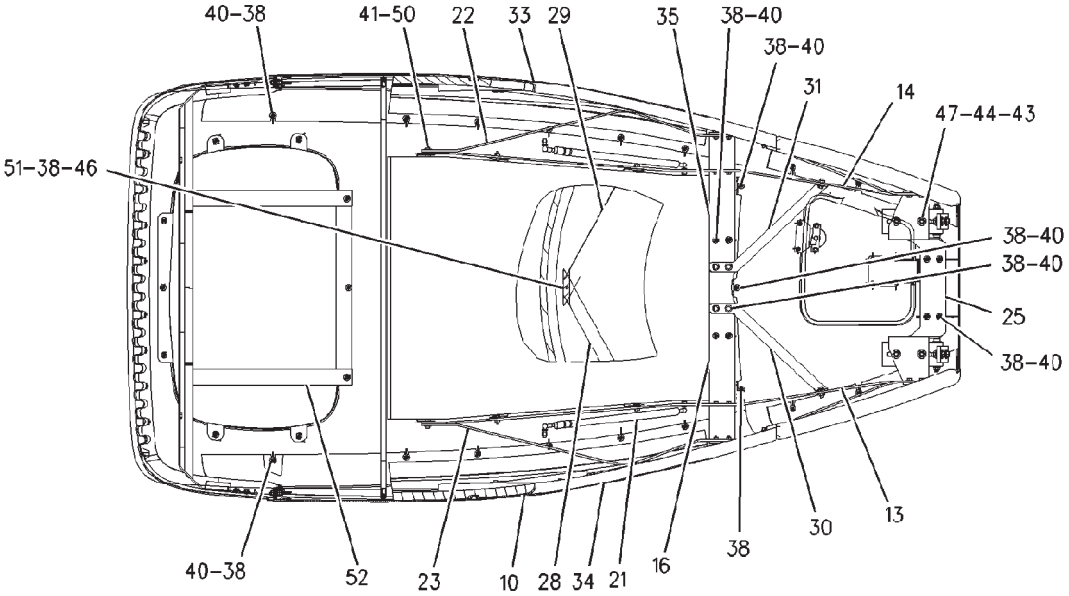

SECTION B-B

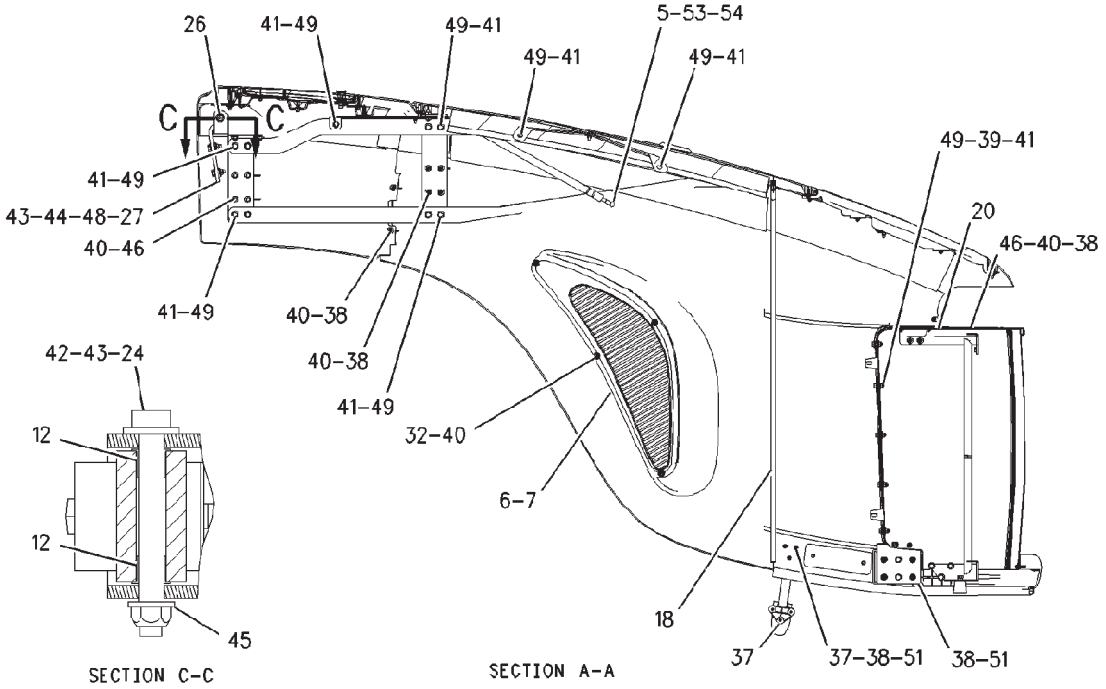

SECTION C-C

SECTION A-A

HOOD & GUARD GP - 156-1313
ROW & SPECIAL

ITEM	NUMBER	QTY	DESCRIPTION
-	156-1313	--	HOOD & GUARD GP [A] (NOT SERVICED)
5	-----	--	NOT USED
6	158-5934	1	GRILL LOWER (LH)
7	158-5935	1	GRILL LOWER (RH)
10	158-5953	1	PANEL ASM (RH)
	179-4207	1	INSERT (M6)
12	400104X1	4	BEARING
13	188-0452	1	PLATE (RH)
14	188-0453	1	PLATE (LH)
16	188-0564	1	BRACKET
18	192-6516	1	SEAL (HOOD) (LH)
20	192-6518		SEAL (HOOD) (LH)
21	231-6106	2	STRUT-GAS
22	209-0359	1	BRACKET
23	209-0361	1	BRACKET
24	400013X1	2	BOLT-SHOULDER (M10X1.5X96)
25	209-0364	1	BRACKET
26	209-0373	2	BRACKET
27	209-0376	2	ANGLE ASM
28	209-3146	1	BRACKET
29	209-3147	1	BRACKET
30	209-3384	1	BRACKET
31	209-3385	1	BRACKET
32	CH217-5909	8	SCREW-PAN HEAD
33	210-4413	1	INSULATION (LH)
34	210-4414	1	INSULATION (RH)
35	210-4415	1	INSULATION (TOP)
37	CH123-4950	12	SCREW-PAN HEAD (M6X1X16MM)
38	CH129-3178	60	LOCKNUT (M6X1 THD)
39	CH131-3540	12	LOCKNUT
40	CH5P-4115	51	WASHER-HARD (7.2X19X2MM THK)
41	400599X1	50	WASHER-HARD (8.8X20.5X2MM THK)
42	400277X1	2	WASHER-HARD (13.5X25.5X3MM THK)
43	CH6V-7744	10	LOCKNUT (M10X1.5 THD)
44	CH7X-7729	16	WASHER (11X25X3MM THK)
45	400287X1	6	WASHER-HARD (11X21X2.5MM THK)
46	400221X1	11	BOLT (M6X1X20MM)
47	400058X1	4	BOLT (M10X1.5X30MM)
48	400059X1	4	BOLT (M10X1.5X35MM)
49	400341X1	36	BOLT (M8X1.25X25MM)
50	400245X1	2	BOLT (M8X1.25X30MM)
51	400310X1	16	WASHER (6.6X12X2MM THK)
52	223-5887	2	BRACKET
53	400287X1	4	WASHER-HARD (11X21X2.5)
54	WR522218	4	NUT (M8X1.25)

[A] PART OF 179-1952 BASE AR-COMMON

00887941
PR: t05i29k58b0260

HOOD & GUARD GP - 161-9173

1 OF 2
EAME ONLY

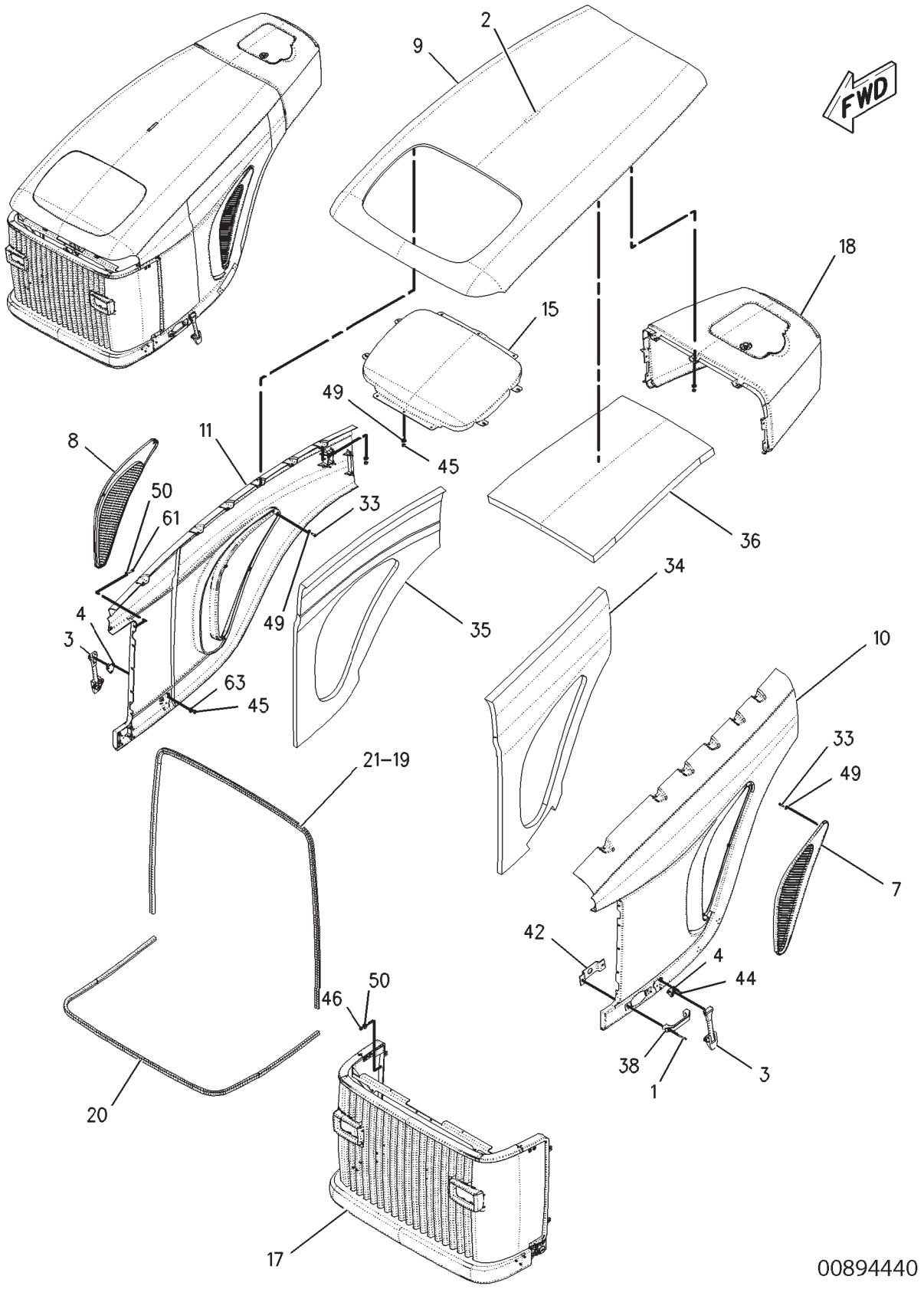

HOOD & GUARD GP - 161-9173

1 OF 2
EAME ONLY

ITEM	NUMBER	QTY	DESCRIPTION
-	161-9173	--	HOOD & GUARD GP [A] (NOT SERVICED)
1	400162X1	2	BOLT-SOCKET HEAD (M8X1.25X50 MM)
2	CH100-4036	1	MARKER-HOOD
3	CH113-8880	2	LATCH AS
4	CH114-5793	2	KEEPER
7	158-5934	1	GRILL AS-LWR (LH)
8	158-5935	1	GRILL AS-LWR (RH)
9	158-5950	1	HOOD AS
10	158-5952	1	PANEL AS (LH)
11	158-5953	1	PANEL AS (RH)
15	188-0514	1	GRILL (TOP)
17	188-0568	1	GRILL AS
18	190-5943	1	COVER GP-ACCESS
			(SEE BREAKDOWN FOR COMPONENTS)
19	192-6516	1	SEAL (HOOD-LH) (3430MM)
20	501148D1	1	SEAL (GRILL)
21	CH5P-9205	1	SEAL (HOOD-UPPER) (1469MM)
			(ORDER BY THE METER)
33	CH217-5909	8	SCREW-PAN HEAD
34	210-4413	1	INSULATION (LH)
35	210-4414	1	INSULATION (RH)
36	210-4415	1	INSULATION (TOP)
38	400115X1	1	HANDLE
42	216-6429	1	BRACKET AS
	CH8T-3612	2	NUT-WELD (M8X1.25 THD)
44	CH123-4950	12	SCREW-PAN HEAD (M6X1X16MM)
45	CH129-3178	60	LOCKNUT (M6X1 THD)
46	CH131-3540	10	LOCKNUT
49	CH5P-4115	51	WASHER-HARD (7.2X19X2MM THK)
50	400599X1	48	WASHER-HARD (8.8X20.5X2MM THK)
61	400341X1	36	BOLT (M8X1.25X25MM)
63	400310X1	16	WASHER (6.6X12X2MM THK)

[A] PART OF 179-2180 BASE COMMON AR

00894440
PR: t05i29k58b0261

HOOD & GUARD GP - 161-9173

2 OF 2
EAME ONLY

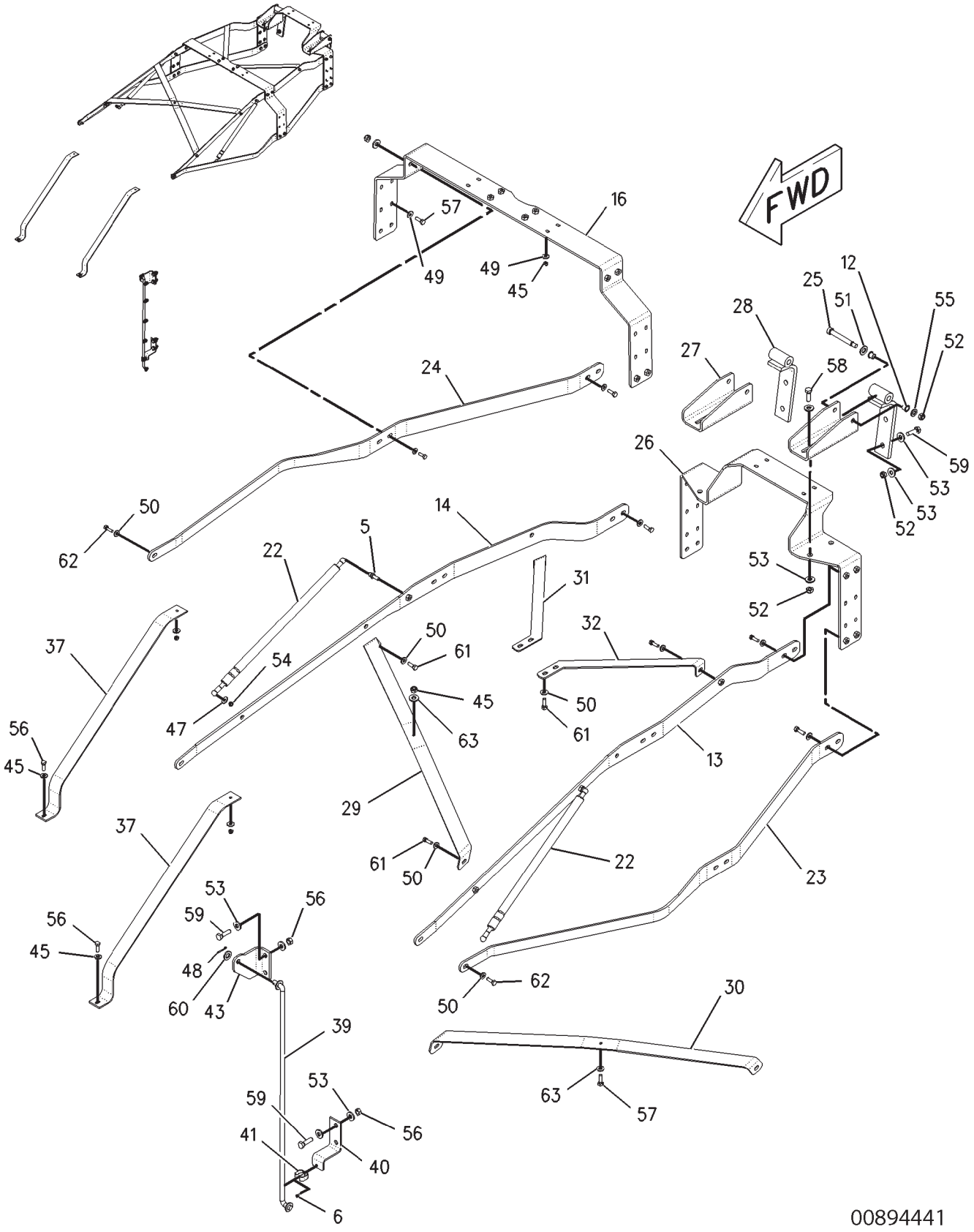

00894441

HOOD & GUARD GP - 161-9173

2 OF 2
EAME ONLY

ITEM	NUMBER	QTY	DESCRIPTION
-	161-9173	--	HOOD & GUARD GP [A] (NOT SERVICED)
5			NOT USED
6	400140X1	1	BOLT-SOCKET HEAD (M4X0.7X10MM)
12	400104X1	4	BEARING
13	188-0452	1	PLATE AS (RH)
14	188-0453	1	PLATE AS (LH)
	CH8T-3612	4	NUT-WELD (M8X1.25 THD)
16	188-0564	1	BRACKET AS
	CH8T-3612	12	NUT-WELD (M8X1.25 THD)
22	231-6106	2	SPRING-GAS
23	209-0359	1	BRACKET
24	209-0361	1	BRACKET
25	400013X1	2	BOLT (M10X1.5X96)
26	209-0364	1	BRACKET AS
	CH8T-3612	8	NUT-WELD (M8X1.25 THD)
27	209-0373	2	BRACKET
28	209-0376	2	ANGLE AS
29	209-3146	1	BRACKET
30	209-3147	1	BRACKET
31	209-3384	1	BRACKET
32	209-3385	1	BRACKET
37	223-5887	2	BRACKET
39	216-6425	1	ROD AS
40	216-6426	1	BRACKET AS
41	CH216-6428	1	CLIP
43	216-6430	1	SUPPORT
45	CH129-3178	60	LOCKNUT (M6X1 THD)
47			NOT USED
48	CH3B-4611	1	PIN-COTTER
49	CH5P-4115	61	WASHER-HARD (7.2X19X2MM THK)
50	400599X1	48	WASHER-HARD (8.8X20.5X2MM THK)
51	400277X1	2	WASHER-HARD (M12X25.5X3MM THK)
52	CH6V-7744	10	LOCKNUT (M10X1.5 THD)
53	CH7X-7729	24	WASHER (11X25X3MM THK)
54	WR522218	2	NUT (M10X1.5 THD)
55			NOT USED
56	WR522218	4	NUT (M10X1.5 THD)
57	400221X1	11	BOLT (M6X1X20MM)
58	400058X1	4	BOLT (M10X1.5X30MM)
59	400059X1	8	BOLT (M10X1.5X35MM)
60	400357X1	1	WASHER-HARD (M12X25.5X3MM THK)
61	400341X1	36	BOLT (M8X1.25X25MM)
62	400245X1	2	BOLT (M8X1.25X30MM)
63	400310X1	16	WASHER (6.6X12X2MM THK)

[A] PART OF 179-2180 BASE COMMON AR

BRACE GP-SAFETY - 222-9033
HOOD
ROW & SPECIAL

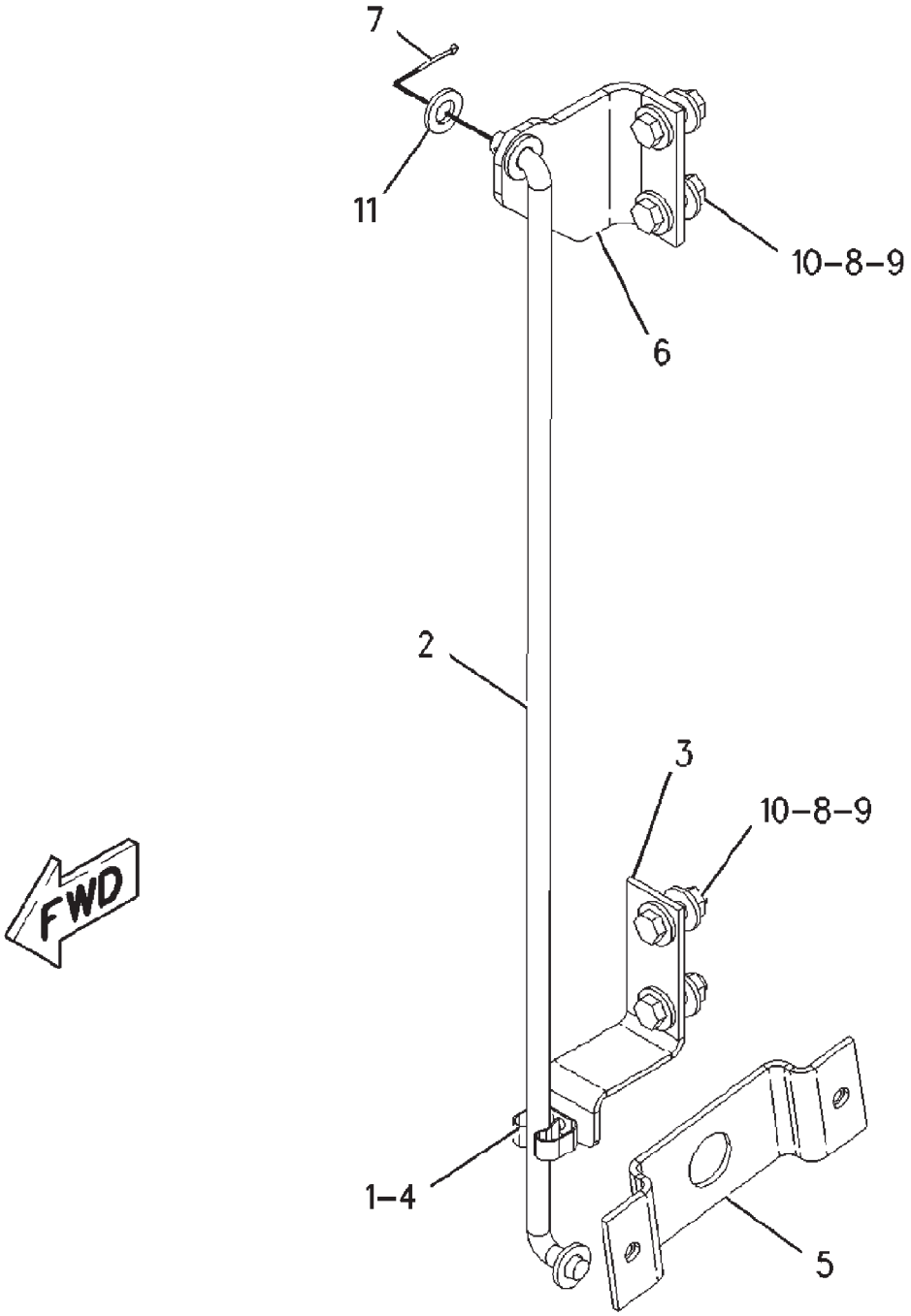

00899424

BRACE GP-SAFETY - 222-9033

HOOD
ROW & SPECIAL

ITEM	NUMBER	QTY	DESCRIPTION
-	222-9033	--	BRACE GP-SAFETY
1	400140X1	1	BOLT-SOCKET HEAD (M4X0.7X10MM)
2	216-6425	1	ROD ASM
	400277X1	2	WASHER-HARD
3	216-6426	1	BRACKET ASM
4	CH216-6428	1	CLIP
5	216-6429	1	BRACKET ASM
	CH8T-3612	2	NUT-WELD (M8X1.25)
6	216-6430	1	SUPPORT
7	CH3B-4611	1	PIN-COTTER
8	CH7X-7729	8	WASHER (11X25X3)
9	WR522218	4	NUT (M10X1.5)
10	400059X1	4	BOLT (M10X1.5X35MM)
11	400357X1	1	WASHER-HARD (M12X25.5X3)

00899424
PR: t05i29k58b0263

KIT-MOUNTING - 208-7698
FIRE EXTINGUISHER
ROW & SPECIAL

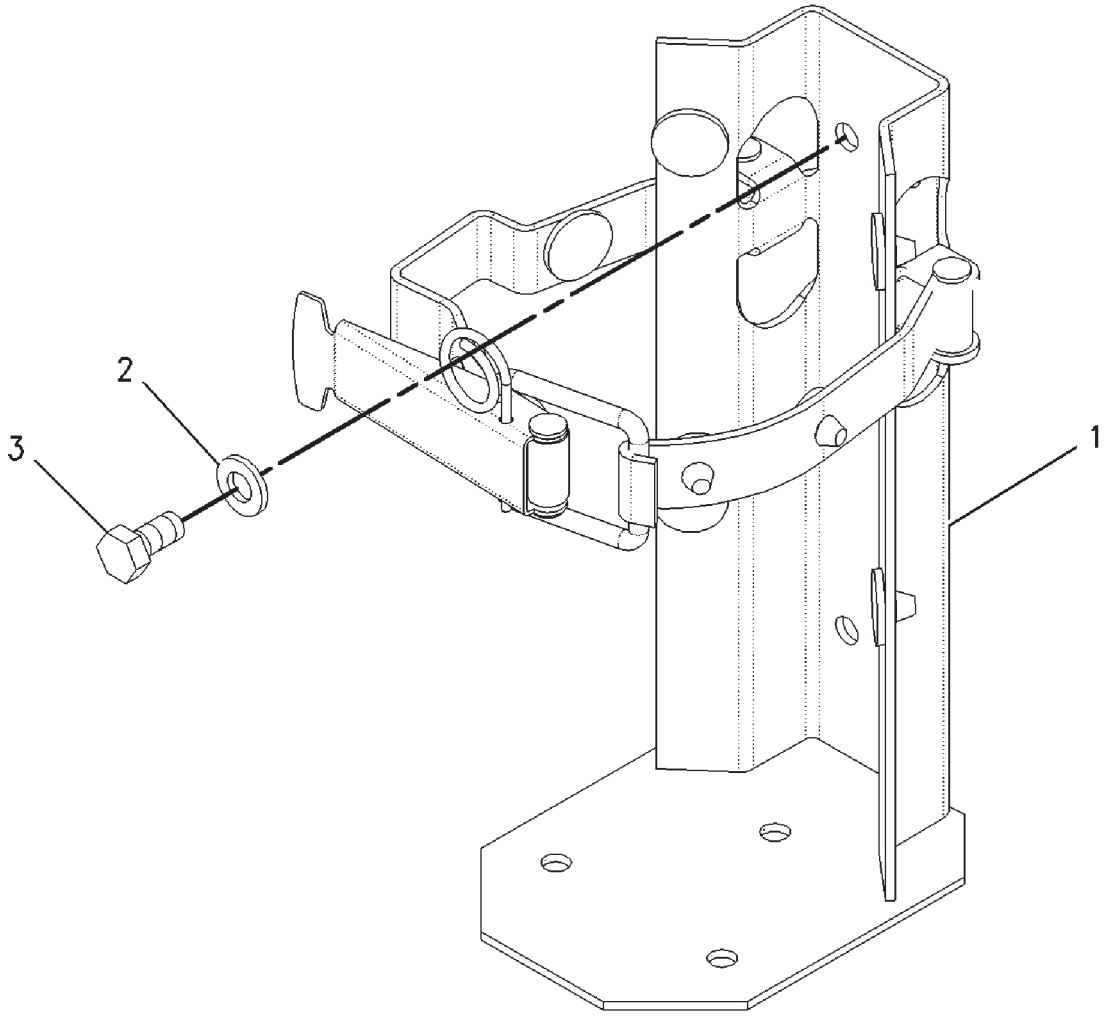

00888925

KIT-MOUNTING - 208-7698

FIRE EXTINGUISHER
ROW & SPECIAL

ITEM	NUMBER	QTY	DESCRIPTION
-	208-7698	--	KIT MOUNTING
1	500505D1	1	BRACKET
2	400339X1	4	WASHER-HARD (8.8X16X2)
3	400053X1	4	BOLT (M8X1.25X20MM)

00888925
PR: t05i29k58b0264

MOUNTING GP-WITH FIRE EXTINGUISHER

501785D1
EAME ONLY

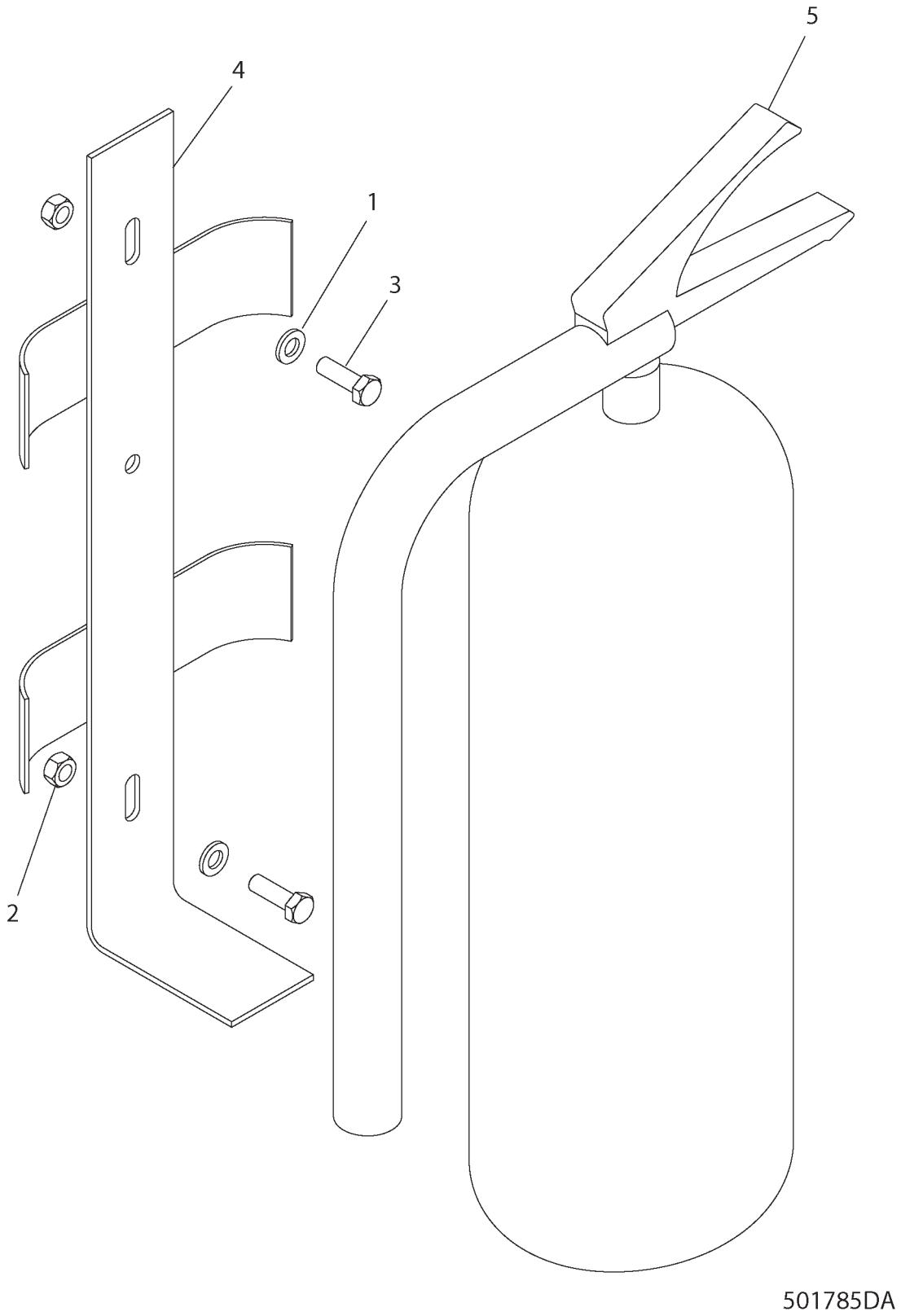

MOUNTING GP-WITH FIRE EXTINGUISHER

501785D1
EAME ONLY

ITEM	NUMBER	QTY	DESCRIPTION
-	501785D1	--	MOUNTING GP-FIRE EXTINGUISHER
1	400339X1	2	WASHER-HARD
2	400340X1	2	NUT
3	400341X1	2	BOLT-HEX HD
4	501775D1	1	BRACKET-FIRE EXTG
5	501785D1	1	EXTENGUISHER-FIRE

501785DA
PR: t05i29k58b0265

MOUNTING GP-CAB - 162-4112

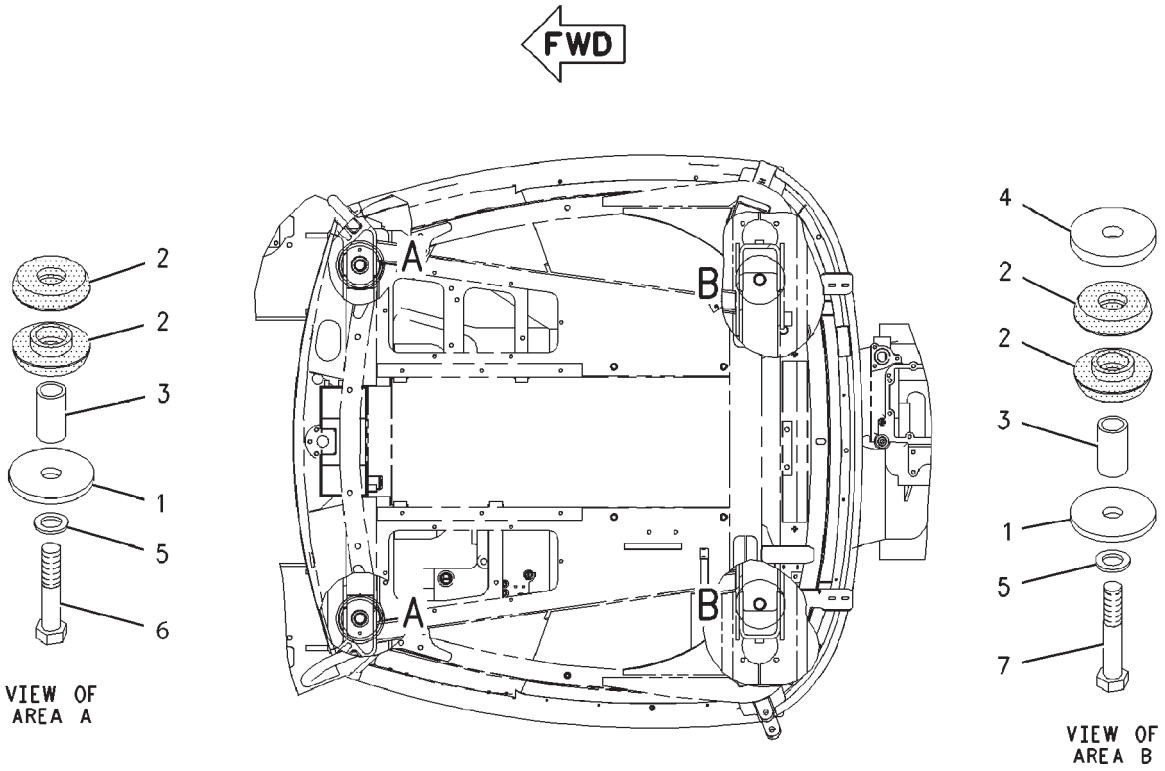

TOP VIEW

00850697

MOUNTING GP-CAB - 162-4112

ITEM	NUMBER	QTY	DESCRIPTION
-	162-4112	--	MOUNTING GP-CAB [A] (NOT SERVICED)
1	9U-0512	4	WASHER (12.0)
2	117-8131	8	MOUNT
3	CH144-2179	4	SLEEVE
4	CH192-5173	2	PLATE
5	CH7X-0593	4	WASHER-HARD (34X57X6)
6	400199X1	2	BOLT (M30X3.5X160)
7	400200X1	2	BOLT (M30X3.5X180)

[A] PART OF 179-1953 CHASSIS AR

00850697
PR: t05i29k58b0266

MOUNTING GP-BODY - 158-5925

LICENSE PLATE
EAME ONLY

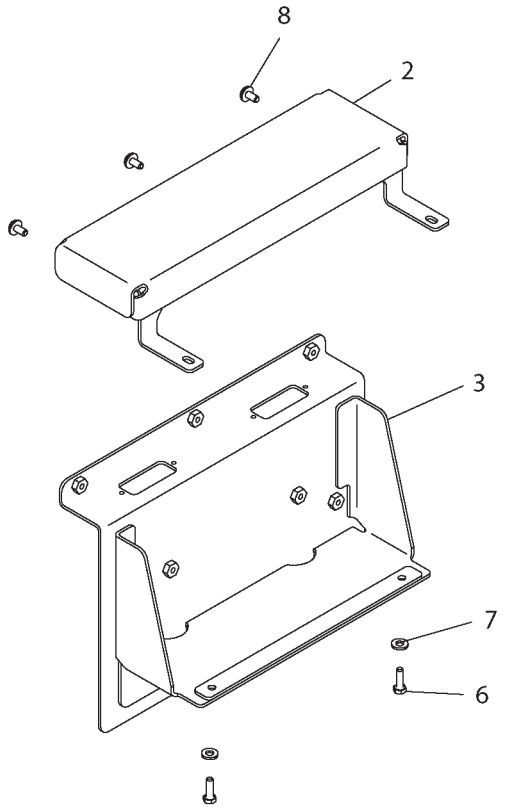

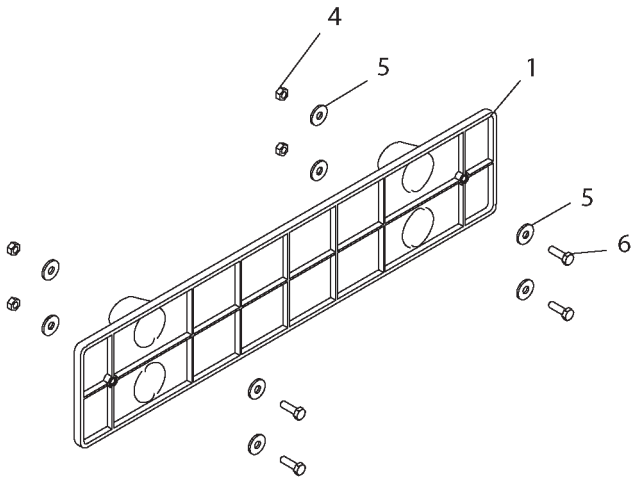

1585925A

MOUNTING GP-BODY - 158-5925

LICENSE PLATE
EAME ONLY

ITEM	NUMBER	QTY	DESCRIPTION
-	158-5925	--	MOUNTING GP-LICENSE PLATE [A] (NOT SERVICED)
1	177-7107	1	PLATE AS.-LICENSE
2	221-7640	1	BRACKET AS.
3	222-1887	1	BRACKET AS
4	400300X1	4	NUT M6X1
5	CH5P-4115	8	WASHER-7.2IDX19ODX2MM
6	400221X1	6	BOLT-M6X1X20MM ZNDI HHD 10.9
7	CH8T-4205	2	WASHER-HARD 7.2IDX14.5ODX2MM
8	CH9X-2042	3	SCREW-M6X1X12 ORG TORX

[A] PART OF 179-2180 BASE COMMON AR

1585925A
PR: t05i29k58b0267

MOUNTING GP-MONITOR - 222-7965

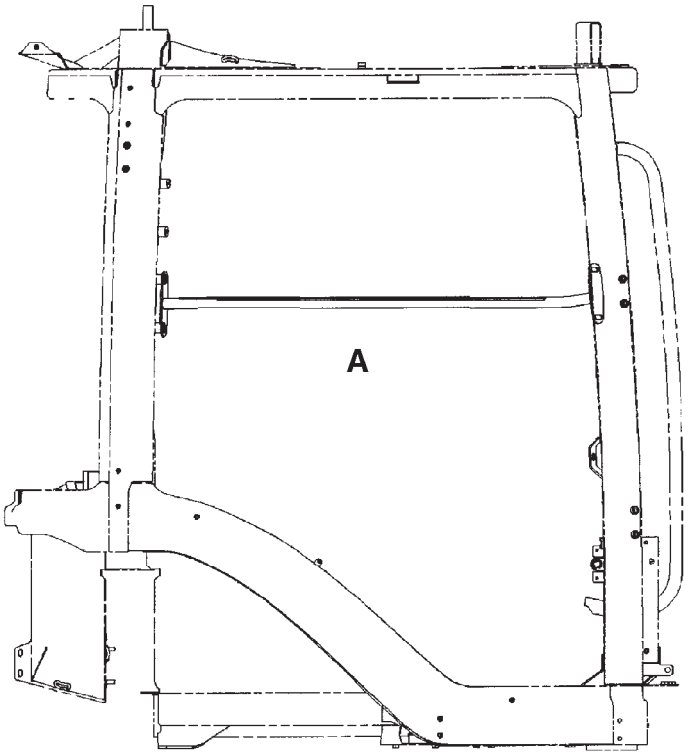

RIGHT SIDE VIEW

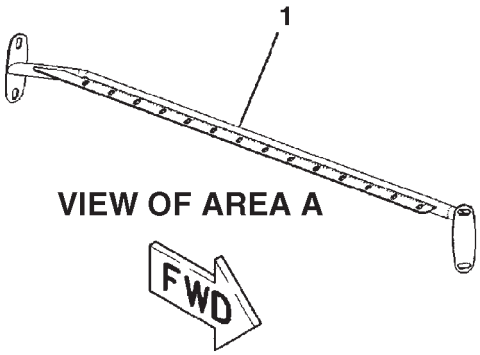

VIEW OF AREA A

MOUNTING GP-MONITOR - 222-7965

ITEM	NUMBER	QTY	DESCRIPTION
-	502778D1	--	MOUNTING GP-MONITOR (FIELD INSTALLED)
-	502798D1	--	MOUNTING GP-MONITOR (FACTORY) (NOT SERVICED, ORDER FIELD INSTALLED)
-	222-7965	--	MOUNTING GP-MONITOR [A] (NOT SERVICED, ORDER FIELD INSTALLED)
1	215-8364	1	TUBE ASM
	CH6V-5839	2	WASHER (11IDX21X2.5MM) (NOT SHOWN)
	CH9X-2040	2	SCREW-TRS HD (M10X1.5X20) (NOT SHOWN)
	CH9X-2041	2	SCREW-TRS HD (M10X1.5X25) (NOT SHOWN)

[A] PART OF 500033D1;500034D1;500035D1;
500037D1 BASE UNIT AR;
BASE UNIT AR;
502778D1; 502798D1 MTG GP-MONITOR

0894860A
PR: t05i29k58b0268

PANEL GP-ENCLOSURE (CAT) - 210-4350

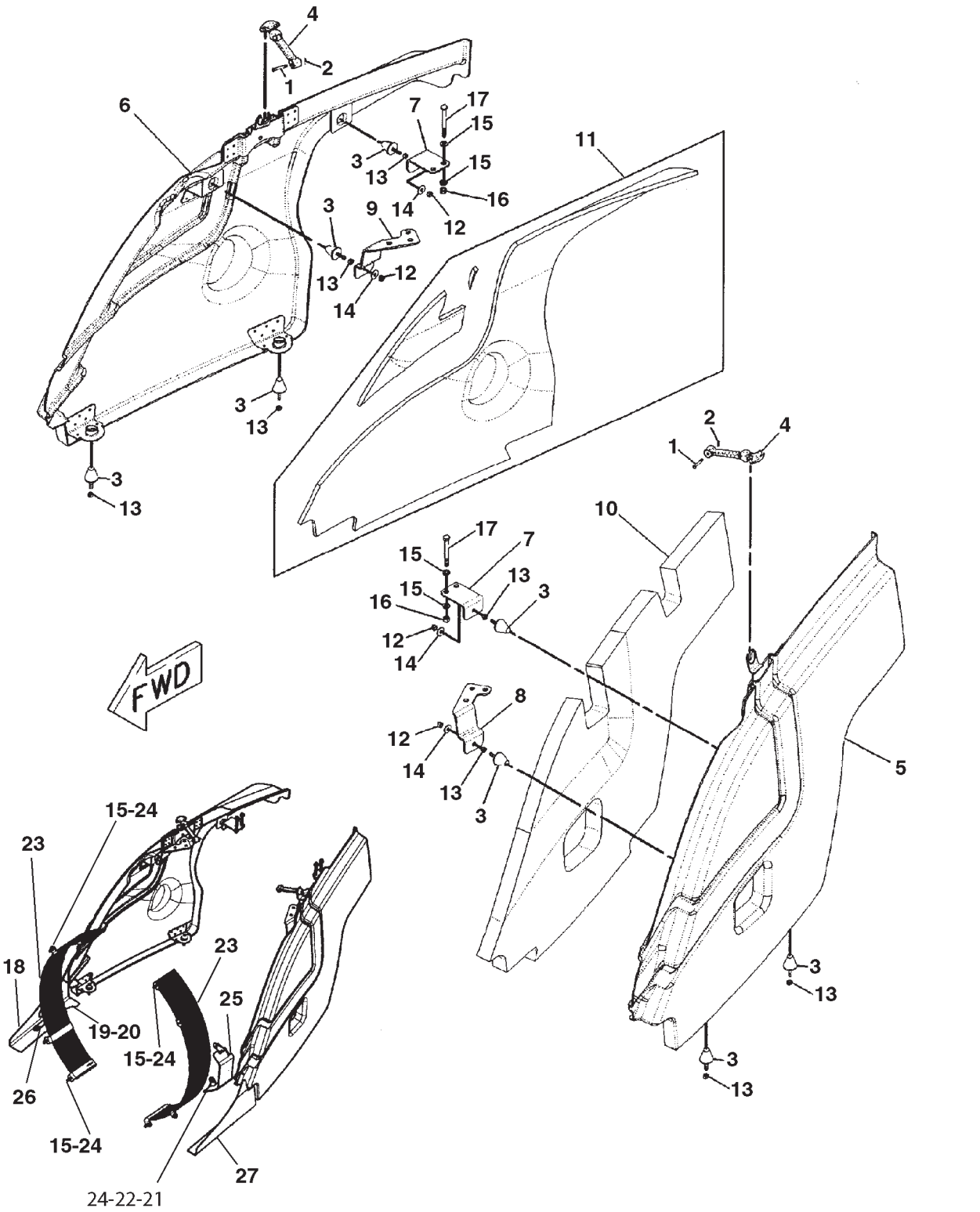

0893711A

PANEL GP-ENCLOSURE (CAT) - 210-4350

ITEM	NUMBER	QTY	DESCRIPTION
-	210-4350	--	PANEL GP-ENCLOSURE [A] (NOT SERVICED)
1	CH2M-5795	2	PIN-CLEVIS
2	CH3B-4607	2	PIN-COTTER
3	CH3W-7412	8	BUMPER-CONICAL
4	CH9M-3835	2	LATCH-RUBBER
5	210-4348	1	PANEL ASM (LH)
6	210-4349	1	PANEL ASM (RH)
7	210-4406	2	BRACKET
8	210-4407	1	BRACKET (LH)
9	210-4408	1	BRACKET (RH)
10	210-4411	1	INSULATION (LH)
11	210-4412	1	INSULATION (RH)
12	CH3E-9860	4	LOCKNUT (5/16-18)
13	400682X1	8	NUT (5/16-18)
14	CH7X-0579	8	WASHER-HARD (8.8X25.5X2)
15	400287X1	14	WASHER-HARD (11X21X2.5)
16	WR522218	4	NUT (M10X1.5)
17	400225X1	4	BOLT (M10X1.5X90MM)
18	210-4421	1	BRACKET
19	CH7X-7729	4	WASHER
20	400059X1	4	BOLT (M10X1.5)
21	-----	2	NUT-HEX 1/2-13 (USE LOCKNUT)
21	CH1K-6872	2	NUT-LOCK 1/2-13
22	400357X1	2	WASHER-HARD
23	204-5043	2	GUARD ASM-FAN
24	400058X1	6	BOLT (M10X1.5X30)
25	501205D1	1	GUARD-ALTERNATOR
26	225-8514	1	PLATE
27	216-6285	1	BRACKET
28	400275X1	2	GROMMET (USED W/ITEM 25) (NOT SHOWN)

[A] PART OF 179-2180 BASE COMMON AR

0893711A
PR: t05i29k58b0269

PLUG GP-COUNTERWEIGHT - 183-5789
COMPLETING

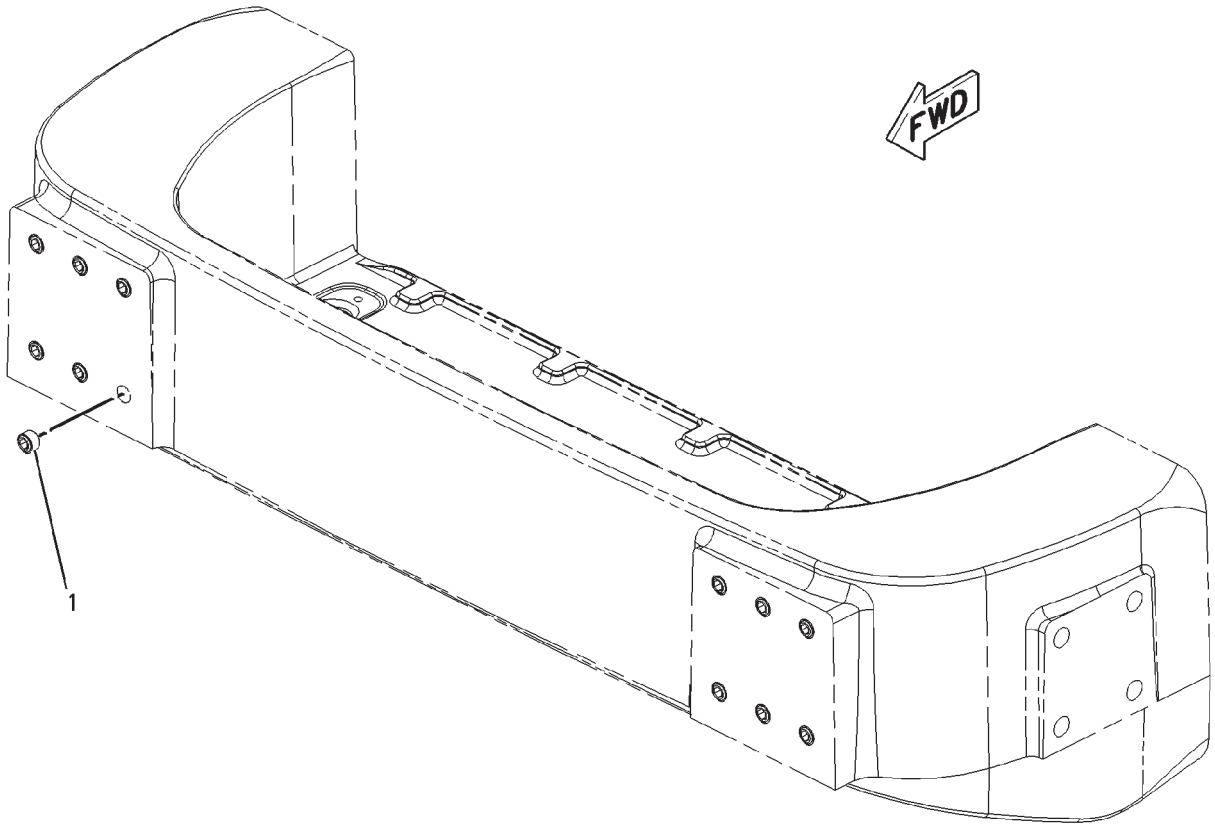

00851420

PLUG GP-COUNTERWEIGHT - 183-5789

COMPLETING

ITEM	NUMBER	QTY	DESCRIPTION
-	183-5789	--	PLUG GP-COUNTERWEIGHT (NOT SERVICED)
1	400090X1	12	PLUG

00851420
PR: t05i29k58b0270

STEP GP - 156-1327

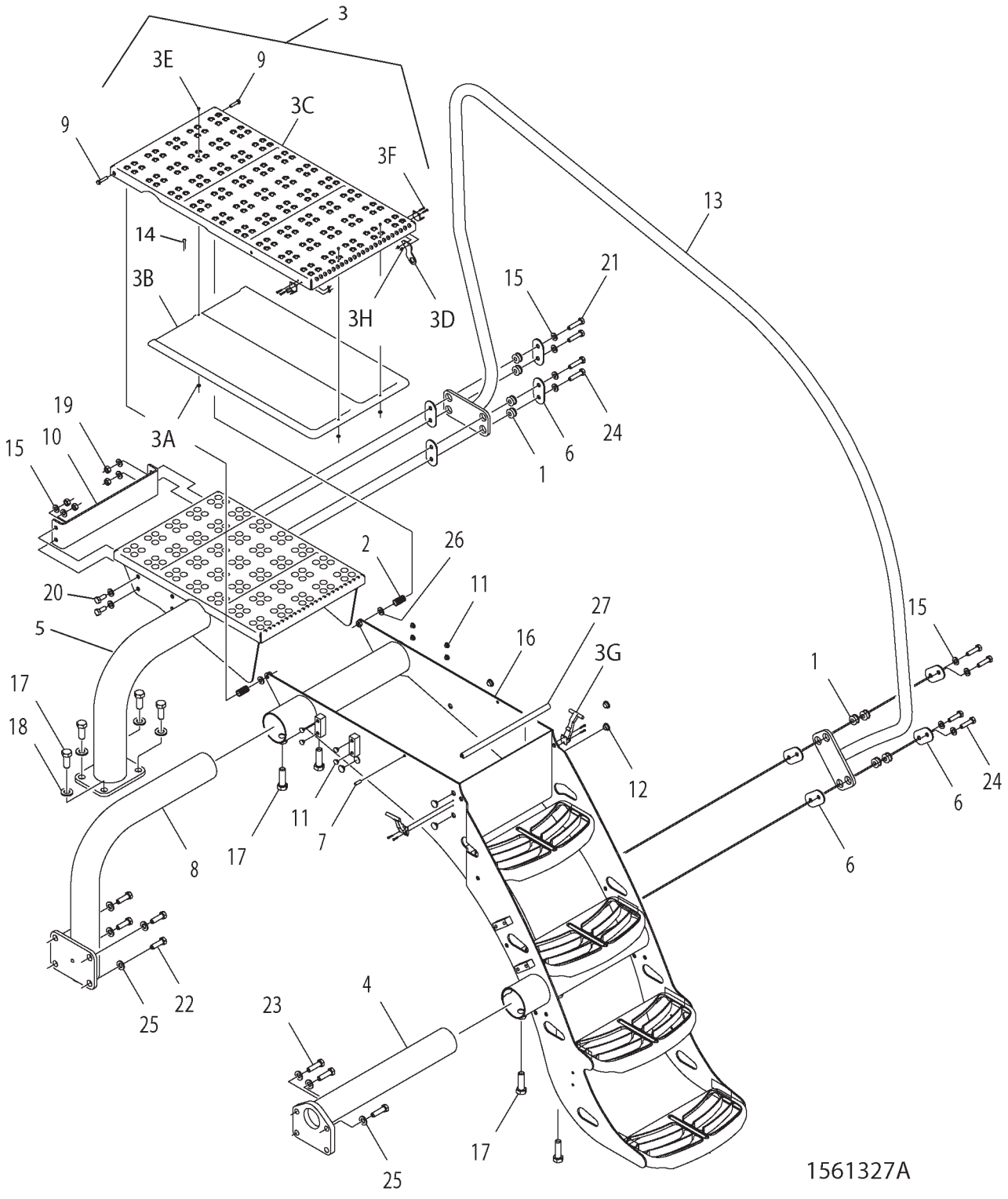

STEP GP - 156-1327

ITEM	NUMBER	QTY	DESCRIPTION
-	156-1327	--	STEP GP [A] (NOT SERVICED)
1	CH6N-6984	8	MOUNTING
2	CH7V-0445	2	SPRING-COMP 15.24 OD X 19.05
3	173-2743	1	STEP AS-TOP DECK (NOT SERVICED)
			(ORDER 3A-3H)
3A	CH6K-3274	3	PLATE-RIVET 3.3 X 9.5 X 1.5
3B	170-5765	1	SHIELD
3C	173-2744	1	STEP-TOP
3D	192-0976	1	PLATE-LOCK TAB
3E	CH103-8089	3	RIVET-BL 3.18 X 6.38-7.92 GRIP
3F	CH1H-8289	8	SCREW-PAN 5-40 THD SLOTTED
3G	CH118-0772	2	LATCH AS-T BALL
3H	CH3K-9089	8	NUT-SELF LOCKING 5-40-3B THD
4	183-7892	1	PIPE AS-FRONT
5	183-7894	1	STEP AS
6	203-9200	6	PLATE
7	204-9922	1	ROD
8	208-7525	1	PIPE AS. -REAR
9	400015X1	2	BOLT-M8X1.25X33 ZNDI HSHD 12.9
10	225-8861	1	BRACKET
11	CH193-5914	12	PLUG-PROTECTIVE PLASTIC,M10
12	CH193-5916	6	PLUG-PROTECTIVE PLASTIC M16
13	220-2730	1	TUBE AS-HANDRAIL
14	CH3B-4610	1	PIN-COTTER 2.38 DIAX22.2MM STL
15	400287X1	16	WASHER-HARD 11IDX21ODX2.5 ZND1
16	500441D2	1	STEP AS
17	400191X1	8	BOLT-M16X2X40MM ZNDI HHD 10.9
18	CH8T-4122	4	WASHER HARD-17IDX32ODX3.5MM
19	WR522218	6	NUT-M10-1.5,CL10.9,ZN,H,REG
20	400039X1	2	BOLT-M10X1.5X25 ZNDI HHD 10.9
21	400049X1	2	BOLT-M10X1.5X45 ZNDI HHD 10.9
22	400050X1	4	BOLT-M12X1.75X40 ZNDI HHD 10.9
23	400051X1	3	BOLT-M12X1.75X45 ZNDI HHD 10.9
24	400052X1	6	BOLT-M10X1.5X40 ZNDI HHD 10.9
25	400357X1	7	WASHER-HARD-M12X25.50DX3THK
26	400339X1	2	WASHER-HARD
27	WR513654	1	EDGE LINER .19" TK MAT PVC (33CM)

PART OF 179-1953 CHASSIS AR

1561327A
PR: t05i29k58b0271

HANDHOLD GP - 221-8534
EAME ONLY

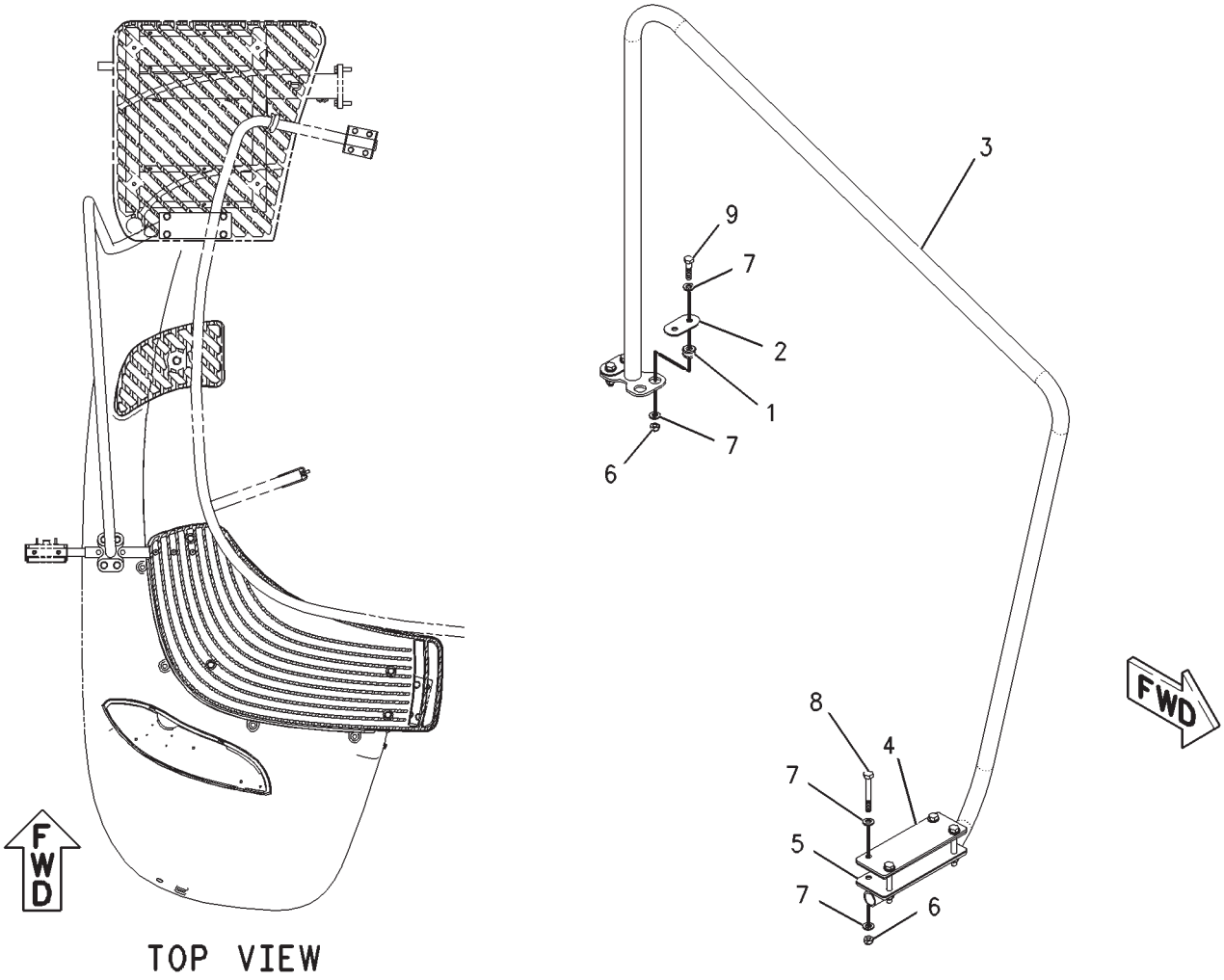

00895637

HANDHOLD GP - 221-8534

EAME ONLY

ITEM	NUMBER	QTY	DESCRIPTION
-	221-8534	--	HANDHOLD GP [A] (NOT SERVICED)
1	CH6N-6984	4	MOUNT
2	203-9200	2	PLATE
3	221-8535	1	HANDHOLD AS
4	221-8536	1	PLATE
5	221-8537	2	INSULATION
6	CH6V-7744	8	LOCKNUT (M10X1.5 THD)
7	400287X1	16	WASHER-HARD (11X21X2.5MM THK)
8	400044X1	4	BOLT (M10X1.50X80MM)
9	400052X1	4	BOLT (M10X1.5X40MM)

[A] PART OF 179-2180 BASE COMMON AR

00895637
PR: t05i29k58b0272

SUPPORT GP-FUEL TANK - 186-5431
1 OF 2

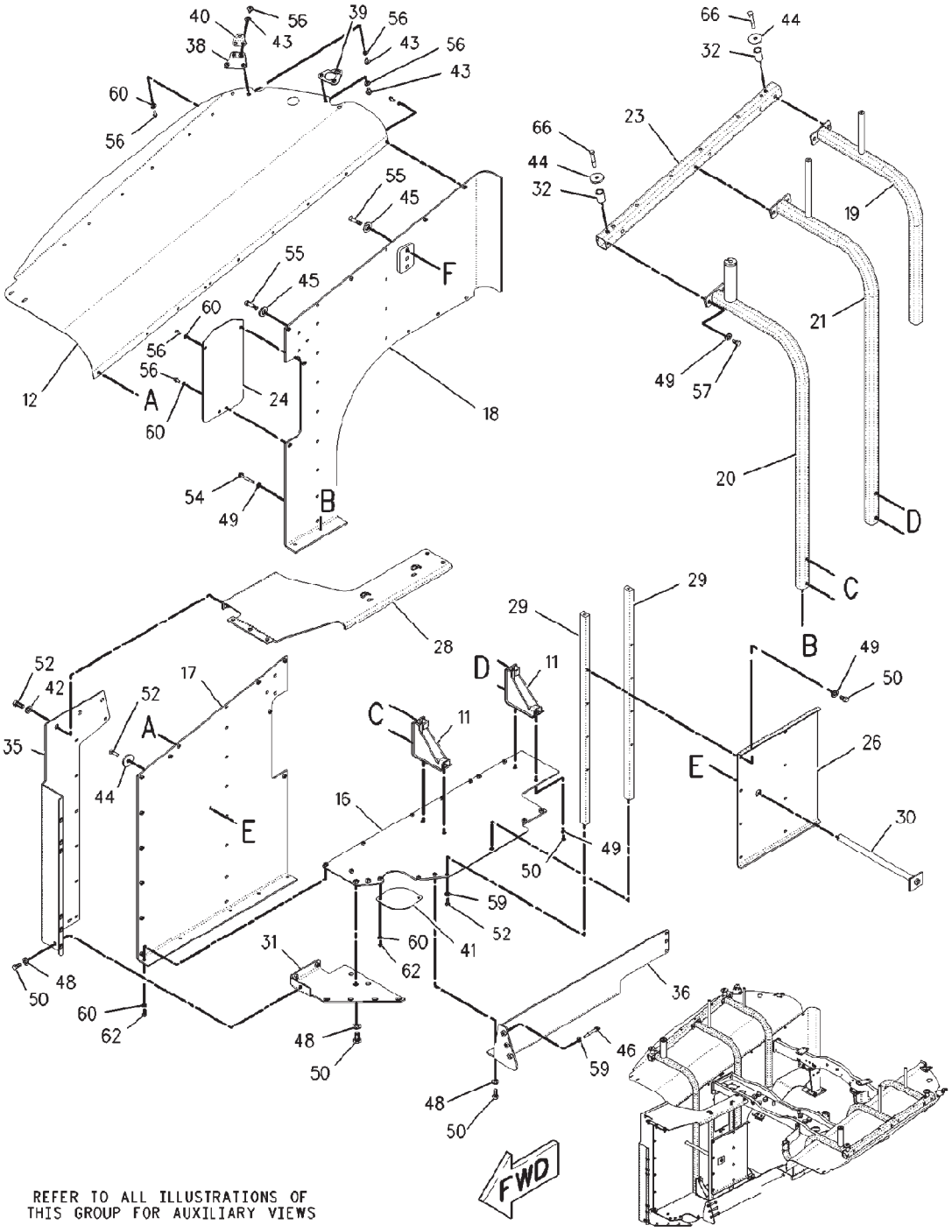

00890185

SUPPORT GP-FUEL TANK - 186-5431

ITEM	NUMBER	QTY	DESCRIPTION
-	186-5431	--	SUPPORT GP-FUEL TANK [A] (NOT SERVICED)
11	188-0772	2	PLATE ASM (INCL.NUT-WELD, AND PLATES)
	CH8T-3490	4	NUT-WELD (M10X1.5)
12	188-0773	1	SHIELD
16	188-0777	1	PLATE ASM (RH) (TANK SUPPORT)
	CH8T-3490	5	NUT-WELD (M10X1.5)
	CH8T-3612	10	NUT-WELD (M8X1.25)
17	188-0778	1	SHIELD AS
	CH8T-3612	12	NUT-WELD (M8X1.25)
18	188-0779	1	SHIELD AS
	CH8T-3612	6	NUT-WELD (M8X1.25)
19	195-0499	1	TUBE AS
20	195-0500	1	TUBE AS
	CH8T-3597	1	NUT-WELD (M12X1.75)
21	195-0501	1	TUBE AS (INCLUDES PLATE, ROD & TUBE)
23	197-8128	1	SUPPORT
24	197-8131	1	SHIELD (RH)
26	205-1388	1	PLATE
28	205-1394	1	PLATE ASM(INCL. PLATE, LINK & NUT-WELD)
	CH7T-1099	2	LINK
	CH8T-3597	3	NUT-WELD (M12X1.75)
29	205-1395	2	BAR
30	205-1396	1	PIN ASM (INCLUDES SPACE-BAR & PLATE)
31	205-1397	1	SHIELD AS (INCLUDES PLATE & NUT-WELD)
	CH8T-3490	3	NUT-WELD (M10X1.5)
32	CH206-4708	4	SPACER (22.2X31.8X50)
35	209-0799	1	SHIELD (RH) (FRONT)
36	209-0800	1	BRACKET ASM (INCL. BRACKET & NUT-WELD)
	CH8T-3490	2	NUT-WELD (M10X1.50)
	CH8T-3597	4	NUT-WELD (M12X1.75)
38	219-7564	1	BRACKET ASM(INCLUDES PLATE & NUT-WELD)
	CH8T-3612	4	NUT-WELD (M8X1.25)
39	219-7565	2	BRACKET ASM(INCLUDES PLATE & NUT-WELD)
	CH8T-3612	2	NUT-WELD (M8X1.25)
40	219-7566	2	BRACKET
41	210-2682	1	COVER
42	400381X1	3	WASHER-HARD (13.5X30X4)
43	400599X1	12	WASHER-HARD (8.8X20.5X2)
44	CH7G-8839	5	SPACER (13.5X57X6)
45	CH7X-0618	14	WASHER-HARD (13.5X40X5)
46	400029X1	3	BOLT (M12X1.75X100MM)
48	CH7X-7729	9	WASHER (11X25X3)
49	400287X1	59	WASHER-HARD (11X21X2.5)
50	400039X1	31	BOLT (M10X1.5X25MM)
52	400041X1	33	BOLT (M12X1.75X30MM)
54	400044X1	6	BOLT (M10X1.50X80MM)
55	400050X1	14	BOLT (M12X1.75X40MM)
56	400053X1	72	BOLT (M8X1.25X20MM)
57	400058X1	12	BOLT (M10X1.5X30MM)
59	400357X1	35	WASHER-HARD (M12X25.5X3)
60	400339X1	69	WASHER-HARD (8.8X16X2)
62	400341X1	9	BOLT (M8X1.25X25MM)
66	400241X1	4	BOLT (M12X1.75X80MM)

[A] PART OF 179-2182 TANK & MTG GP-FUEL

SUPPORT GP-FUEL TANK - 186-5431
2 OF 2

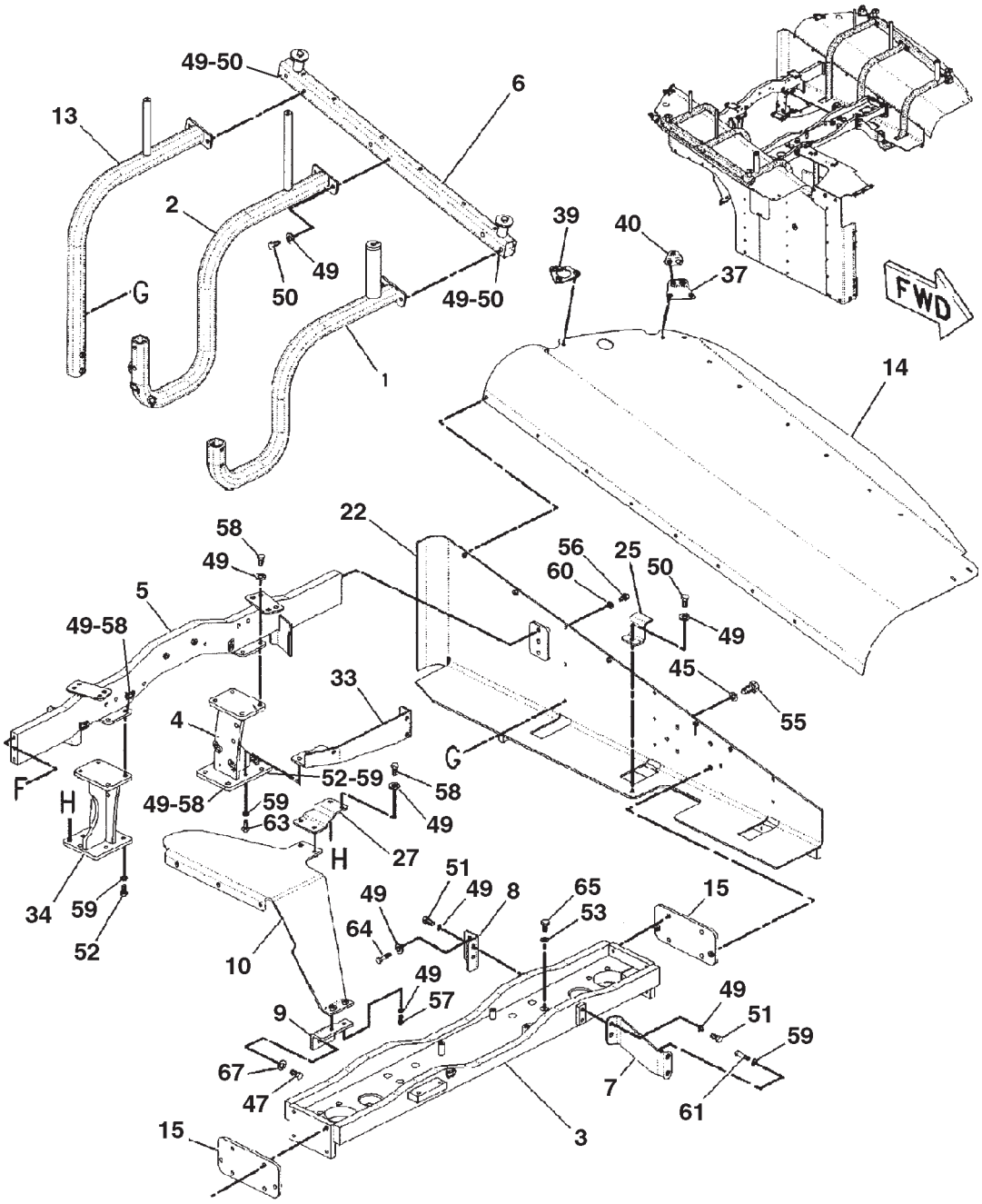

REFER TO ALL ILLUSTRATIONS OF
THIS GROUP FOR AUXILIARY VIEWS

SUPPORT GP-FUEL TANK - 186-5431

ITEM	NUMBER	QTY	DESCRIPTION
-	186-5431	--	SUPPORT GP-FUEL TANK [A] (NOT SERVICED)
1	187-1062	1	TUBE ASM
	CH7T-1099	1	LINK
	CH8T-3597	1	NUT-WELD (M12X1.75)
2	187-1069	1	TUBE ASM
	CH7T-1099	3	LINK
	CH8T-3490	2	NUT-WELD (M10X1.5)
3	188-0497	1	BRACKET ASM
	CH7T-1099	4	LINK
	CH8Y-3795	1	BOSS (M10X1.5X39MM)
4	188-0762	1	BRACKET ASM
	CH7T-1099	3	LINK
	CH8T-3490	8	NUT-WELD (M10X1.5)
	CH9R-2821	1	BOSS
5	188-0763	1	SUPPORT ASM
	CH7T-1099	3	LINK
6	188-0764	1	SUPPORT AS
7	188-0765	1	ARM ASM
	CH8T-3597	2	NUT-WELD (M12X1.75)
8	188-0766	1	ANGLE
9	188-0768	1	BRACKET
10	188-0769	1	BRACKET ASM
	CH8T-3490	7	NUT-WELD (M10X1.5)
13	188-0774	1	TUBE ASM
	CH8T-3490	2	NUT-WELD (M10X1.5)
14	188-0775	1	SHIELD
15	188-0776	2	PLATE ASM
	CH8T-3490	2	NUT-WELD (M10X1.5)
22	195-0502	1	SUPPORT ASM
	CH8T-3490	1	NUT-WELD (M10X1.5)
	CH8T-3612	5	NUT-WELD (M8X1.25)
25	199-2086	1	BRACKET (LH)
27	205-1390	1	BRACKET
33	206-4719	1	SUPPORT ASM (ARM)
	CH7T-1099	1	LINK
	CH8T-3490	2	NUT-WELD (M10X1.5)
	CH8T-3612	1	NUT-WELD (M8X1.25)

CONTINUED

[A] PART OF 179-2182 TANK & MTG GP-FUEL

SUPPORT GP-FUEL TANK - 186-5431
2 OF 2

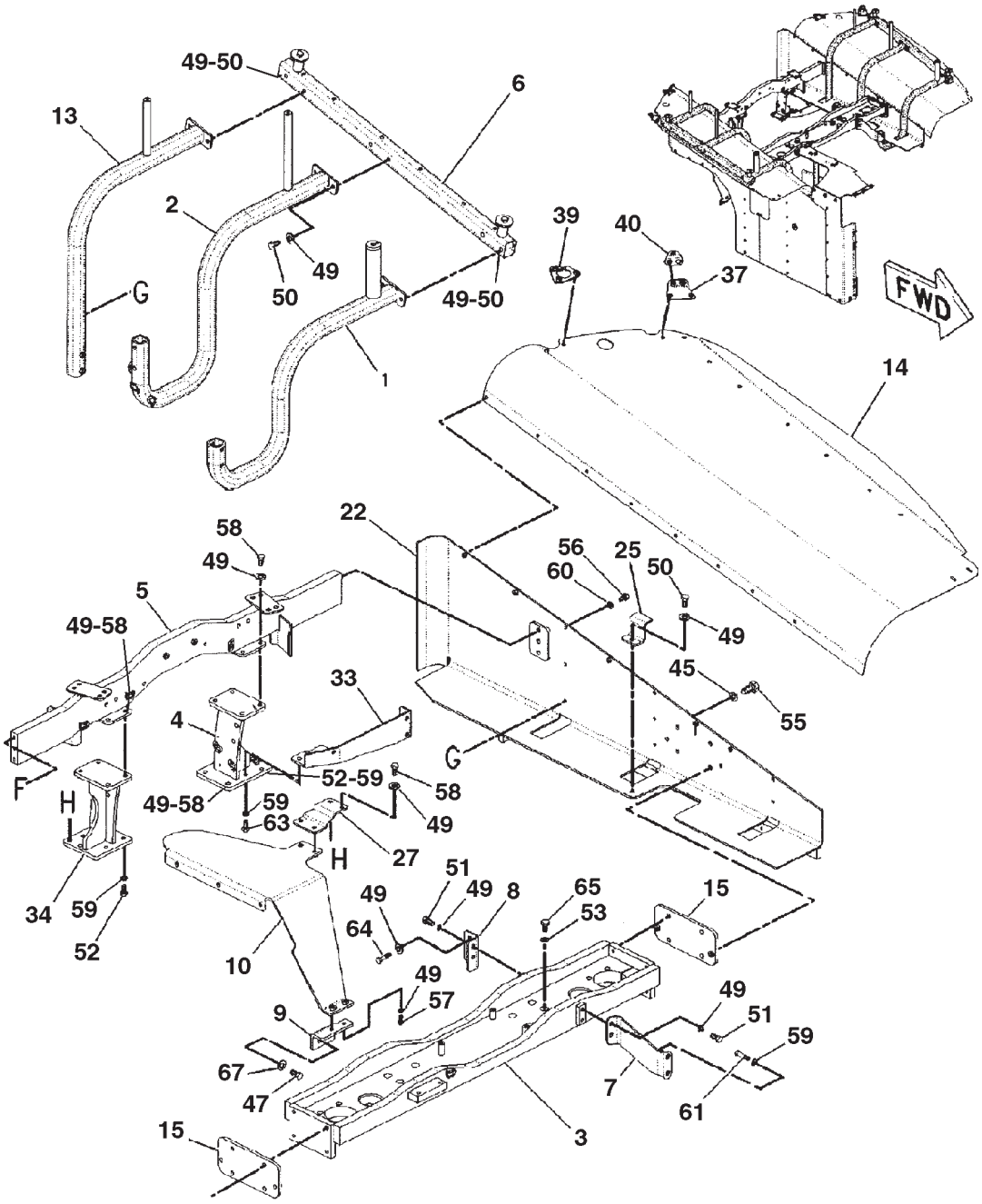

REFER TO ALL ILLUSTRATIONS OF
THIS GROUP FOR AUXILIARY VIEWS

SUPPORT GP-FUEL TANK - 186-5431

ITEM	NUMBER	QTY	DESCRIPTION
-	186-5431	--	SUPPORT GP-FUEL TANK [A] (NOT SERVICED)
34	206-4720	1	BRACKET ASM
	CH8T-3490	6	NUT-WELD (M10X1.5)
37	219-7563	1	BRACKET ASM
	CH8T-3612	4	NUT-WELD (M8X1.25)
39	219-7565	2	BRACKET ASM
	CH8T-3612	2	NUT-WELD (M8X1.25)
40	219-7566	2	BRACKET
45	CH7X-0618	14	WASHER-HARD (13.5X40X5)
47	400088X1	2	BOLT (M16X2X30MM)
49	400287X1	59	WASHER-HARD (11X21X2.5)
50	400039X1	31	BOLT (M10X1.5X25MM)
51	400040X1	4	BOLT (M10X1.5X20MM)
52	400041X1	33	BOLT (M12X1.75X30MM)
53	400081X1	10	WASHER-HARD (26X44X4)
55	400050X1	14	BOLT (M12X1.75X40MM)
56	400053X1	72	BOLT (M8X1.25X20MM)
57	400058X1	12	BOLT (M10X1.5X30MM)
58	400059X1	13	BOLT (M10X1.5X35MM)
59	400357X1	35	WASHER-HARD (M12X25.5X3)
60	400339X1	69	WASHER-HARD (8.8X16X2)
61	400062X1	2	BOLT (M12X1.75X70MM)
63	400064X1	1	BOLT (M12X1.75X35MM)
64	400066X1	2	BOLT (M10X1.50X70MM)
65	400067X1	10	BOLT (M24X3X80MM)
67	400082X1	2	WASHER (17.5X30X3.5)

[A] PART OF 179-2182 TANK & MTG GP-FUEL

0890186A
PR: t05i29k58b0274

SUPPORT GP-COMPONENT - 190-5441

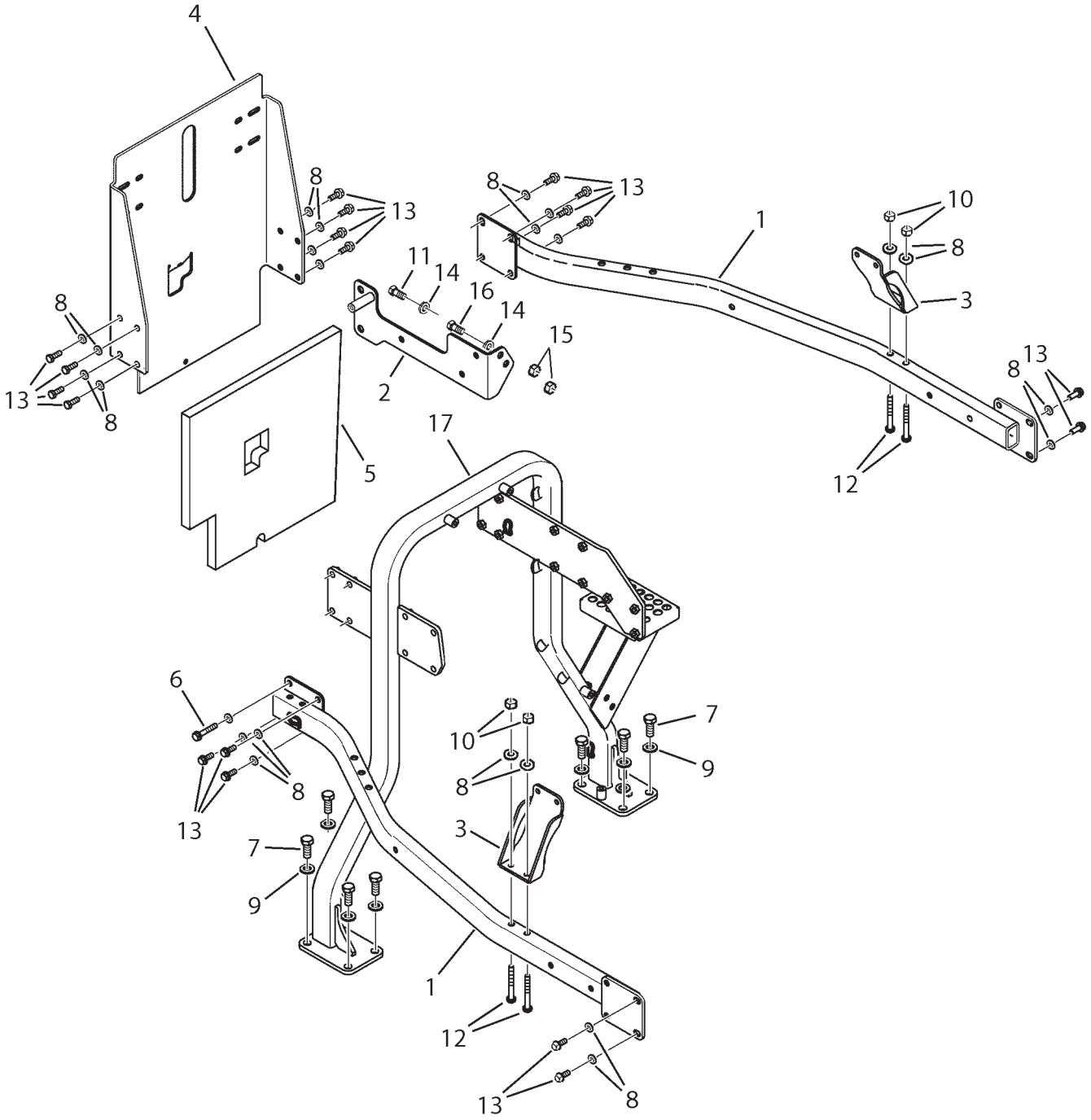

1905441A

SUPPORT GP-COMPONENT - 190-5441

ITEM	NUMBER	QTY	DESCRIPTION
-	190-5441	--	SUPPORT GP-COMPONENT [A] (NOT SERVICED)
1	192-6457	2	TUBE AS (SIDE)
2	196-7824	1	PLATE AS.
3	214-9064	2	BRACKET AS
4	226-0921	1	SUPPORT
5	502655D1	1	INSULATION-REAR ENGINE
6	400143X1	1	BOLT-M10X1.5X60 ZNDI HHD 10.9
7	400191X1	8	BOLT-M16X2X40MM ZNDI HHD 10.9
8	400287X1	28	WASHER-HARD 11IDX21ODX2.5 ZND1
9	CH8T-4122	8	WASHER HARD-17IDX32ODX3.5MM
10	WR522218	4	NUT-M10-1.5,CL10.9,ZN,H,REG
11	400041X1	3	BOLT-M12X1.75X30 ZNDI HHD 10.9
12	400225X1	4	BOLT-M10X1.5X90 ZNDI HHD 10.9
13	400058X1	19	BOLT-M10X1.5X30 ZNDI HHD 10.9
14	400357X1	4	WASHER-HARD-M12X25.50DX3THK
15	CH8T-4244	2	NUT-M12X1.75 HEX ZN
16	400050X1	1	BOLT-M12X1.75X40 ZNDI HHD 10.9
17	226-0919	1	TUBE AS.-CMPNT

PART OF 179-1953 CHASSIS AR

1905441A
PR: t05i29k58b0275

WALKWAY GP - 183-6384

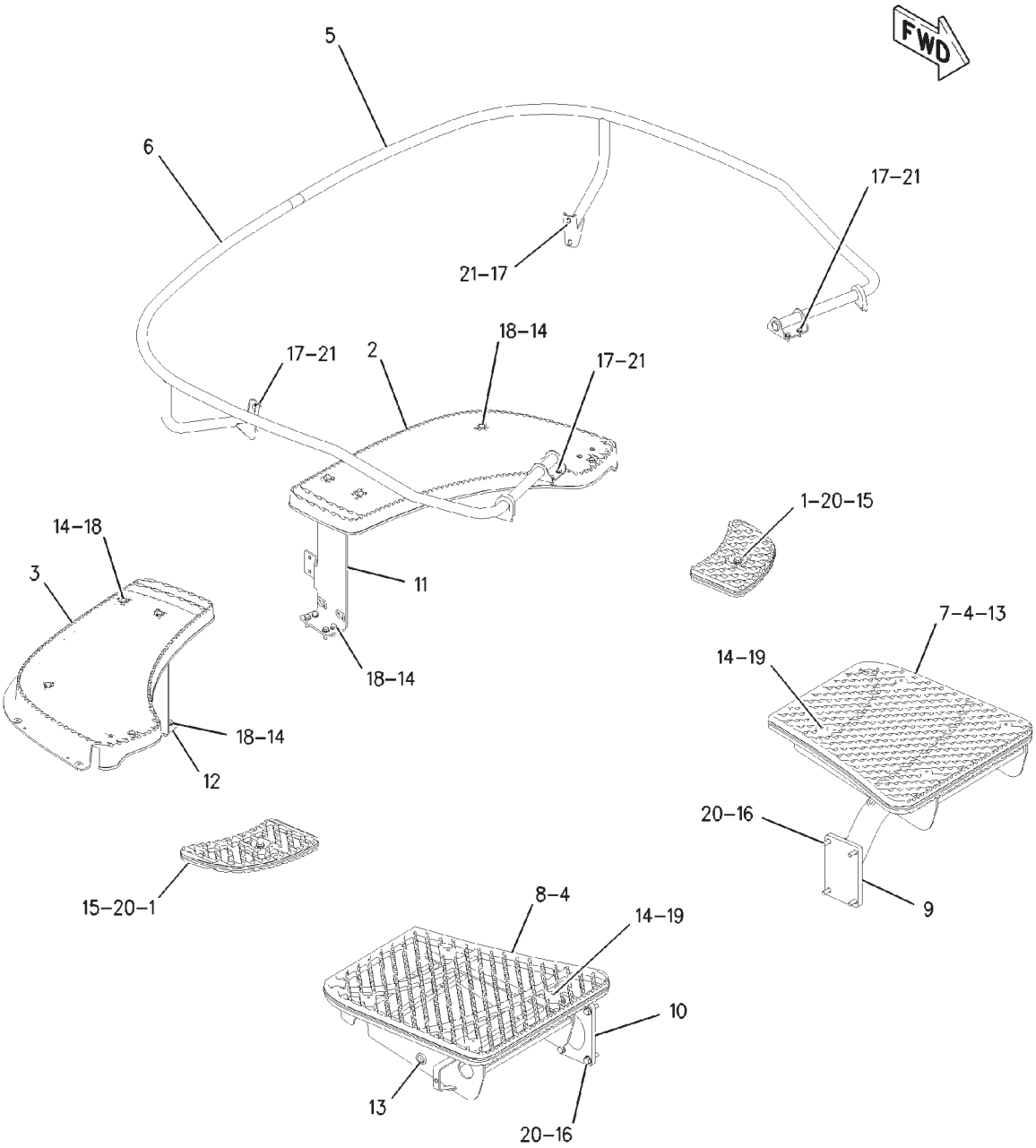

00823178

WALKWAY GP - 183-6384

ITEM	NUMBER	QTY	DESCRIPTION
-	183-6384	--	WALKWAY GP [A] (NOT SERVICED)
1	184-7976	2	STEP
2	184-7977	1	PLATFORM (LH)
3	184-7978	1	PLATFORM (RH)
4	184-7979	2	STEP
5	184-7980	1	HANDHOLD LH
6	184-7985	1	HANDHOLD RH
7	195-2615	1	GROMMET (LH)
8	195-2616	1	GROMMET (RH)
9	209-9220	1	SUPPORT ASM
10	209-9222	1	SUPPORT ASM
11	501997D1	1	BRACKET ASM (LH)
12	501996D1	1	BRACKET ASM (RH)
13	CH3D-6209	6	GROMMET
14	400287X1	24	WASHER-HARD (11X21X2.5)
15	400050X1	2	BOLT (M12X1.75X40MM)
16	400051X1	8	BOLT (M12X1.75X45MM)
17	400053X1	12	BOLT (M8X1.25X20MM)
18	400058X1	16	BOLT (M10X1.5X30MM)
19	400059X1	8	BOLT (M10X1.5X35MM)
20	400357X1	10	WASHER-HARD (M12X25.5X3)
21	400599X1	12	WASHER-HARD (M8X20.5X2)

[A] PART OF:
179-1952; 179-2180 BASE COMMON AR

00823178
PR: t05i29k58b0276

REFLECTOR GP - 215-7336
FOR USE WITH DRAWBAR
EAME

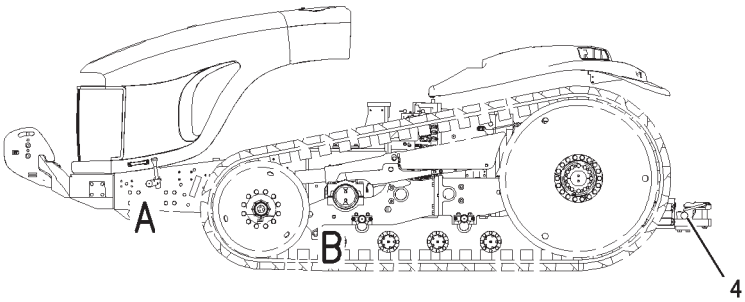

LEFT SIDE VIEW

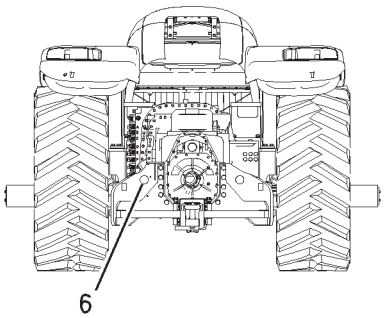

REAR VIEW

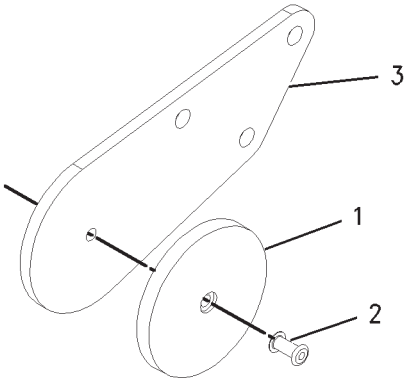

VIEW OF AREA A

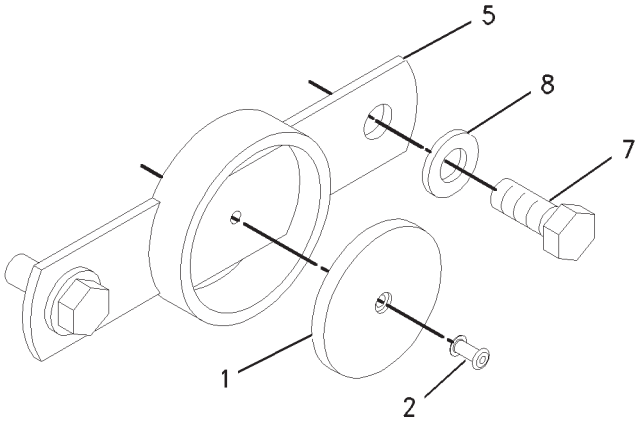

VIEW OF AREA B

REFLECTOR GP - 215-7336

FOR USE WITH DRAWBAR
EAME

ITEM	NUMBER	QTY	DESCRIPTION
-	215-7336	--	KIT, REFLECTOR
1	207-0516	6	REFLECTOR
2	4K-9429	6	RIVET
3	173-8307	2	BRACKET (FRONT)
4	208-3022	2	FILM (YELLOW REFLECTIVE)
5	215-7331	4	BRACKET AS (CENTER)
6	215-7335	2	FILM (RED REFLECTIVE)
7	400041X1	8	BOLT (M12X1.75X30MM)
8	400357X1	8	WASHER-HARD (M12X25.5X3)

00894260
PR: t05i29k58b0277

REFLECTOR GP - 215-9580

FOR USE WITH HITCH
EAME

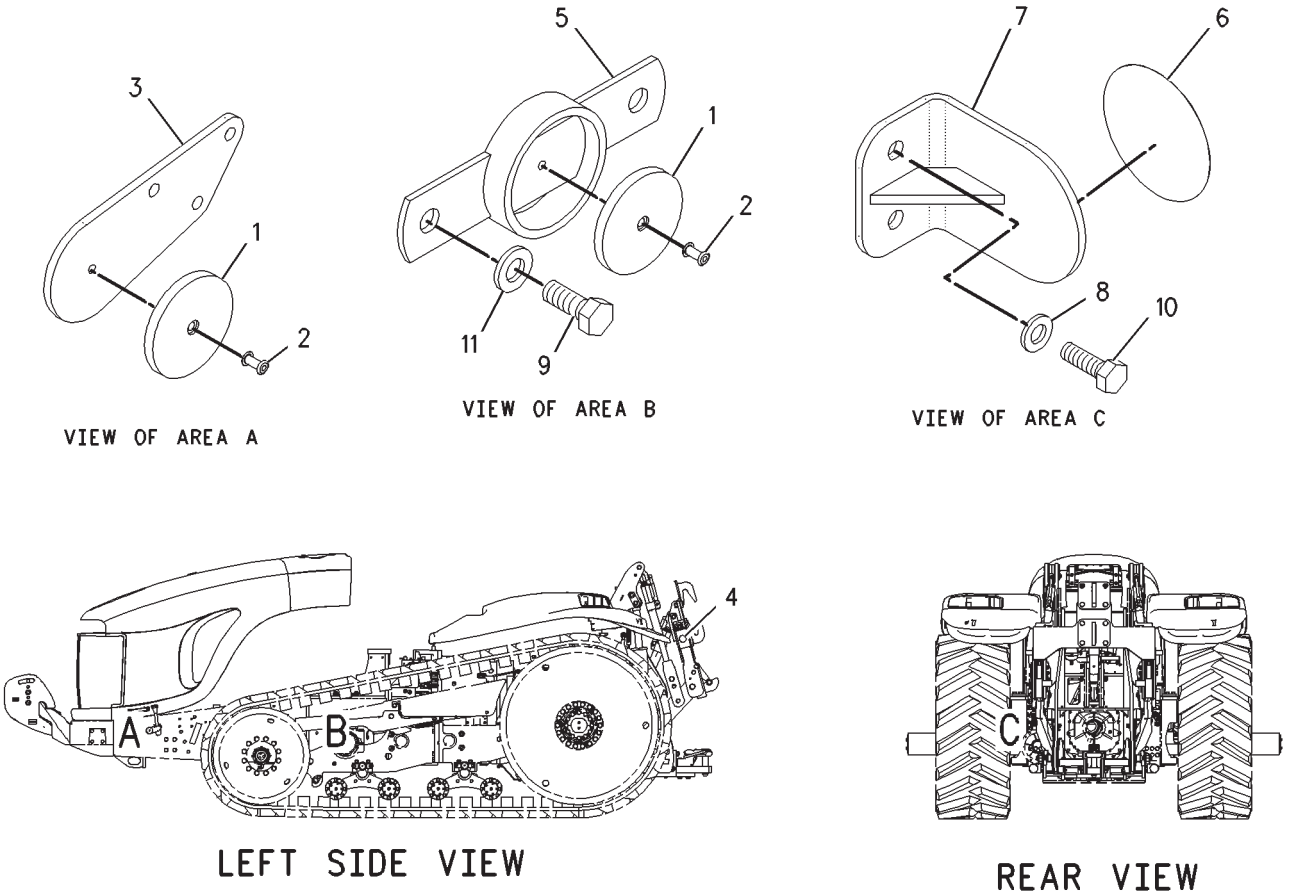

REFLECTOR GP - 215-9580

FOR USE WITH HITCH
EAME

ITEM	NUMBER	QTY	DESCRIPTION
-	215-9580	--	KIT, REFLECTOR
1	207-0516	6	REFLECTOR
2	4K-9429	6	RIVET
3	173-8307	2	BRACKET (FRONT)
4	208-3022	2	FILM (YELLOW REFLECTIVE)
5	215-7331	4	BRACKET AS (CENTER)
6	215-7335	2	FILM (RED REFLECTIVE)
7	215-7353	2	BRACKET AS
8	400287X1	4	WASHER-HARD (11X21X2.5)
9	400041X1	8	BOLT (M12X1.75X30MM)
10	400058X1	4	BOLT (M10X1.5X30MM)
11	400357X1	8	WASHER-HARD (M12X25.5X3)

00893300
PR: t05i29k58b0278

BELT AR-GENERAL AP - 156-6077
(699MM/27.5")
ROW & EAME

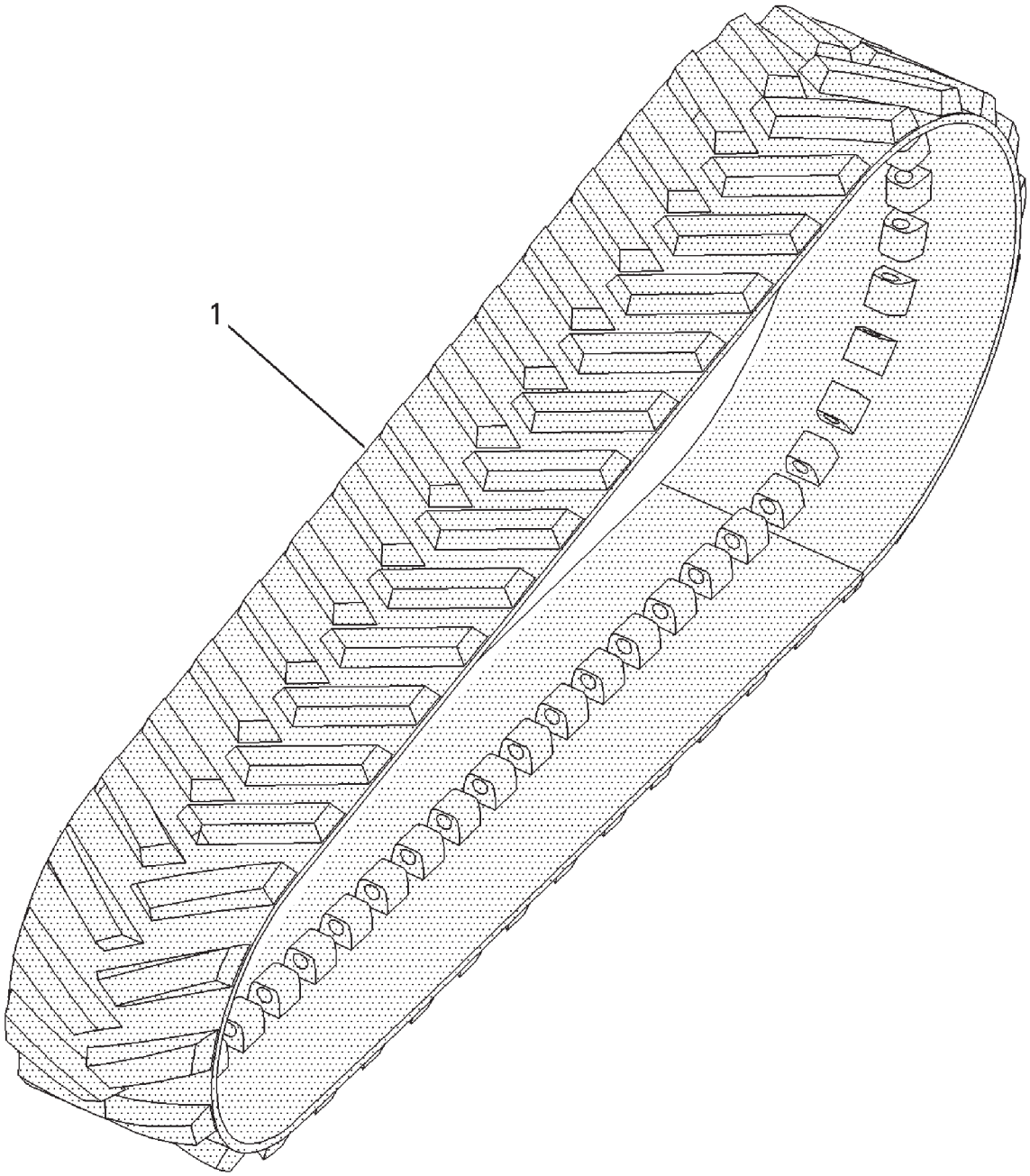

00750372

BELT AR-GENERAL AP - 156-6077

(699MM/27.5")
ROW & EAME

ITEM	NUMBER	QTY	DESCRIPTION
-	156-6077	--	BELT AR (ORDER ON WHOLEGOODS)
-	502142D1	--	BELT AR-FIELD (INCLS 1 OF ITEM 1)
1	1R-1265	2	BELT
-	502185D1	--	KIT, BELT REPAIR
	501739D1		ELASTOMER
	501742D1		SOLIDIFIER
-	501743D1	--	BELT CONDITIONER

00750372
PR: t05i29k58b0279

BELT AR-GENERAL AG - 156-6079
(762MM/30")

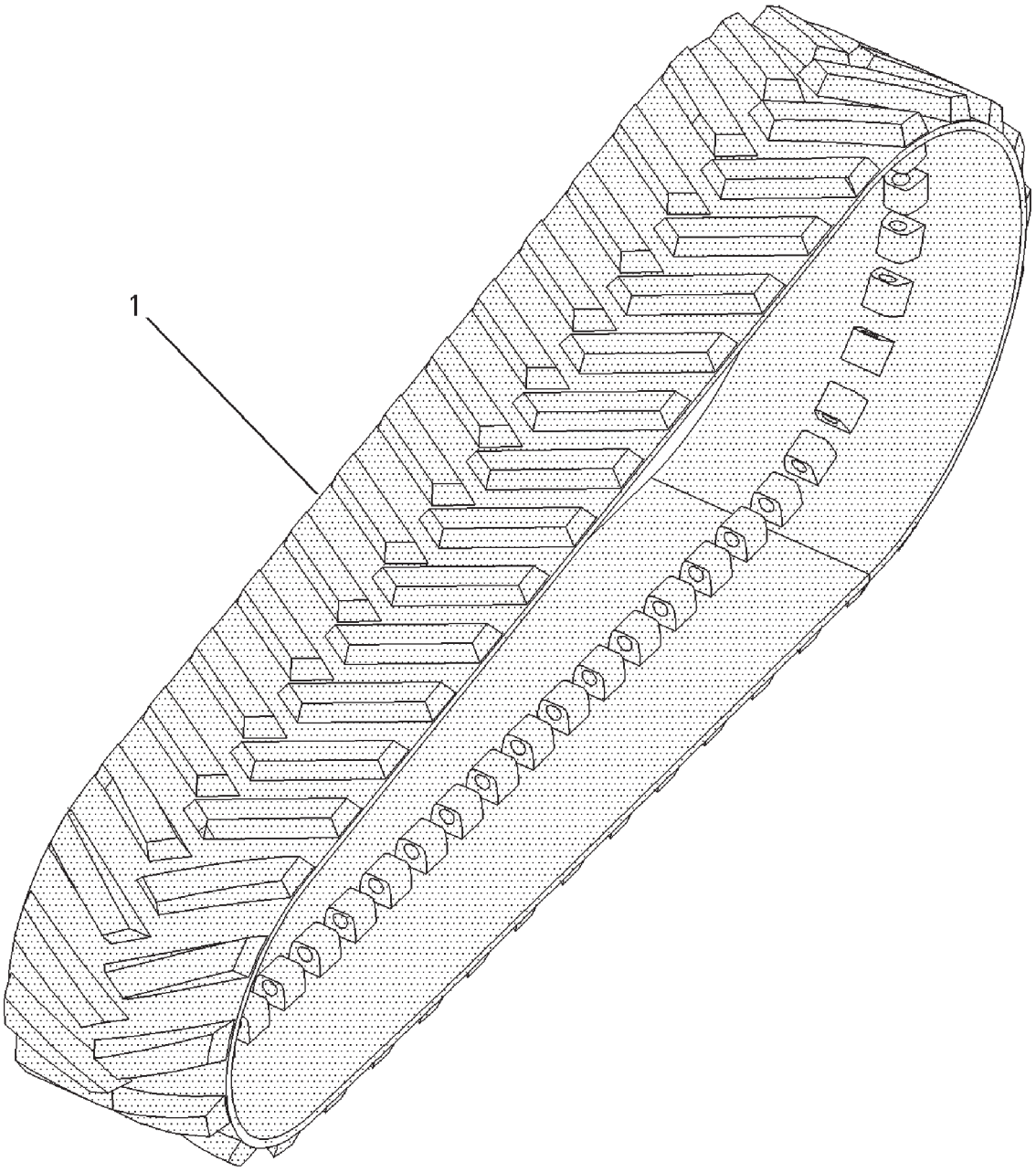

00750377

BELT AR-GENERAL AG - 156-6079
(762MM/30")

ITEM	NUMBER	QTY	DESCRIPTION
-	156-6079	--	BELT AR (ORDER ON WHOLEGOODS)
1	1R-1266	2	BELT
-	502144D1	--	BELT AR-30"-FIELD (INCLS 1 OF ITEM 1)
-	502185D1	--	KIT, BELT REPAIR
	501739D1		ELASTOMER
	501742D1		SOLIDIFIER
-	501743D1	--	BELT CONDITIONER

00750377
PR: t05i29k58b0280

BELT AR-GENERAL AG - 156-6082
(914MM/36")

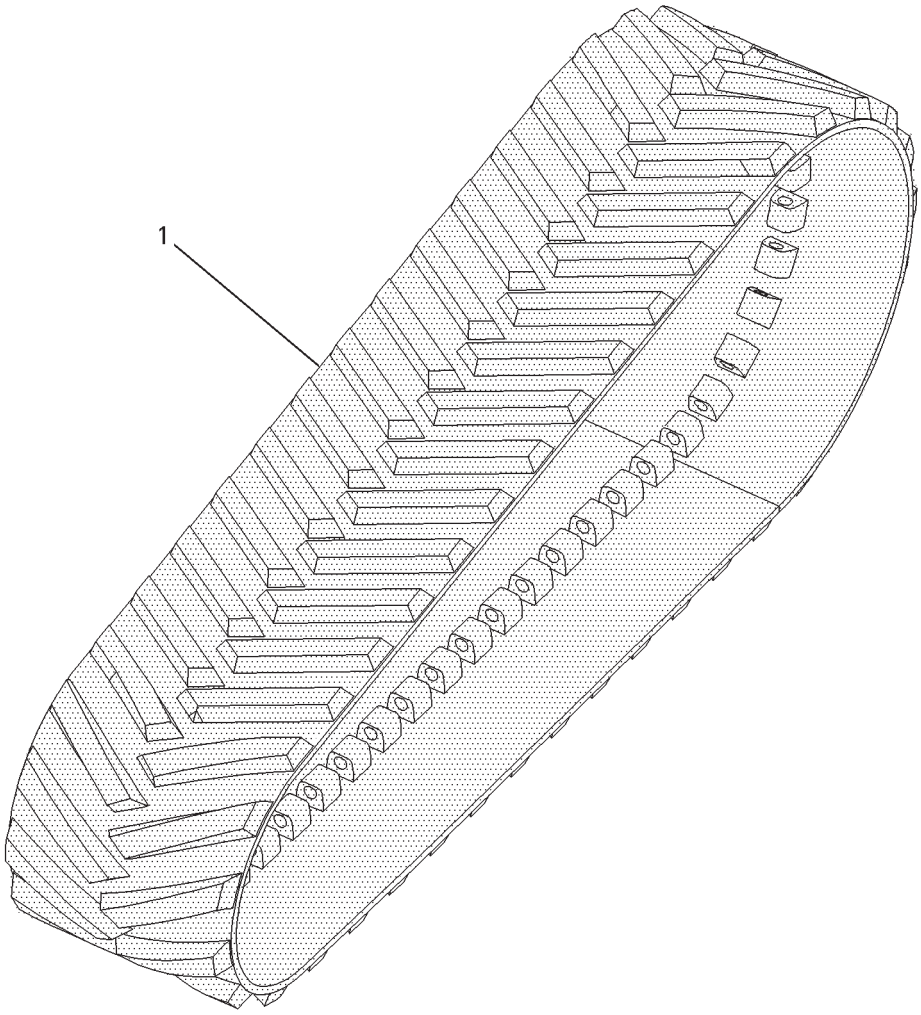

00750562

BELT AR-GENERAL AG - 156-6082
(914MM/36")

ITEM	NUMBER	QTY	DESCRIPTION
-	156-6082	--	BELT AR-36" (ORDER ON WHOLEGOODS)
1	1R-1267	2	BELT
-	502146D1	--	BELT AR-36"-FIELD (INCLS 1 OF ITEM 1)
-	502185D1	--	KIT, BELT REPAIR
	501739D1		ELASTOMER
	501742D1		SOLIDIFIER
-	501743D1	--	BELT CONDITIONER

00750562
PR: t05i29k58b0281

BELT AR-EXTREME AP - 156-6075
(457MM/18")

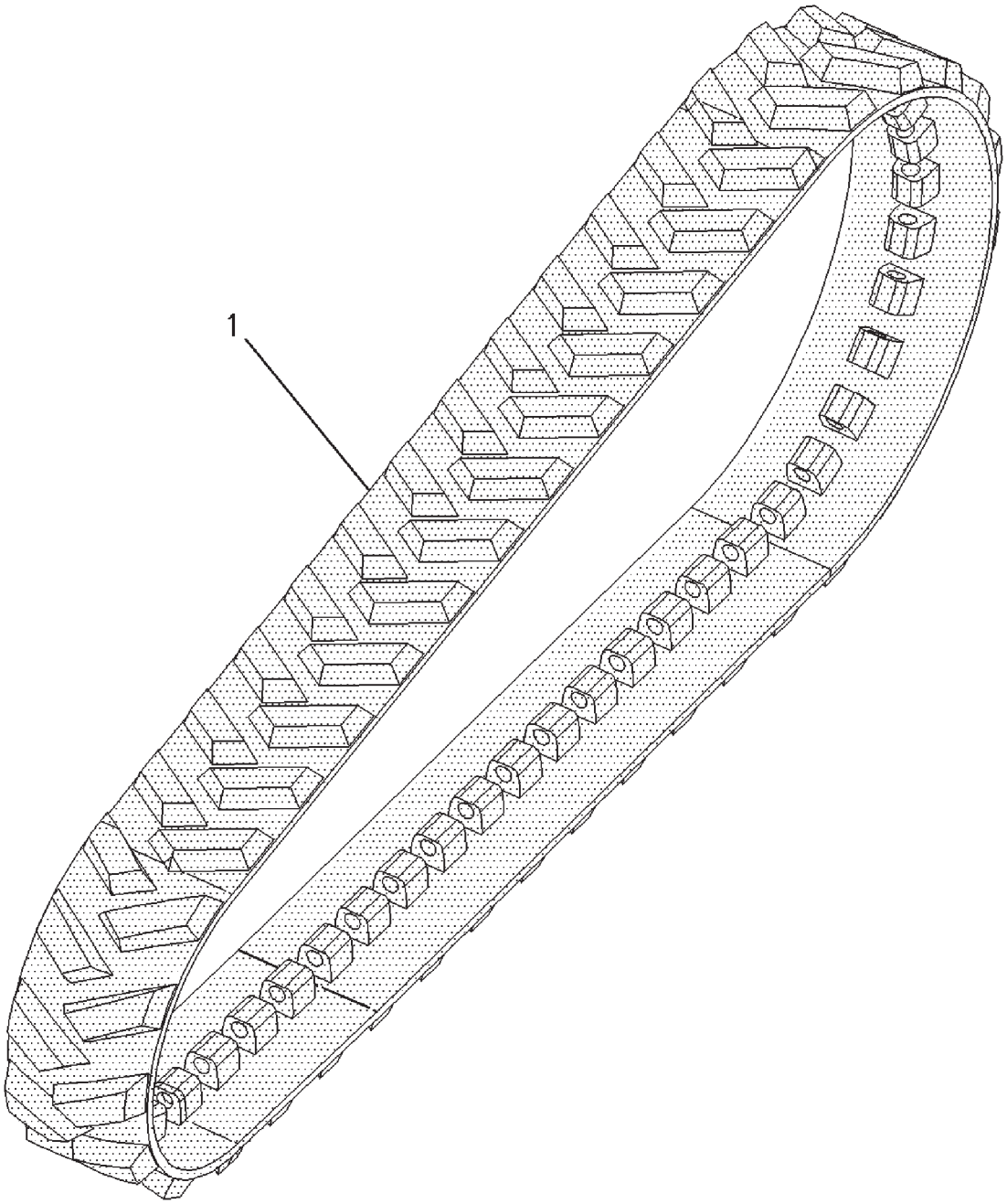

00750379

BELT AR-EXTREME AP - 156-6075
(457MM/18")

ITEM	NUMBER	QTY	DESCRIPTION
-	156-6075	--	BELT AR (ORDER ON WHOLEGOODS)
1	1R-1388	2	BELT
-	502141D1	--	BELT AR (INCLS 1 OF ITEM 1)
-	502185D1	--	KIT, BELT REPAIR
	501739D1		ELASTOMER
	501742D1		SOLIDIFIER
-	501743D1	--	BELT CONDITIONER

00750319
PR: t05i29k58b0282

BELT AR-EXTREME AP - 177-4522
(700MM/27.5")

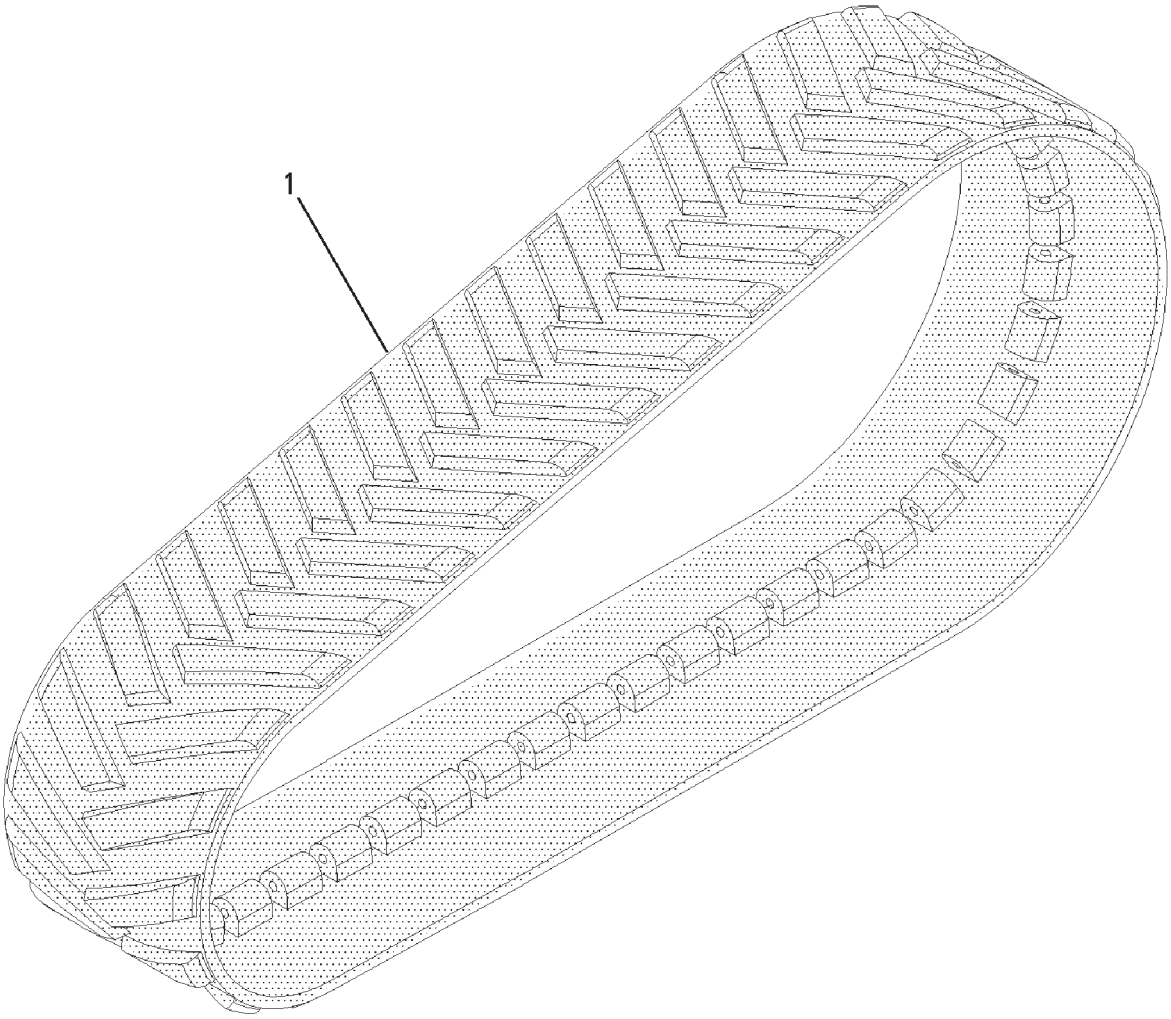

00851106

BELT AR-EXTREME AP - 177-4522
(700MM/27.5")

ITEM	NUMBER	QTY	DESCRIPTION
-	502779D1	--	BELT AR-27.5" [R] (FIELD INSTALLED) (INCLS 2 OF ITEM 1)
-	502143D1	--	BELT AR-27.5"-FIELD (INCLS 1 OF ITEM 1)
-	177-4522	--	BELT AR-27.5" [A] (ORDER ON WHOLEGOODS)
1	1R-1323	2	BELT
-	502143D1	--	BELT AR-30"-FIELD (INCLS 1 OF ITEM 1)
-	502185D1	--	KIT, BELT REPAIR
	501739D1		ELASTOMER
	501742D1		SOLIDIFIER
-	501743D1	--	BELT CONDITIONER

[A] PART OF 502779D1 BELT AR
[R] ROW ONLY

00851106
PR: t05i29k58b0283

BELT AR-EXTREME AP - 177-4523
(762MM/30")

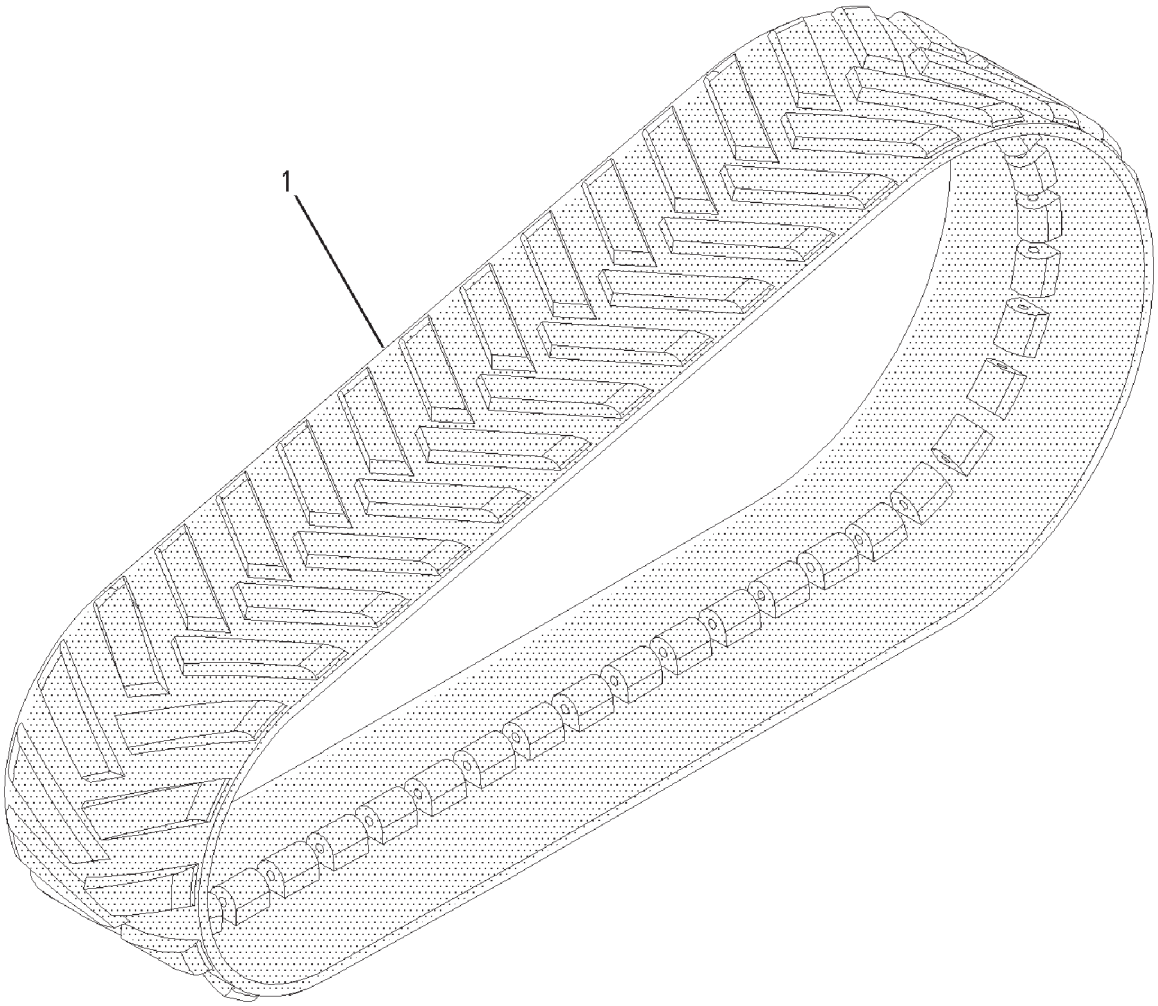

00851108

BELT AR-EXTREME AP - 177-4523
(762MM/30")

ITEM	NUMBER	QTY	DESCRIPTION
-	502780D1	--	BELT AR-30" [R] (FIELD INSTALLED)
			(INCLS 2 OF ITEM 1)
-	502145D1	--	BELT AR-30"-FIELD (INCLS 1 OF ITEM 1)
-	177-4523	--	BELT AR-30"-FACT [A]
			(INCLS 2 OF ITEM 1)
			(ORDER ON WHOLEGOODS)
1	1R-1325	2	BELT
-	502185D1	--	KIT, BELT REPAIR
	501739D1		ELASTOMER
	501742D1		SOLIDIFIER
-	501743D1	--	BELT CONDITIONER

[A] PART OF 502780D1 BELT AR
[R] ROW ONLY

00851108
PR: t05i29k58b0284

BELT AR-EXTREME AP - 178-8087
(914MM/36")

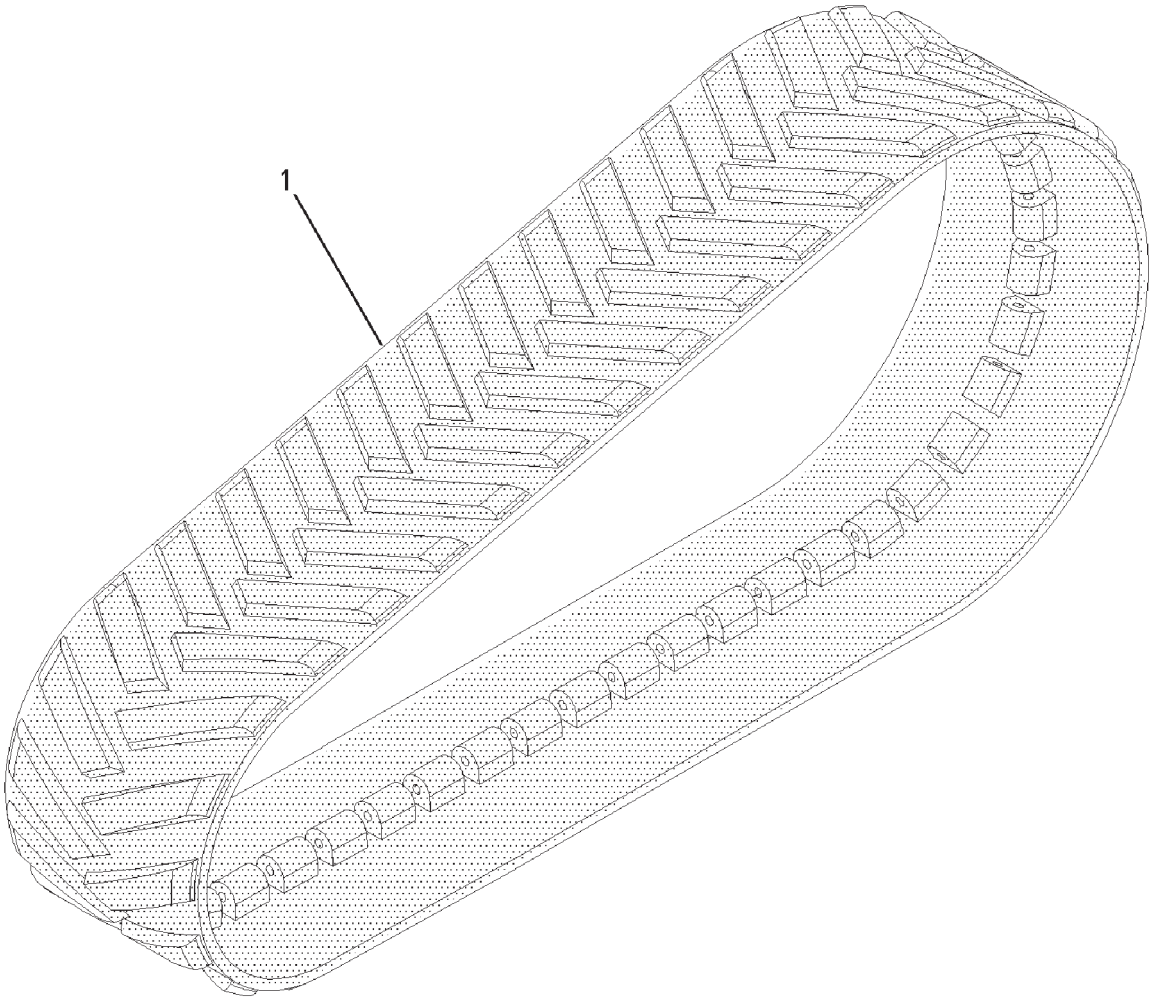

00851176

BELT AR-EXTREME AP - 178-8087
(914MM/36")

ITEM	NUMBER	QTY	DESCRIPTION
-	502781D1	--	BELT AR-36" [R] (FIELD INSTALLED) (INCLS 2 OF ITEM 1)
-	502147D1	--	BELT AR-36"-FIELD (INCLS 1 OF ITEM 1)
-	178-8087	--	BELT AR-36" [A] (INCLS 2 OF ITEM 1) (ORDER ON WHOLEGOODS)
1	1R-1360	2	BELT
-	502185D1	--	KIT, BELT REPAIR
	501739D1		ELASTOMER
	501742D1		SOLIDIFIER
-	501743D1	--	BELT CONDITIONER

[A] PART OF 502781D1 BELT AR
[R] ROW ONLY

00851176
PR: t05i29k58b0285

BELT AR-SPECIAL AP - 502027D1
(762MM/30")

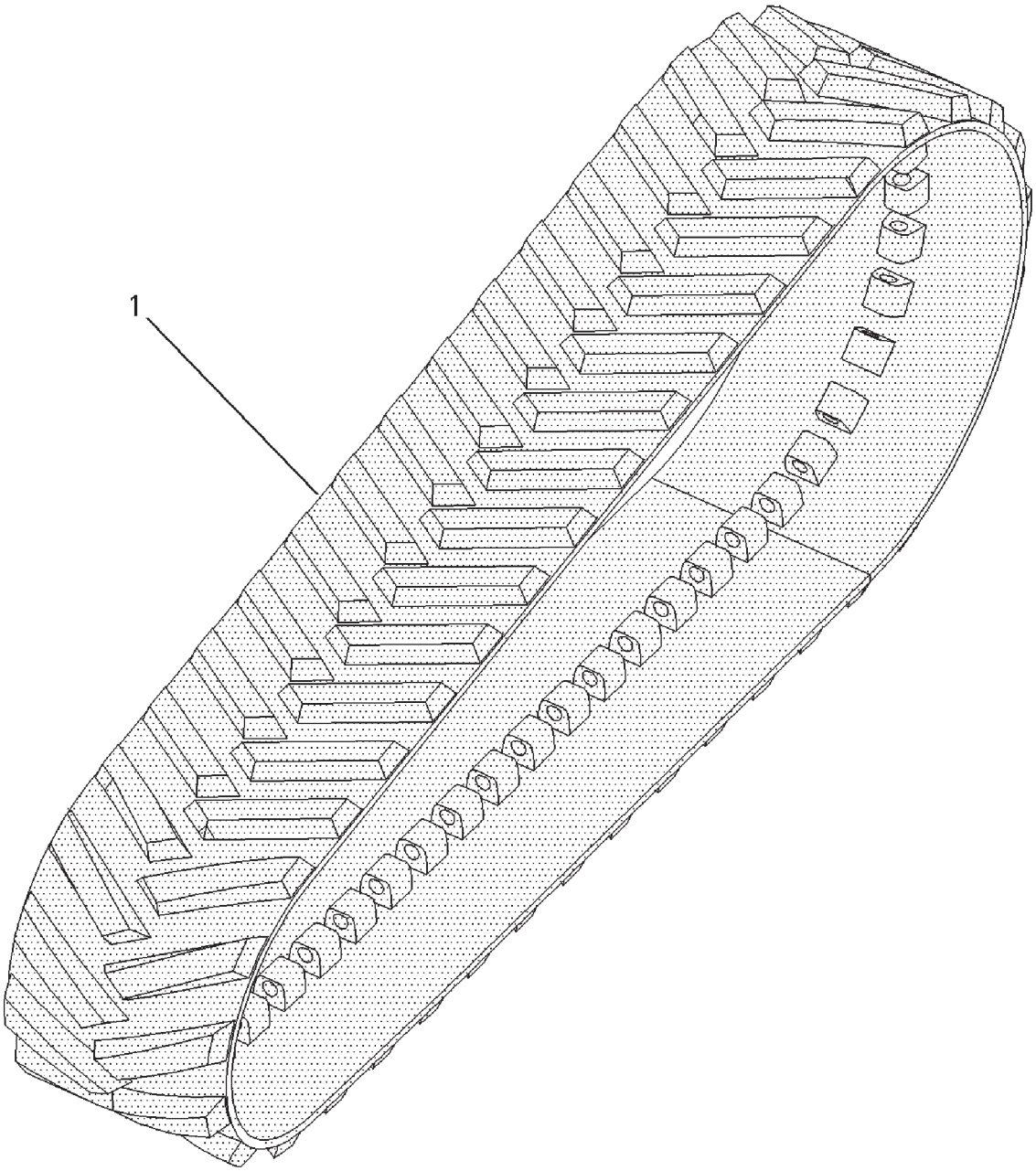

00750377

BELT AR-SPECIAL AP - 502027D1
(762MM/30")

ITEM	NUMBER	QTY	DESCRIPTION
-	502782D1	--	BELT AR-30" [R] (FIELD INSTALLED) (INCLS 2 OF ITEM 1)
-	502027D1	--	BELT AR [A] (ORDER ON WHOLEGOODS) (INCLS 2 OF ITEM 1)
-	502148D1	--	BELT AR-FIELD (INCLS 1 OF ITEM 1)
1	501186D1	2	BELT
-	502185D1	--	KIT, BELT REPAIR
	501739D1		ELASTOMER
	501742D1		SOLIDIFIER
-	501743D1	--	BELT CONDITIONER

[A] PART OF 502782D1
[R] ROW ONLY

00750377
PR: t05i29k58b0286

BELT AR-SPECIAL AP - 502028D1
(914MM/36")

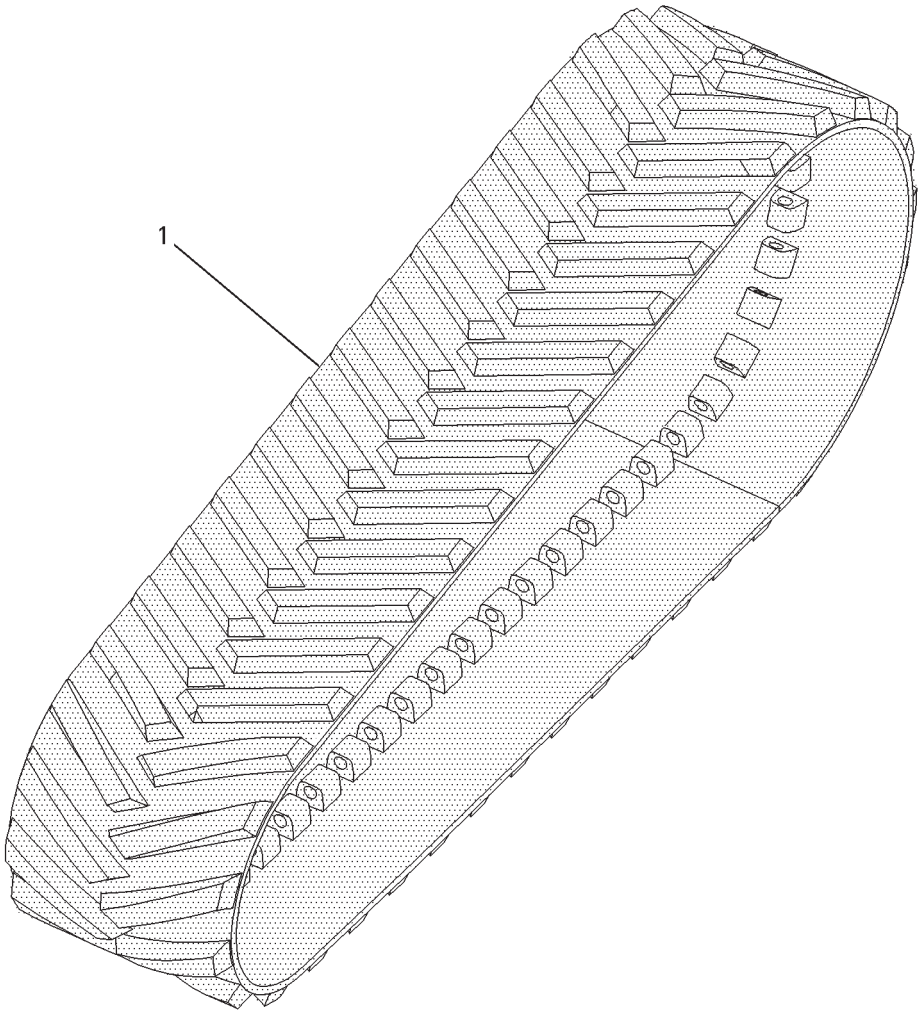

00750562

BELT AR-SPECIAL AP - 502028D1
(914MM/36")

ITEM	NUMBER	QTY	DESCRIPTION
-	502783D1	--	BELT AR-36" [R] (FIELD INSTALLED)
			(INCLS 2 OF ITEM 1)
-	502028D1	--	BELT AR-36" [A] (ORDER ON WHOLEGOODS)
			(INCLS 2 OF ITEM 1)
-	502149D1	--	BELT AR-36"-FIELD (INCLS 1 OF ITEM 1)
1	501196D1	2	BELT
-	502185D1	--	KIT, BELT REPAIR
	501739D1		ELASTOMER
	501742D1		SOLIDIFIER
-	501743D1	--	BELT CONDITIONER

[A] PART OF 502783D1
[R] ROW ONLY

00750562
PR: t05i29k58b0287

KIT-GUIDE BLOCK
GENERAL AG & EXTREME APPLICATIONS

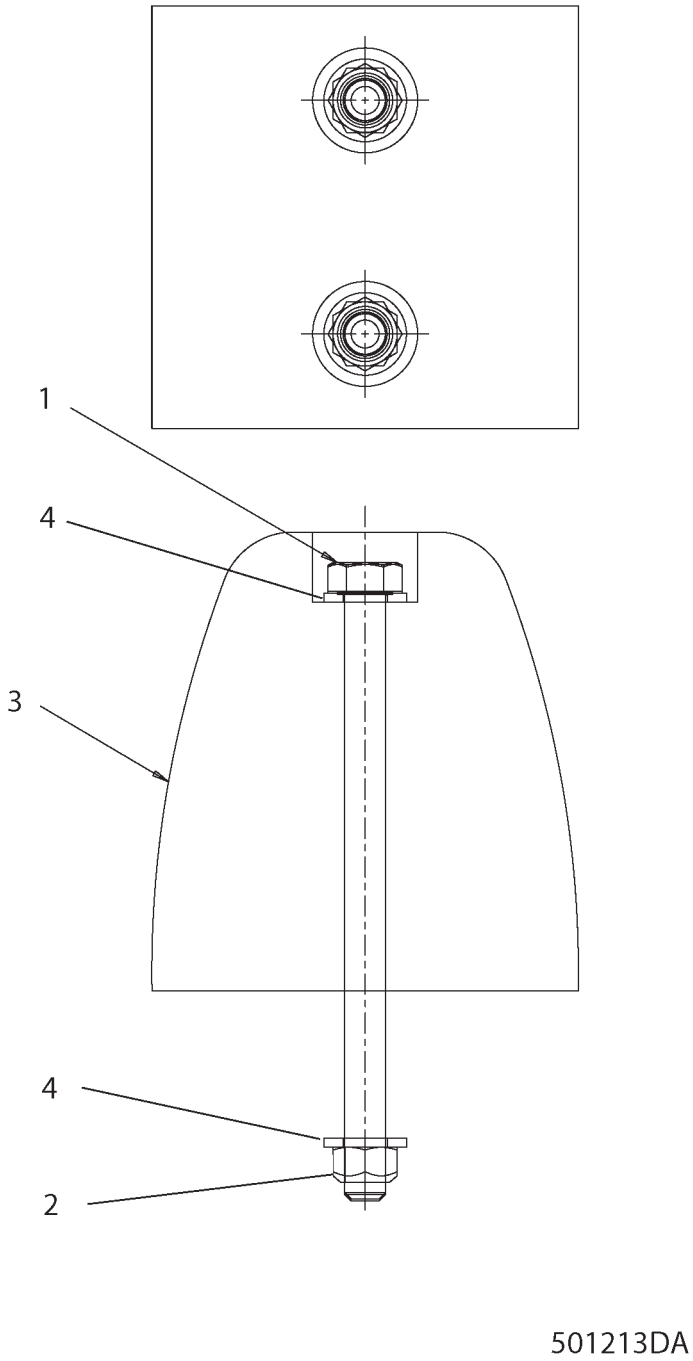

KIT-GUIDE BLOCK
GENERAL AG & EXTREME APPLICATIONS

ITEM	NUMBER	QTY	DESCRIPTION
-	501215D1	--	KIT-GUIDE BLOCK (GEN AG)
-	501216D1	--	KIT-GUIDE BLOCK (EXTREME AP)
1	400276X1	2	BOLT-7/16-14X165 ZNDI HHD 10.9
2	400278X1	2	NUT-LOCK 7/16-14 ZNDI&WAX HEX
3	501197D1	1	BLOCK-GUIDE (GEN AG)
	501198D1	1	BLOCK-GUIDE (EXTREME AP)
4	400358X1	4	WASHER-HARD-7/16X22.50DX2.5THK

501213DA
PR: t05i29k58b0288

GAUGE AR-TRACK (W/O PTO) - 177-9948

(2286-3251MM/90-128")
ROW ONLY

NO ILLUSTRATION

NOTIF

GAUGE AR-TRACK (W/O PTO) - 177-9948

(2286-3251MM/90-128")
ROW ONLY

ITEM	NUMBER	QTY	DESCRIPTION
-	177-9948	--	GAUGE AR-TRACK (NOT SERVICED)
1	156-4881	1	UNDERCARRIAGE AR (NOT SERVICED) (SEE BREAKDOWN FOR COMPONENTS)
2	158-2404	1	MOTOR & MTG GP-STEERING (NOT SERVICED) (SEE BREAKDOWN FOR COMPONENTS)
3	200-5029	1	POWER TRAIN AR (NOT SERVICED) (SEE BREAKDOWN FOR COMPONENTS)

NOTIF
PR: t05i29k58b0289

GAGE AR-TRACK (W/PTO)

2286-3251 MM (90-128 IN)
ROW ONLY

NO ILLUSTRATION

NOTIF

GAGE AR-TRACK (W/PTO)

2286-3251 MM (90-128 IN)
ROW ONLY

ITEM	NUMBER	QTY	DESCRIPTION
-	183-2198	--	GAUGE AR-TRACK (NOT SERVICED)
-	183-4470	1	GUARD GP-POWER TAKE-OFF (SEE BREAKDOWN FOR COMPONENTS)
-	189-2976	1	LINES GP-POWER TAKE-OFF (NOT SERVICED) (SEE BREAKDOWN FOR COMPONENTS)
-	158-2404	1	MOTOR & MTG GP-STEERING (NOT SERVICED) (SEE BREAKDOWN FOR COMPONENTS)
-	200-5027	1	POWER TRAIN AR (NOT SERVICED) (SEE BREAKDOWN FOR COMPONENTS)
-	156-4881	1	UNDERCARRIAGE AR (NOT SERVICED) (SEE BREAKDOWN FOR COMPONENTS)

NOTIF
PR: t05i29k58b0290

GAUGE AR-TRACK (W/O PTO) - 177-9947

(2286-2600MM/90-102")
EAME ONLY

NO ILLUSTRATION

NOTIF

GAUGE AR-TRACK (W/O PTO) - 177-9947

(2286-2600MM/90-102")
EAME ONLY

ITEM	NUMBER	QTY	DESCRIPTION
-	177-9947	--	GAUGE AR-TRACK (NOT SERVICED)
1	172-4517	1	MOTOR & MOUNTING GP (STEERING) (NOT SERVICED) (SEE BREAKDOWN FOR COMPONENTS)
2	177-9946	1	UNDERCARRIAGE AR (NOT SERVICED) (SEE BREAKDOWN FOR COMPONENTS)
3	200-5030	1	POWER TRAIN AR (NOT SERVICED) (SEE BREAKDOWN FOR COMPONENTS)

NOTIF
PR: t05i29k58b0291

GAUGE AR-TRACK (W/PTO) - 183-2197

(2286-2600MM/90-102")
EAME ONLY

NO ILLUSTRATION

NOTIF

GAUGE AR-TRACK (W/PTO) - 183-2197

(2286-2600MM/90-102")
EAME ONLY

ITEM	NUMBER	QTY	DESCRIPTION
-	183-2197	--	GAUGE AR-TRACK (NOT SERVICED)
-	224-5884	1	CONTROL GP-POWER TAKE-OFF (NOT SERVICED) (SEE BREAKDOWN FOR COMPONENTS)
-	183-4470	1	GUARD GP-POWER TAKE-OFF (NOT SERVICED) (SEE BREAKDOWN FOR COMPONENTS)
-	189-2976	1	LINES GP-POWER TAKE-OFF (NOT SERVICED) (SEE BREAKDOWN FOR COMPONENTS)
-	172-4517	1	MOTOR & MOUNTING GP (NOT SERVICED) (SEE BREAKDOWN FOR COMPONENTS)
-	200-5028	1	POWER TRAIN AR (NOT SERVICED) (SEE BREAKDOWN FOR COMPONENTS)
-	177-9946	1	UNDERCARRIAGE AR (NOT SERVICED) (SEE BREAKDOWN FOR COMPONENTS)

NOTIF
PR: t05i29k58b0292

TENSIONER GP-BELT - LH
500835D1

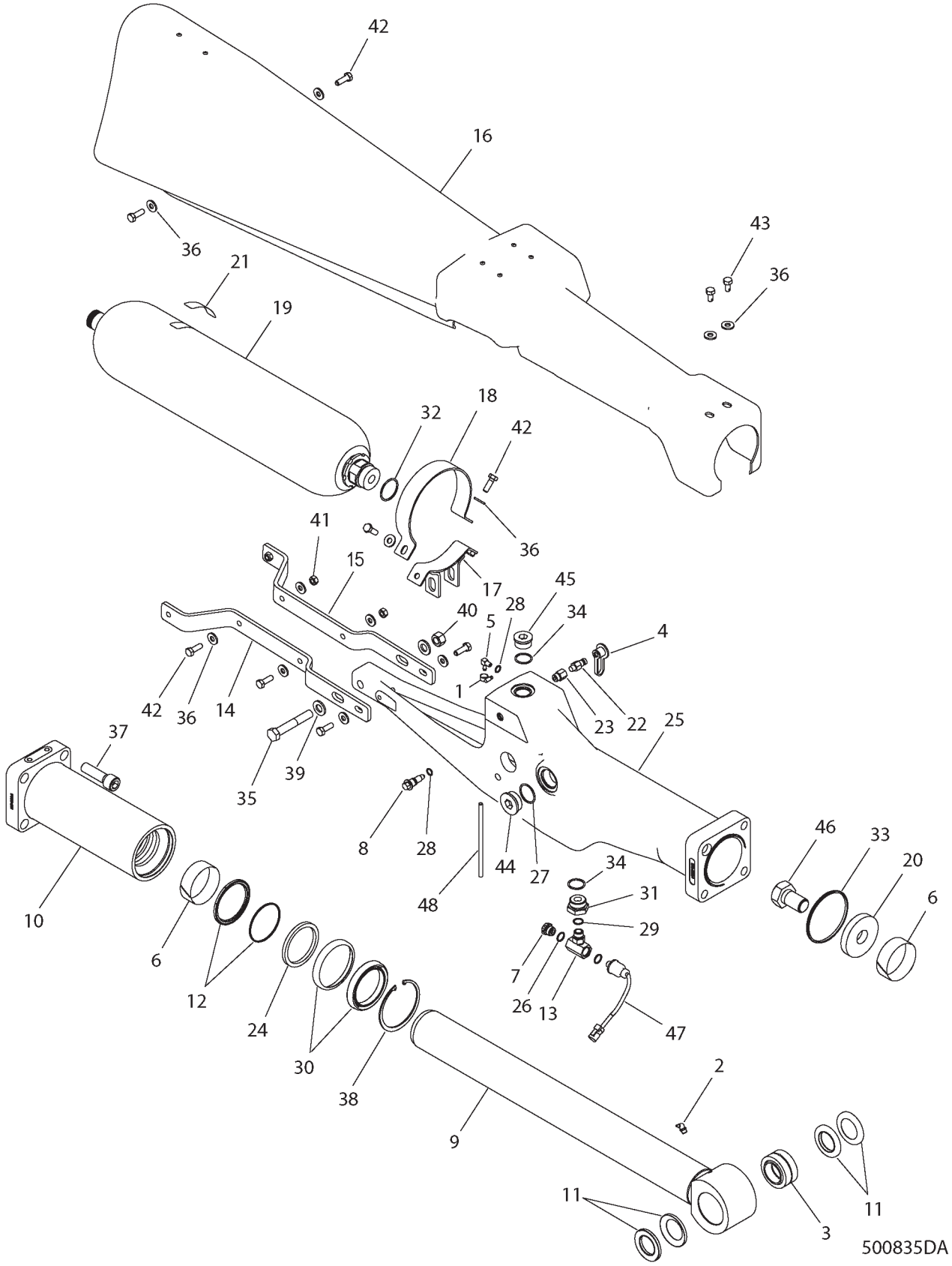

TENSIONER GP-BELT - LH
500835D1

ITEM	NUMBER	QTY	DESCRIPTION
-	500835D1	--	TENSIONER GP-BELT [A] (NOT SERVICED)
1	CH1P-4278	1	CLAMP-HOSE 5.5-15.88 ID X 8
2	CH3B-8486	1	FITTING-ZERK 45 DEG 2 NPTF ZN
3	CH4D-4431	1	BEARING-SLF ALNG44.45 X 71.438
4	400323X1	1	CAP-DUST 12.6 DIA -RUBBER
5	CH6V-6757	1	ELBOW-90DEG 4NPTFX6.35 OD BARB
6	CH8C-9101	2	RING-WEAR 82.5 IDX1.5X28.25
7	CH108-5985	1	VALVE-DISC RELIEF 8STOR
8	CH119-9708	2	VALVE-NEEDLE M12X1.75-6G HEX
9	127-9562	1	ROD AS
10	127-9564	1	GUIDE
11	CH164-0909	2	SEAL-PIN 11.29 PINX71.4ODX6.35
12	CH167-2209	1	SEAL AS-98.83 BORE X 82.5 ROD
13	CH175-2851	1	TEE-8STOR X 8STOR X 5STOR
14	178-1202	1	BRACKET AS.-RH
15	178-1203	1	BRACKET AS.-LH
16	180-3669	1	GUARD AS-LH
17	184-0790	1	SUPPORT AS.-ACCUMULATOR
18	189-1711	1	CLAMP-SUPPORT
19	189-3165	1	ACCUMULATOR AS.
20	CH195-1104	1	SPACER 30.5 IDX92 ODX15MM
21	CH208-1663	1	FILM-WARNING ACCUMULATOR
22	CH110-6349	1	NIPPLE-QUICK CONNECT 4STOR
23	CH148-8305	1	ADAPTER AS-6 STOR X 4 STOR
24	CH167-2320	1	SEAL-UCUP 95.3 BORE X 82.5 ROD
25	176-2966	1	CYLINDER-LH (TENSIONER)
26	CH1J-9671	1	SEAL-O-RING 10.52IDX1.83DIA
27	400593X1	1	SEAL-O-RING 37.46 IDX3 DIA
28	400318X1	2	SEAL-O-RING (11.89ID X 1.98 DIA)
29	CH3K-0360	2	SEAL-O-RING 16.36IDX2.21DIA
30	500687D1	1	SEAL-WIPER(DOUBLE LIP)
31	CH5P-5777	1	ADAPTER-16 STOR X 8 STOR
32	CH6K-6307	1	SEAL-O RING 43.69 IDX3DIA
33	CH6V-1657	1	SEAL-RECT 116.4ODX3.4WX4.95THK
34	400376X1	2	SEAL-O-RING 29.74 IDX2.95 DIA
35	WR520610	1	BOLT-M16-2.0X100,CL10.9,ZN,HHD
36	CH7X-7729	12	WASHER-11IDX5ODX3MM
37	CH7Y-5217	4	BOLT-SOCKET M20X2.5X70
38	CH8D-3886	1	RING RETAIN INT 114.05 ODX2.8
39	CH8T-4122	2	WASHER HARD-17IDX32ODX3.5MM
40	CH8T-4132	1	NUT-M16X2X14.8
41	WR522218	2	NUT-M10-1.5,CL10.9,ZN,H,REG
42	400058X1	8	BOLT-M10X1.5X30 ZNDI HHD 10.9
43	400228X1	2	BOLT-M10X1.5X20 ZNDI LK 10.9
44	CH9S-8010	1	PLUG-20 STOR HEX SOCKET
45	400375X1	1	PLUG-16 STOR ZN HSHD
46	CH9X-2199	1	BOLT-M30X3.5X50 HHD 10.9
47	500834D1	1	SENSOR GP-PRESSURE
48	CH5P-6442	AR	HOSE-BULK RUBBER 6.35ID (18CM)

[A] PART OF
156-4883 FRAME AR TRACK-LH

500835DA
PR: t05i29k58b0293

TENSIONER GP-BELT - RH
500836D1

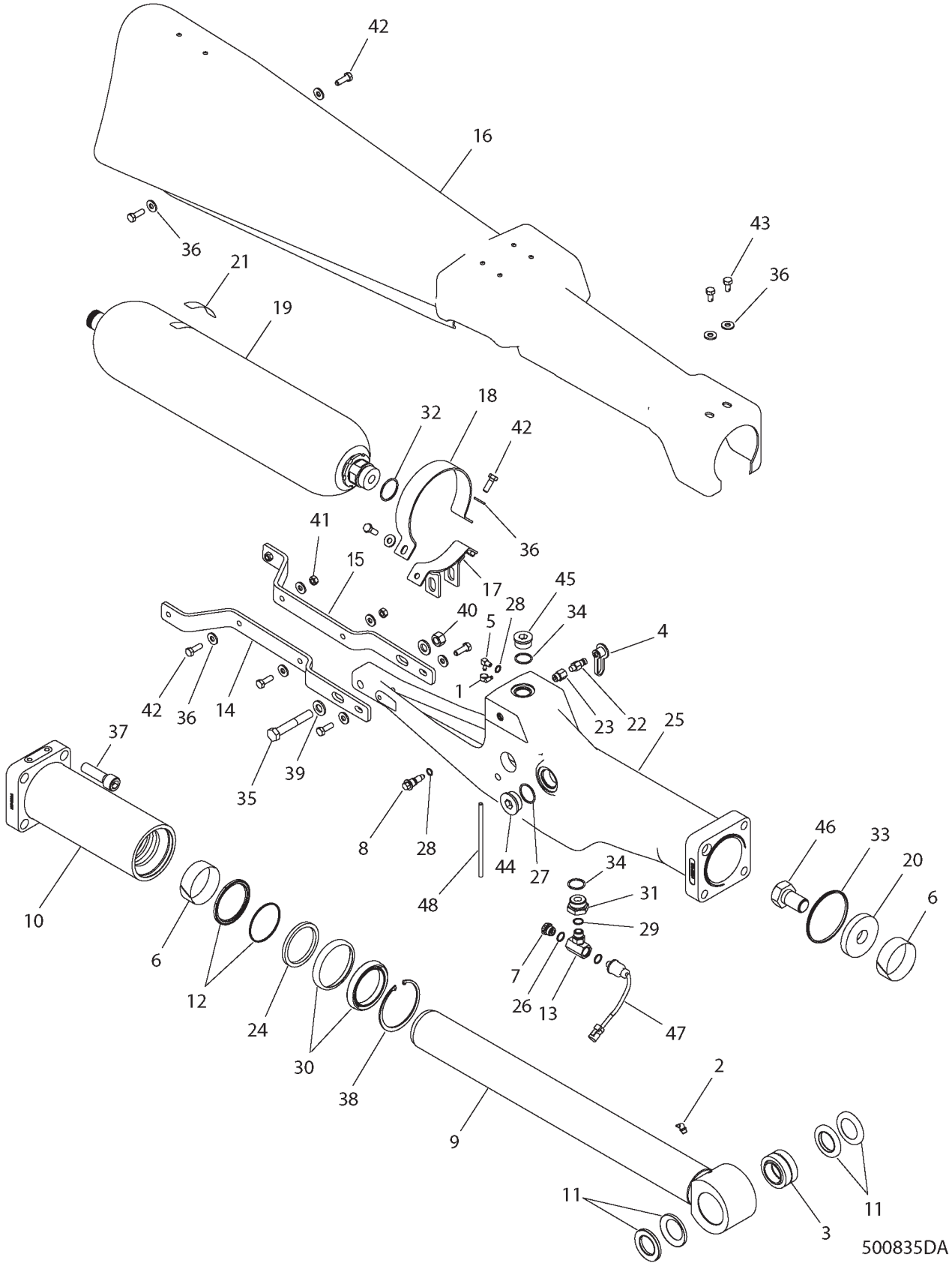

TENSIONER GP-BELT - RH
500836D1

ITEM	NUMBER	QTY	DESCRIPTION
-	500836D1	--	TENSIONER GP-BELT [A] (NOT SERVICED)
1	CH1P-4278	1	CLAMP-HOSE 5.5-15.88 ID X 8
2	CH3B-8486	1	FITTING-ZERK 45 DEG 2 NPTF ZN
3	CH4D-4431	1	BEARING-SLF ALNG44.45 X 71.438
4	400323X1	1	CAP-DUST 12.6 DIA -RUBBER
5	CH6V-6757	1	ELBOW-90DEG 4NPTFX6.35 OD BARB
6	CH8C-9101	2	RING-WEAR 82.5 IDX1.5X28.25
7	CH108-5985	1	VALVE-DISC RELIEF 8STOR
8	CH119-9708	2	VALVE-NEEDLE M12X1.75-6G HEX
9	127-9562	1	ROD AS
10	127-9564	1	GUIDE
11	CH164-0909	2	SEAL-PIN 11.29 PINX71.4ODX6.35
12	CH167-2209	1	SEAL AS-98.83 BORE X 82.5 ROD
13	CH175-2851	1	TEE-8STOR X 8STOR X 5STOR
14	178-1202	1	BRACKET AS.-RH
15	178-1203	1	BRACKET AS.-LH
16	180-3667	1	GUARD AS.-RH
17	184-0790	1	SUPPORT AS.-ACCUMULATOR
18	189-1711	1	CLAMP-SUPPORT
19	189-3165	1	ACCUMULATOR AS.
20	CH195-1104	1	SPACER 30.5 IDX92 ODX15MM
21	CH208-1663	1	FILM-WARNING ACCUMULATOR
22	CH110-6349	1	NIPPLE-QUICK CONNECT 4STOR
23	CH148-8305	1	ADAPTER AS-6 STOR X 4 STOR
24	CH167-2320	1	SEAL-UCUP 95.3 BORE X 82.5 ROD
25	176-2968	1	CYLINDER-RH (TENSIONER)
26	CH1J-9671	1	SEAL-O-RING 10.52IDX1.83DIA
27	400593X1	1	SEAL-O-RING 37.46 IDX3 DIA
28	400318X1	2	SEAL-O-RING (11.89ID X 1.98 DIA)
29	CH3K-0360	2	SEAL-O-RING 16.36IDX2.21DIA
30	500687D1	1	SEAL-WIPER(DOUBLE LIP)
31	CH5P-5777	1	ADAPTER-16 STOR X 8 STOR
32	CH6K-6307	1	SEAL-O RING 43.69 IDX3DIA
33	CH6V-1657	1	SEAL-RECT 116.4ODX3.4WX4.95THK
34	400376X1	2	SEAL-O-RING 29.74 IDX2.95 DIA
35	WR520610	1	BOLT-M16-2.0X100,CL10.9,ZN,HHD
36	CH7X-7729	12	WASHER-11IDX5ODX3MM
37	CH7Y-5217	4	BOLT-SOCKET M20X2.5X70
38	CH8D-3886	1	RING RETAIN INT 114.05 ODX2.8
39	CH8T-4122	2	WASHER HARD-17IDX32ODX3.5MM
40	CH8T-4132	1	NUT-M16X2X14.8
41	WR522218	2	NUT-M10-1.5,CL10.9,ZN,H,REG
42	400058X1	8	BOLT-M10X1.5X30 ZNDI HHD 10.9
43	400228X1	2	BOLT-M10X1.5X20 ZNDI LK 10.9
44	CH9S-8010	1	PLUG-20 STOR HEX SOCKET
45	400375X1	1	PLUG-16 STOR ZN HSHD
46	CH9X-2199	1	BOLT-M30X3.5X50 HHD 10.9
47	500834D1	1	SENSOR GP-PRESSURE
48	CH5P-6442	AR	HOSE-BULK RUBBER 6.35ID (18CM)

[A] PART OF
156-4882 FRAME AR TRACK-RH

500835DA
PR: t05i29k58b0294

BOGIE GP - 130-4818

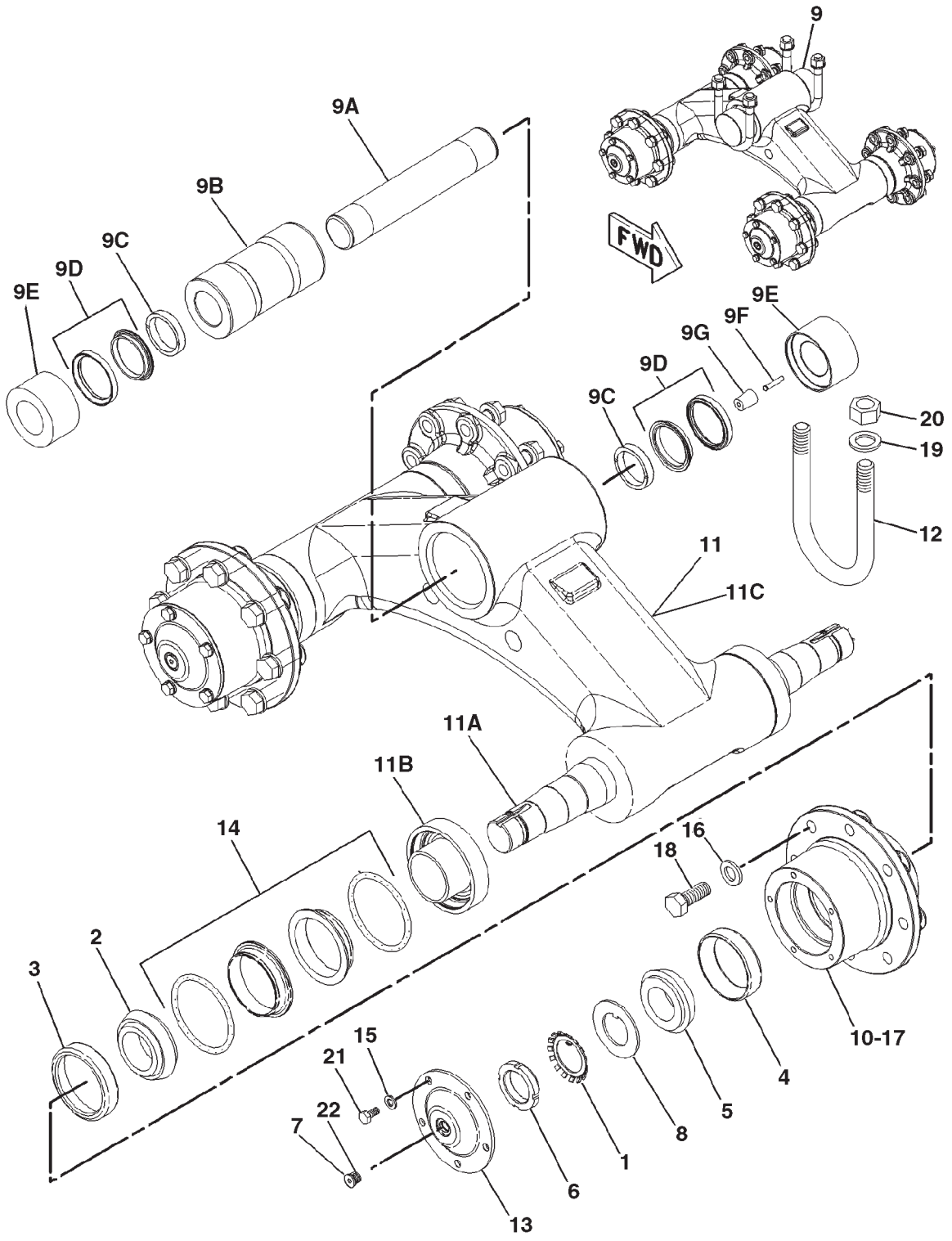

0862331A

BOGIE GP - 130-4818

ITEM	NUMBER	QTY	DESCRIPTION
-	130-4818	--	BOGIE GP [A] (NOT SERVICED)
1	CH1N-5970	4	LOCKWASHER
2	CH5P-9651	4	CONE-BEARING
3	CH5P-9652	4	CUP-BEARING
4	CH6S-6031	4	CUP-BEARING
5	CH6S-6032	4	CONE-BEARING
6	CH8B-7614	4	NUT-BEARING
7	CH9S-8003	4	PLUG
8	400075X1	4	WASHER-BRG (40.46X69.85X3)
9	500925D1	1	PIN GP (INCLUDES 9A THRU 9G)
9A	-----	1	PIN-TRACK
9B	-----	1	BEARING-SLEEVE
9C	-----	2	RING-THRUST
9D	-----	2	SEAL ASM
9E	-----	2	COLLAR
9F	CH6Y-0473	1	PLUG-CLEAR
9G	CH7G-4332	1	STOPPER
10	127-9561	4	HUB
11	155-2939	1	BOGIE ASM (INCLUDES 11A THRU 11C)
11A	154-8263	2	AXLE
11B	154-8264	4	RETAINER
11C	-----	1	BOGIE MINOR (ORDER COMPLETE AS)
12	400260X1	2	U-BOLT
13	156-6084	4	COVER
14	175-7513	4	SEAL GP-DUO-CONE
14A	CH8H-2262	2	SEAL-O-RING
14B	CH175-7514	2	SEAL-RING
15	400339X1	20	WASHER-HARD (8.8X16X2)
16	400082X1	32	WASHER (17.5X30X3.5)
17	CH215-9463	4	GASKET
18	400191X1	32	BOLT (M16X2X40MM)
19	400080X1	4	WASHER-PLATED (22X35X3.5)
20	400286X1	4	NUT (M20X2.5)
21	400227X1	20	BOLT (M8X1.25X16MM)
22	CH1J-9671	4	SEAL-O-RING

[A] PART OF 156-4882; 156-4883 FRAME AR

0862331A
PR: t05i29k58b0295

FRAME AR-RH
156-4882

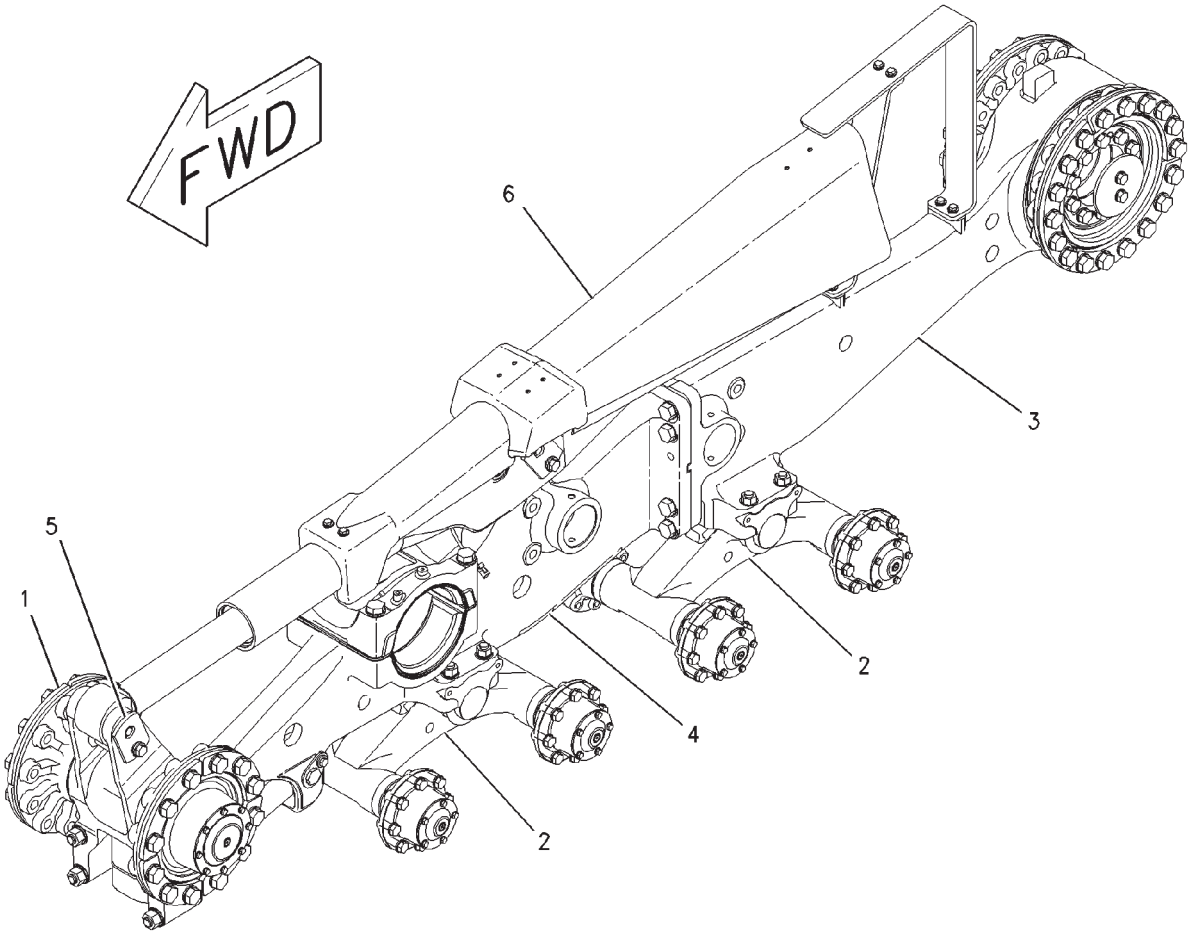

00838123

FRAME AR-RH
156-4882

ITEM	NUMBER	QTY	DESCRIPTION
-	502328D1	--	FRAME AS-TRACK-RH (OPTION)
-	156-4882	--	FRAME AR [A] (NOT SERVICED)
1	127-9545	1	IDLER GP (NOT SERVICED) (SEE BREAKDOWN FOR COMPONENTS)
2	130-4818	2	BOGIE GP (NOT SERVICED) (SEE BREAKDOWN FOR COMPONENTS)
3	156-4884	1	SUPPORT GP-DRIVE WHEEL (RH) (SEE BREAKDOWN FOR COMPONENTS)
4	163-0678	1	FRAME GP-TRACK ROLLER (NOT SERVICED) (SEE BREAKDOWN FOR COMPONENTS)
5	184-6718	1	MOUNTING GP-TENSIONER (NOT SERVICED) (SEE BREAKDOWN FOR COMPONENTS)
6	500836D1	1	BELT TENSIONER GP (NOT SERVICED) (SEE BREAKDOWN FOR COMPONENTS)
7	502523D1	4	CAP-PLUG (NOT SHOWN)

[A] PART OF 156-4881; 177-9947
UNDERCARRIAGE AR;
502328D1 FRAME AS

00838123
PR: t05i29k58b0296

FRAME AR-LH - 156-4883

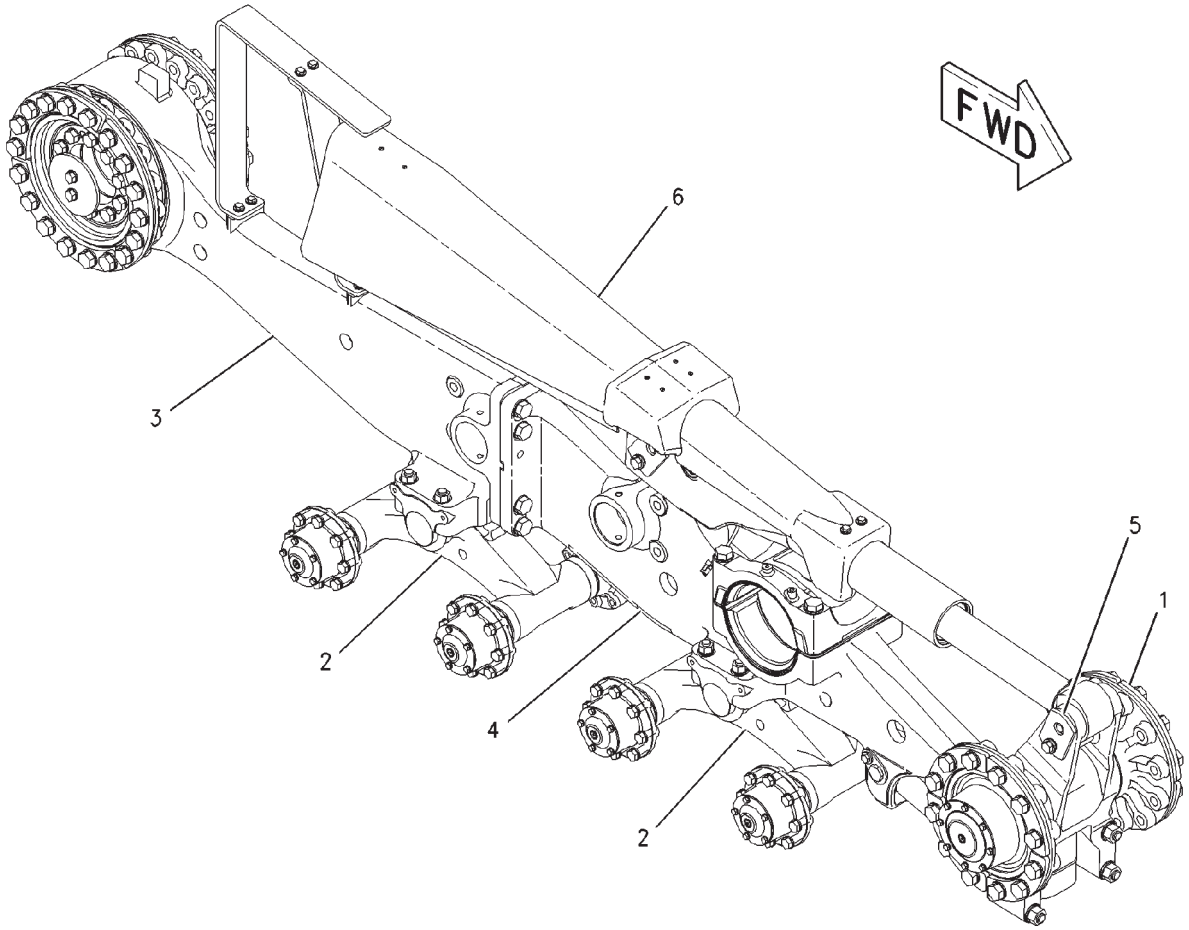

00837737

FRAME AR-LH - 156-4883

ITEM	NUMBER	QTY	DESCRIPTION
-	502327D1	--	FRAME AS-TRACK-LH (OPTION)
-	156-4883	--	FRAME AR [A] (NOT SERVICED)
1	127-9545	1	IDLER GP (NOT SERVICED) (SEE BREAKDOWN FOR COMPONENTS)
2	130-4818	2	BOGIE GP (NOT SERVICED) (SEE BREAKDOWN FOR COMPONENTS)
3	156-4885	1	SUPPORT GP-DRIVE WHEEL(LH)(NOT SERVICED) (SEE BREAKDOWN FOR COMPONENTS)
4	163-0678	1	FRAME GP-TRACK ROLLER (NOT SERVICED) (SEE BREAKDOWN FOR COMPONENTS)
5	184-6718	1	MOUNTING GP-TENSIONER (NOT SERVICED) (SEE BREAKDOWN FOR COMPONENTS)
6	500835D1	1	BELT TENSIONER GP (NOT SERVICED) (SEE BREAKDOWN FOR COMPONENTS)
7	502523D1	4	CAP-PLUG (NOT SHOWN)

[A] PART OF 156-4881; 177-9946
UNDERCARRIAGE AR;
502327D1 FRAME AS-TRACK-LH

00837737
PR: t05i29k58b0297

FRAME GP-TRACK ROLLER - 163-0678

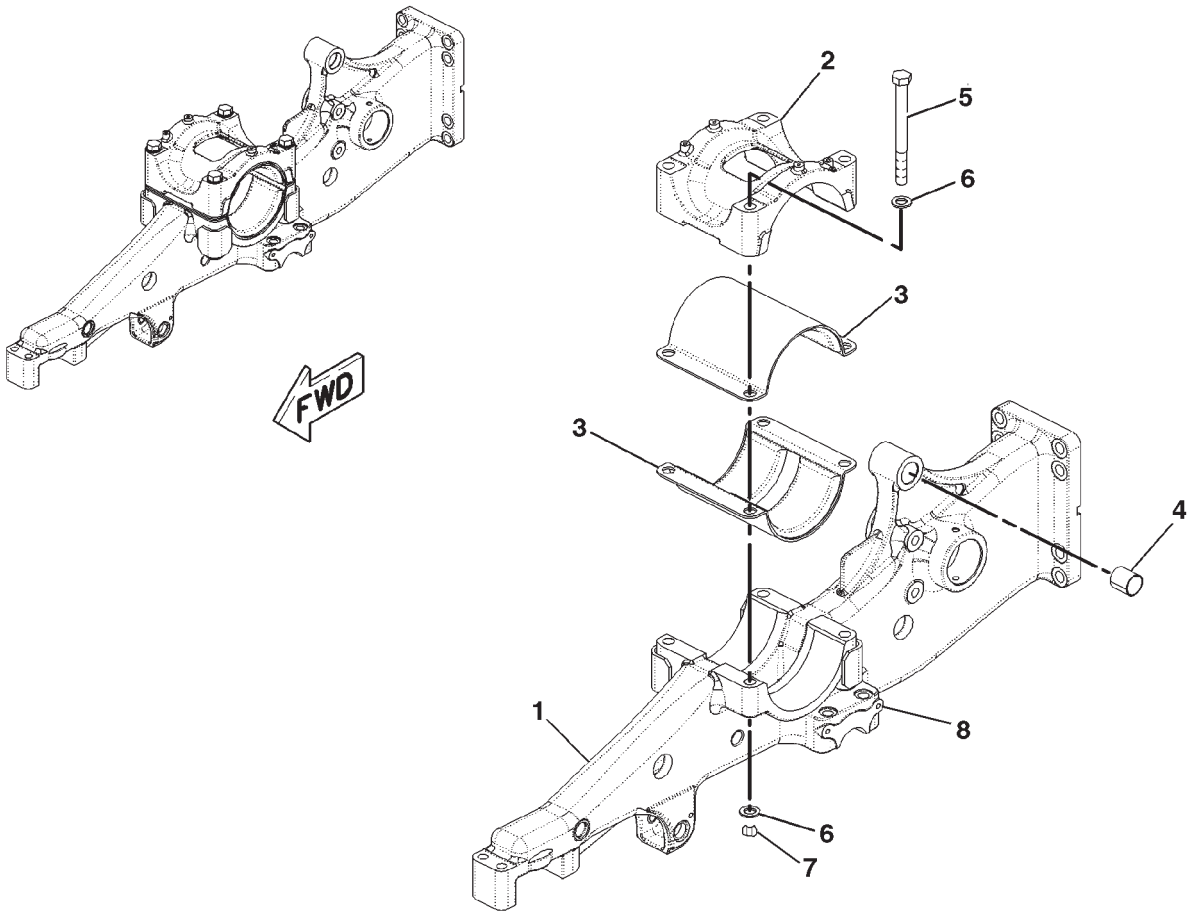

0850720A

FRAME GP-TRACK ROLLER - 163-0678

ITEM	NUMBER	QTY	DESCRIPTION
-	163-0678	--	FRAME GP-TRACK ROLLER [A] (NOT SERVICED)
1	197-3667	1	FRAME
2	192-7901	1	CAP
3	CH214-4661	2	BEARING ASM
4	CH168-7710	1	BEARING
5	400014X1	4	BOLT (M24X3X255MM)
6	CH8T-1482	4	WASHER-HARD (26X50X8)
7	223-4304	4	NUT-RETAINER
8	CH193-5915	4	PLUG

[A] PART OF 156-4882; 156-4883 FRAME AR

0850720A
PR: t05i29k58b0298

GUARD GP-LINES - 201-9927
TENSIONER WIRE

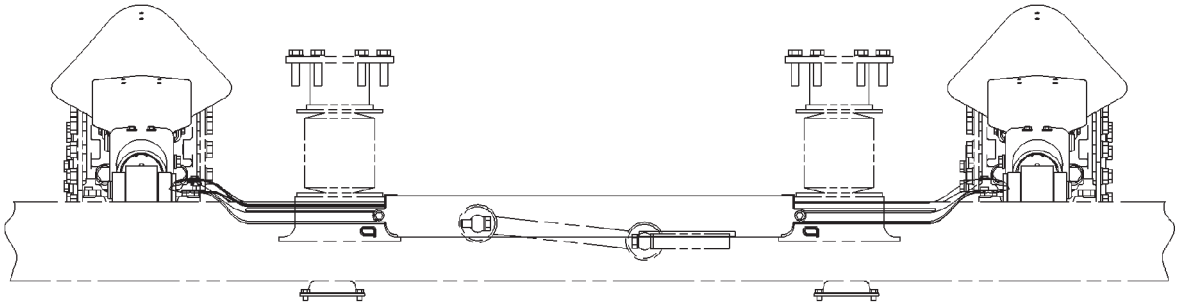

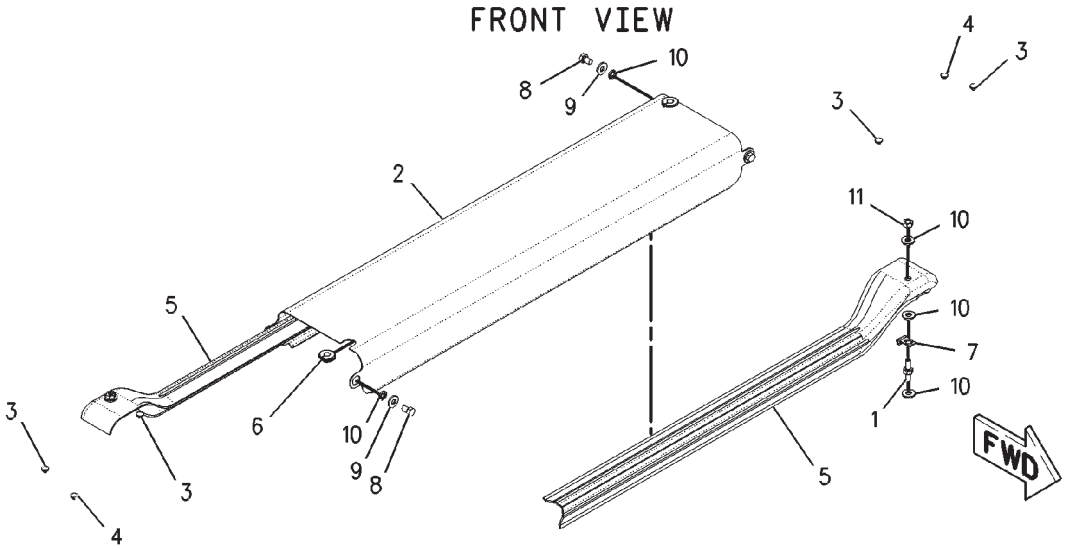

00853301

GUARD GP-LINES - 201-9927
TENSIONER WIRE

ITEM	NUMBER	QTY	DESCRIPTION
-	201-9927	--	GUARD GP-LINES [A] (NOT SERVICED)
1	CH101-3129	2	STUD (M10X1.5)
2	201-9932	1	COVER
3	400289X1	4	PLUG-PROTECTIVE (M7)
4	CH193-5914	2	PLUG-PROTECTIVE (M10)
5	201-9930	2	GUARD-WIRE
6	CH5P-8440	2	GROMMET
7	CH5P-9085	2	CLIP
8	400023X1	4	BOLT (M10X1.5X16MM)
9	CH7X-0561	4	WASHER-HARD (12X18.5X3)
10	CH7X-7729	10	WASHER (11X25X3)
11	WR522218	2	NUT (M10X1.5)
12	CH7K-1181	4	STRAP-CABLE (0.19X4) (NOT SHOWN)

[A] PART OF 156-4881 UNDERCARRIAGE AR

00853301
PR: t05i29k58b0299

GUARD GP-LINES - 201-9928

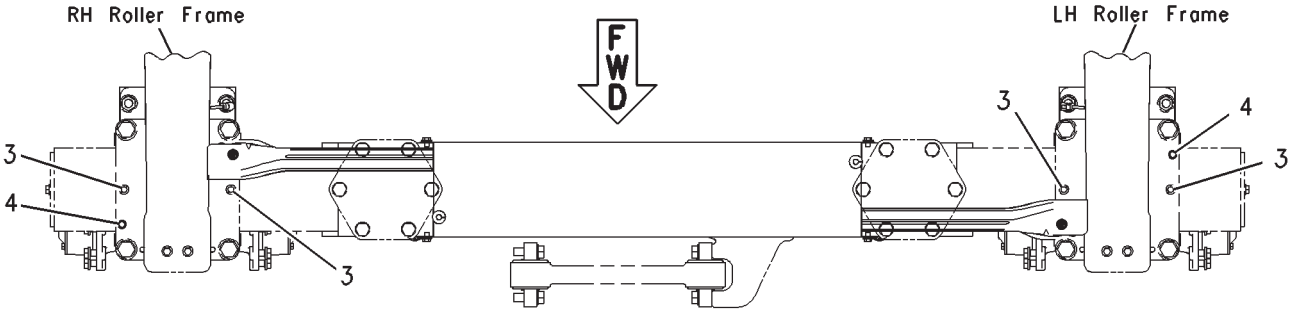

TOP VIEW

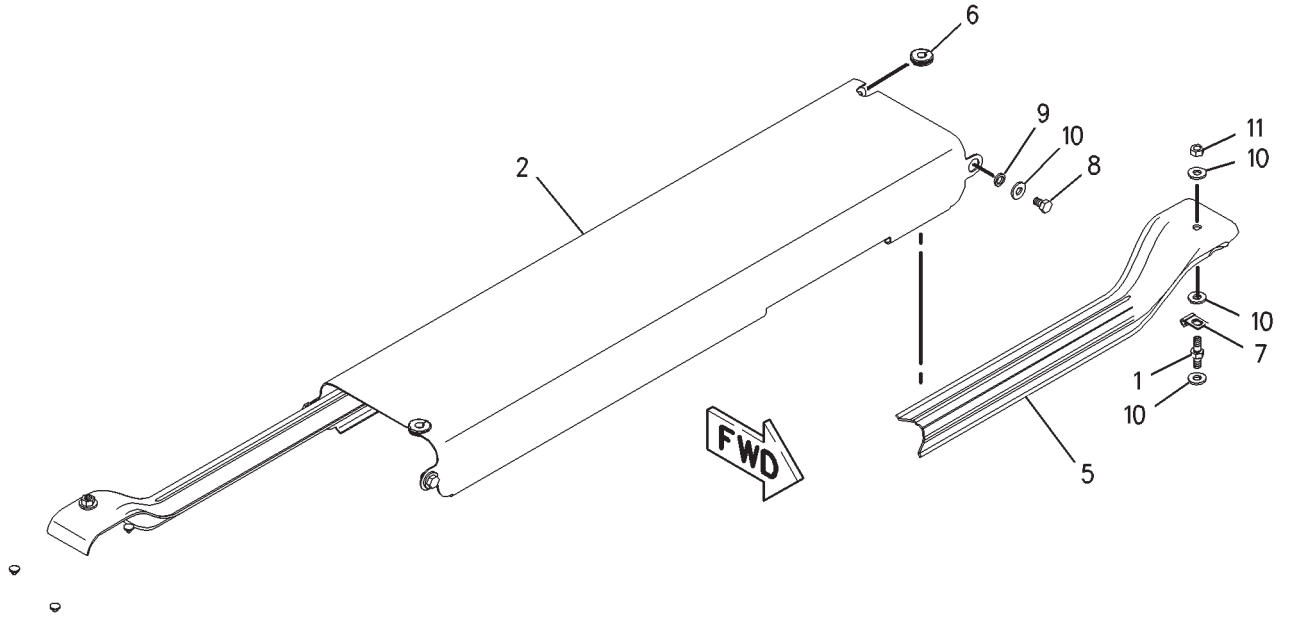

00853303

GUARD GP-LINES - 201-9928

ITEM	NUMBER	QTY	DESCRIPTION
			(TENSIONER WIRE)
-	201-9928	--	GUARD GP-LINES
1	CH101-3129	2	STUD (M10X1.5 THD)
2	201-9932	1	COVER
3	400289X1	4	PLUG-PROTECTIVE (M7)
4	CH193-5914	2	PLUG-PROTECTIVE (M10)
5	201-9931	2	GUARD-WIRE
6	CH5P-8440	2	GROMMET
7	CH5P-9085	2	CLIP
8	400023X1	4	BOLT (M10X1.5X16MM)
9	CH7X-0561	4	WASHER-HARD
10	CH7X-7729	10	WASHER (11X25X3MM THK)
11	WR522218	2	NUT (M10X1.5 THD)
12	CH7K-1181	4	STRAP-CABLE (0.19X4) (NOT SHOWN)

[A] PART OF 177-9946 UNDERCARRIAGE AR

00853303
PR: t05i29k58b0300

IDLER GP - 127-9545

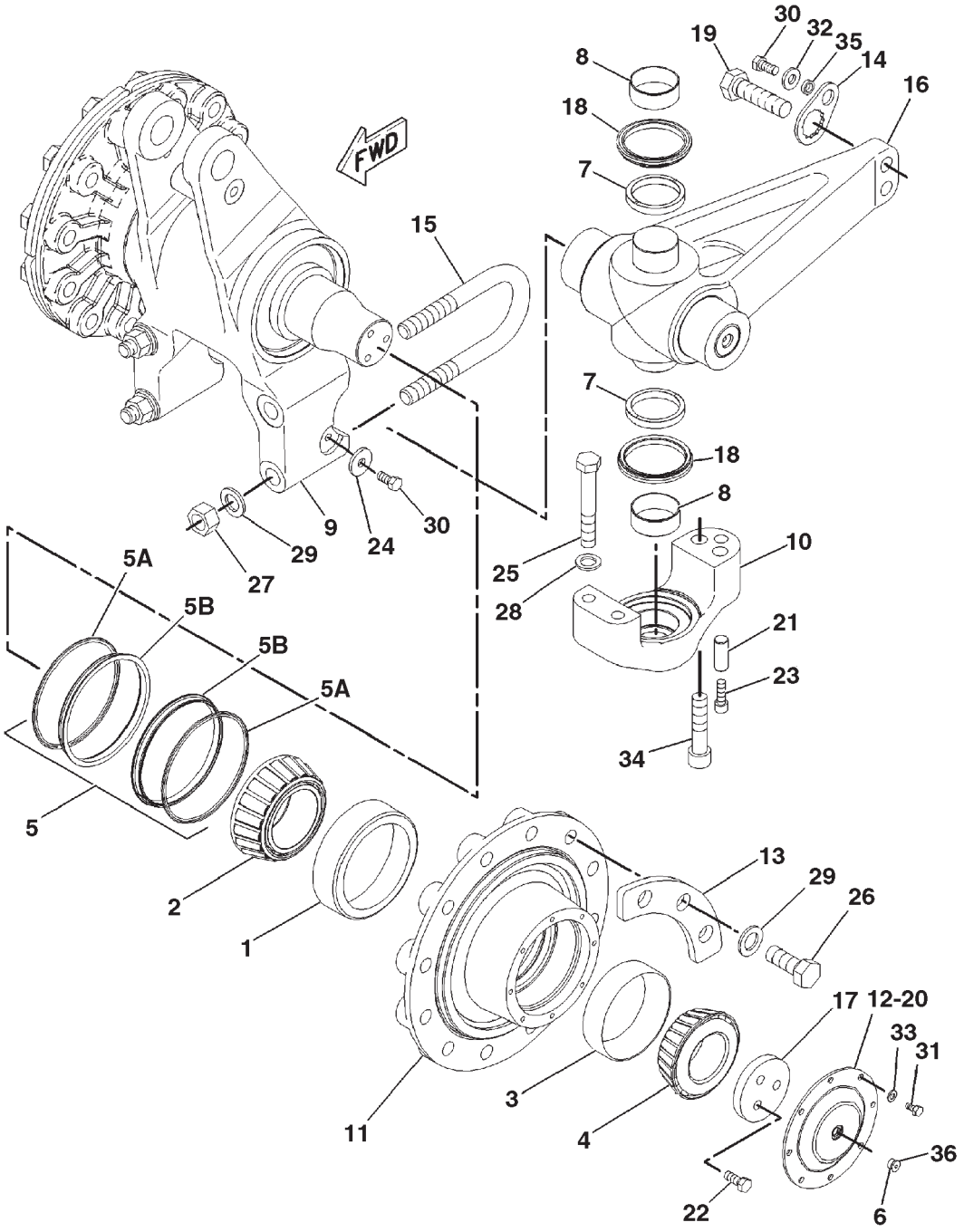

0862342A

IDLER GP - 127-9545

ITEM	NUMBER	QTY	DESCRIPTION
-	127-9545	--	IDLER GP [A] (NOT SERVICED)
1	CH1J-2860	2	CUP-BEARING
2	CH1J-4757	2	CONE-BEARING
3	CH2D-9454	2	CUP-BEARING
4	CH2D-9455	2	CONE-BEARING
5	CH5K-1078	2	SEAL GP-DUO-CONE
6	CH9S-8003	2	PLUG
7	CH9W-9625	2	RING-THRUST
8	CH108-6075	2	BUSHING
9	CH127-9548	1	LINK-SWING
10	CH127-9553	1	CAP
11	CH127-9554	2	HUB
12	CH156-4897	2	COVER
13	CH156-4900	8	PLATE
14	CH202-8633	2	PLATE-LOCK
15	400261X1	2	U-BOLT
16	CH160-3957	1	LEVER GP-IDLER
	500925D1	1	PIN AS (SERVICED BY ** ITEMS)
	CH6Y-0473	1	**PLUG-CLEAR
	CH7G-4332	1	**STOPPER
17	CH160-5223	2	PLATE
18	501934D1	2	SEAL ASM
19	400009X1	2	BOLT (M24X3X88MM)
20	CH215-9464	2	GASKET
21	CH4K-7239	1	DOWEL
22	400227X1	6	BOLT (M12X1.75X30MM)
23	400002X1	1	BOLT-SOCKET HEAD (M12X1.75X35MM)
24	CH7X-0618	2	WASHER-HARD (13.5X40X5)
25	400027X1	2	BOLT (M20X2.5X130MM)
26	400035X1	12	BOLT (M24X3X60MM)
27	CH8T-4001	4	NUT (M24X3)
28	400080X1	2	WASHER-PLATED (22X35X3.5)
29	400081X1	16	WASHER-HARD (26X44X4)
30	400055X1	4	BOLT (M12X1.75X25MM)
31	400227X1	16	BOLT (M8X1.25X16MM)
32	400381X1	2	WASHER-HARD (13.5X30X4)
33	400339X1	16	WASHER-HARD (8.8X16X2)
34	400142X1	2	BOLT-SOCKET HEAD (M20X2.5X90)
35	CH202-9701	2	SPACER (12.95X19.05X5)
36	CH1J-9671	2	SEAL-O-RING

[A] PART OF 156-4882; 156-4883 FRAME AR

0862342A
PR: t05i29k58b0301

MOUNTING GP-IDLER - 177-4589

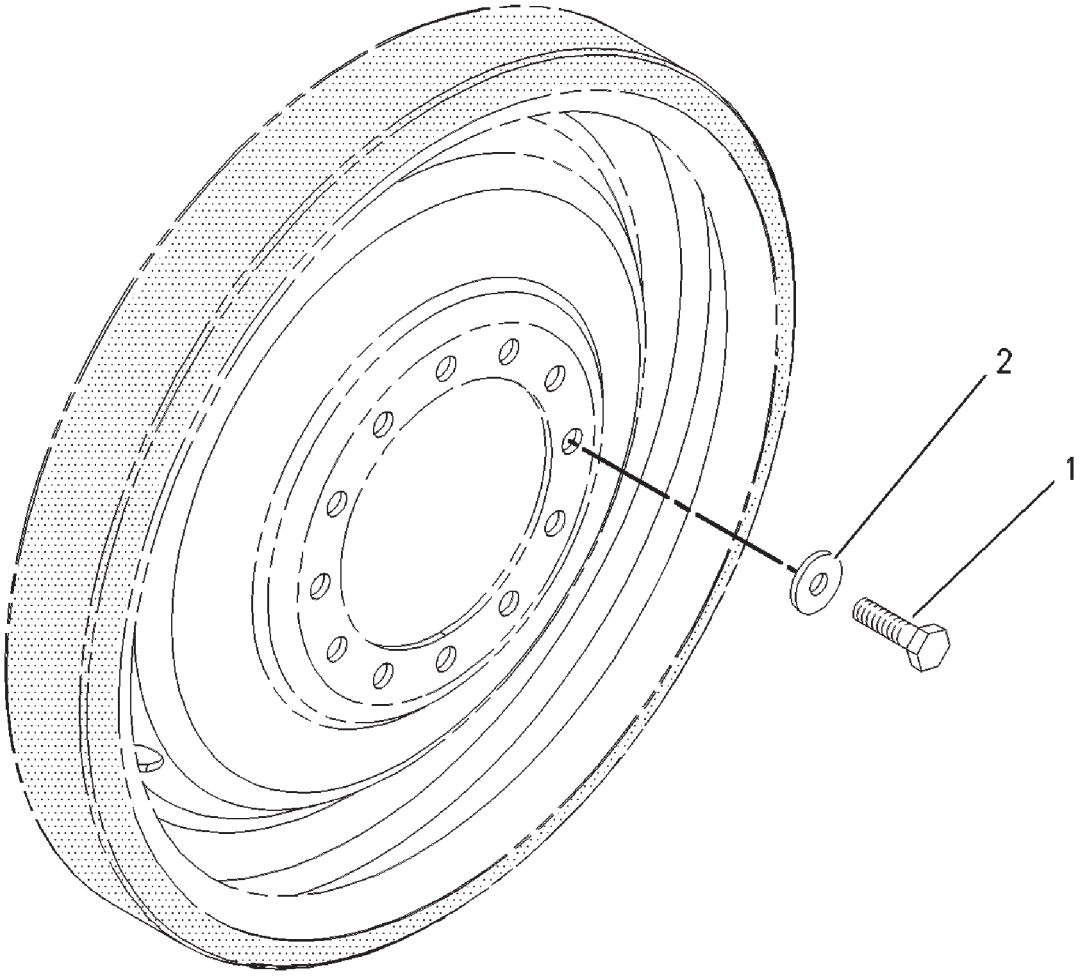

00640046

MOUNTING GP-IDLER - 177-4589

ITEM	NUMBER	QTY	DESCRIPTION
-	177-4589	--	MOUNTING GP-IDLER (NOT SERVICED)
1	400035X1	24	BOLT (M24X3X60MM)
2	400081X1	24	WASHER-HARD (26X44X4)

00640046
PR: t05i29k58b0302

MOUNTING GP-TENSIONER - 184-6718

TRACK BELT

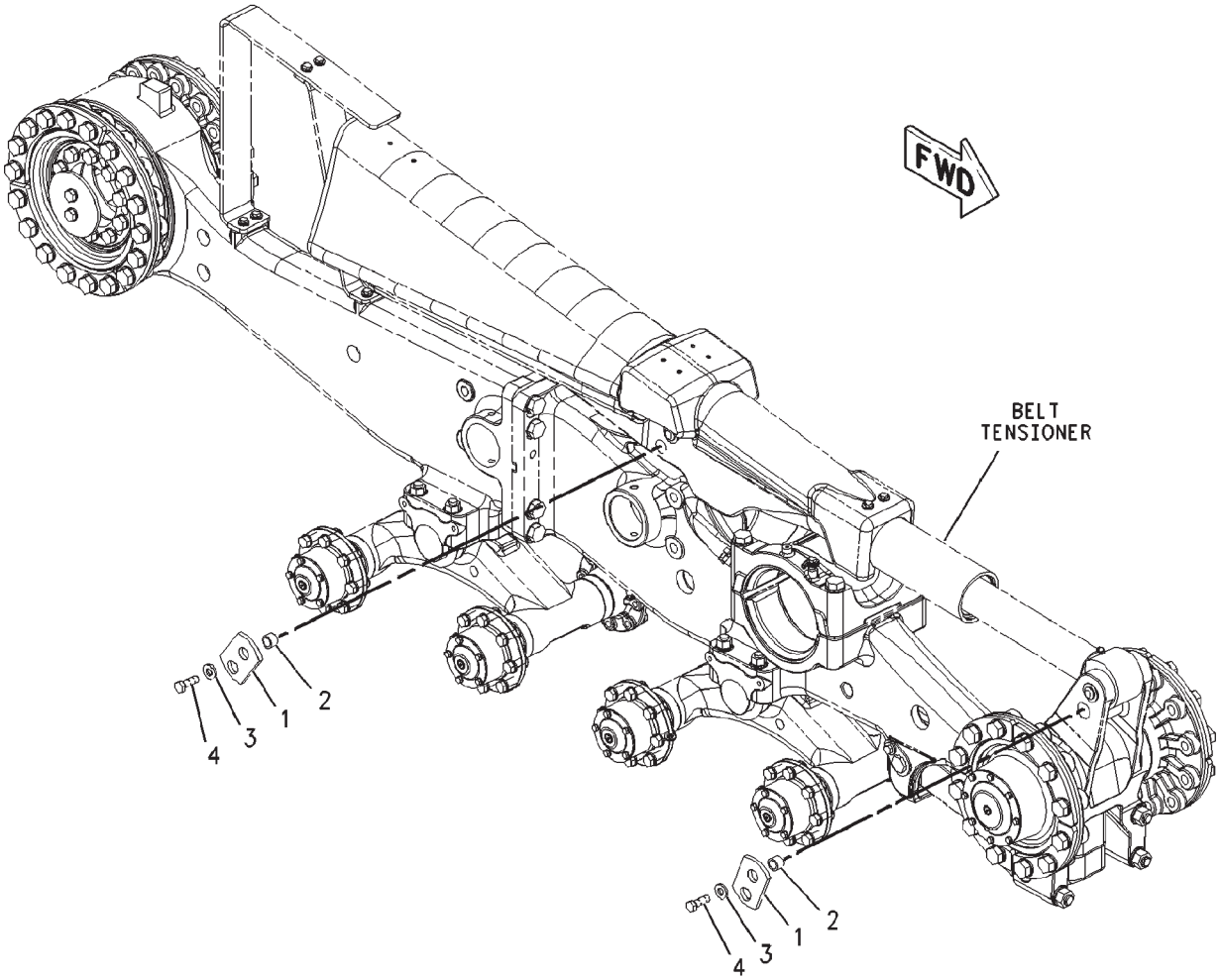

00851415

MOUNTING GP-TENSIONER - 184-6718

TRACK BELT

ITEM	NUMBER	QTY	DESCRIPTION
-	184-6718	--	MOUNTING GP-TENSIONER [A] (NOT SERVICED)
1	CH190-3576	2	PIN ASM
2	CH190-3583	2	SPACER (20X28.6X19)
3	CH7X-0515	2	WASHER-HARD (17X35X5)
4	400244X1	2	BOLT (M16X2.0X45MM)

[A] PART OF 156-4882; 156-4883 FRAME AR

00851415
PR: t05i29k58b0303

ROLLER AR - 156-4891
MIDDLE 112 MM (4.4 IN)

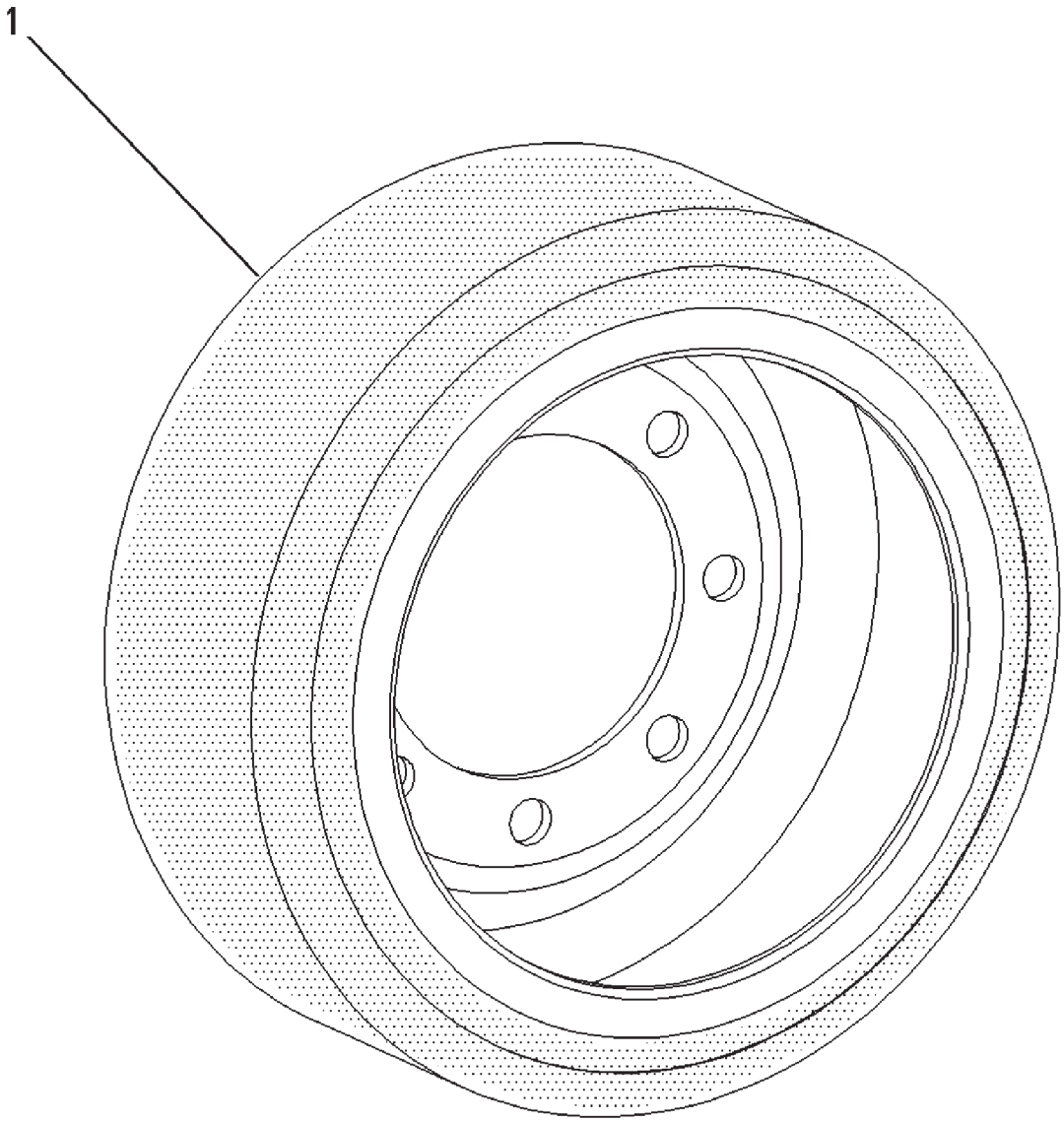

00648929

ROLLER AR - 156-4891
MIDDLE 112 MM (4.4 IN)

ITEM	NUMBER	QTY	DESCRIPTION
-	156-4891	--	ROLLER AR (NOT SERVICED)
1	502931D1	16	ROLLER ASM
-	502159D1	--	ROLLER AR (INCLUDES 8 OF ITEM 1)

00648929
PR: t05i29k58b0304

ROLLER AR - 156-4893
MIDDLE 204 MM (8 IN)

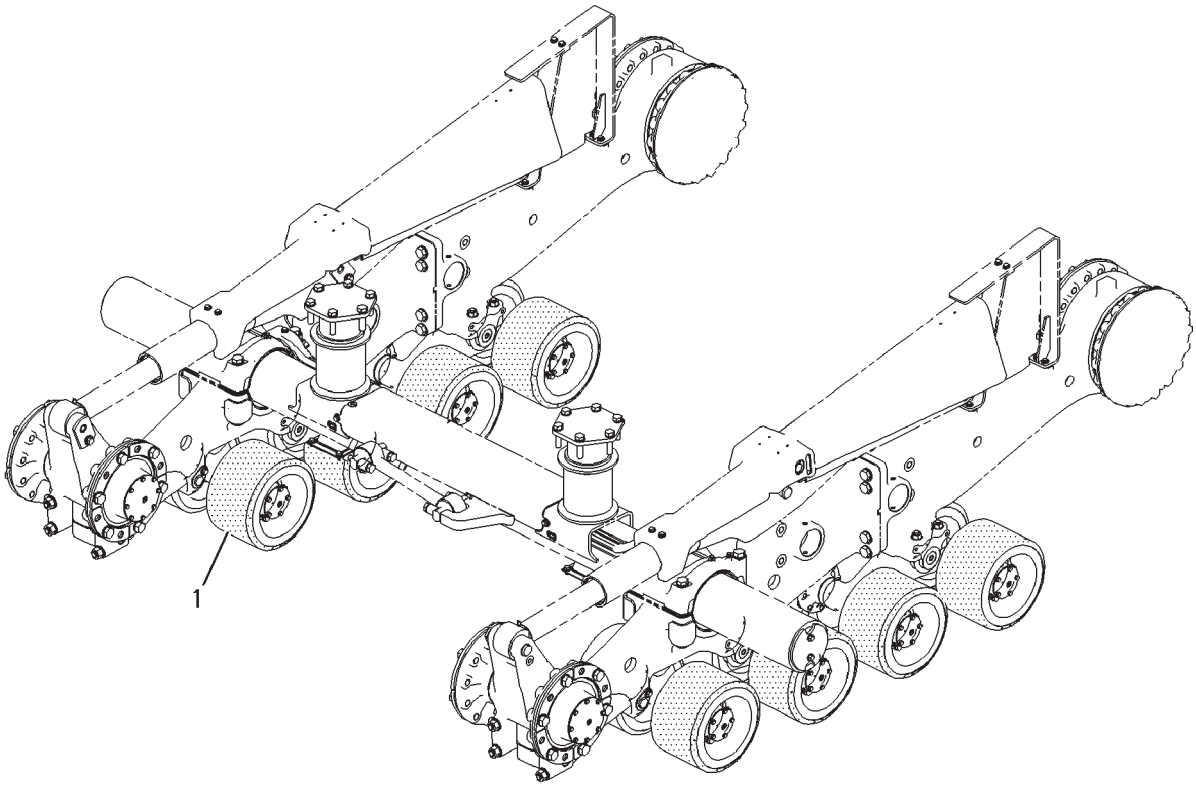

00885773

ROLLER AR - 156-4893
MIDDLE 204 MM (8 IN)

ITEM	NUMBER	QTY	DESCRIPTION
-	502786D1	--	ROLLER AR (FIELD INSTALLED)
-	502914D1	--	ROLLER AR (FACTORY) (NOT SERVICED, ORDER FIELD INSTALLED)
-	156-4893	--	MIDROLLER WHEEL AR [A] (REF) (NOT SERVICED, ORDER FIELD INSTALLED)
1	502932D1	16	ROLLER ASM
-	502162D1	--	ROLLER AR (INCLUDES 8 OF ITEM 1)

[A] PART OF 502768D1;502914D1 ROLLER AS

00885773
PR: t05i29k58b0305

SUPPORT GP-DRIVE WHEEL - 156-4884
RIGHT HAND

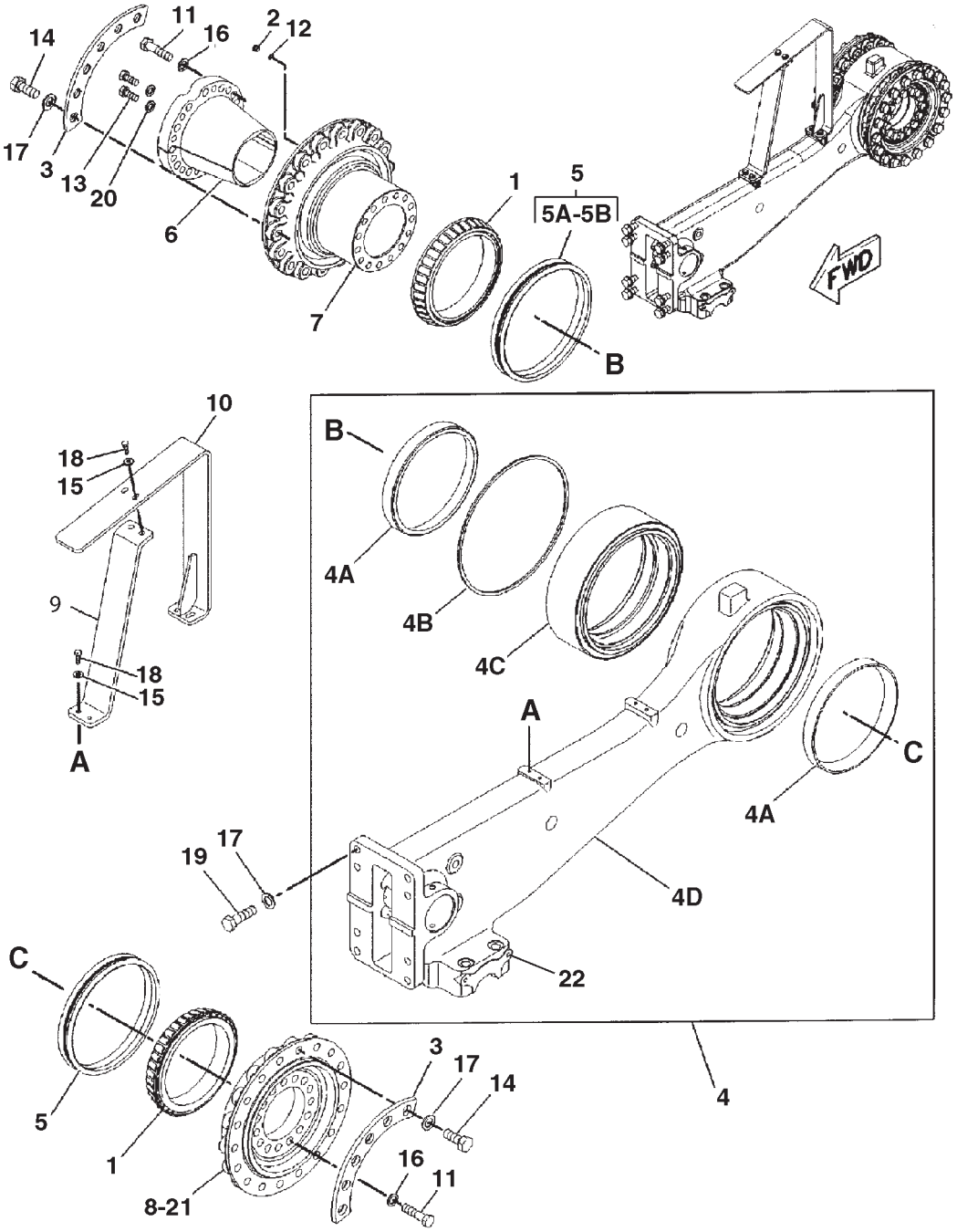

0829713A

SUPPORT GP-DRIVE WHEEL - 156-4884
RIGHT HAND

ITEM	NUMBER	QTY	DESCRIPTION
-	156-4884	--	SUPPORT GP-DRIVE WHEEL [A]
			(NOT SERVICED)
1	CH3D-9132	2	CONE-BEARING
2	CH9S-8003	1	PLUG
3	156-8343	6	PLATE-BACKUP
4	161-1817	1	ARM ASM
4A	CH3D-9133	2	CUP-BEARING
4B	400098X1	1	RING-RETAINING (400 OD X 2.82)
4C	CH190-3391	1	HOUSING ASM
4D	-----	1	ARM-REACTION (ORDER ITEM 4)
5	CH174-4874	2	SEAL GP-DUO-CONE
6	184-4356	1	COLLET
7	500396D2	1	HUB-OUTER
8	500395D2	1	HUB-INNER
9	205-9961	1	BRACKET ASM
	CH8T-3490	2	NUT-WELD (M10X1.5)
10	205-9962	1	BRACKET
11	400272X1	27	BOLT (M20X2.5X80MM)
12	CH1J-9671	1	SEAL-O-RING
13	400191X1	2	BOLT (M16X2X40MM)
14	400035X1	36	BOLT (M24X3X60MM)
15	CH7X-7729	6	WASHER (11X25X3)
16	400080X1	27	WASHER-PLATED (22X35X3.5)
17	400081X1	44	WASHER-HARD (26X44X4)
18	400058X1	6	BOLT (M10X1.5X30MM)
19	400067X1	8	BOLT (M24X3X80MM)
20	400082X1	2	WASHER (17.5X30X3.5)
21	CH1U-8846		SEALANT-GASKET
22	CH193-5915	4	PLUG

[A] PART OF 156-4882 FRAME AR

0829713A
PR: t05i29k58b0306

SUPPORT GP-DRIVE WHEEL - 156-4885
LEFT HAND

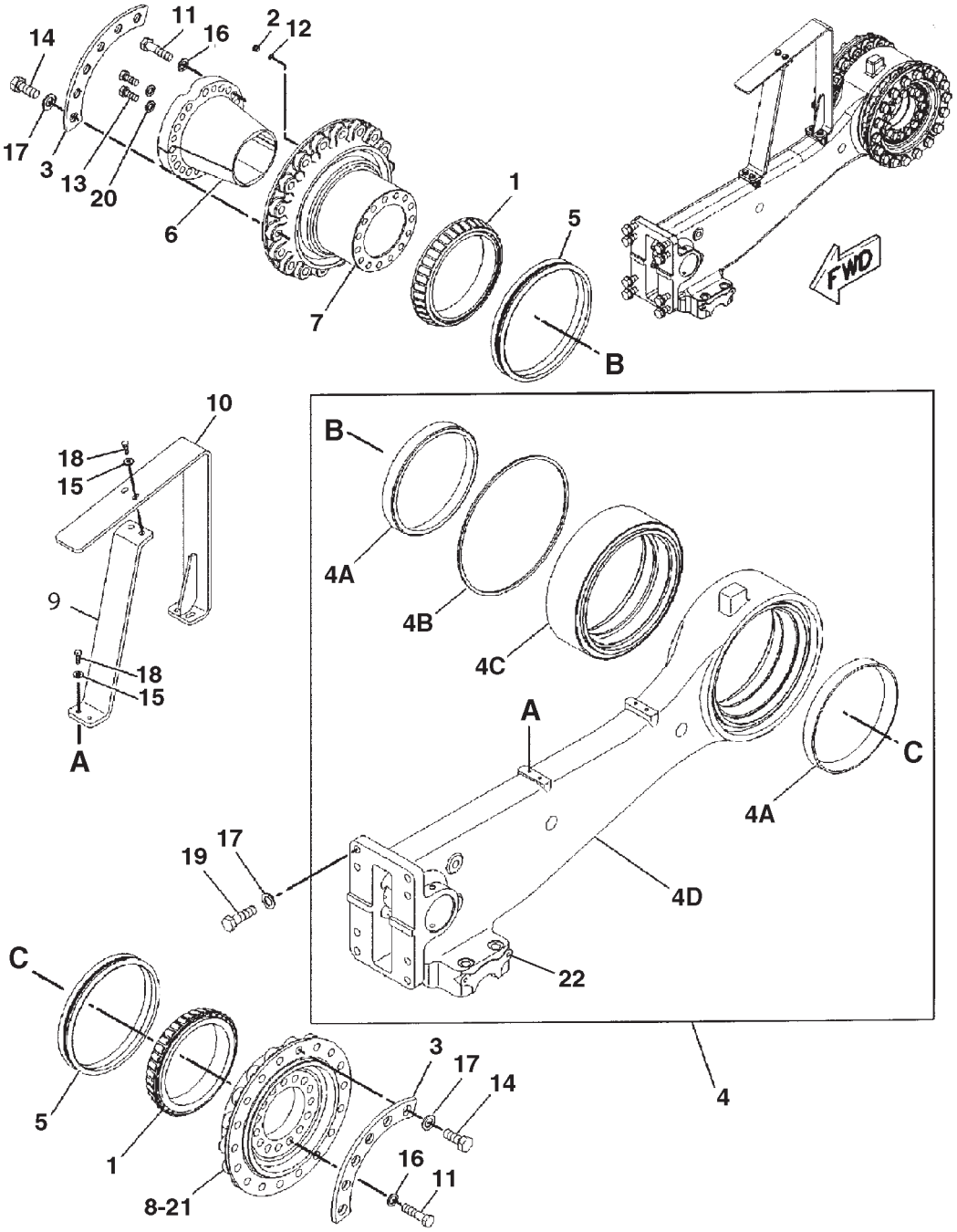

0829713B

SUPPORT GP-DRIVE WHEEL - 156-4885
LEFT HAND

ITEM	NUMBER	QTY	DESCRIPTION
-	156-4885	--	SUPPORT GP-DRIVE WHEEL [A] (NOT SERVICED)
1	CH3D-9132	2	CONE-BEARING
2	CH9S-8003	1	PLUG
3	156-8343	6	PLATE-BACKUP
4	161-1817	1	ARM ASM (ORDER COMPLETE OR 4A THRU 4C)
4A	CH3D-9133	2	CUP-BEARING
4B	400098X1	1	RING-RETAINING (400 OD X 2.82)
4C	CH190-3391	1	HOUSING ASM
4D	-----	1	ARM-REACTION (NOT SERVICED SEPARATELY)
5	CH174-4874	2	SEAL GP-DUO-CONE (ORDER COMPLETE OR
6	184-4356	1	COLLET
7	500396D2	1	HUB-OUTER
8	500395D2	1	HUB-INNER
9	205-9961	1	BRACKET ASM
	CH8T-3490	2	NUT-WELD (M10X1.5)
10	205-9962	1	BRACKET
11	400272X1	27	BOLT (M20X2.5X80MM)
12	CH1J-9671	1	SEAL-O-RING
13	400191X1	2	BOLT (M16X2X40MM)
14	400035X1	36	BOLT (M24X3X60MM)
15	CH7X-7729	6	WASHER (11X25X3)
16	400080X1	27	WASHER-PLATED (22X35X3.5)
17	400081X1	44	WASHER-HARD (26X44X4)
18	400058X1	6	BOLT (M10X1.5X30MM)
19	400067X1	8	BOLT (M24X3X80MM)
20	400082X1	2	WASHER (17.5X30X3.5)
21	CH1U-8846		SEALANT-GASKET
22	CH193-5915	4	PLUG

[A] PART OF 156-4883 FRAME AR

0829713B
PR: t05i29k58b0307

SUPPORT GP-UNDERCARRIAGE - 163-1009
WIDE GAUGE

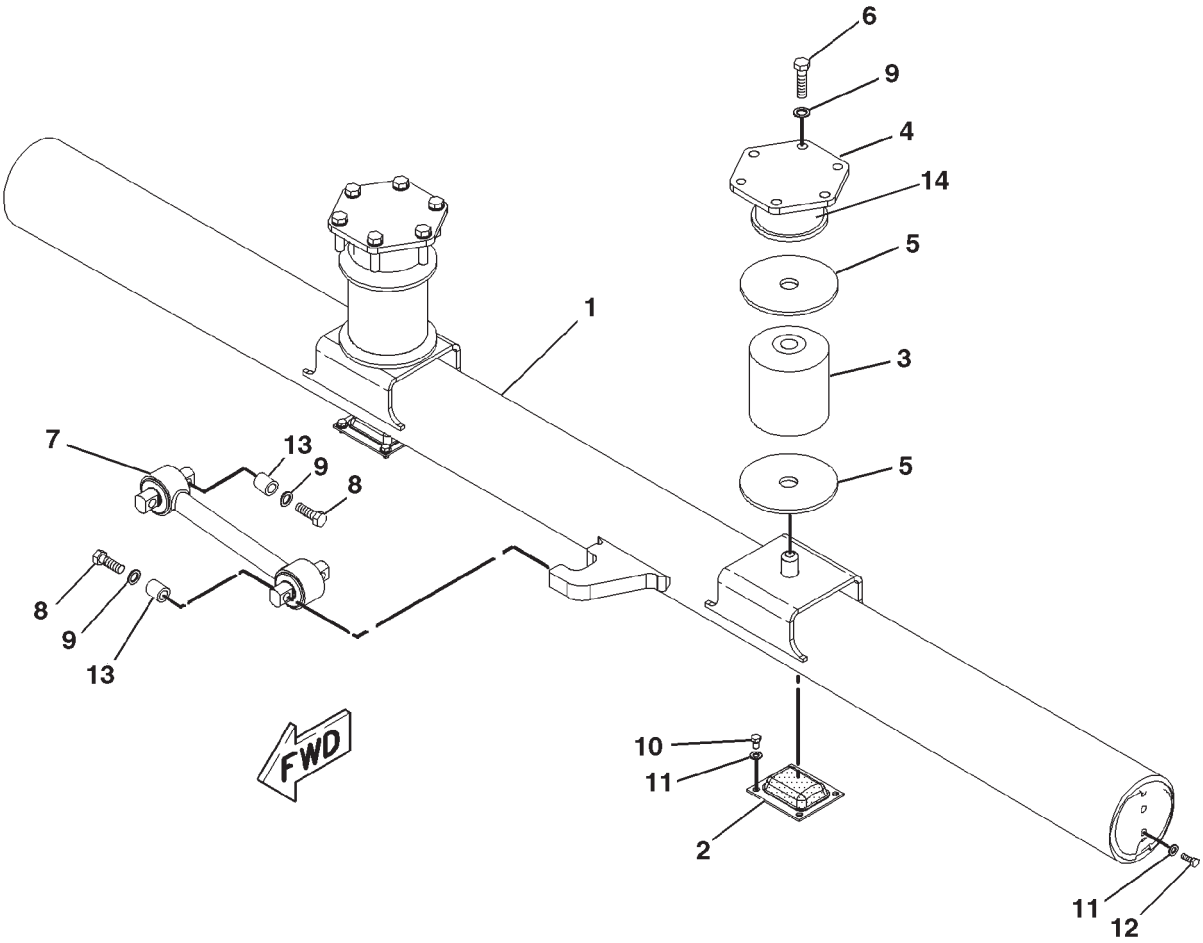

0850229A

SUPPORT GP-UNDERCARRIAGE - 163-1009

WIDE GAUGE

ITEM	NUMBER	QTY	DESCRIPTION
-	163-1009	--	SUPPORT GP-UNDERCARRIAGE [A] (NOT SERVICED)
1	162-0288	1	SUPPORT ASM
	CH7T-1099	2	LINK
2	163-0267	2	PAD ASM
3	163-0268	2	SPRING (RUBBER)
4	223-3273	2	PLATE
5	CH177-1872	4	PLATE
6	400008X1	12	BOLT-HEX HEAD (M20X2.5X80MM)
7	183-8600	1	ROD
8	400032X1	4	BOLT (M20X2.5X100MM)
9	400080X1	16	WASHER-PLATED (22X35X3.5)
10	400047X1	8	BOLT (M12X1.75X20MM)
11	400357X1	12	WASHER-HARD (M12X25.5X3)
12	400064X1	4	BOLT (M12X1.75X35MM)
13	CH213-1827	4	SPACER (22X35X40)
14	223-2480	2	SUPPORT

[A] PART OF
156-4881; 502325D1 UNDERCARRIAGE AR

0850229A
PR: t05i29k58b0308

SUPPORT GP-UNDERCARRIAGE - 177-9945

(2286-2600MM/90-102")
EAME ONLY

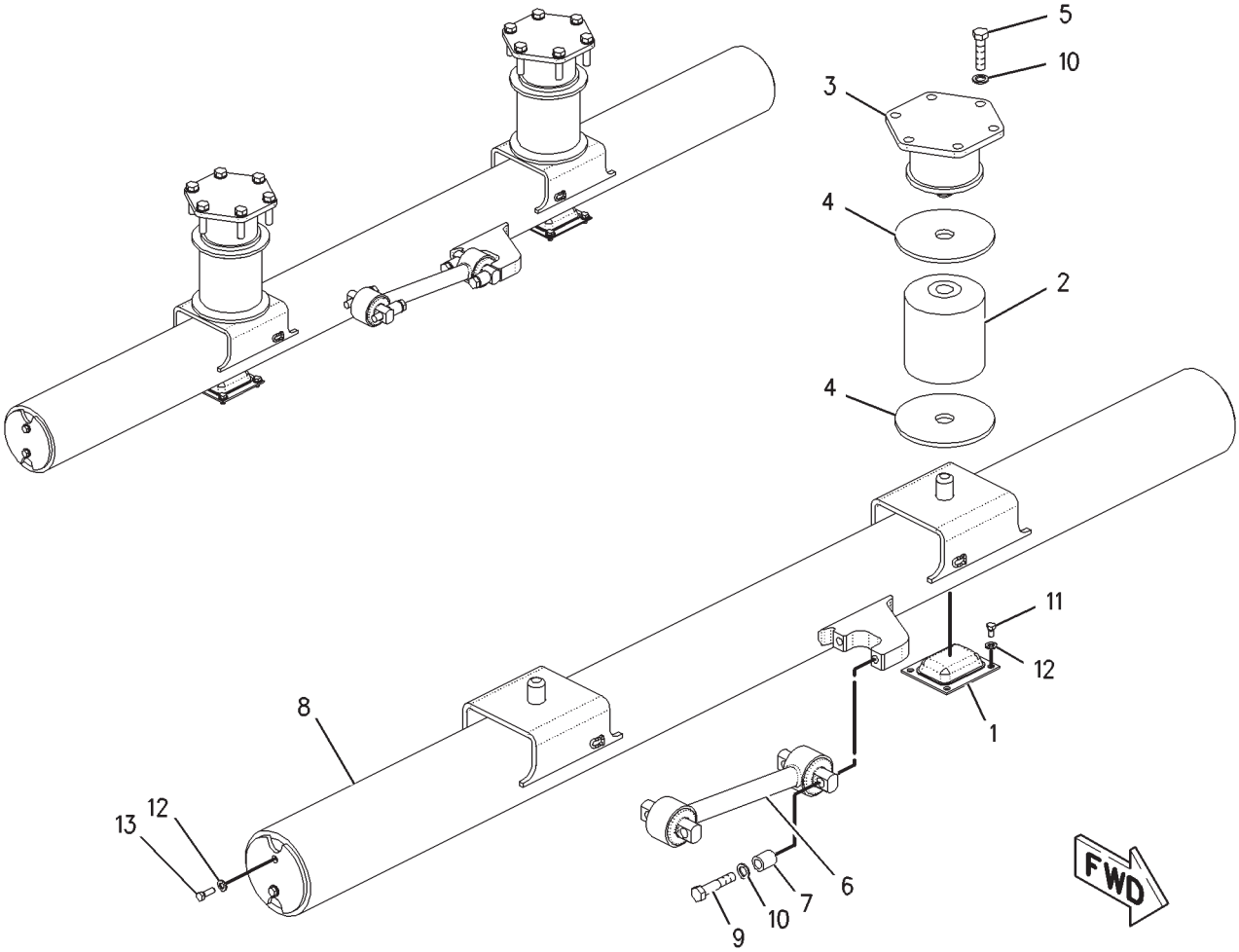

00853117

SUPPORT GP-UNDERCARRIAGE - 177-9945

(2286-2600MM/90-102")
EAME ONLY

ITEM	NUMBER	QTY	DESCRIPTION
-	177-9945	--	SUPPORT GP-UNDERCARRIAGE [A]
			(NOT SERVICED)
1	163-0267	2	PAD AS (SUPPORT)
2	163-0268	2	SPRING (RUBBER)
3	223-3273	2	PLATE
	223-2480	2	SUPPORT
4	CH177-1872	4	PLATE
5	400008X1	12	BOLT-HEX HEAD (M20X2.5X80MM)
6	183-8600	1	ROD
7	CH213-1827	4	SPACER (22X35X40MM THK)
8	172-4155	1	SUPPORT AS
	CH7T-1099	2	LINK
9	400032X1	4	BOLT (M20X2.5X100MM)
10	400080X1	16	WASHER-PLATED (22X35X3.5MM THK)
11	400047X1	8	BOLT (M12X1.75X20MM)
12	400357X1	12	WASHER-HARD (M12X25.5X3MM THK)
13	400064X1	4	BOLT (M12X1.75X35MM)

[A] PART OF 177-9946 UNDERCARRIAGE AR

00853117
PR: t05i29k58b0309

UNDERCARRIAGE AR - 156-4881
ROW

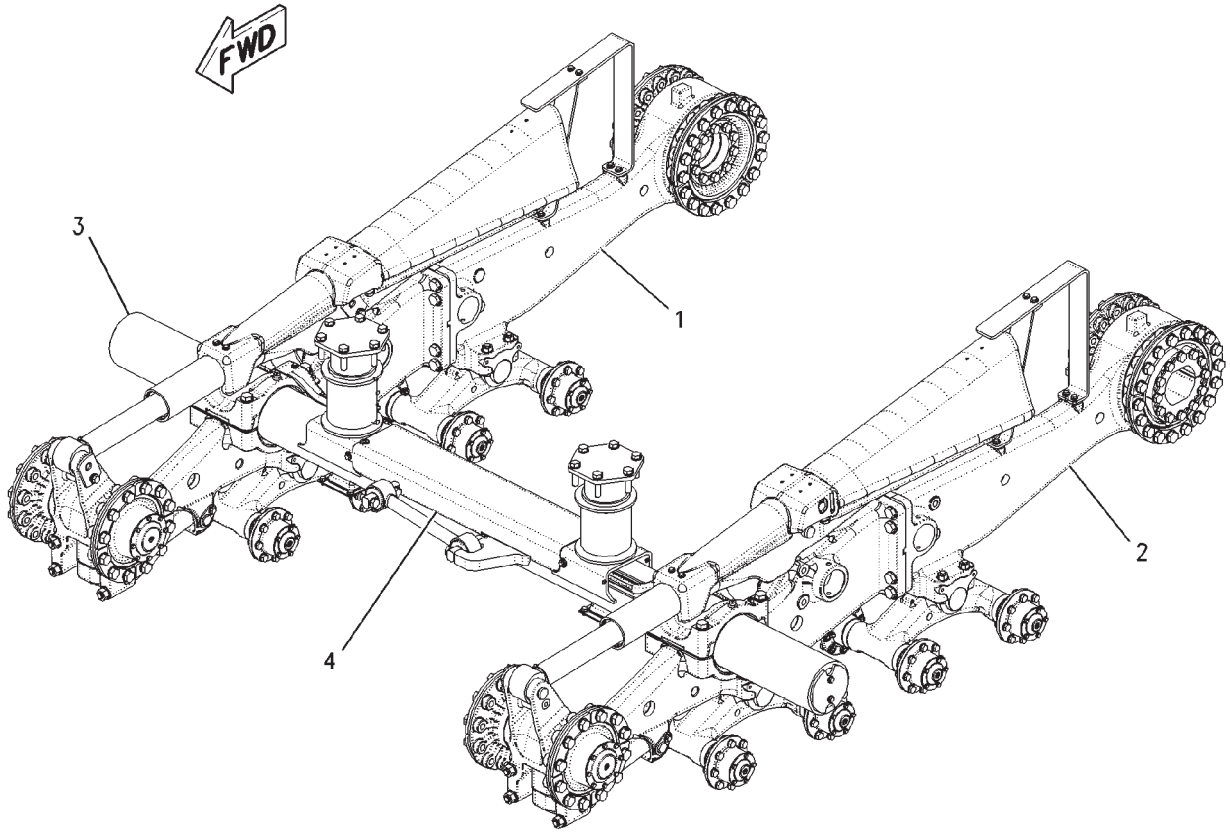

UNDERCARRIAGE AR - 156-4881

ROW

ITEM	NUMBER	QTY	DESCRIPTION
-	156-4881	--	UNDERCARRIAGE AR [A] (NOT SERVICED)
1	156-4882	1	FRAME AR (RH) (NOT SERVICED) (SEE BREAKDOWN FOR COMPONENTS)
2	156-4883	1	FRAME AR (LH) (NOT SERVICED) (SEE BREAKDOWN FOR COMPONENTS)
3	163-1009	1	SUPPORT GP-UNDERCARRIAGE (NOT SERVICED) (SEE BREAKDOWN FOR COMPONENTS)
4	201-9927	1	GUARD GP-LINES (NOT SERVICED) (SEE BREAKDOWN FOR COMPONENTS)

[A] PART OF 177-9948; 183-2198 GAUGE AR-TRACK

00850503
PR: t05i29k58b0310

UNDERCARRIAGE AR - 177-9946

EAME ONLY

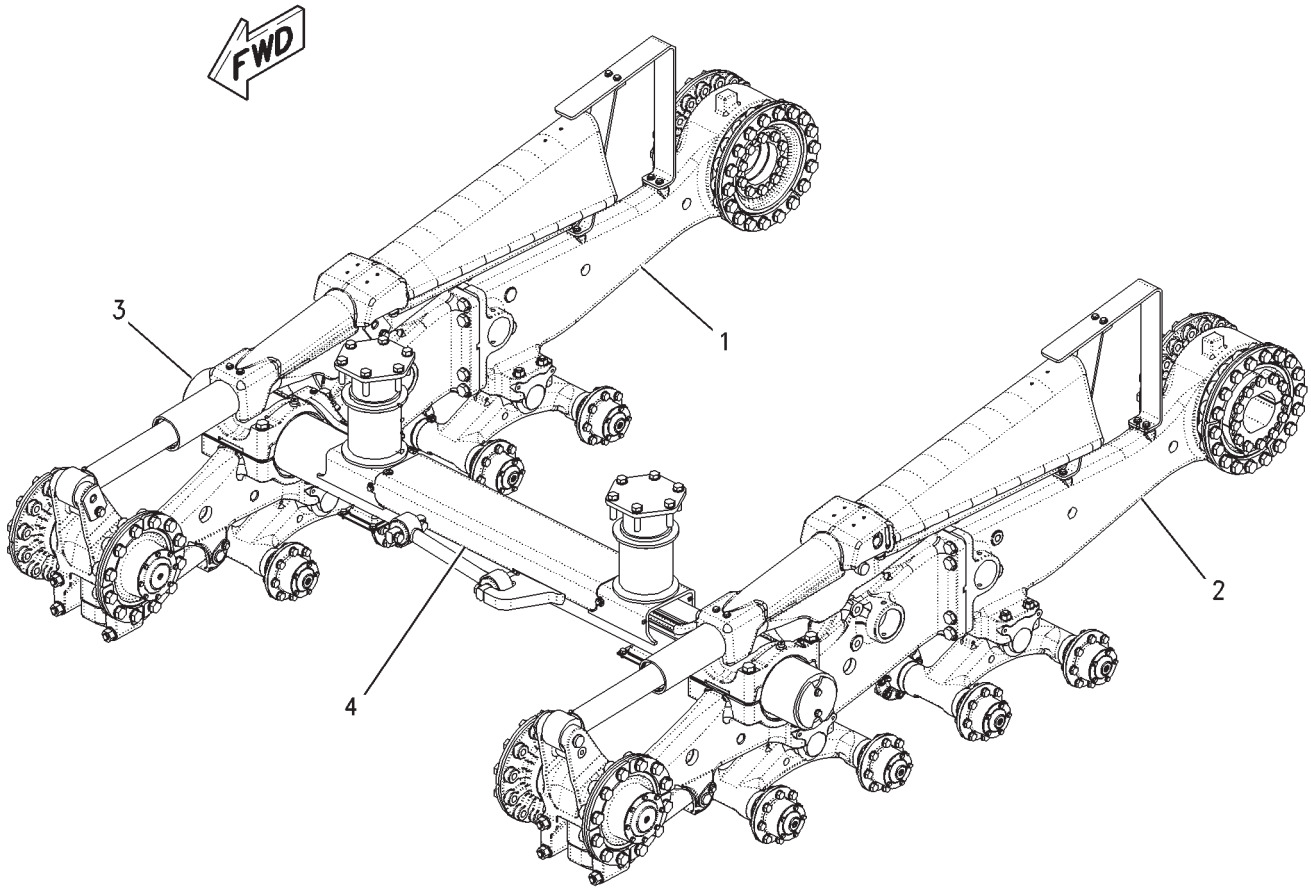

UNDERCARRIAGE AR - 177-9946

EAME ONLY

ITEM	NUMBER	QTY	DESCRIPTION
-	177-9946	--	UNDERCARRIAGE AR
1	156-4882	1	FRAME AR (RH) (NOT SERVICED) (SEE BREAKDOWN FOR COMPONENTS)
2	156-4883	1	FRAME AR (LH) (NOT SERVICED) (SEE BREAKDOWN FOR COMPONENTS)
3	177-9945	1	SUPPORT GP-UNDERCARRIAGE (NOT SERVICED) (SEE BREAKDOWN FOR COMPONENTS)
4	201-9928	1	GUARD GP-LINES (NOT SERVICED) (SEE BREAKDOWN FOR COMPONENTS)

[A] PART OF:
177-9947; 183-2197 GAUGE AR-TRACK

00851114
PR: t05i29k58b0311

RESTRAIN GP-ROLLERFRAME - 500040D1

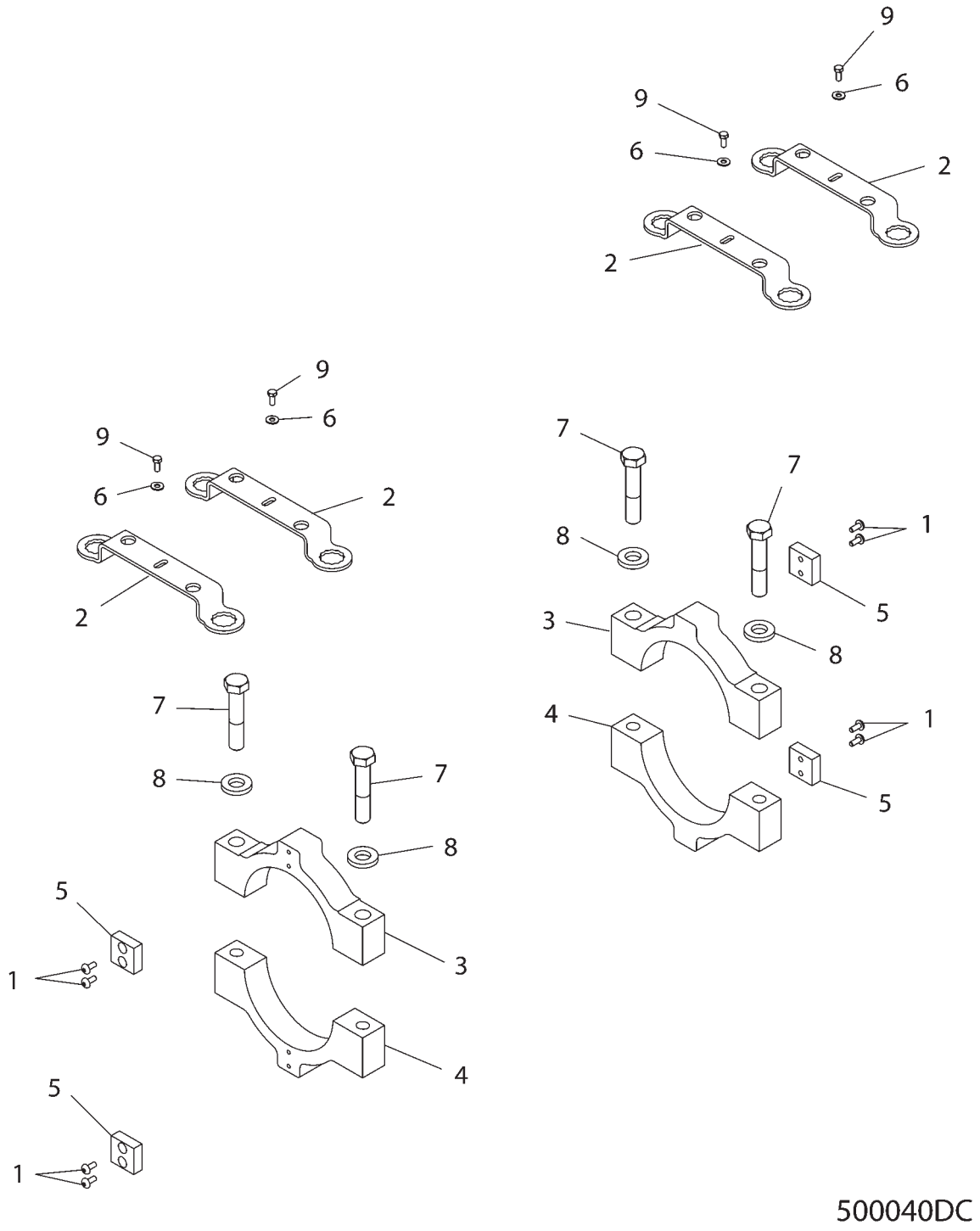

RESTRAIN GP-ROLLERFRAME - 500040D1

ITEM	NUMBER	QTY	DESCRIPTION
-	502769D1	--	RESTRAIN GP-ROLLERFRAME (FIELD INSTALL)
-	502768D1	--	RESTRAIN GP-ROLLERFRAME (FACTORY) (NOT SERVICED, ORDER FIELD INSTALLED)
-	500040D1	--	RESTRAIN GP-ROLLERFRAME [A] (NOT SERVICED, ORDER FIELD INSTALLED)
1	CH127-2170	8	SCREW-M8X1.25X20MM TRUSS HD
2	500081D1	4	BRACKET-LOCK
3	500468D1	2	CLAMP-TOP
4	500469D1	2	CLAMP-BOTTOM
5	500470D1	4	PAD-WEAR
6	400599X1	4	WASHER-HARD,M8X20.5ODX2THK
7	400213X1	4	BOLT-M24X3X120MM
8	CH8T-1482	4	WASHER-HARD (26IDX50ODX8MM)
9	400053X1	4	BOLT-M8X1.25X20

[A] PART OF 502768D1;502769D1 RESTAIN GP

500040DC
PR: t05i29k58b0312

WHEEL AR-DRIVER - 220-2357

112 MM (4.4 IN)
ROW & EAME

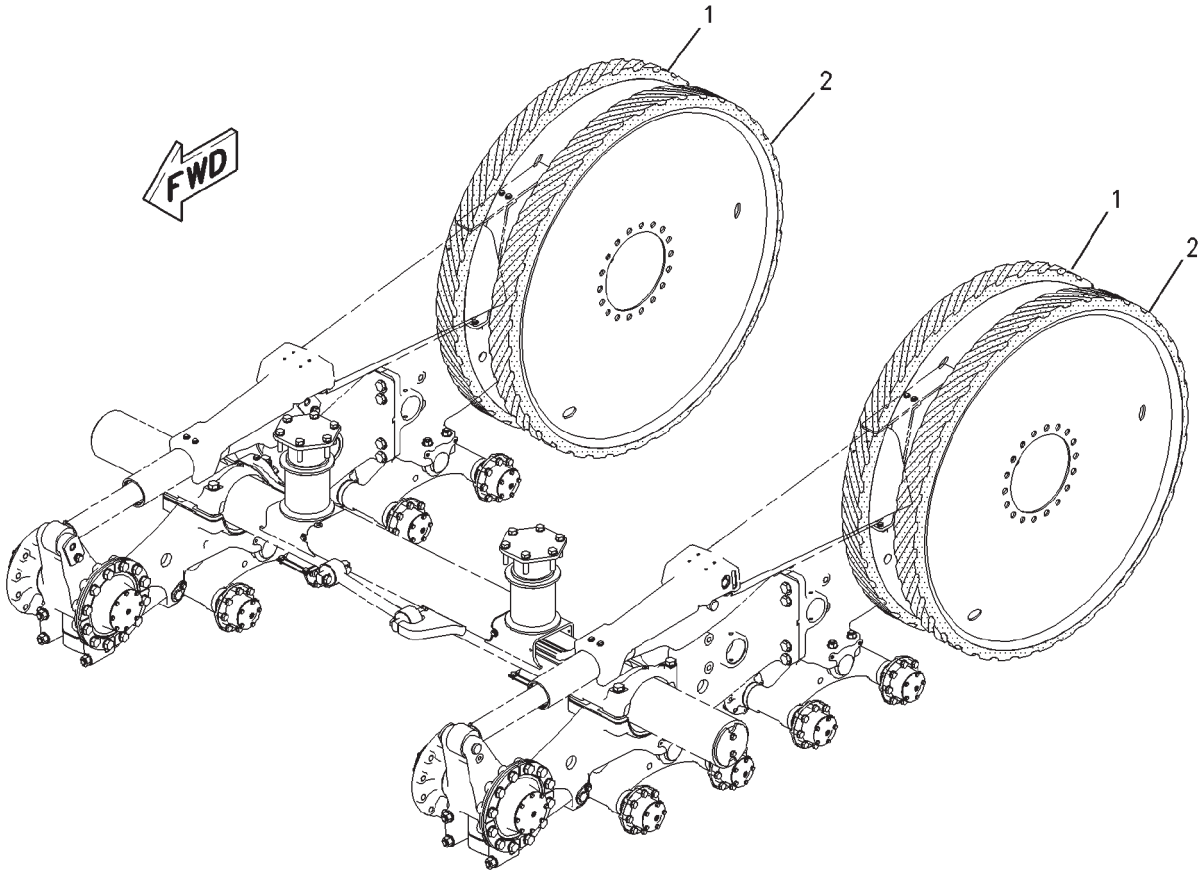

00889595

WHEEL AR-DRIVER - 220-2357

112 MM (4.4 IN)
ROW & EAME

ITEM	NUMBER	QTY	DESCRIPTION
-	220-2357	--	WHEEL AR-DRIVER (NOT SERVICED)
1	1R-1234	2	WHEEL ASM
2	1R-1249	2	WHEEL ASM
-	502158D1	--	KIT-WHEEL AR-DRIVER (FIELD INSTALLED) (INCLUDES 1 EA OF ITEM 1 & 2)

00889595
PR: t05i29k58b0313

WHEEL AR-DRIVER - 220-2358

WIDE
196 MM (7.7 IN)

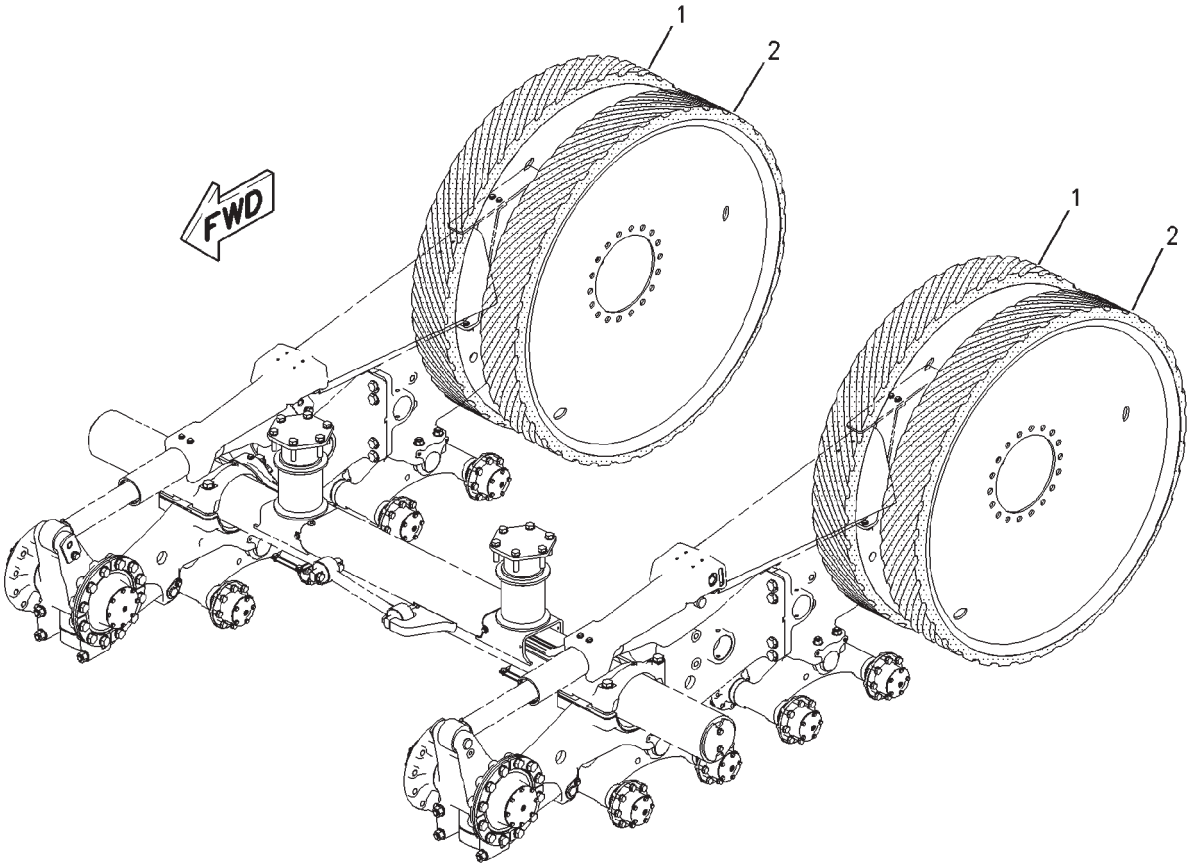

00889641

WHEEL AR-DRIVER - 220-2358

WIDE
196 MM (7.7 IN)

ITEM	NUMBER	QTY	DESCRIPTION
-	220-2358	--	WHEEL AR-DRIVER [A] (NOT SERVICED)
-	502788D1	--	KIT-WHEEL AR-DRIVER (FIELD INSTALLED)
-	502913D1	--	WHEEL AR-DRIVER (EAME/ROW)(NOT SERVICED)
1	1R-1235	2	WHEEL ASM
2	1R-1250	2	WHEEL ASM
-	502161D1	--	KIT-WHEEL AR-DRIVER (FIELD INSTALLED) (INCLUDES 1 EA OF ITEM 1 & 2)

[A] PART OF 500033D1;500034D1;500035D1;
500037D1 BASE UNIT AR;
502788D1 WHEEL AR-DRIVER;
502913D1 WHEEL AR-DRIVER

00889641
PR: t05i29k58b0314

WHEEL AR-IDLER - 220-2355
105 MM (4.1 IN)

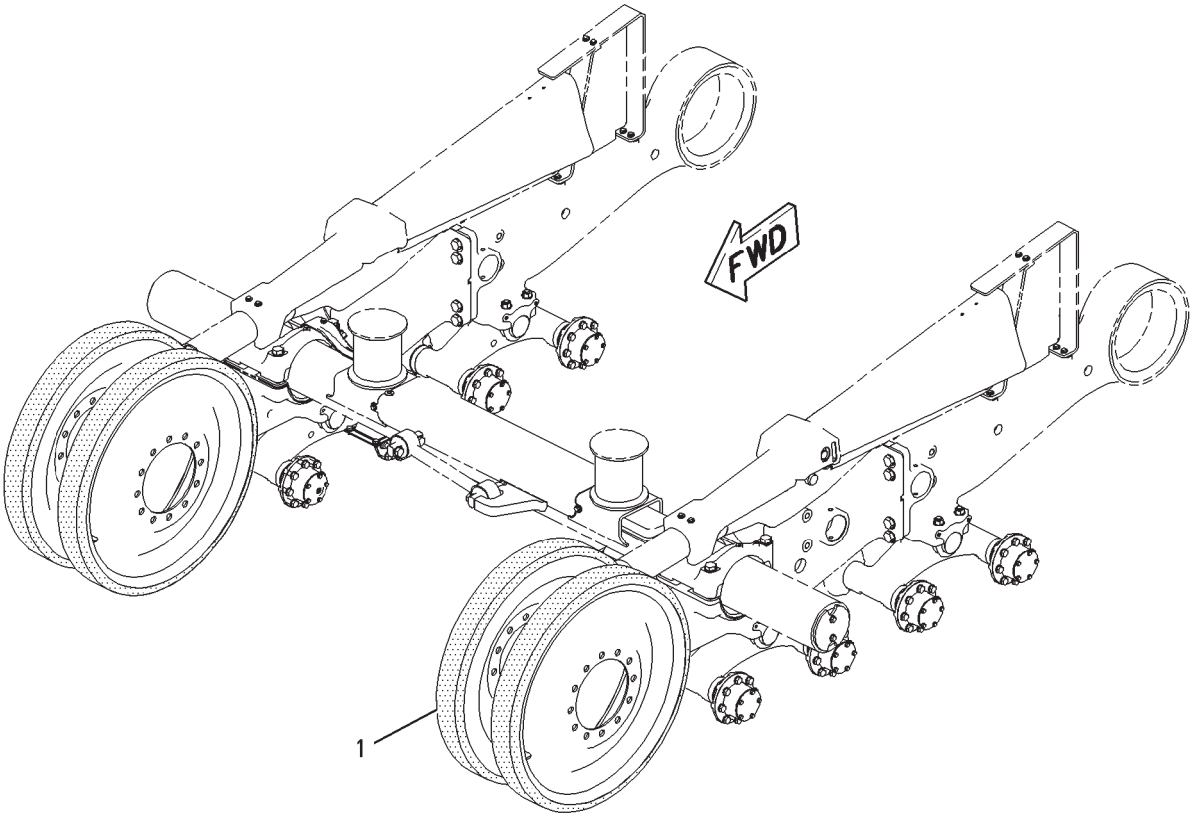

00889409

WHEEL AR-IDLER - 220-2355

105 MM (4.1 IN)

ITEM	NUMBER	QTY	DESCRIPTION
-	220-2355	--	WHEEL AR-IDLER (NOT SERVICED)
1	500062D1	4	WHEEL ASM-IDLER
-	502160D1	--	WHEEL AR-IDLER (KIT) (INCLS 2 OF ITEM 1)

00889409
PR: t05i29k58b0315

WHEEL AR-IDLER - 220-2356
192 MM (7.6 IN)

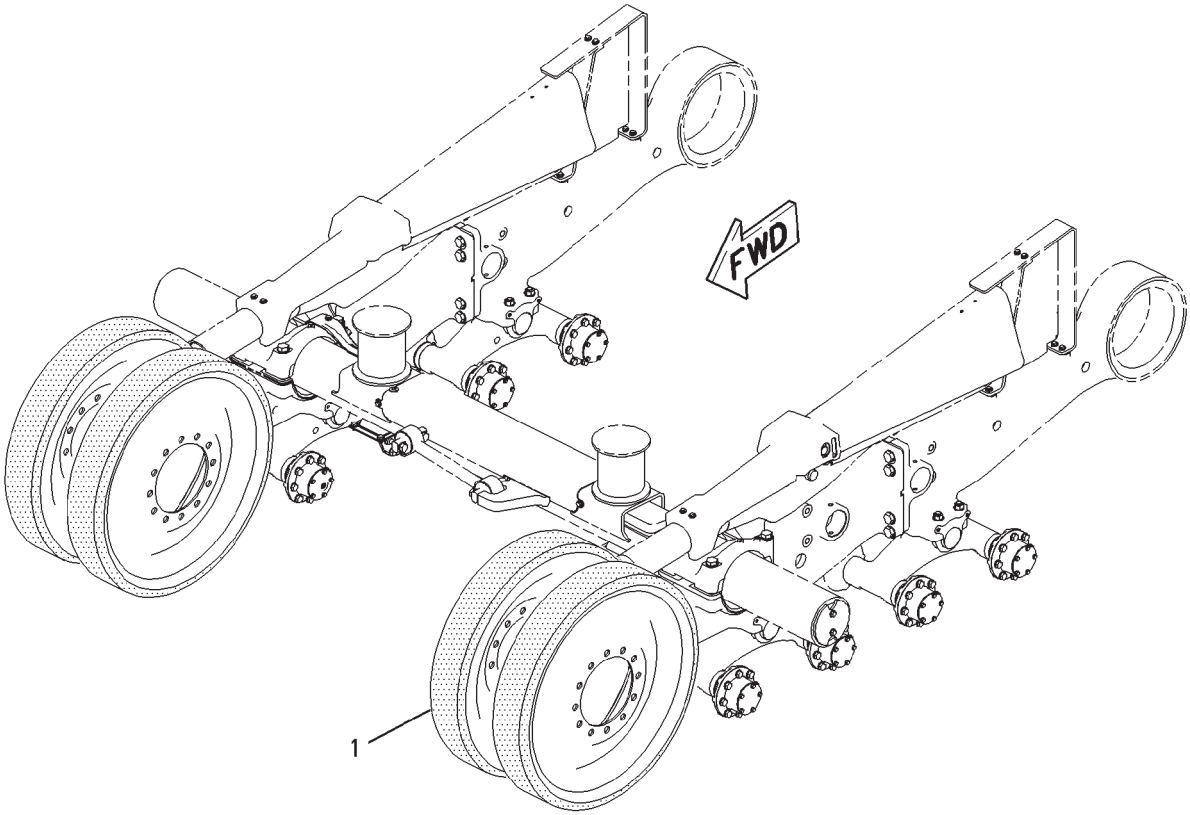

WHEEL AR-IDLER - 220-2356

192 MM (7.6 IN)

ITEM	NUMBER	QTY	DESCRIPTION
-	502787D1	--	WHEEL AR-IDLER (FIELD INSTALLED)
-	502915D1	--	WHEEL AR-IDLER (FACT) (NOT SERVICED, ORDER FIELD INSTALLED)
-	220-2356	--	WHEEL AR-IDLER (REF ONLY-NOT SERVICED, ORDER FIELD INSTALLED)
1	1R-1238	4	WHEEL ASM-IDLER
-	502163D1	--	WHEEL AR-IDLER (KIT) (INCLS 2 OF ITEM 1)

00889550
PR: t05i29k58b0316

WEDGE GP-WHEEL - 189-8931

EAME ONLY

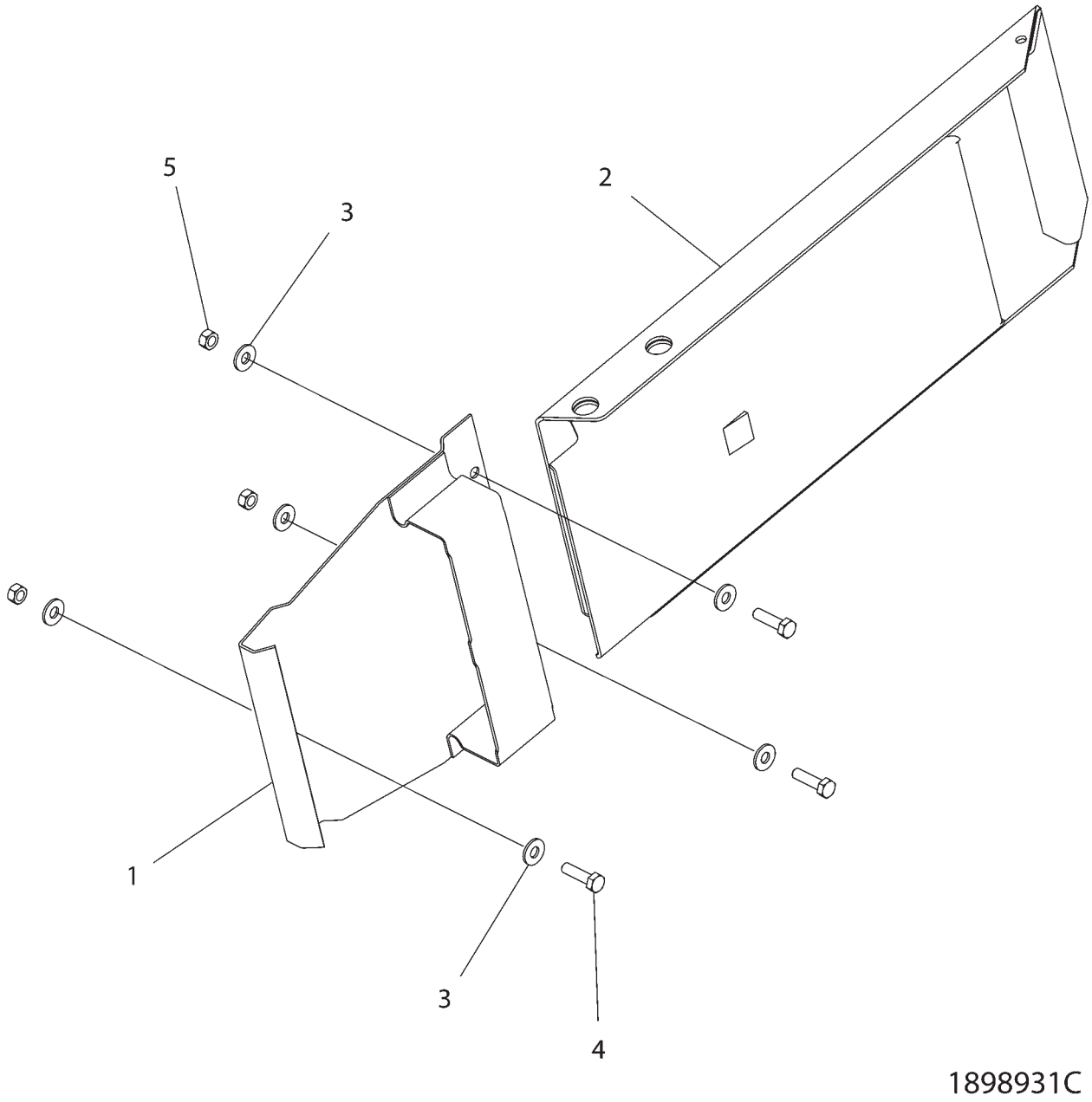

WEDGE GP-WHEEL - 189-8931

EAME ONLY

ITEM	NUMBER	QTY	DESCRIPTION
1	CH151-6030	1	BRACKET AS.
2	151-4059	1	WHEEL BLOCK
3	400599X1	6	WASHER-HARD,M8X20.5ODX2THK
4	400245X1	3	BOLT-M8X1.25X30 ZNDI HHD 10.9
5	400340X1	3	NUT-M8X1.25X13 HEX ZND1

1898931C
PR: t05i29k58b0317

BRAKE AR - 185-8860
AIR TRAILER (WITHOUT HITCH)
MT835 & MT845
EAME ONLY

NO ILLUSTRATION

NOTIF

BRAKE AR - 185-8860

AIR TRAILER (WITHOUT HITCH)
MT835 & MT845
EAME ONLY

ITEM	NUMBER	QTY	DESCRIPTION
-	185-8860	--	BRAKE AR-W/O HITCH (SERVICED BY GROUPS)
1	180-2937	1	AIR COMPRESSOR GP (NOT SERVICED) (SEE BREAKDOWN FOR COMPONENTS)
2	190-0435	1	TANK & LINES GP-AIR (NOT SERVICED) (SEE BREAKDOWN FOR COMPONENTS)
3	190-0436	1	LINES GP-CONTROL (KIT) (SEE BREAKDOWN FOR COMPONENTS)
4	190-0438	1	LINES GP-COUPLER (NOT SERVICED) (SEE BREAKDOWN FOR COMPONENTS)

NOTIF
PR: t05i29k58b0318

BRAKE AR - 186-1620
AIR TRAILER (WITHOUT HITCH)
EAME ONLY

NO ILLUSTRATION

NOTIF

BRAKE AR - 186-1620
AIR TRAILER (WITHOUT HITCH)
EAME ONLY

ITEM	NUMBER	QTY	DESCRIPTION
-	186-1620	--	BRAKE AR-W/O HITCH
1	500970D1	1	AIR COMPRESSOR GP (NOT SERVICED) (SEE BREAKDOWN FOR COMPONENTS)
2	190-0435	1	TANK & LINES GP-AIR (NOT SERVICED) (SEE BREAKDOWN FOR COMPONENTS)
3	190-0436	1	LINES GP-CONTROL (KIT) (SEE BREAKDOWN FOR COMPONENTS)
4	190-0438	1	LINES GP-COUPLER (NOT SERVICED) (SEE BREAKDOWN FOR COMPONENTS)

NOTIF
PR: t05i29k58b0319

BRAKE AR-AIR - 192-6400
WITH HITCH
MT835 & MT845
EAME ONLY

NO ILLUSTRATION

NOTIF

BRAKE AR-AIR - 192-6400

WITH HITCH
MT835 & MT845
EAME ONLY

ITEM	NUMBER	QTY	DESCRIPTION
-	192-6400	--	BRAKE AR-AIR (NOT SERVICED)
1	180-2937	1	AIR COMPRESSOR GP (NOT SERVICED) (SEE BREAKDOWN FOR COMPONENTS)
2	200-4310	--	LINES & CONTROL GP (KIT) (SEE BREAKDOWN FOR COMPONENTS)
3	190-0438	1	LINES GP-COUPLER (NOT SERVICED) (SEE BREAKDOWN FOR COMPONENTS)
4	190-0435	1	TANK & LINES GP-AIR (NOT SERVICED) (SEE BREAKDOWN FOR COMPONENTS)

NOTIF
PR: t05i29k58b0320

BRAKE AR - 192-6390
AIR TRAILER (WITH HITCH)
MT855 & MT865

NO ILLUSTRATION

NOTIF

BRAKE AR - 192-6390
AIR TRAILER (WITH HITCH)
MT855 & MT865

ITEM	NUMBER	QTY	DESCRIPTION
-	192-6390	--	BRAKE AR-AIR TRAILER
1	500970D1	1	AIR COMPRESSOR GP (NOT SERVICED) (SEE BREAKDOWN FOR COMPONENTS)
2	200-4310	--	LINES & CONTROL GP (KIT) (SEE BREAKDOWN FOR COMPONENTS)
3	190-0435	1	TANK & LINES GP-AIR (NOT SERVICED) (SEE BREAKDOWN FOR COMPONENTS)
4	190-0438	1	LINES GP-COUPLER (NOT SERVICED) (SEE BREAKDOWN FOR COMPONENTS)

NOTIF
PR: t05i29k58b0321

KIT-HYD TRAILER BRAKE - 209-3688

WITHOUT 3 POINT HITCH
EAME ONLY

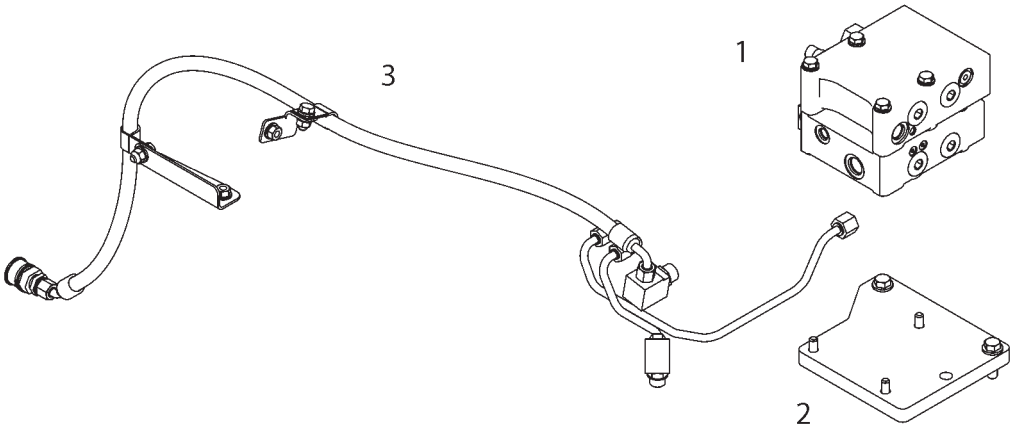

2093688C

KIT-HYD TRAILER BRAKE - 209-3688

WITHOUT 3 POINT HITCH
EAME ONLY

ITEM	NUMBER	QTY	DESCRIPTION
-	209-3688	--	KIT-HYD TRAILER BRAKE
	193-8199	1	VALVE AR (NOT SERVICED)
			(INCLUDES ITEMS 1-3)
			(SEE BREAKDOWN FOR COMPONENTS)

2093688C
PR: t05i29k58b0322

KIT-HYD BRAKE - 501140D1
WITHOUT 3 POINT HITCH
SPECIAL APPLICATIONS

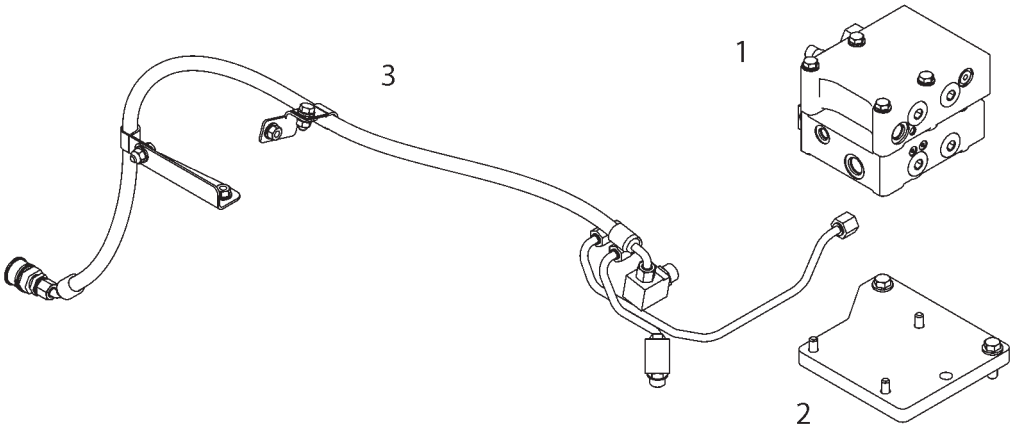

2093688C

KIT-HYD BRAKE - 501140D1

WITHOUT 3 POINT HITCH
SPECIAL APPLICATIONS

ITEM	NUMBER	QTY	DESCRIPTION
-	501140D1	--	KIT-HYD BRAKE (FIELD INSTALLED)
1	192-4816	1	VALVE GP-BANK 2 (SEE BREAKDOWN FOR COMPONENTS)
2	162-9805	1	MOUNTING GP-VALVE (NOT SERVICED) (SEE BREAKDOWN FOR COMPONENTS)
3	501130D1	1	LINES GP-HYDRAULIC OIL (NOT SERVICED) (SEE BREAKDOWN FOR COMPONENTS)

2093688C
PR: t05i29k58b0323

KIT HYDR TRAILER BRAKE - 209-3689

WITH 3 POINT HITCH
EAME ONLY

NO ILLUSTRATION

NOTIF

KIT HYDR TRAILER BRAKE - 209-3689

WITH 3 POINT HITCH
EAME ONLY

ITEM	NUMBER	QTY	DESCRIPTION
-	209-3689	--	BRAKE AR-TRAILER (SERVICED BY GROUPS)
1	CH7X-0474	4	BOLT (M10X1.5X220MM)
2	400287X1	4	WASHER-HARD (11X21X2.5)
3	162-9805	1	MOUNTING GP-VALVE (NOT SERVICED) (SEE BREAKDOWN FOR COMPONENTS)
4	193-1558	1	LINES GP-HYDRAULIC (NOT SERVICED) (SEE BREAKDOWN FOR COMPONENTS)
5	196-2318	1	VALVE GP-BRAKE CONTROL (SEE BREAKDOWN FOR COMPONENTS)
6	209-5021	1	VALVE GP-CONTROL (PRIORITY) (SEE BREAKDOWN FOR COMPONENTS)
7	CH5P-9186	8	SEAL-O-RING [J]
8	CH8L-2777	7	SEAL-O-RING [J]

[J] QUANTITIES SHOWN REFLECT REPLACEMENT SEALS FOR THE VALVE SECTION IMMEDIATELY BELOW THE TOP PLATE AND DUPLICATE SEALS FOR THOSE PRESENT IN THE ADDITIONAL VALVE GP

NOTIF
PR: t05i29k58b0324

BRAKE GP-PARKING - 210-7510

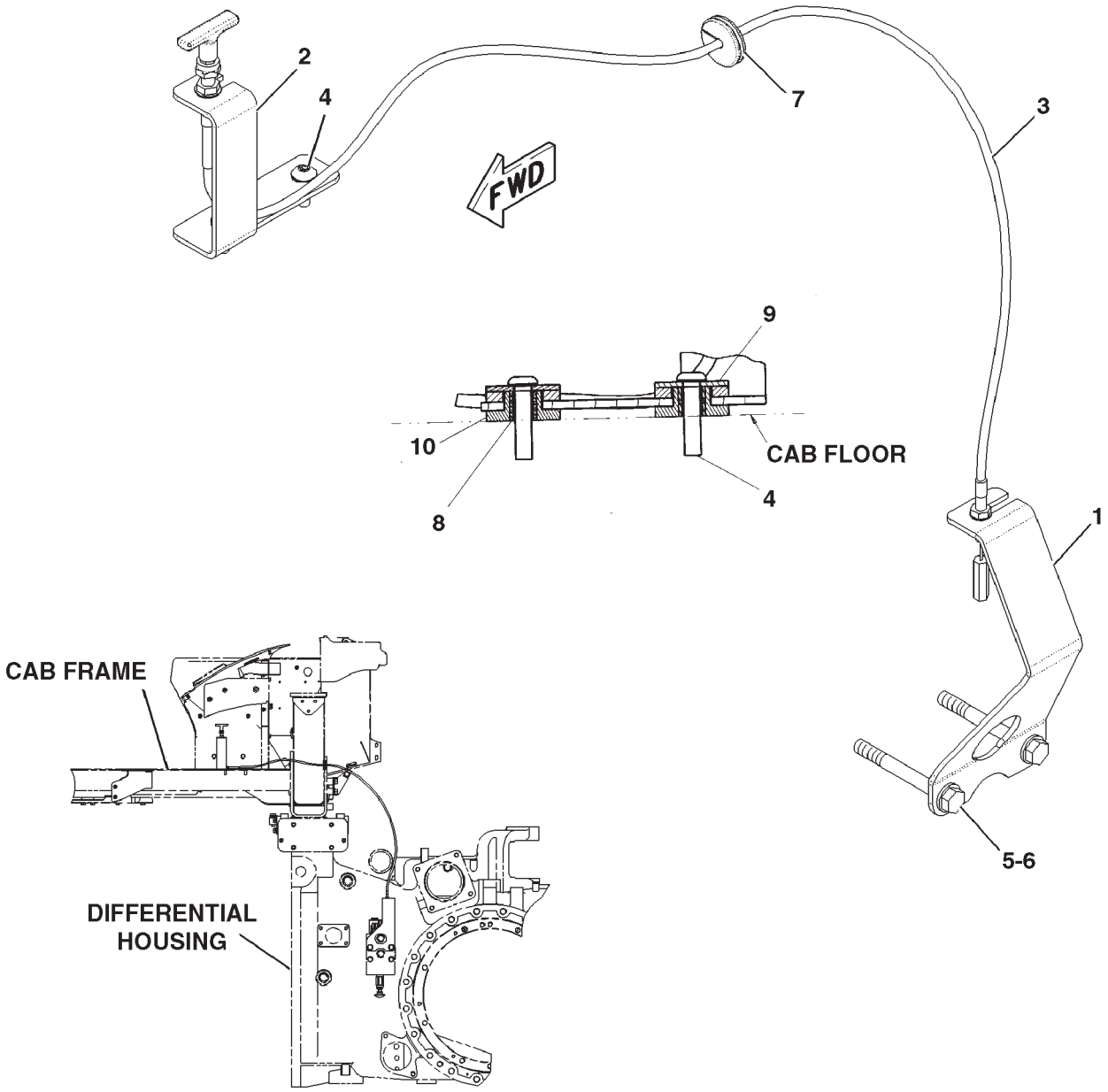

LEFT SIDE VIEW

BRAKE GP-PARKING - 210-7510

ITEM	NUMBER	QTY	DESCRIPTION
-	210-7510	--	BRAKE GP-PARKING [A] (NOT SERVICED)
1	192-6383	1	BRACKET
2	210-7483	1	BRACKET
3	210-7511	1	CABLE (PARKING BRAKE)
4	CH142-2304	2	SCREW (M8 X 1.25)
5	400287X1	2	WASHER-HARD (11X21X2.5)
6	400225X1	2	BOLT (M10X1.5X90MM)
7	400114X1	1	GROMMET (30ODX7IDX3LG)
8	CH226-2711	2	SPACER
9	CH156-0283	2	WASHER-HARD
10	CH226-0372	2	MOUNT

[A] PART OF 179-1952 BASE AR-COMMON

0893359B
PR: t05i29k58b0325

CONTROL GP-PARKING BRAKE - 172-6857

EAME ONLY

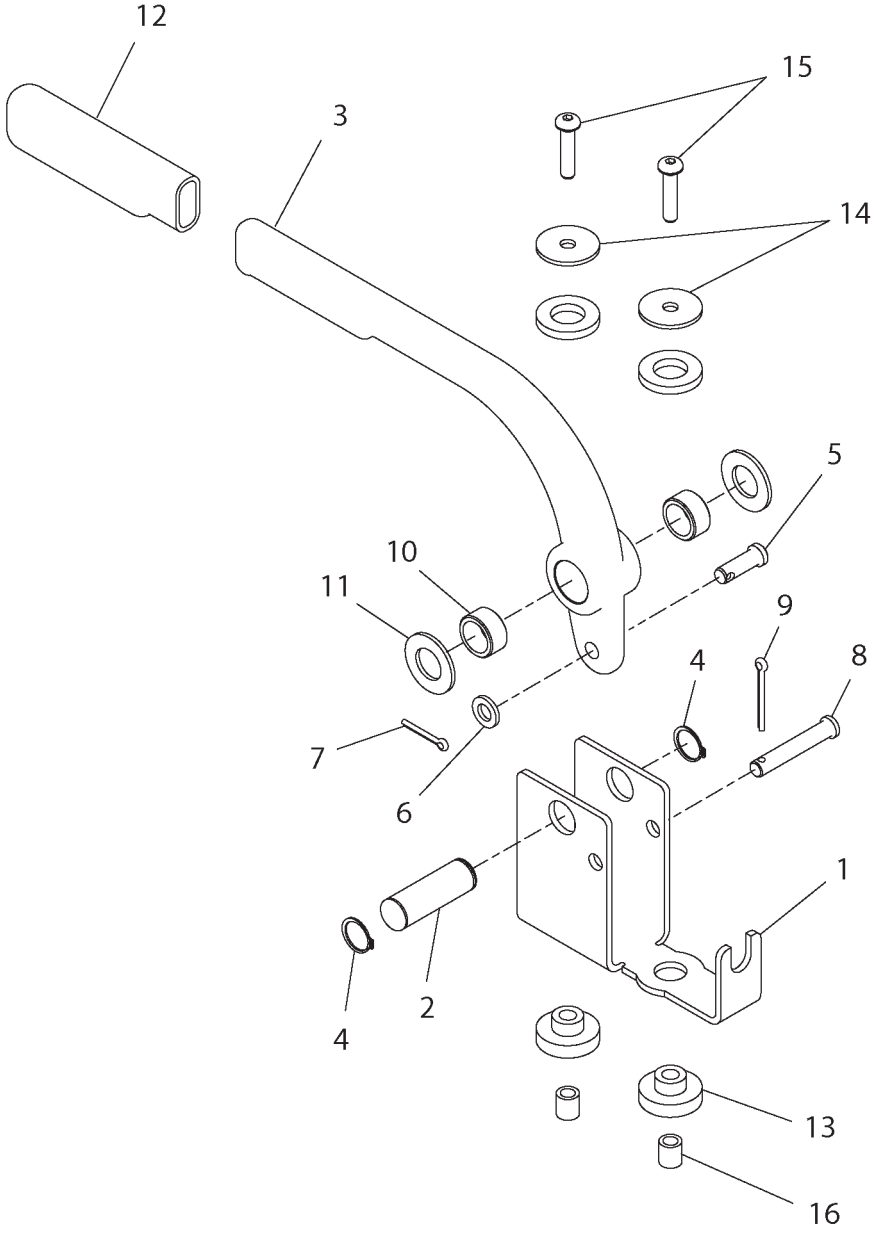

1726857F

CONTROL GP-PARKING BRAKE - 172-6857

EAME ONLY

ITEM	NUMBER	QTY	DESCRIPTION
-	172-6857	--	CONTROL GP-PARK BRAKE [A] (NOT SERVICED)
1	179-6897	1	BRACKET
2	CH179-6898	1	PIN
3	179-6901	1	HANDLE
4	CH2J-6356	2	RING-RETAINING
5	CH9H-6673	1	PIN
6	CH5M-2894	1	WASHER-HARD (10.2X18.5X2.5MM THK)
7	CH3B-4617	1	PIN-COTTER
8	CH6L-3966	1	PIN
9	CH5J-3079	1	PIN-COTTER
10	CH4E-1251	2	BEARING-SLEEVE
11	CH114-5786	2	WASHER-NYLON (19.5X36.2X2.5MM THK)
12	179-6899	1	COVER
13	CH226-0372	2	BUSHING MOUNT (34.9ODX9.5ID
14	CH156-0283	2	WASHER-HARD (8.4X35X2.5MM THK)
15	CH142-2304	2	BOLT-BTN HD (M8X1.25X35MM)
16	CH226-2711	2	SPACER (12.7IDX8.2ODX14)

[A] PART OF 500841D1; 500842D1 CAB AR

1726857F
PR: t05i29k58b0326

CONTROL GP-PARKING BRAKE - 192-6360

SECONDARY
EAME ONLY

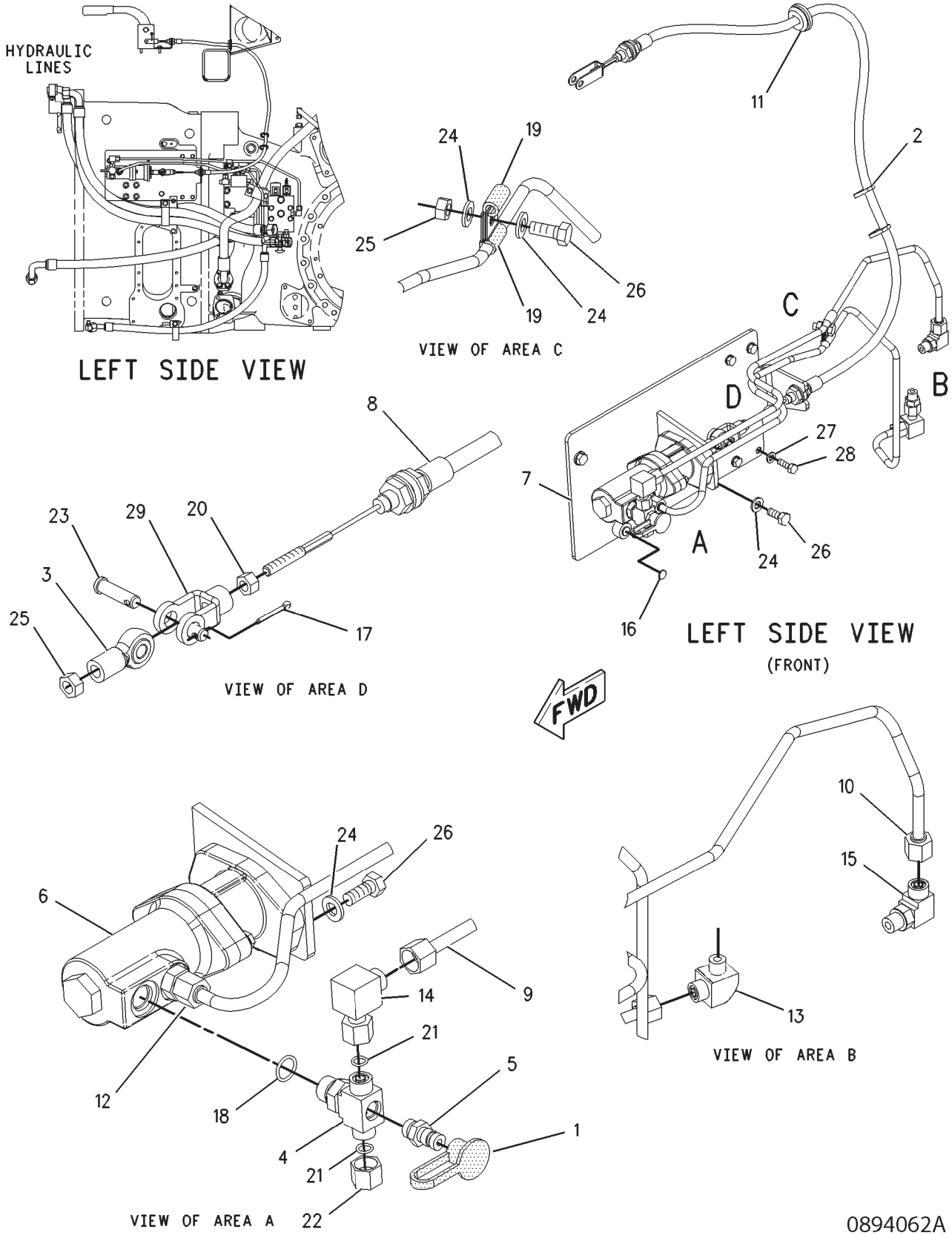

0894062A

CONTROL GP-PARKING BRAKE - 192-6360

SECONDARY
EAME ONLY

ITEM	NUMBER	QTY	DESCRIPTION
-	192-6360	--	CONTROL GP-PARKING BRAKE
1	400323X1	1	CAP-DUST
2	CH7K-1181	2	STRAP-CABLE
3	CH8T-6431	1	ROD END
4	CH163-6018	1	TEE
5	400324X1	1	FITTING AS
	400318X1	1	SEAL-O-RING (11.89IDX1.98DIA)
	6V-3965	1	FITTING AS
6	192-6371	1	VALVE AS-BRAKE [J]
7	200-4317	1	BRACKET AS
8	200-4323	1	CABLE AS
9	200-4392	1	TUBE AS
10	200-4372	1	TUBE AS
11	CH212-4443	1	GROMMET
12	400628X1	1	CONNECTOR AS
	3K-0360	1	SEAL-O-RING
	400378X1	1	SEAL-O-RING (12.83ODX1.78DIA)
	6V-8634	1	CONNECTOR
13	CH148-8374	1	ELBOW AS-90DEG 6ORFS X 8STOR
	CH3K-0360	1	SEAL-O-RING (16.36IDX2.21DIA)
	400378X1	1	SEAL-O-RING (12.83ODX1.78DIA)
14	CH148-8367	1	ELBOW AS-90DEG 6ORFS X 6ORFS SWVL
	400378X1	1	SEAL-O-RING (12.83ODX1.78DIA)
15	CH148-8378	1	ELBOW AS-90 DEG 4 STOR X6 ORFS
	400318X1	1	SEAL-O-RING (11.89IDX1.98DIA)
	400378X1	1	SEAL-O-RING (12.83ODX1.78DIA)
16	CH193-5914	4	PLUG
17	CH3B-4617	1	PIN-COTTER
18	CH3K-0360	1	SEAL-O-RING
19	400620X1	2	CLIP
20	CH6V-8183	1	NUT-FULL (3/8-24 THD)
21	400378X1	2	SEAL-O-RING (12.83ODX1.78DIA)
22	CH6V-9829	1	CAP AS
23	CH7X-0795	1	PIN
24	400287X1	6	WASHER-HARD (11X21X2.5MM THK)
25	WR522218	2	NUT (M10X1.5 THD)
26	400039X1	5	BOLT (M10X1.5X25MM)
27	400339X1	4	WASHER-HARD (8.8X16X2MM THK)
28	400341X1	4	BOLT (M8X1.25X25MM)
29	CH8X-6167	1	ROD END
	200-4341	1	KIT-REPAIR (VALVE AS-BRAKE) [J]

[A] PART OF 179-2180 BASE COMMON AR
[J] REPAIR KIT(S) MARKED J AVAILABLE
FOR PART(S) MARKED J

0894062A
PR: t05i29k58b0327

CONTROL GP-PARKING BRAKE - 192-6350

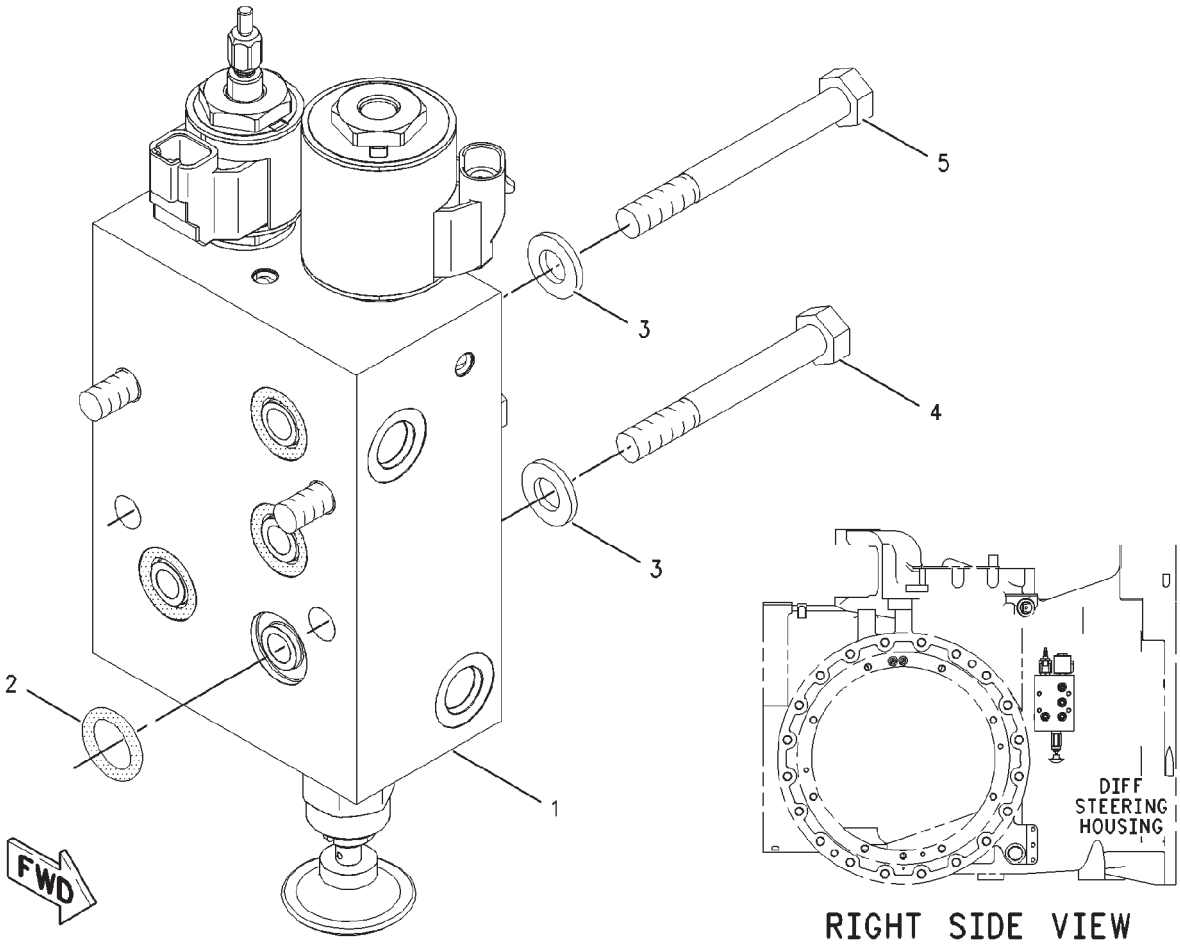

00856740

CONTROL GP-PARKING BRAKE - 192-6350

ITEM	NUMBER	QTY	DESCRIPTION
-	192-6350	--	CONTROL GP-PARKING BRAKE [A] (NOT SERVICED)
1	200-4351	1	VALVE GP-PARKING BRAKE (SEE BREAKDOWN FOR COMPONENTS)
2	CH5P-8119	4	SEAL-O-RING
3	400287X1	4	WASHER-HARD (11X21X2.5)
4	400044X1	3	BOLT (M10X1.50X80MM)
5	400225X1	1	BOLT (M10X1.5X90MM)

[A] PART OF:
179-1952; 179-2180 BASE COMMON AR

00856740
PR: t05i29k58b0328

CONTROL GP-SERVICE BRAKE - 200-4400

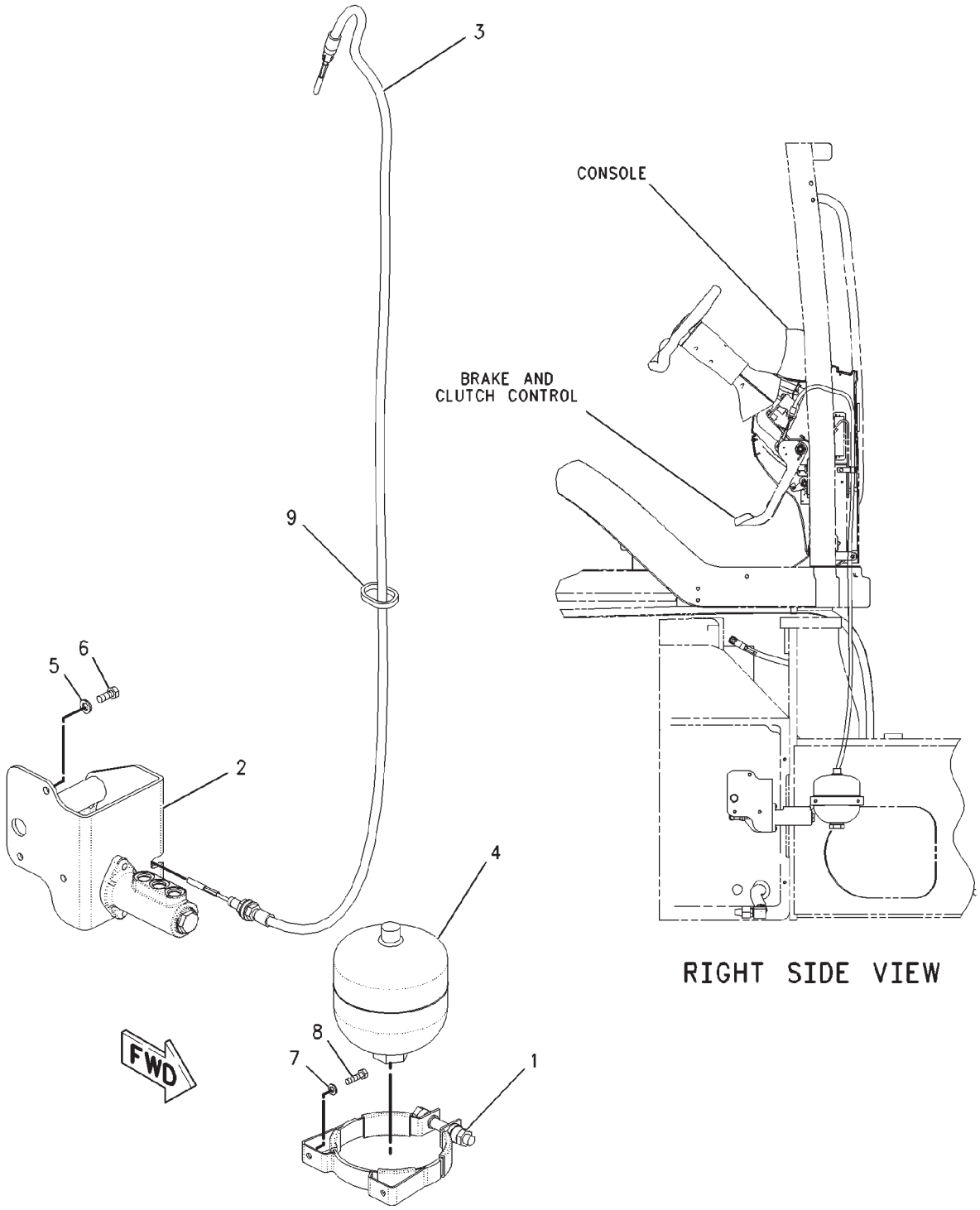

00888809

CONTROL GP-SERVICE BRAKE - 200-4400

ITEM	NUMBER	QTY	DESCRIPTION
-	200-4400	--	CONTROL GP-SERVICE BRAKE [A]
			(NOT SERVICED)
1	CH180-1120	1	CLAMP
2	184-5338	1	CYLINDER GP-MASTER
			(SEE BREAKDOWN FOR COMPONENTS)
3	500447D1	1	CABLE (SERVICE BRAKE)
4	200-4335	1	ACCUMULATOR ASM-BRAKE
	502105D1	1	TAG-CYLINDER
	208-7843	1	FILM-ACCUMULATOR
5	400287X1	3	WASHER-HARD (11X21X2.5)
6	400039X1	3	BOLT (M10X1.5X25MM)
7	400339X1	2	WASHER-HARD (8.8X16X2)
8	400245X1	2	BOLT (M8X1.25X30MM)
9	CH7K-1181	1	STRAP-CABLE

[A] PART OF:
179-1952; 179-2180 BASE AR-COMMON

00888809
PR: t05i29k58b0329

LINES GP-SERV BRAKE (B) - 185-8787

EAME ONLY

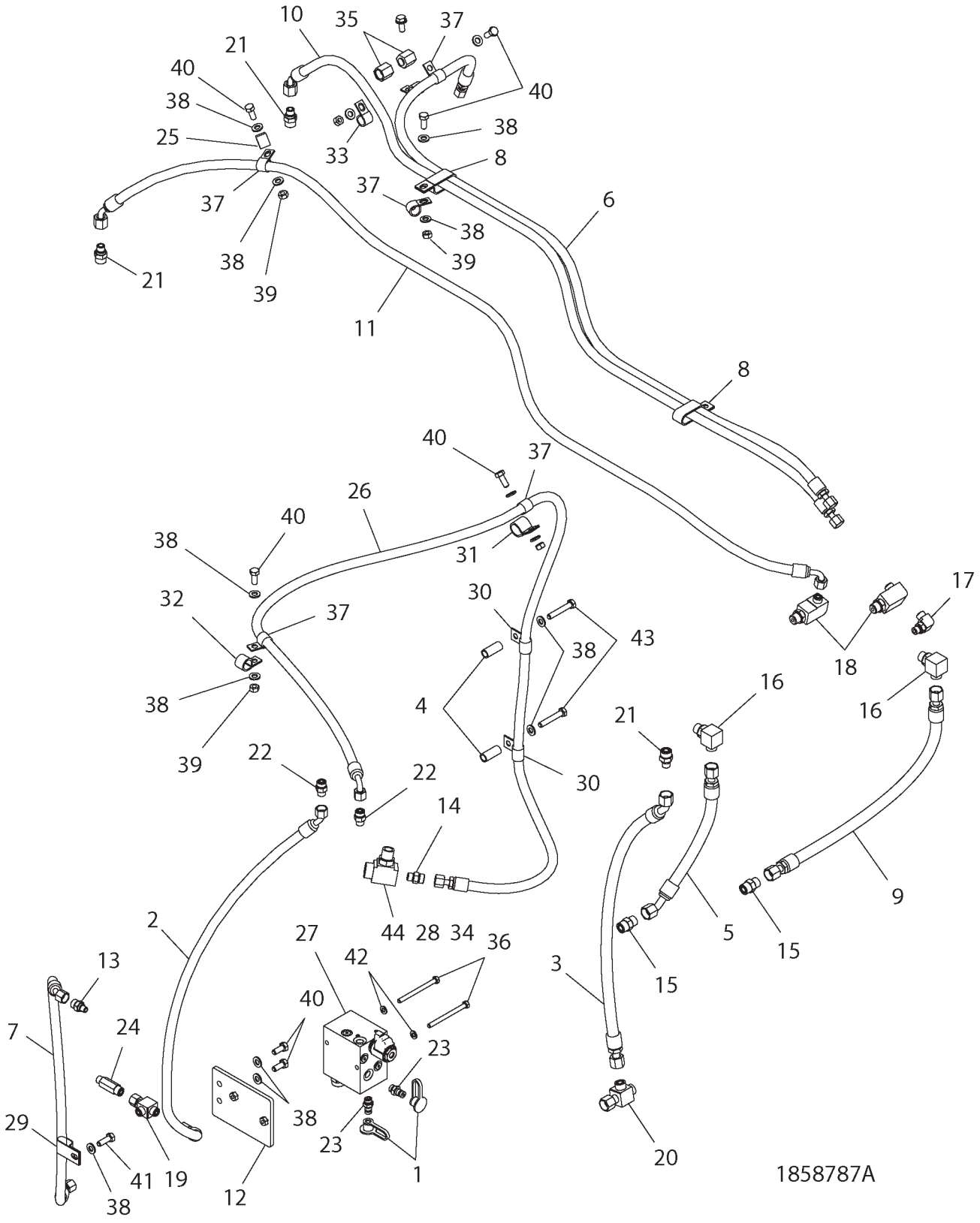

LINES GP-SERV BRAKE (B) - 185-8787

EAME ONLY

ITEM	NUMBER	QTY	DESCRIPTION
-	185-8787	--	LINES GP-SERV BRAKE (B) [A]
			(NOT SERVICED)
1	400323X1	2	CAP-DUST 12.6 DIA -RUBBER
2	CH192-6389	1	HOSE AS.-9.5 ID SAE 100R1
3	CH197-5910	1	HOSE AS.-12.7 ID SAE 100R1
4	CH209-3395	2	SPACER-17.14ODX12.52IDX40 ZN
5	CH212-0297	1	HOSE AS.-12.7 ID SAE 100R1
6	CH212-0302	2	HOSE AS.-9.5 ID SAE 100R1
7	CH212-0310	1	HOSE AS.-9.5 ID SAE 100R1
8	400625X1	2	CLIP-19.05 ID DBL,M10 OR 3/8
9	CH218-3575	1	HOSE AS.-12.7 ID SAE 100R1
10	CH221-0050	1	HOSE AS.-9.5 ID SAE 100R1
11	CH221-0051	1	HOSE AS.-9.5 ID SAE 100R1
12	221-0331	1	BRACKET AS
13	CH148-8326	1	CONNECTOR AS-6 ORFS X 4 STOR
14	400367X1	1	CONNECTOR AS-6 STOR -6 ORFS
15	CH148-8340	2	CONNECTOR AS. ELEC
	CH3K-0360	1	SEAL-O-RING (16.36IDX2.21DIA)
	CH6V-8398	1	SEAL-O-RING (16.03ODX1.78DIA)
16	CH148-8364	2	ELBOW AS-90DEG (8STOR-8ORFS)
	CH3K-0360	1	SEAL-O-RING (16.36IDX2.21DIA)
	CH6V-8398	1	SEAL-O-RING (16.03ODX1.78DIA)
17	CH148-8378	1	ELBOW AS-90 DEG 4 STOR X6 ORFS
	400318X1	1	SEAL-O-RING (11.89IDX1.98DIA)
	400378X1	1	SEAL-O-RING (12.83ODX1.78DIA)
18	CH148-8383	2	ELBOW AS-90DEG 8STOR X 6ORFS
	CH3K-0360	1	SEAL-O-RING (16.36IDX2.21DIA)
	400378X1	1	SEAL-O-RING (12.83ODX1.78DIA)
19	CH148-8433	1	TEE AS-6 ORFS X 3
	400378X1	2	SEAL-O-RING (12.83ODX1.78DIA)
20	CH148-8444	1	TEE-SWIVEL 3X -8 ORFS
	CH6V-8398	2	SEAL-O-RING (16.03IDX1.78DIA)
21	400428X1	3	CONNECTOR AS-STR-6STOR-8ORFS
22	400638X1	2	CONNECTOR AS-STR-6STOR-6ORFS
23	400324X1	2	NIPPLE AS-QUICK DISC-4&ORING
24	CH164-9869	1	CONNECTOR AS-6STOR X 6ORFS
25	CH1S-0994	1	CLIP-LOOP 20.64 ID
26	228-7494	1	HOSE AS.
27	232-0838	1	VALVE AS.
28	400319X1	1	SEAL-O-RING 19.18 IDX2.46 DIA
29	CH4D-7733	1	CLIP-LOOP 17.46ID
30	CH4D-7735	2	CLIP-LOOP 18.29ID
31	CH4S-1962	1	CLIP-LOOP 25.4 ID
32	CH6D-4244	1	CLIP-LOOP 22.22 ID W/COAT
33	CH6D-4246	4	CLIP-LOOP 19.05ID
34	400366X1	1	SEAL-O-RING 22.5 ODX1.78 DIA
35	400645X1	2	CAP AS-12.7 OD-8 ORFS
36	400028X1	2	BOLT-M8X1.25X100 ZNDI HHD 10.9
37	CH8M-2773	5	CLIP-LOOP 47.6 ID
38	400287X1	16	WASHER-HARD 11IDX21ODX2.5 ZND1
39	WR522218	5	NUT-M10-1.5,CL10.9,ZN,H,REG
40	400039X1	8	BOLT-M10X1.5X25 ZNDI HHD 10.9
41	400058X1	1	BOLT-M10X1.5X30 ZNDI HHD 10.9
42	400339X1	2	WASHER-HARD
43	400239X1	2	BOLT-M10X1.5X60 ZNDI HHD 10.9
44	CH9X-2541	1	TEE-6STOR X 10STOR X 12ORFS

[A] PART OF 179-2180 BASE COMMON AR

1858787A
PR: t05i29k58b0330

CYLINDER GP-MASTER - 184-5338
SERVICE BRAKE

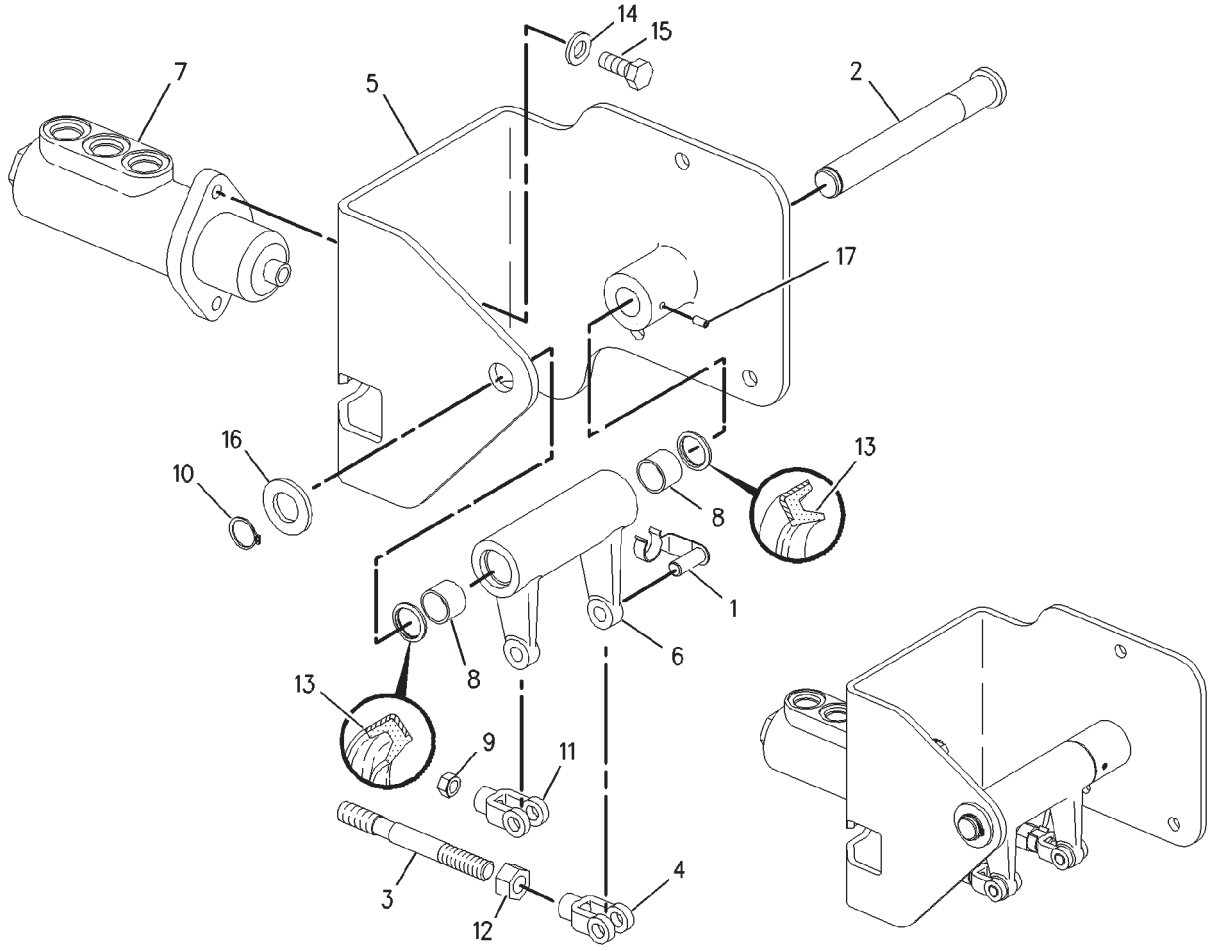

00886571

CYLINDER GP-MASTER - 184-5338
SERVICE BRAKE

ITEM	NUMBER	QTY	DESCRIPTION
-	184-5338	--	CYLINDER GP-MASTER [A]
1	CH8T-8932	2	PIN-SPRING
2	CH184-5339	1	ROD
3	184-5352	1	STEM
4	400117X1	1	ROD END
5	200-4316	1	BRACKET ASM
	CH8T-3490	1	NUT
6	200-4322	1	LEVER
7	200-4343	1	VALVE (BRAKE)
8	CH200-4384	2	BEARING
9	CH1B-4202	1	NUT (5/16-24)
10	CH2J-6356	1	RING-RETAINING
11	CH4J-2701	1	ROD END
12	CH7X-3374	1	NUT-FULL (1/2-20)
13	CH8F-7702	2	SEAL-LIP
14	400287X1	2	WASHER-HARD (11X21X2.5)
15	400039X1	2	BOLT (M10X1.5X25MM)
16	CH8T-4994	1	WASHER-HARD (20X36.5X3.5)
17	CH8T-9102	1	SETSCREW-SOCKET (M5X0.8X10MM)

[A] PART OF 200-4400 CONTROL GP-SRVC BRAKE

00886571
PR: t05i29k58b0331

LINES GP-BRAKE - 163-0386

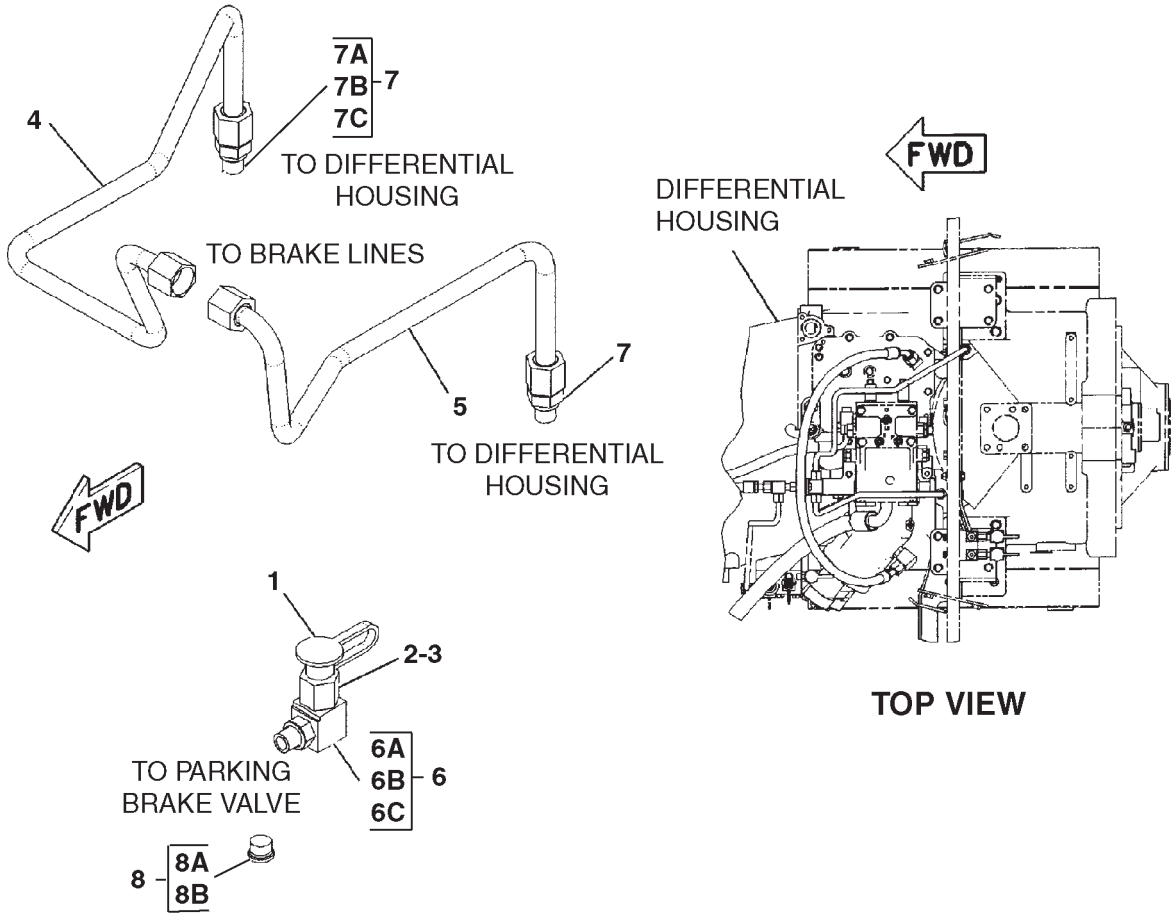

LINES GP-BRAKE - 163-0386

ITEM	NUMBER	QTY	DESCRIPTION
-	163-0386	--	LINES GP-BRAKE [A] (NOT SERVICED)
1	400323X1	1	CAP-DUST
2	CH8C-6416	1	FITTING (INCLUDES NUT)
	CH6V-8554	1	NUT
3	400607X1	1	NUT (13/16-16)
4	208-9814	1	TUBE ASM(INCLUDES NUT, SLEEVE, TUBE)
5	208-9815	1	TUBE ASM
6	400417X1	1	ELBOW AS (90DEG-6STOR-8ORFS)
6A	400318X1	1	SEAL-O-RING (11.89IDX1.98DIA)
6B	CH6V-8398	1	SEAL-O-RING (16.03ODX1.78DIA)
7	400428X1	2	CONNECTOR AS-STR (6STOR-8ORFS)
7A	400318X1	1	SEAL-O-RING (11.89IDX1.98DIA)
7B	CH6V-8398	1	SEAL-O-RING (16.03ODX1.78DIA)
7C	-----	1	CONNECTOR-SEAL (ORDER ITEM 7)
8	CH162-0177	1	PLUG AS-HSHD (9/16-18)
8A	CH3K-0360	1	SEAL-O-RING
8B	-----	1	PLUG (ORDER ITEM 8)

[A] PART OF 179-1952 BASE AR-COMMON

0823177A
PR: t05i29k58b0332

LINES GP-BRAKE - 193-1547
COMMON

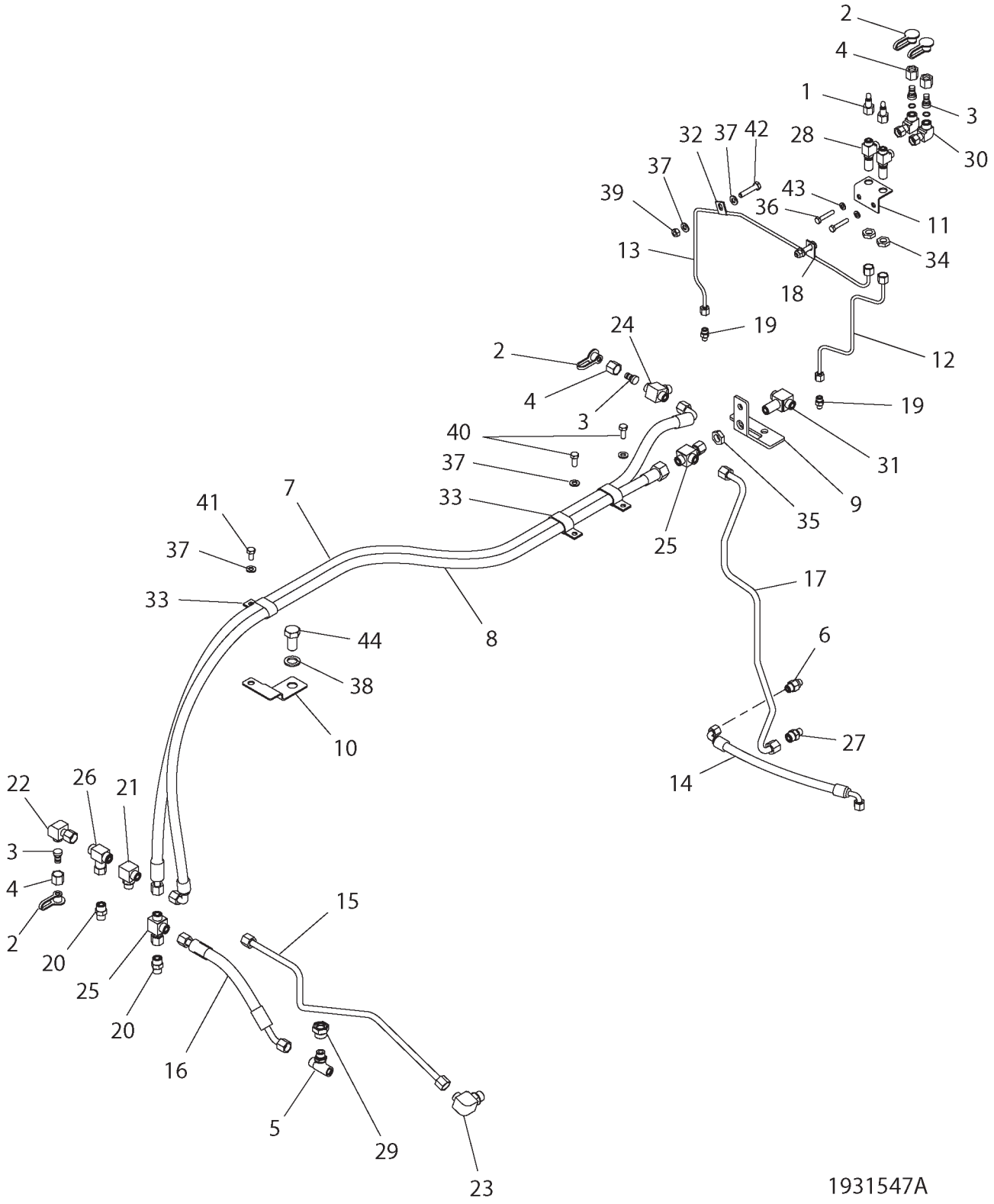

LINES GP-BRAKE - 193-1547
COMMON

ITEM	NUMBER	QTY	DESCRIPTION
-	193-1547	--	LINES GP-BRAKE (COMMON) [A]
1	500494D1	2	VALVE GP-PURGE (BLEEDER)
2	400323X1	4	CAP-DUST
3	CH8C-6416	4	NIPPLE AS
	CH6V-8554	1	NUT
4	400607X1	4	NUT (13/16-16)
5	CH172-5761	1	TEE AS (6STORX8STORX8ORFS)
	CH3K-0360	1	SEAL-O-RING (16.36IDX2.21DIA)
	CH6V-8398	1	SEAL-O-RING (16.03ODX1.78DIA)
6	CH172-9287	1	CONNECTOR AS (6 STOR -6 ORFS)
	400318X1	1	SEAL-O-RING (11.89IDX1.98DIA)
	400378X1	1	SEAL-O-RING (12.83ODX1.78DIA)
7	CH208-9829	1	HOSE ASM
8	CH208-9830	1	HOSE ASM
9	208-9838	1	BRACKET ASM
10	208-9839	1	BRACKET ASM
11	210-5610	1	BRACKET ASM
12	210-5648	1	TUBE ASM
13	210-5649	1	TUBE ASM
14	CH212-3585	1	HOSE ASM
15	219-9652	1	TUBE ASM
16	CH219-9653	1	HOSE ASM
17	220-3664	1	TUBE ASM
18	CH0L-2072	2	CLIP
19	400368X1	2	CONNECTOR AS (4STOR -4ORFS)
	400361X1	1	SEAL-O-RING (8.92ID X 1.83DIA)
	400377X1	1	SEAL-O-RING (11.23OD X 1.78DIA)
20	CH148-8340	2	CONNECTOR AS (8ORFS 8STOR)
	CH3K-0360	1	SEAL-O-RING (16.36IDX2.21DIA)
	CH6V-8398	1	SEAL-O-RING (16.03ODX1.78DIA)
21	CH148-8364	1	ELBOW AS-90DEG (8STOR-8ORFS)
	CH3K-0360	1	SEAL-O-RING (16.36IDX2.21DIA)
	CH6V-8398	1	SEAL-O-RING (16.03ODX1.78DIA)
22	CH148-8370	1	ELBOW AS-90DEG (8 ORFS SWVL)
	CH6V-8398	1	SEAL-O-RING (16.03ODX1.78DIA)
23	CH148-8372	1	ELBOW AS (10STOR 8ORFS)
	400319X1	1	SEAL-O-RING (19.18IDX2.46DIA)
	CH6V-8398	1	SEAL-O-RING (16.03ODX1.78DIA)
24	CH148-8436	1	TEE ASM (6 ORFS)
	CH3K-0360	1	SEAL-O-RING (16.36IDX2.21DIA)
	CH6V-8398	2	SEAL-O-RING (16.03ODX1.78DIA)
25	CH148-8444	3	TEE-SWIVEL 3X -8 ORFS
	CH6V-8398	2	SEAL-O-RING (16.03IDX1.78DIA)

CONTINUED

[A] PART OF:
179-1952; 179-2180 BASE COMMON AR

LINES GP-BRAKE - 193-1547
COMMON

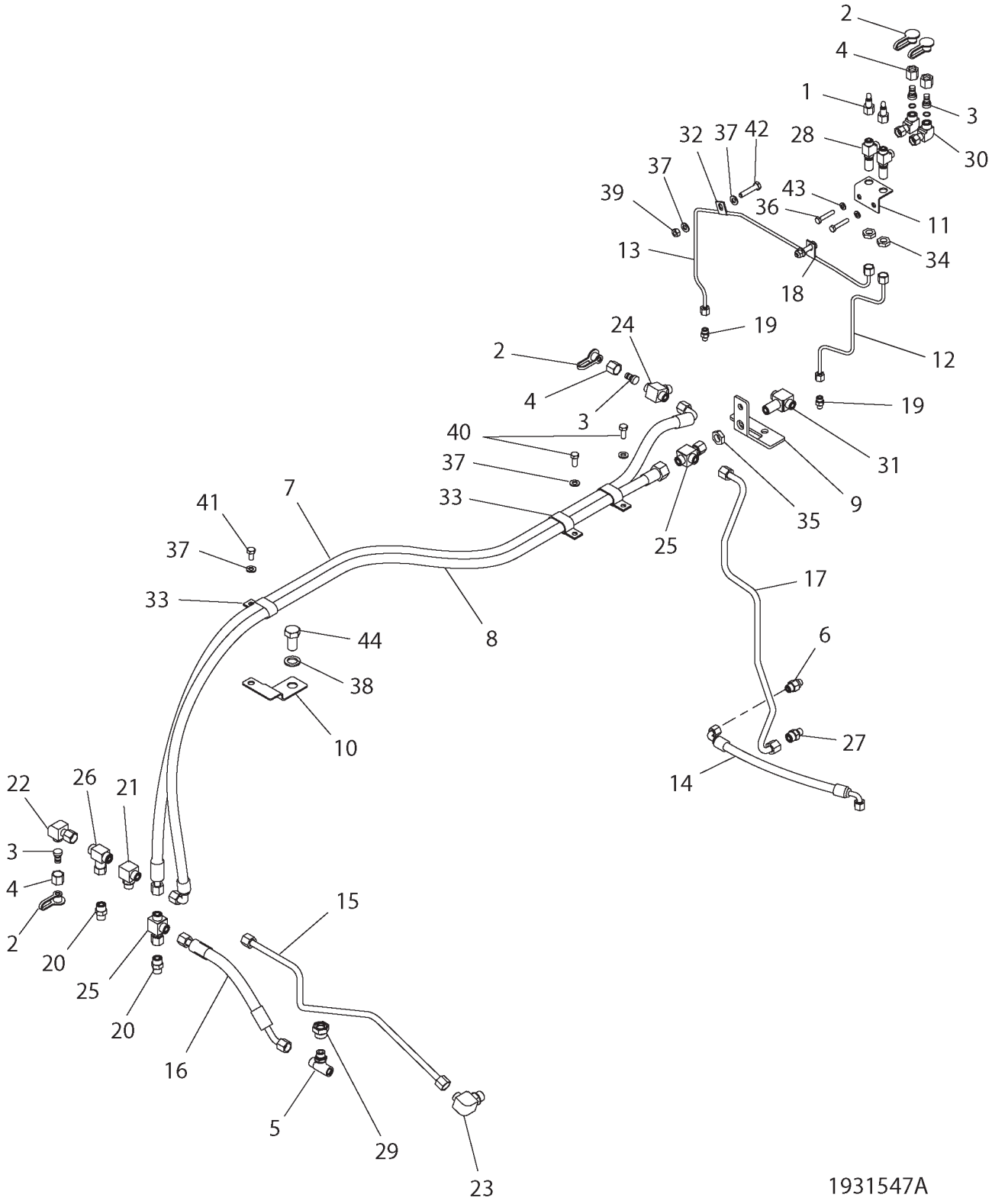

LINES GP-BRAKE - 193-1547
COMMON

ITEM	NUMBER	QTY	DESCRIPTION
-	193-1547	--	LINES GP-BRAKE (COMMON) [A]
			(NOT SERVICED)
26	400614X1	1	TEE AS (8 ORFS)
	CH6V-8398	2	SEAL-O-RING (16.03ODX1.78DIA)
27	400428X1	1	CONNECTOR AS -6STOR-8ORFS
	400318X1	1	SEAL-O-RING (11.89IDX1.98DIA)
	CH6V-8398	1	SEAL-O-RING (16.03ODX1.78DIA)
28	400618X1	2	TEE AS-BLKHD (6 ORFS)
	400378X1	3	SEAL-O-RING (12.83ODX1.78DIA)
29	400636X1	1	ADAPTER AS (STR-12 STOR-8 PORT)
	400416X1	1	SEAL-O-RING (23.47IDX2.95DIA)
30	400825X1	2	ELBOW AS-90DEG (8ORFS)
	CH6V-8398	2	SEAL-O-RING (16.03ODX1.78DIA)
31	CH169-4273	1	TEE AS-BLKHD UNION (8ORFS)
	CH6V-8398	3	SEAL-O-RING (16.03ODX1.78DIA)
32	CH2B-2404	1	CLIP
33	CH6D-1641	3	CLIP
34	400347X1	2	NUT-BULKHEAD (11/16-16)
35	400348X1	1	NUT-BULKHEAD (13/16-16)
36	400024X1	2	BOLT (M8X1.25X45MM)
37	400287X1	7	WASHER-HARD (11X21X2.5)
38	400080X1	1	WASHER-PLATED (22X35X3.5)
39	WR522218	2	NUT (M10X1.5)
40	400039X1	2	BOLT (M10X1.5X25MM)
41	400040X1	1	BOLT (M10X1.5X20MM)
42	400226X1	2	BOLT (M10X1.5X50MM)
43	400339X1	2	WASHER-HARD (8.8X16X2)
44	400234X1	1	BOLT (M20X2.5X40MM)
45	500950D1	2	NUT-TUBE (NOT SHOWN)

[A] PART OF:
179-1952; 179-2180 BASE COMMON AR

1931547A
PR: t05i29k58b0333

LINES & CONTROL GP (KIT) - 190-0436

AIR TRAILER BRAKE (WITHOUT HITCH)
(EAME ONLY)

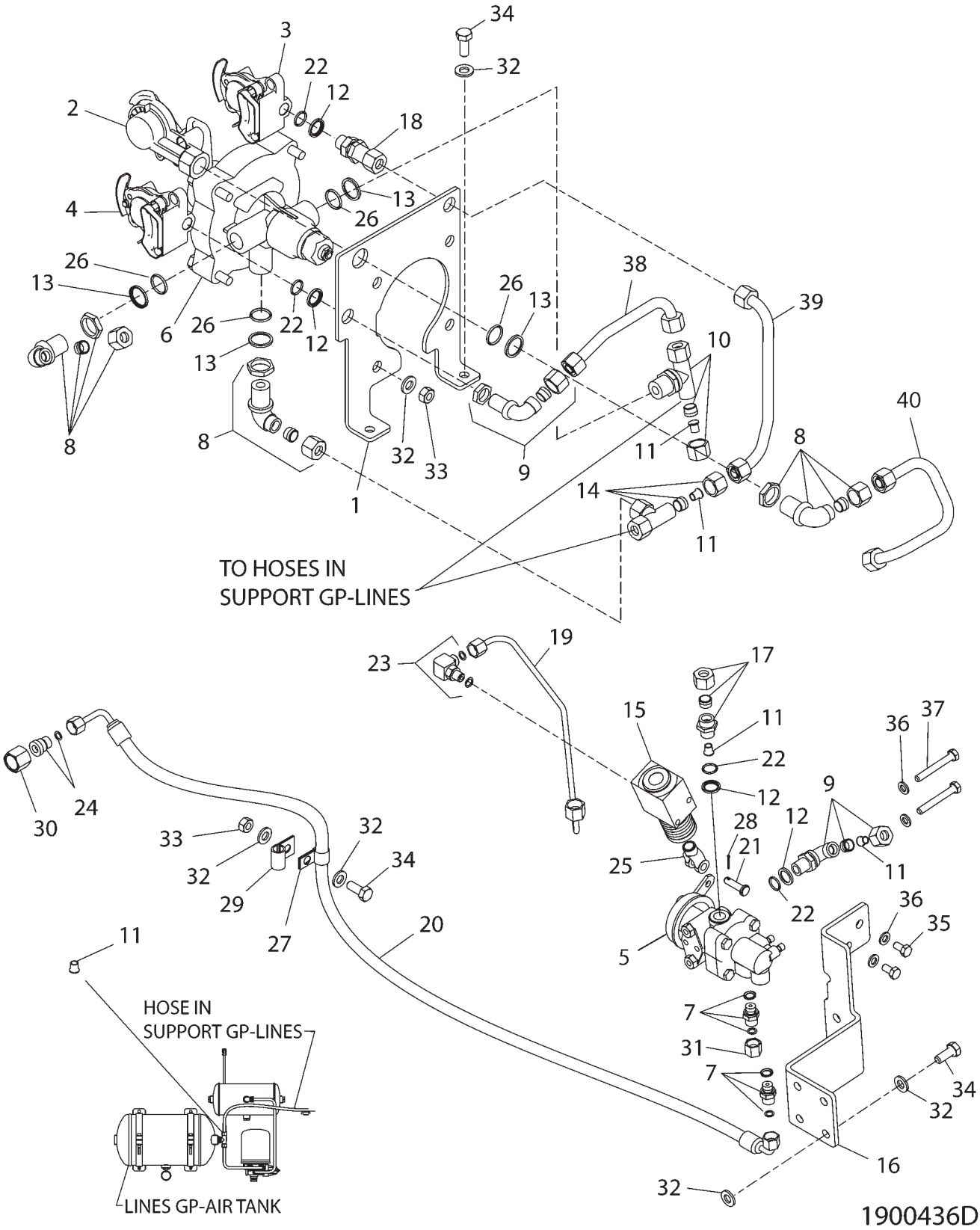

LINES & CONTROL GP (KIT) - 190-0436

AIR TRAILER BRAKE (WITHOUT HITCH)
(EAME ONLY)

ITEM	NUMBER	QTY	DESCRIPTION
-	190-0436	--	LINES & CONTROL GP
1	162-9766	1	BRACKET
2	CH171-1105	1	CONNECTOR AS (QUICK)
3	CH171-1106	1	CONNECTOR AS (QUICK)
4	CH171-1107	1	CONNECTOR AS (QUICK)
5	180-1667	1	VALVE-CONTROL
6	180-2519	1	VALVE-CONTROL
7	CH183-4236	2	ADAPTER GP
	400377X1	1	SEAL-O-RING (11.23OD X 1.78DIA)
	CH8C-5200	1	SEAL
8	CH185-9753	3	ELBOW AS-90DEG (M16XM18)
9	CH185-9759	2	ELBOW AS-90DEG (M16XM18)
	CH187-6297	1	FERRULE
	400352X1	1	NUT-TUBE (M18X1.5)
	187-9012	1	LOCKNUT
10	CH185-9762	1	TEE AS (M18XM22XM18)
	CH187-6297	2	FERRULE
	400352X1	2	NUT-TUBE (M18X1.5)
	CH187-6486	1	LOCKNUT
11	CH185-9768	5	INSERT
12	CH185-9772	4	RING-BACKUP
13	CH185-9773	4	RING-BACKUP
14	CH190-0430	1	TEE AS (M18X3)
	CH3E-4297	1	SEAL-O-RING (10IDX1.5DIA)
	CH187-6297	2	FERRULE (12OD TUBE)
	400352X1	2	NUT-TUBE (M18X1.5)
15	192-6366	1	ACTUATOR AS
16	192-6392	1	BRACKET AS
17	CH200-4349	1	ADAPTER (M18XM16)
	CH187-6297	1	FERRULE (12OD TUBE)
	400352X1	1	NUT-TUBE (M18X1.5)
18	CH200-4359	1	COUPLING
19	200-4374	1	TUBE AS
20	CH200-4379	1	HOSE AS
21	CH095-1316	1	PIN-CLEVIS
22	CH122-9250	4	SEAL-O-RING
23	400650X1	1	ELBOW AS-90DEG-4STORX4ORFS
	400361X1	1	SEAL-O-RING (8.92ID X 1.83DIA)
	400377X1	1	SEAL-O-RING (11.23OD X 1.78DIA)
	-----	1	ELBOW (ORDER ITEM 23)

[A] PART OF:
185-8860 BRAKE AR-AIR
186-1620 BRAKE AR-AIR

CONTINUED

LINES & CONTROL GP - 190-0436

AIR TRAILER BRAKE (WITHOUT HITCH)
(EAME ONLY)

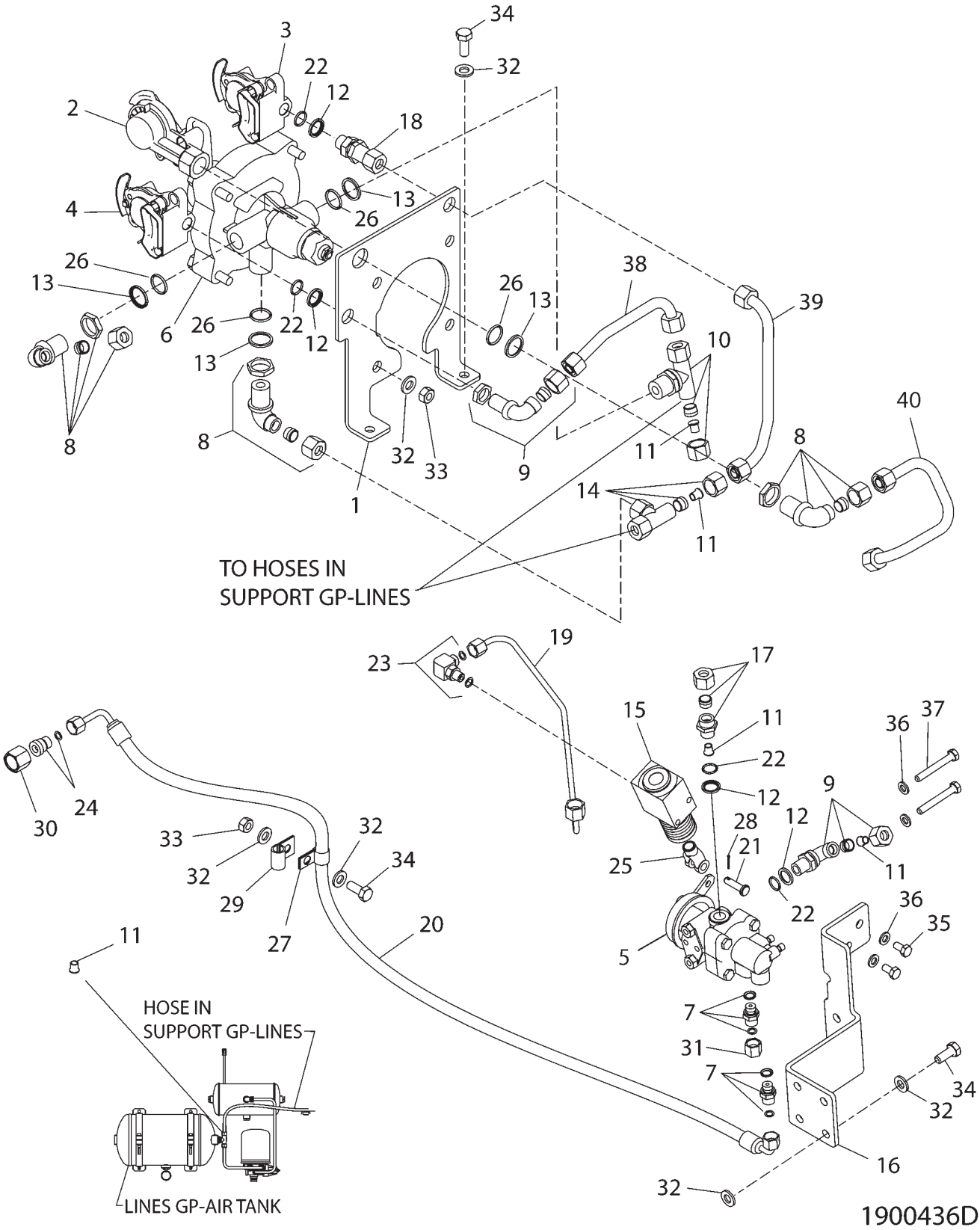

LINES & CONTROL GP - 190-0436

AIR TRAILER BRAKE (WITHOUT HITCH)
(EAME ONLY)

ITEM	NUMBER	QTY	DESCRIPTION
-	190-0436	--	LINES GP-CONTRL (SERVICED BY COMPONENTS)
24	CH148-8419	1	REDUCER AS (40RFSX80RFS)
	400377X1	1	SEAL-O-RING (11.23OD X 1.78DIA)
	CH6V-8935	1	REDUCER-O-RING
25	400117X1	1	END-YOKE ROD
26	CH3E-6762	4	SEAL-O-RING (20.3IDX2.4DIA)
27	CH4K-8864	1	CLIP-LOOP (14.29ID)
28	CH5B-9192	1	PIN-COTTER (1.59DIAX15.88 BRS)
29	400621X1	1	CLIP (12.7IDX3/8)
30	6V-8554	1	NUT (12.7 ORFS)
31	CH6V-9828	1	CAP AS
31	105-5211	1	PLUG (OLDER MODELS) (INCLS SEAL)
	6V-9028	1	SEAL-O-RING
32	400287X1	12	WASHER-HARD (11X21X2.5)
33	WR522218	5	NUT (M10X1.5)
34	400039X1	7	BOLT (M10X1.5X25MM)
35	400227X1	2	BOLT (M8X1.25X16MM)
36	400339X1	4	WASHER-HARD (8.8X16X2)
37	400242X1	2	BOLT (M8X1.25X60MM)
38	183-4241	1	TUBE AS
39	187-9020	1	TUBE AS
40	190-0429	1	TUBE AS

[A] PART OF:
185-8860 BRAKE AR-AIR
186-1620 BRAKE AR-AIR

1900436D
PR: t05i29k58b0334

LINES GP-CONTROL (KIT) - 200-4310

AIR TRAILER BRAKE (WITH HITCH)
EAME ONLY

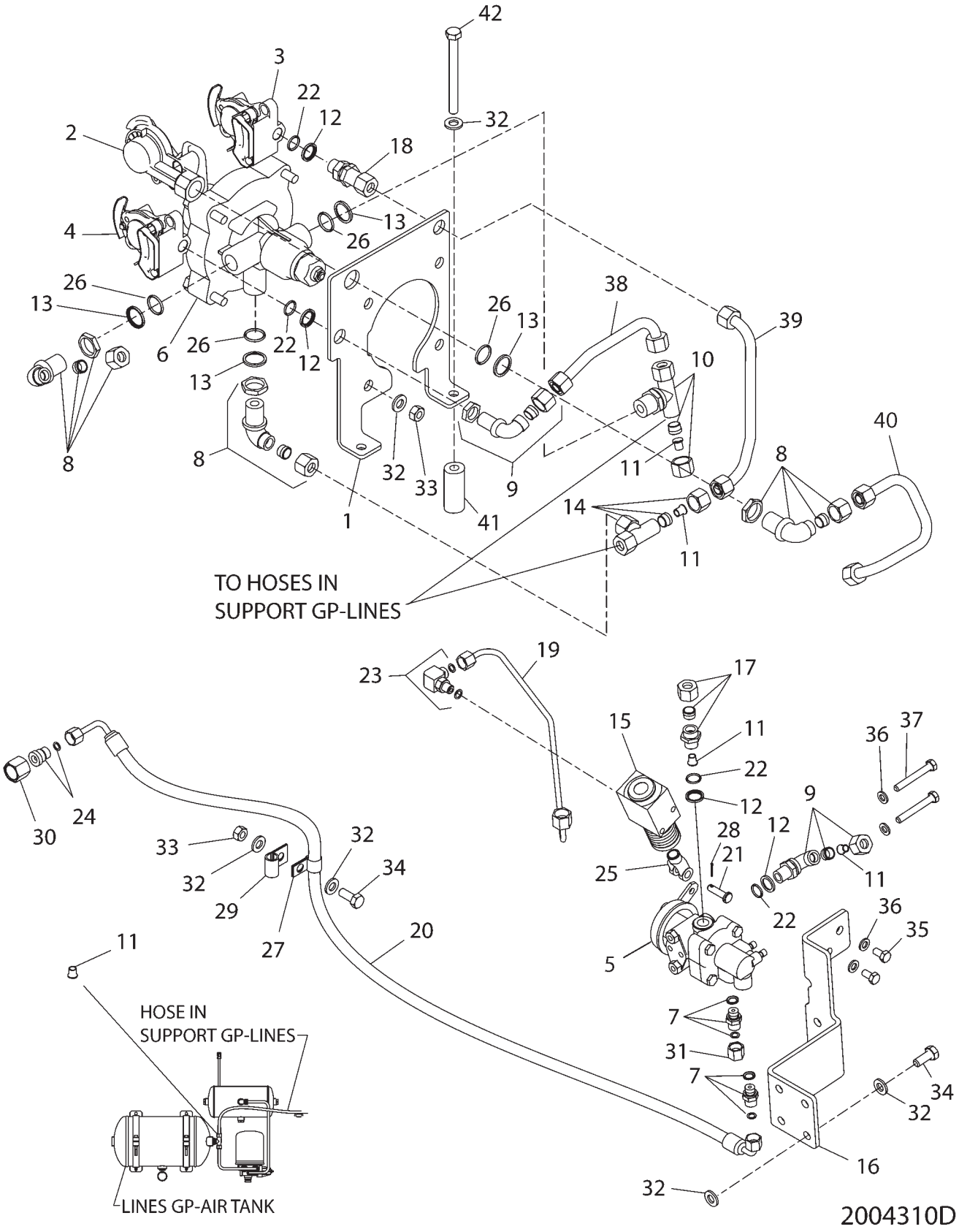

LINES GP-CONTROL (KIT) - 200-4310

AIR TRAILER BRAKE (WITH HITCH)
EAME ONLY

ITEM	NUMBER	QTY	DESCRIPTION
-	200-4310	--	LINES GP-AIR TR BRAKE [A]
1	162-9766	1	BRACKET
2	CH171-1105	1	CONNECTOR AS (QUICK)
3	CH171-1106	1	CONNECTOR AS (QUICK)
4	CH171-1107	1	CONNECTOR AS (QUICK)
5	180-1667	1	VALVE-CONTROL
6	180-2519	1	VALVE-CONTROL
7	CH183-4236	2	ADAPTER GP
	400377X1	1	SEAL-O-RING (11.23OD X 1.78DIA)
	CH8C-5200	1	SEAL
8	CH185-9753	3	ELBOW AS-90DEG (M16XM18)
9	CH185-9759	2	ELBOW AS-90DEG (M16XM18)
	CH187-6297	1	FERRULE
	400352X1	1	NUT-TUBE (M18X1.5)
	187-9012	1	LOCKNUT
10	CH185-9762	1	TEE AS (M18XM22XM18)
	CH187-6297	2	FERRULE
	400352X1	2	NUT-TUBE (M18X1.5)
	CH187-6486	1	LOCKNUT
11	CH185-9768	5	INSERT
12	CH185-9772	4	RING-BACKUP
13	CH185-9773	4	RING-BACKUP
14	CH190-0430	1	TEE AS (M18X3)
	CH3E-4297	1	SEAL-O-RING (10IDX1.5DIA)
	CH187-6297	2	FERRULE (12OD TUBE)
	400352X1	2	NUT-TUBE (M18X1.5)
15	192-6366	1	ACTUATOR AS
16	192-6392	1	BRACKET AS
17	CH200-4349	1	ADAPTER (M18XM16)
	CH187-6297	1	FERRULE (12OD TUBE)
	400352X1	1	NUT-TUBE (M18X1.5)
18	CH200-4359	1	COUPLING
19	200-4374	1	TUBE AS
20	CH200-4379	1	HOSE AS
21	CH095-1316	1	PIN-CLEVIS
22	CH122-9250	4	SEAL-O-RING
23	400650X1	1	ELBOW AS-90DEG-4STORX4ORFS
	400361X1	1	SEAL-O-RING (8.92ID X 1.83DIA)
	400377X1	1	SEAL-O-RING (11.23OD X 1.78DIA)
	CH6V-8628	1	ELBOW

[A] PART OF 192-6390; 192-6400;
502358D1 BRAKE AR-AIR

CONTINUED

LINES GP-CONTROL (KIT) - 210-4310

AIR TRAILER BRAKE (WITH HITCH)
EAME ONLY

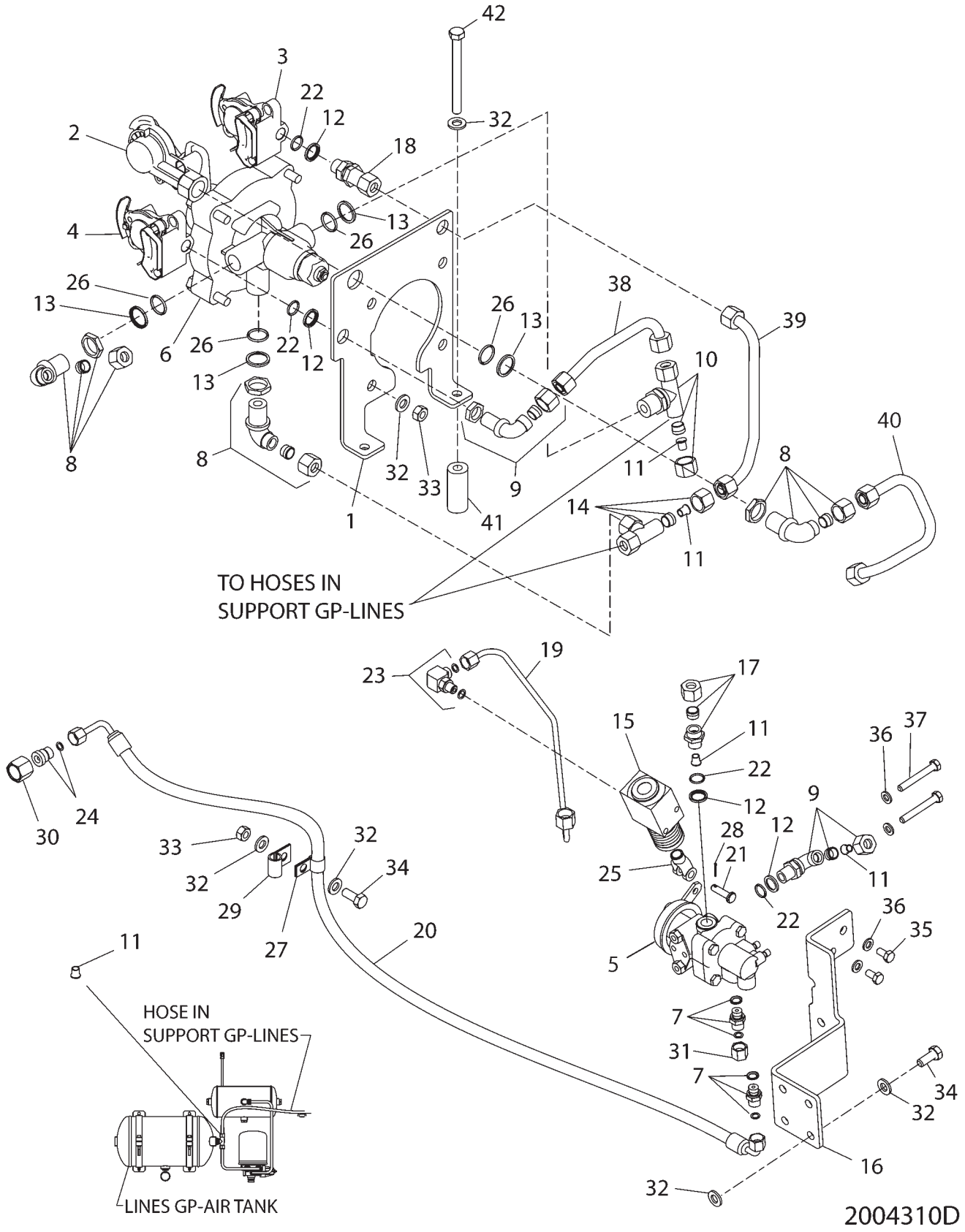

LINES GP-CONTROL (KIT) - 210-4310

AIR TRAILER BRAKE (WITH HITCH)
EAME ONLY

ITEM	NUMBER	QTY	DESCRIPTION
-	200-4310	--	LINES GP-AIR TR BRAKE [A]
24	CH148-8419	1	REDUCER AS (40RFSX80RFS)
	400377X1	1	SEAL-O-RING (11.23OD X 1.78DIA)
	CH6V-8935	1	REDUCER-O-RING
25	400117X1	1	END-YOKE ROD
26	CH3E-6762	4	SEAL-O-RING (20.3IDX2.4DIA)
27	CH4K-8864	1	CLIP-LOOP (14.29ID)
28	CH5B-9192	1	PIN-COTTER (1.59DIAX15.88 BRS)
29	400621X1	3	CLIP (12.7IDX3/8)
30	6V-8554	1	NUT (12.7 ORFS)
31	CH6V-9828	1	CAP AS
31	105-5211	1	PLUG (OLDER MODELS) (INCLS SEAL)
	6V-9028	1	SEAL-O-RING
32	400287X1	14	WASHER-HARD (11X21X2.5)
33	WR522218	6	NUT (M10X1.5)
34	400039X1	6	BOLT (M10X1.5X25MM)
35	400227X1	2	BOLT (M8X1.25X16MM)
36	400339X1	4	WASHER-HARD (8.8X16X2)
37	400242X1	2	BOLT (M8X1.25X60MM)
38	183-4241	1	TUBE AS
39	187-9020	1	TUBE AS
40	190-0429	1	TUBE AS
41	CH198-1963	2	SPACER
42	400240X1	2	BOLT (M10X1.5X110)

[A] PART OF 192-6390; 192-6400;
502358D1 BRAKE AR-AIR

2004310D
PR: t05i29k58b0335

SUPPORT GP-LINES - 200-4320

EAME ONLY

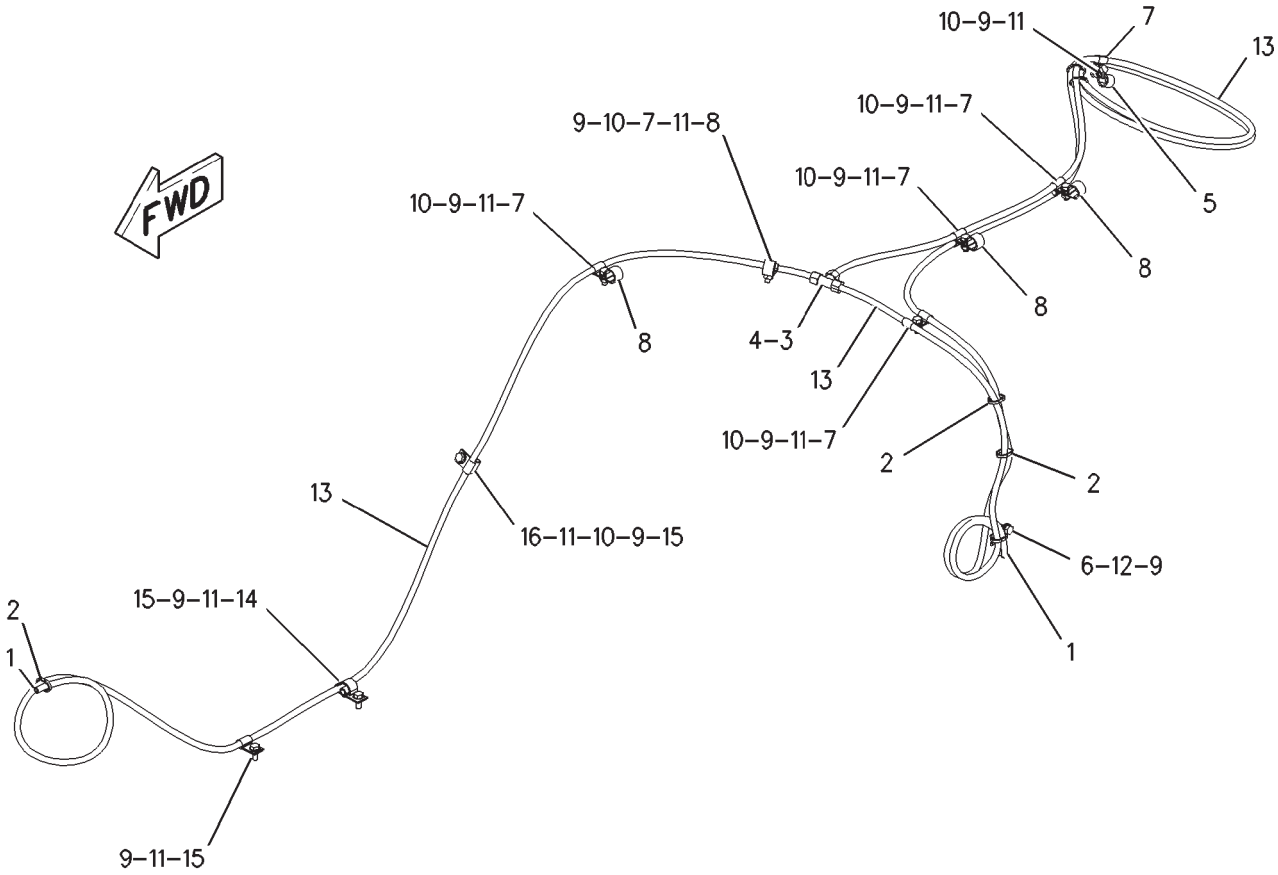

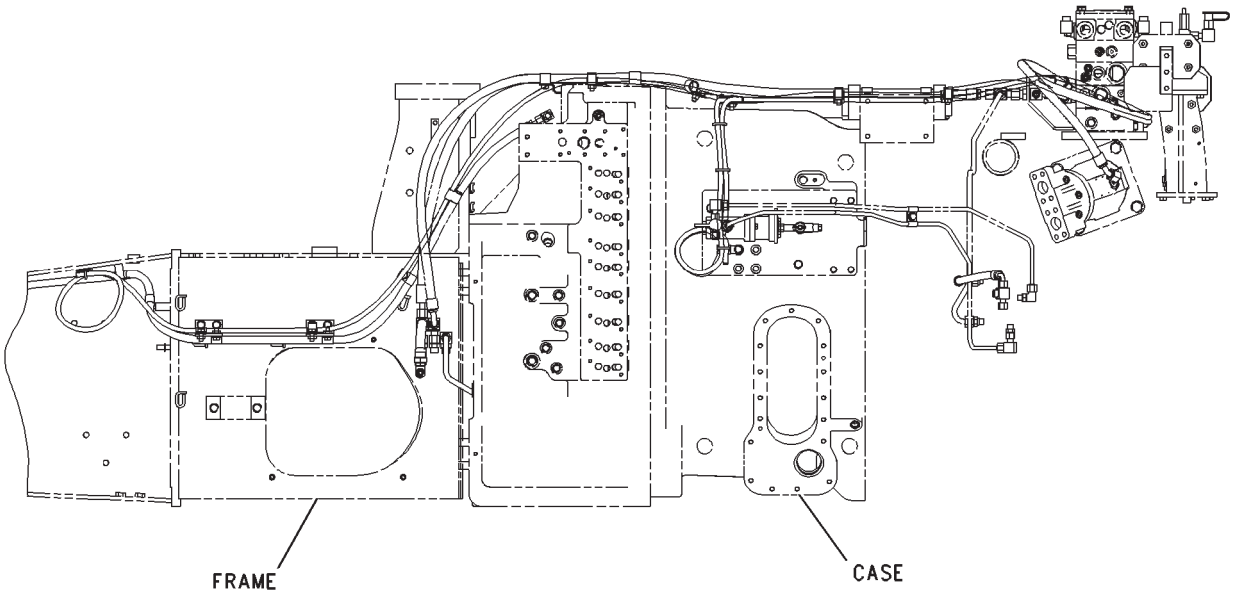

LEFT SIDE VIEW

00887780

SUPPORT GP-LINES - 200-4320

EAME ONLY

ITEM	NUMBER	QTY	DESCRIPTION
-	200-4320	--	SUPPORT GP-LINES [A] (NOT SERVICED)
1	4H-0408	5	PLUG-PROTECTION (10MM)
2	CH7K-1181	6	STRAP-CABLE
3	192-6398	1	FITTING AS
4	CH185-9768	3	INSERT
5	CH1S-0994	1	CLIP
6	CH4P-7581	1	CLIP
7	400621X1	10	CLIP
8	400688X1	4	CLIP
9	400287X1	17	WASHER-HARD (11X21X2.5MM THK)
10	WR522218	7	NUT (M10X1.5 THD)
11	400039X1	9	BOLT (M10X1.5X25MM)
12	400040X1	1	BOLT (M10X1.5X20MM)
13	200-4321	AR	TUBE-PLASTIC (938CM)
14	200-4339	1	CLIP
15	124-1479	3	CLIP
16	CH3S-8664	1	CLIP

[A] PART OF 179-2180 BASE COMMON AR

00887780
PR: t05i29k58b0336

TANK & LINES GP-AIR - 190-0435

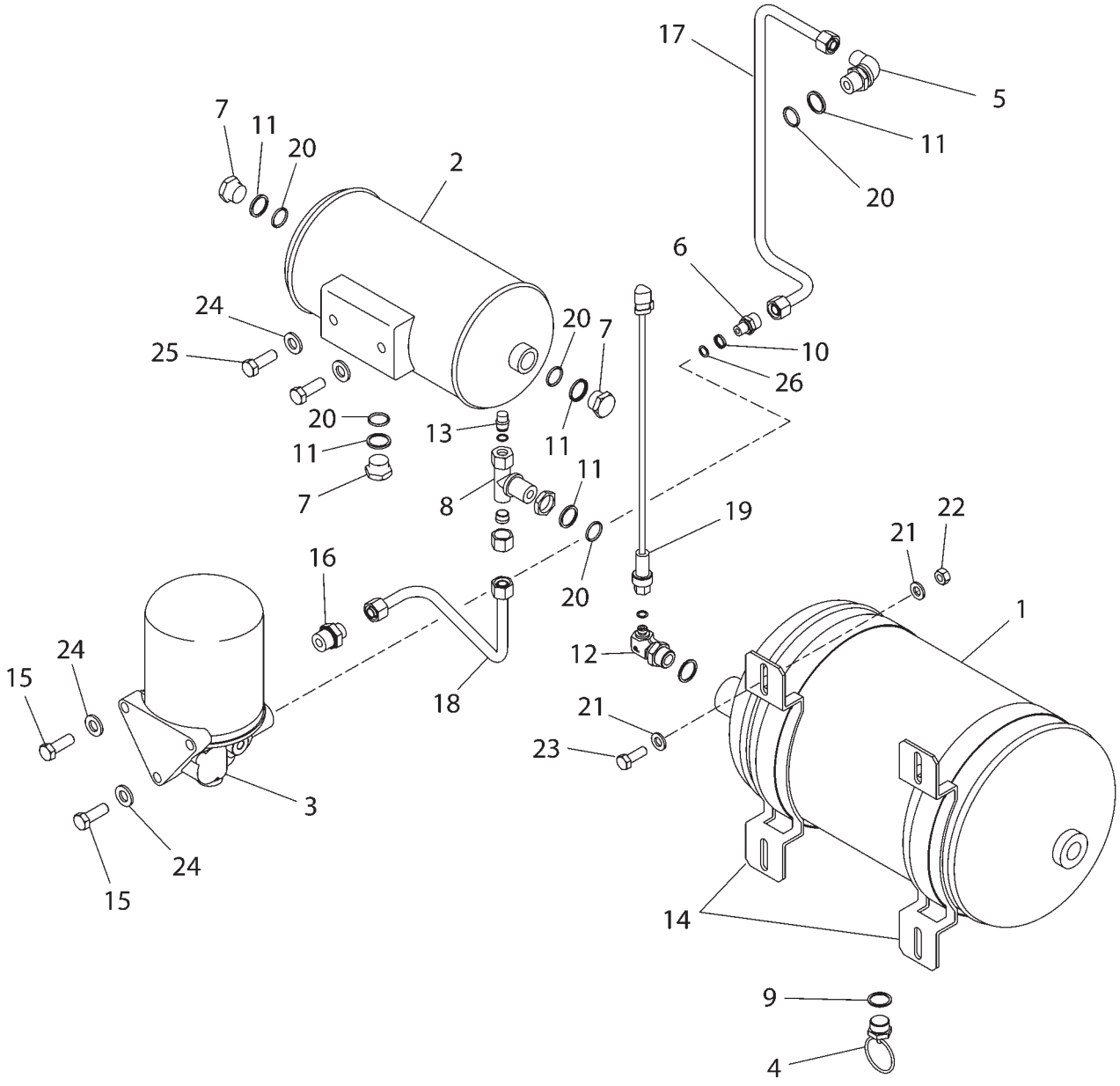

1900435D

TANK & LINES GP-AIR - 190-0435

ITEM	NUMBER	QTY	DESCRIPTION
-	190-0435	--	TANK & LINES GP-AIR [A]
			(NOT SERVICED)
1	174-8822	1	TANK-AIR
2	177-9555	1	TANK-AIR
3	178-7197	1	AIR DRYER GP
	187-3185	1	KIT-CARTRIDGE (DESICCANT)
	187-5245	1	KIT-VALVE (PURGE)
	187-5246	1	KIT-GOVERNOR
4	180-5485	1	VALVE-DRAIN
5	CH185-9753	1	ELBOW AS-90DEG (M16XM18)
6	185-9754	1	ADAPTER
7	185-9756	3	PLUG
8	CH185-9762	1	TEE GP (M18XM22XM18)(INCLS ITEMS BELOW)
	CH187-6297	2	FERRULE
	400352X1	2	NUT-TUBE (M18X1.5)
	CH187-6486	1	LOCKNUT (M22X1.5)
9	185-9769	1	WASHER-SEAL (22.2X26.9X1.5)
10	185-9771	1	RING-BACKUP
11	CH185-9773	5	RING-BACKUP
12	185-9774	1	ELBOW (INCLS SEALS)
	400361X1	1	SEAL-O-RING (8.92ID X 1.83DIA)
	400366X1	1	SEAL-O-RING (22.5OD X 1.78DIA)
13	CH190-0431	1	CAP (INCLS SEAL)
	CH3E-4297	1	SEAL-O-RING
14	190-0446	2	BRACKET
15	400011X1	3	BOLT (M12X1.5X35MM)
16	196-1969	1	ADAPTER ASM (INCLS SEAL)
	CH175-5327	1	SEAL
17	196-1970	1	TUBE ASM(INCL. FERRUEL, NUT & TUBE)
18	196-1971	1	TUBE ASM (INCL. FERRULE, NUT & TUBE)
19	CH194-6725	1	SENSOR GP-PRESSURE [B]
20	CH3E-6762	5	SEAL-O-RING
21	400287X1	8	WASHER-HARD (11X21X2.5)
22	WR522218	4	NUT (M10X1.5)
23	400058X1	4	BOLT (M10X1.5X30MM)
24	400357X1	5	WASHER-HARD (M12X25.5X3)
25	400064X1	2	BOLT (M12X1.75X35MM)
26	CH9T-4057	1	SEAL-O-RING

[A] PART OF:
185-8660; 186-1620 BRAKE AR-AIR TR
190-0439; 190-0440 TANK AR-AIR
192-6390; 192-6400 BRAKE AR-AIR
210-5703; 210-5704 TANK AR-AIR
502357D1; 502358D1 BRAKE AR-AIR
502359D1; 502360D1 TANK AR-AIR

[B] SENSOR ITEM 19:
THIS SENSOR IS USED IN MULTIPLE APPLICATIONS DO NOT USE SPN MODIFIER YOU MUST USE APPLICATION SPECIFIC MODIFIERS IN DBAM I.E.

1900435D
PR: t05i29k58b0337

TANK AR-AIR - 190-0439
MT835 & MT845
EAME ONLY

NO ILLUSTRATION

NOTIF

TANK AR-AIR - 190-0439

MT835 & MT845
EAME ONLY

ITEM	NUMBER	QTY	DESCRIPTION
-	190-0439	--	TANK AR-AIR
1	180-2937	1	AIR COMPRESSOR GP (NOT SERVICED) (SEE BREAKDOWN FOR COMPONENTS)
2	190-0435	1	TANK & LINES GP-AIR (NOT SERVICED) (SEE BREAKDOWN FOR COMPONENTS)
3	190-0438	1	LINES GP-COUPLER (NOT SERVICED) (SEE BREAKDOWN FOR COMPONENTS)

NOTIF
PR: t05i29k58b0338

TANK AR-AIR - 190-0440

MT855 & MT865
EAME ONLY

NO ILLUSTRATION

NOTIF

TANK AR-AIR - 190-0440

MT855 & MT865
EAME ONLY

ITEM	NUMBER	QTY	DESCRIPTION
-	190-0440	--	TANK AR-AIR
1	500970D1	1	AIR COMPRESSOR GP (NOT SERVICED) (SEE BREAKDOWN FOR COMPONENTS)
2	190-0435	1	TANK & LINES GP-AIR (NOT SERVICED) (SEE BREAKDOWN FOR COMPONENTS)
3	190-0438	1	LINES GP-COUPLER (NOT SERVICED) (SEE BREAKDOWN FOR COMPONENTS)

NOTIF
PR: t05i29k58b0339

TANK AR-AIR - 210-5703

MT835 & MT845
ROW & SPECIAL ONLY

NO ILLUSTRATION

NOTIF

TANK AR-AIR - 210-5703

MT835 & MT845
ROW & SPECIAL ONLY

ITEM	NUMBER	QTY	DESCRIPTION
-	210-5703	--	TANK AR-AIR
1	180-2937	1	AIR COMPRESSOR GP (NOT SERVICED) (SEE BREAKDOWN FOR COMPONENTS)
2	190-0435	1	TANK & LINES GP-AIR (NOT SERVICED) (SEE BREAKDOWN FOR COMPONENTS)
3	210-0851	1	LINES GP-COUPLER (NOT SERVICED) (SEE BREAKDOWN FOR COMPONENTS)

NOTIF
PR: t05i29k58b0340

TANK AR-AIR - 210-5704

MT855 & MT865
ROW & SPECIAL ONLY

NO ILLUSTRATION

NOTIF

TANK AR-AIR - 210-5704

MT855 & MT865
ROW & SPECIAL ONLY

ITEM	NUMBER	QTY	DESCRIPTION
-	210-5704	--	TANK AR-AIR
1	500970D1	1	AIR COMPRESSOR GP (NOT SERVICED) (SEE BREAKDOWN FOR COMPONENTS)
2	190-0435	1	TANK & LINES GP-AIR (NOT SERVICED) (SEE BREAKDOWN FOR COMPONENTS)
3	210-0851	1	LINES GP-COUPLER (NOT SERVICED) (SEE BREAKDOWN FOR COMPONENTS)

NOTIF
PR: t05i29k58b0341

VALVE GP-ACCUMULATOR CHARGING - 216-6972

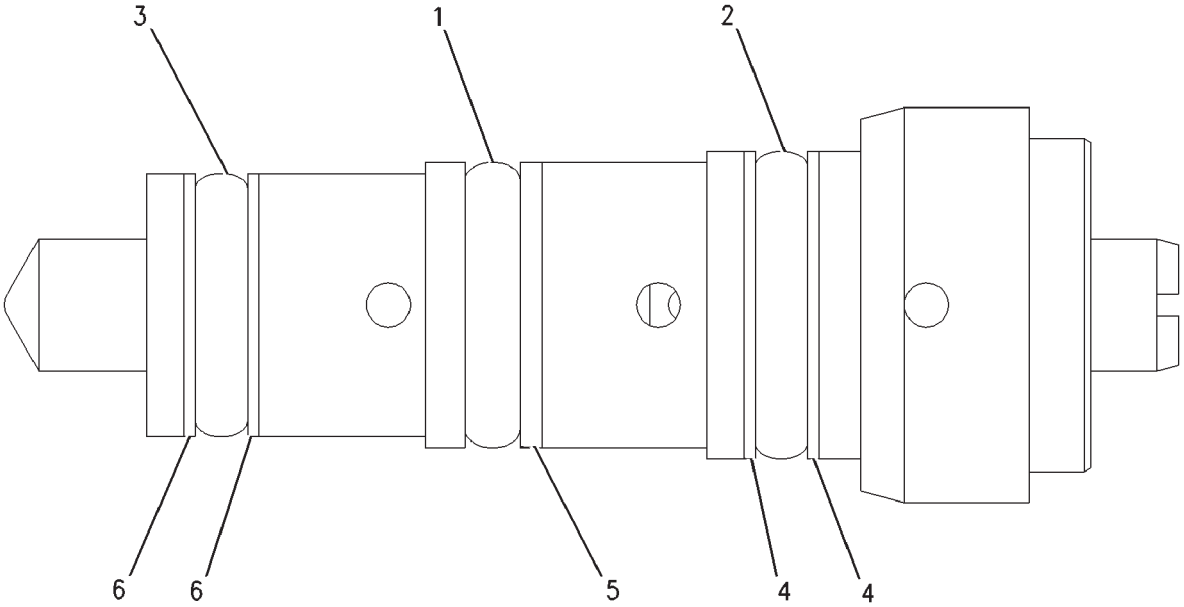

00894814

VALVE GP-ACCUMULATOR CHARGING - 216-6972

ITEM	NUMBER	QTY	DESCRIPTION
-	216-6972	--	VALVE GP-ACCUMULATOR CHARGING [A]
1	CH5W-9411	1	SEAL-O-RING
2	CH095-1750	1	SEAL-O-RING
3	CH161-6154	1	SEAL-O-RING
4	CH216-7116	2	RING-BACKUP
5	CH216-7117	1	RING-BACKUP
6	CH216-7118	2	RING-BACKUP

[A] PART OF:
192-4707 VALVE GP-CONTROL
209-5019 VALVE GP-CONTROL
209-5021 VALVE GP-CONTROL

00894814
PR: t05i29k58b0342

VALVE GP-PARKING BRAKE - 200-4351

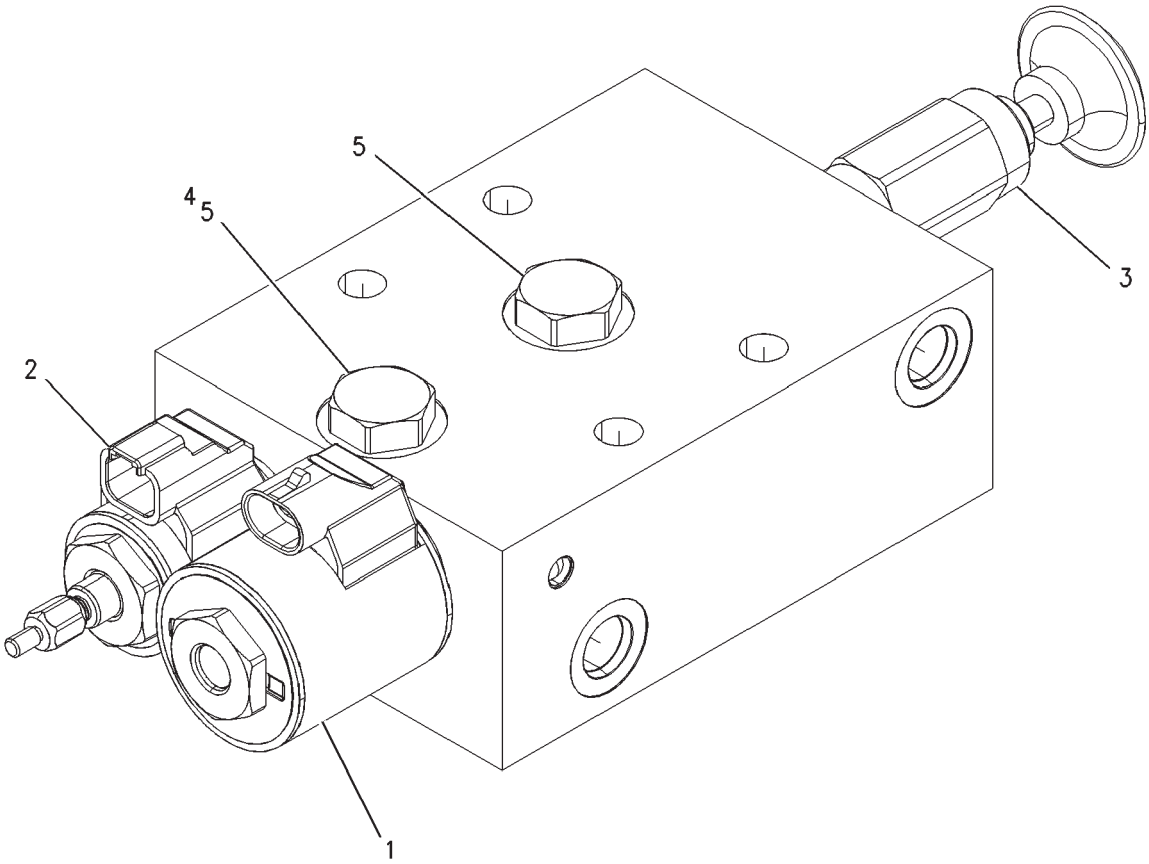

00871963

VALVE GP-PARKING BRAKE - 200-4351

ITEM	NUMBER	QTY	DESCRIPTION
-	200-4351	--	VALVE GP-PARKING BRAKE [A]
1	200-4325	1	VALVE ASM-SOLENOID
	120-8514	1	KIT-SEAL
2	200-4327	1	VALVE ASM-SOLENOID
	120-9051	1	KIT-SEAL
3	200-4329	1	VALVE ASM
	141-0888	1	KIT-SEAL
4	200-4375	1	ORIFICE
5	120-9048	2	VALVE-CHECK

[A] PART OF:
192-6350 CONTROL GP-PARKING BRAKE

00871963
PR: t05i29k58b0343

CONTROL GP-STEERING - 217-9779

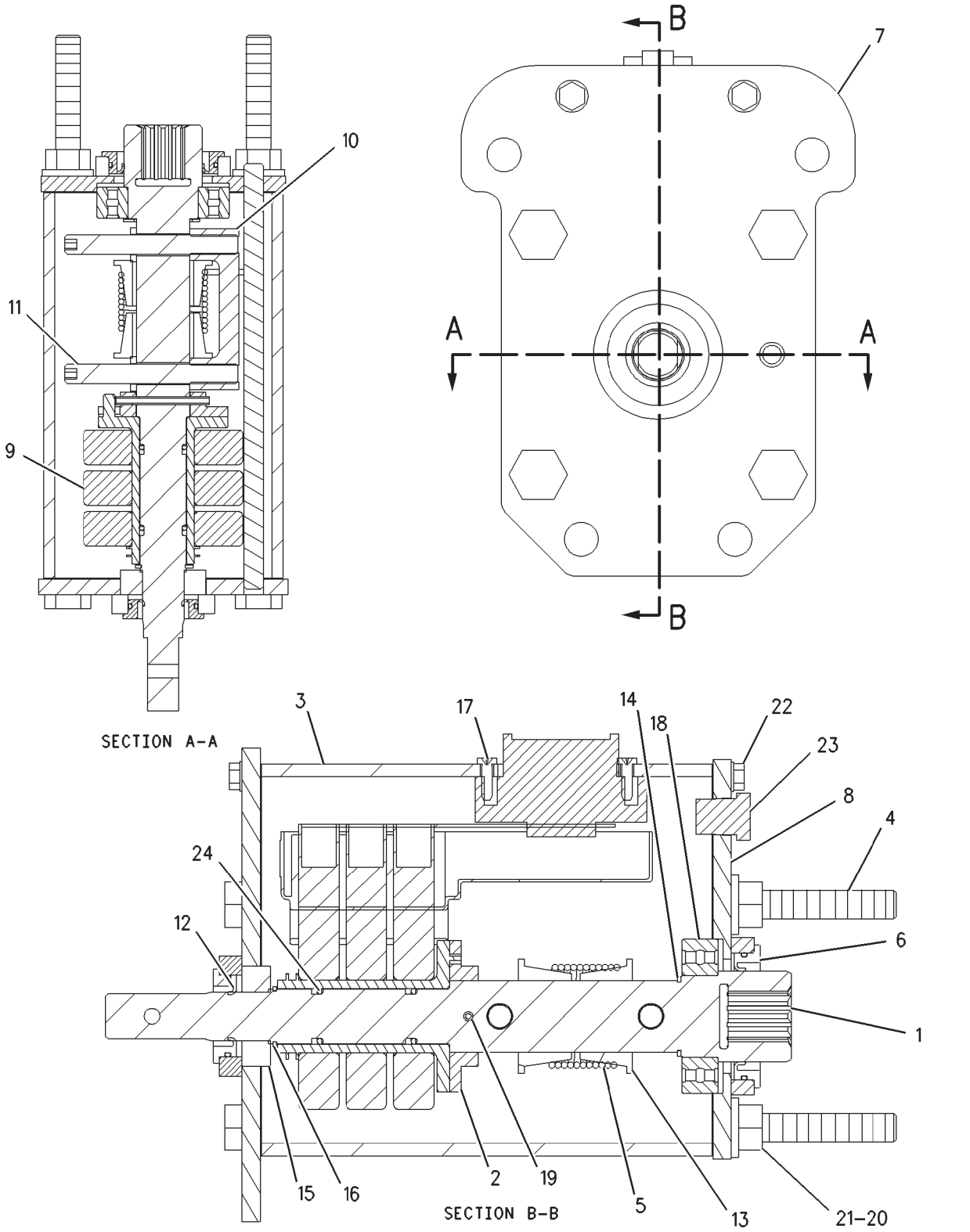

CONTROL GP-STEERING - 217-9779

ITEM	NUMBER	QTY	DESCRIPTION
-	217-9779	--	CONTROL GP-STEERING [A]
1	-----	1	SHAFT-STEERING
2	-----	1	COLLAR (ORDER COMPLETE AS)
3	-----	1	HOUSING (ORDER COMPLETE AS)
4	-----	4	STUD (ORDER COMPLETE AS)
5	-----	1	SPRING
6	-----	1	SEAL-LIP TYPE (ORDER COMPLETE AS)
7	-----	1	PLATE ASM (ORDER COMPLETE AS)
8	-----	1	PLATE ASM (ORDER COMPLETE AS)
9	-----	1	SENSOR GP-POSITION (ORDER COMPLETE AS)
10	-----	1	STOP
11	-----	2	STUD
12	-----	1	SEAL-LIP TYPE
13	-----	2	BUSHING
14	CH001-5600	1	RING-SNAP
15	-----	1	BALL BEARING (ORDER COMPLETE AS)
16	-----	1	RING-RETAINING
17	400835X1	2	SCREW-PAN HEAD (6-19X0.5 IN)
18	-----	1	BEARING (ORDER ITEM 15)
19	-----	1	PIN-SPRING
20	400287X1	4	WASHER-HARD (11X21X2.5)
21	WR522218	4	NUT (M10X1.5)
22		4	SCREW-MACHINE (M5X0.8X20MM)
23	CH8T-6765	1	PLUG-PIPE
24	-----	2	SEAL-O-RING

[A] PART OF 152-0420 WIRING GP-CAB

00882993
PR: t05i29k58b0344

CONTROL GP-STEERING (BASIC) - 217-9780

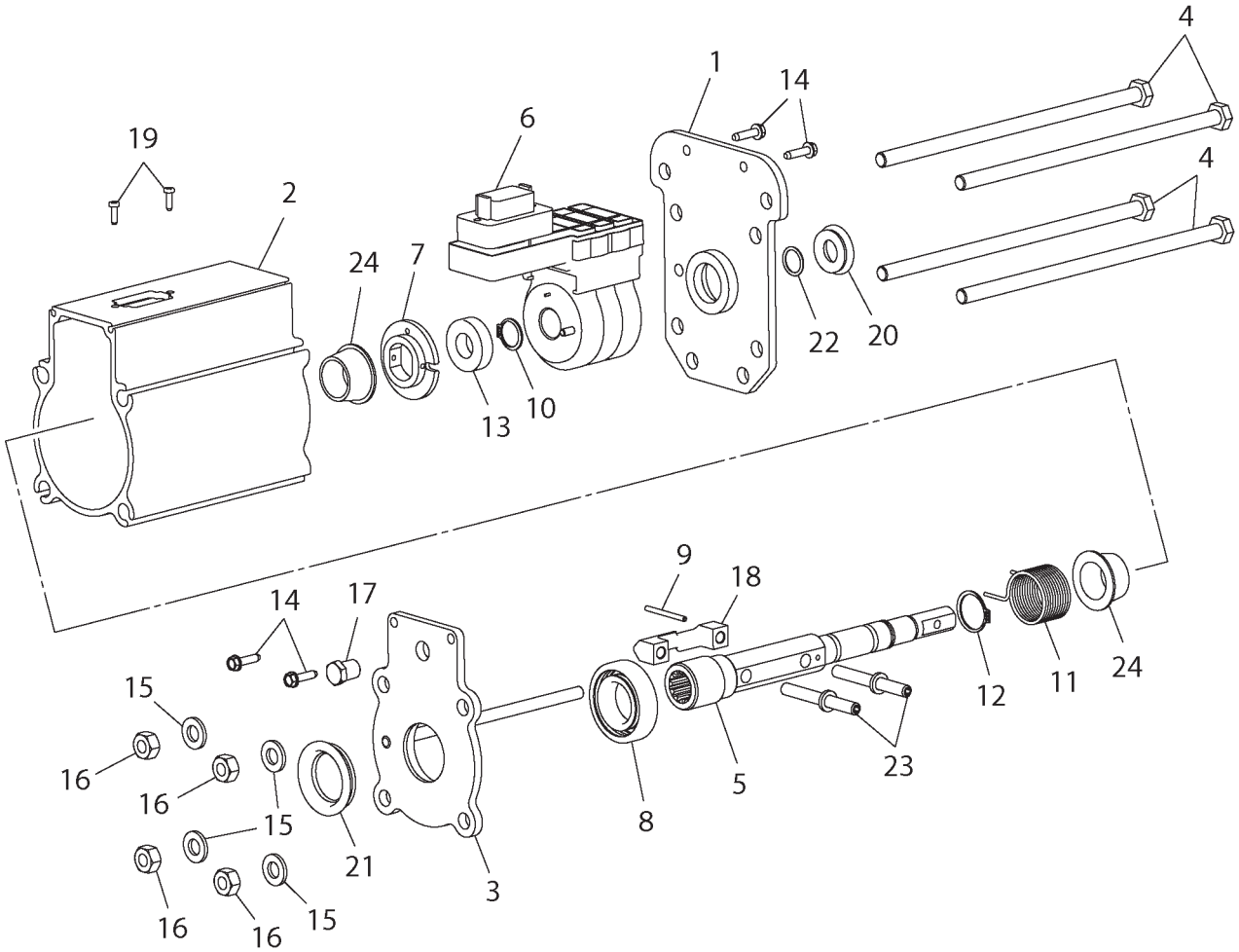

2179780A

CONTROL GP-STEERING (BASIC) - 217-9780

ITEM	NUMBER	QTY	DESCRIPTION
-	217-9780	--	CONTROL GP-STEERING (BASIC) [A]
1	217-9780	1	PLATE AS. (NOT SERVICED)
2	-----	1	HOUSING (NOT SERVICED)
3	-----	1	PLATE AS (NOT SERVICED)
4	-----	4	BOLT-STUD M10X1.5X229 ZN 10.9
5	-----	1	SHAFT-STEERING (NOT SERVICED)
6	-----	1	SENSOR-STEERING
7	-----	1	PIN-DRIVE (NOT SERVICED)
8	-----	1	BEARING-BALL 28.58 IDX53.98 OD
9	-----	1	PIN-SPG 3.2DIAX38.1
10	-----	1	RING-RETAINING EXT 17.5 IDX1.2
11	CH203-8550	1	SPRING-TORSION RH 3.66NM/TURN
12	CH001-5600	1	RING-RETAINING EXT 23.5 IDX1.1
13	-----	1	BEARING-BALL 17 IDX35 OD
14	-----	4	SCREW (NOT SERVICED)
15	400287X1	4	WASHER-HARD 11IDX21ODX2.5 ZND1
16	WR522218	4	NUT-M10-1.5,CL10.9,ZN,H,REG
17	CH8T-6765	1	PLUG-PIPE 1/4-18 ZN HHD
18	-----	1	STOP (NOT SERVICED)
19	400835X1	2	SCREW #6-19X12.7 R/B 400835X1
20	-----	1	SEAL-LIP 17SFT X 25.58 BORE
21	-----	1	SEAL-LIP 31.75 SHFTX44.45 BORE
22	-----	2	SEAL-O-RING (NOT SERVICED)
23	-----	2	BOLT-STUD M8X1.25X41.5 10.9
24	-----	2	BUSHING-TAPERED 35DIAX25.5ID

[A] PART OF 152-0005 WIRING GP

2179780A
PR: t05i29k58b0345

CONTROL GP-SECONDARY STEERING - 166-4623

EAME ONLY

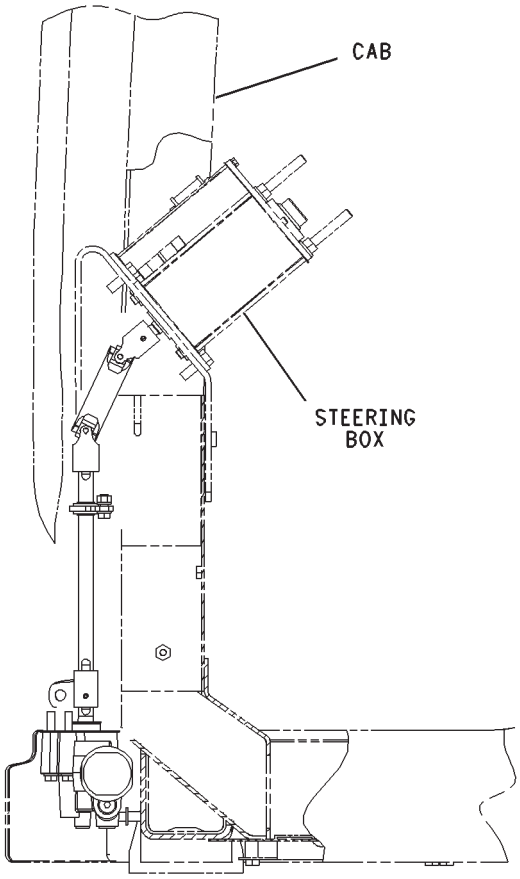

LEFT SIDE VIEW

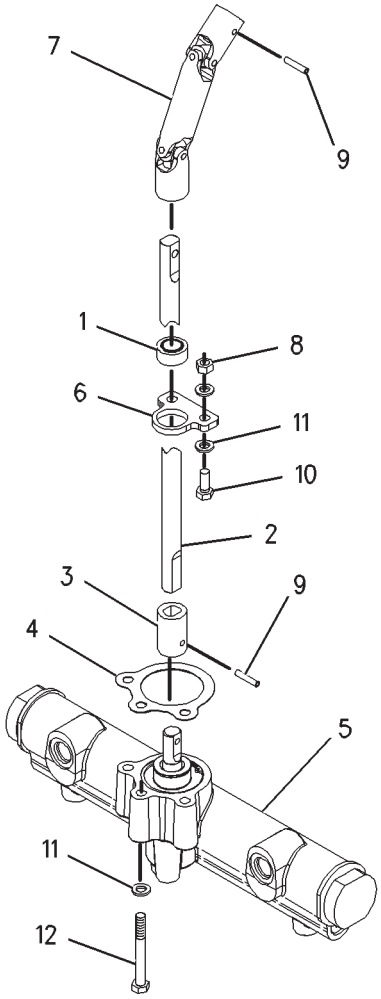

00811388

CONTROL GP-SECONDARY STEERING - 166-4623

EAME ONLY

ITEM	NUMBER	QTY	DESCRIPTION
-	166-4623	--	CONTROL GP-SECONDARY STEERING [A] (NOT SERVICED)
1	CH4D-2619	1	BEARING
2	197-2997	1	SHAFT
3	197-2998	1	COLLAR
4	197-2999	1	GASKET
5	197-3000	1	CONTROL GP-SECONDARY STEERING
6	201-8438	1	MOUNT
7	197-2996	1	JOINT AS
8	400340X1	2	NUT (M8X1.25 THD)
9	CH8T-0255	2	PIN-SPRING
10	400053X1	2	BOLT (M8X1.25X20MM)
11	400339X1	7	WASHER-HARD (8.8X16X2MM THK)
12	400068X1	3	BOLT (M8X1.25X70MM)

[A] PART OF 179-2180 BASE COMMON AR

00811388
PR: t05i29k58b0346

HEAD GP-PUMP - 205-6398

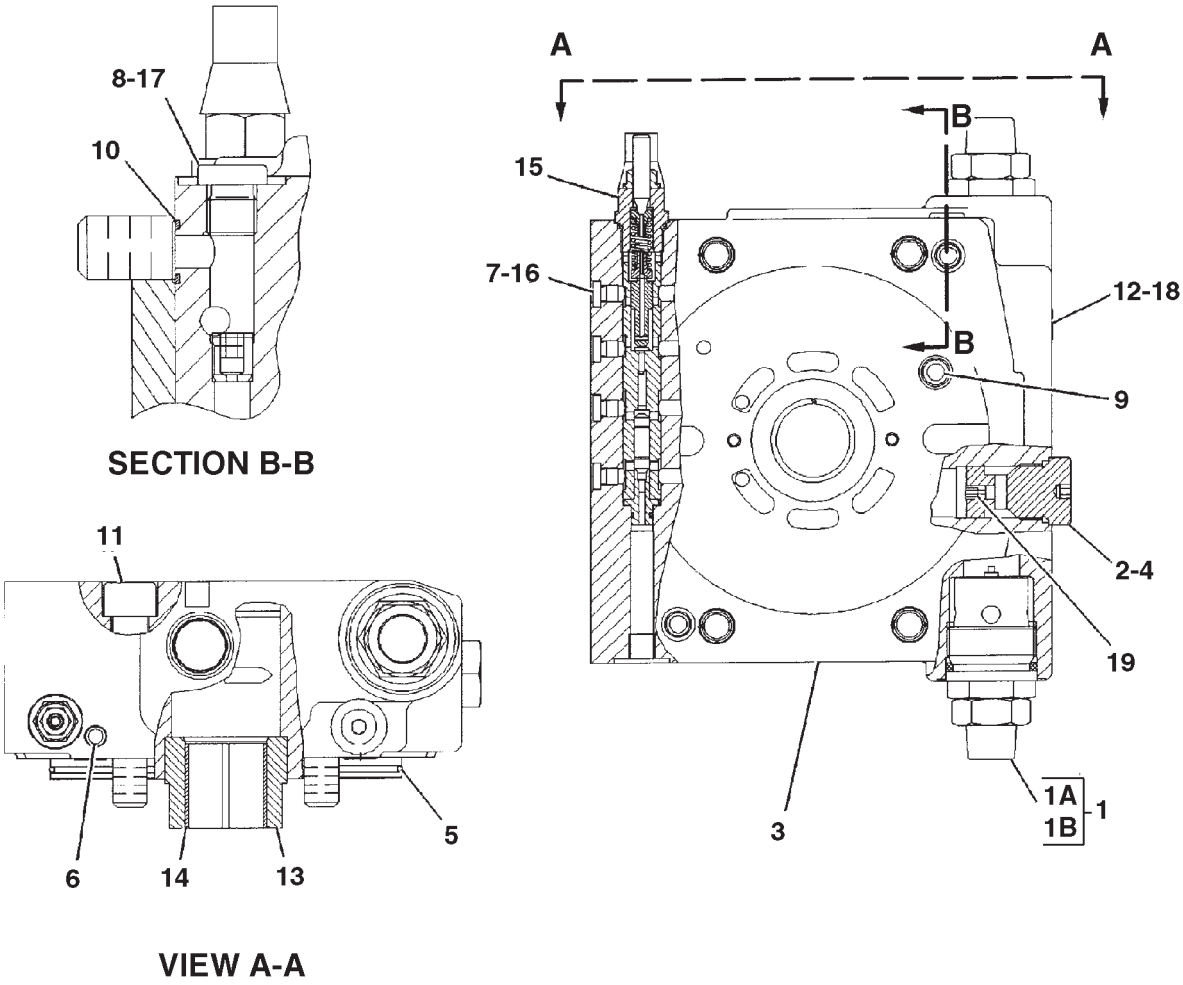

0853334A

HEAD GP-PUMP - 205-6398

ITEM	NUMBER	QTY	DESCRIPTION
-	205-6398	--	HEAD GP-PUMP [A]
1	CH178-4164	2	VALVE GP-RELIEF
			(SERVICE REPAIR ORDER 1A AND 1B)
1A	CH178-4171	1	SEAL KIT
1B	CH123-7556	1	CAP
2	CH144-9103	1	PLUG
3	CH205-6397	1	HEAD
4	CH6V-5326	1	SEAL-O-RING
5	CH119-7845	1	SEAL-O-RING
6	CH123-2017	1	PLUG
7	CH134-7489	4	PLUG (M8X1)
8	CH135-8854	1	PLUG
9	CH144-9101	1	PLUG-BREAK OFF
10	CH161-6149	2	SEAL-O-RING
11	CH3E-8008	4	BOLT-SOCKET HEAD (M16X2X90MM)
12	400361X1	2	SEAL-O-RING (8.92ID X 1.83DIA)
13	CH6E-4382	1	BUSHING
14	CH6E-4383	1	BUSHING
15	CH6E-4392	1	VALVE GP-PRESSURE COMPENSATOR
			(SEE BREAKDOWN FOR COMPONENTS)
16	CH6V-5586	4	SEAL-O-RING
17	CH6V-9028	1	SEAL-O-RING
18	CH9S-8002	2	PLUG
19	CH123-7583	1	ORIFICE (1.8MM)

[A] PART OF CH162-9592 PUMP GP-PISTON

0853334A
PR: t05i29k58b0347

MOTOR & MTG GP-STEERING - 158-2404

ROW & SPECIAL ONLY

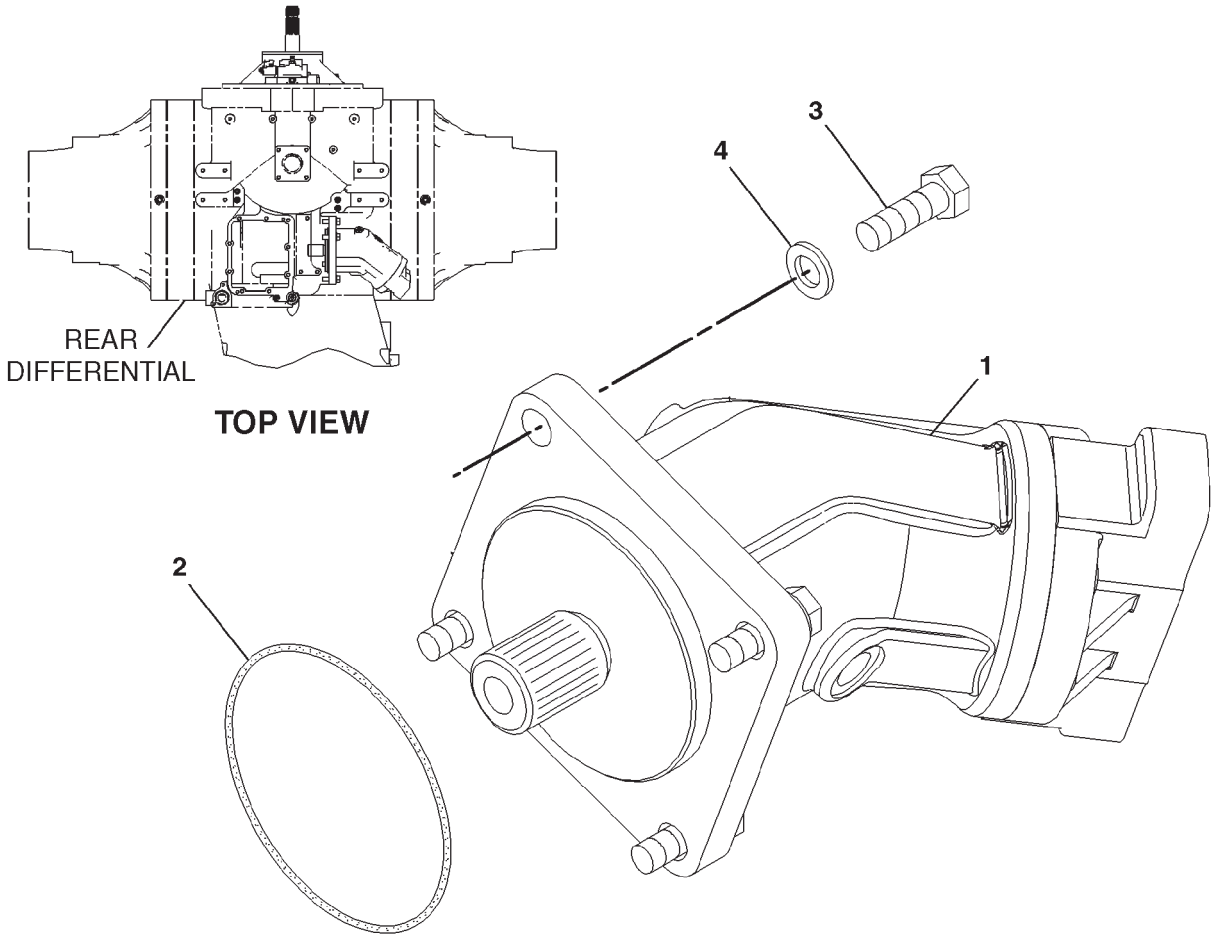

0901627A

MOTOR & MTG GP-STEERING - 158-2404

ROW & SPECIAL ONLY

ITEM	NUMBER	QTY	DESCRIPTION
-	158-2404	--	MOTOR & MTG GP STEERING [A] (NOT SERVICED)
1	CH162-9601	1	MOTOR GP-PISTON (STEERING) (SEE BREAKDOWN FOR COMPONENTS)
2	CH8F-8733	1	SEAL-O-RING
3	400056X1	4	BOLT (M16X2X50MM)
4	400082X1	4	WASHER (17.5X30X3.5)

[A] PART OF 177-9948; 183-2198
GAUGE AR-TRACK

0901627A
PR: t05i29k58b0348

MOTOR & MOUNTING GP - 172-4517

STEERING
EAME ONLY

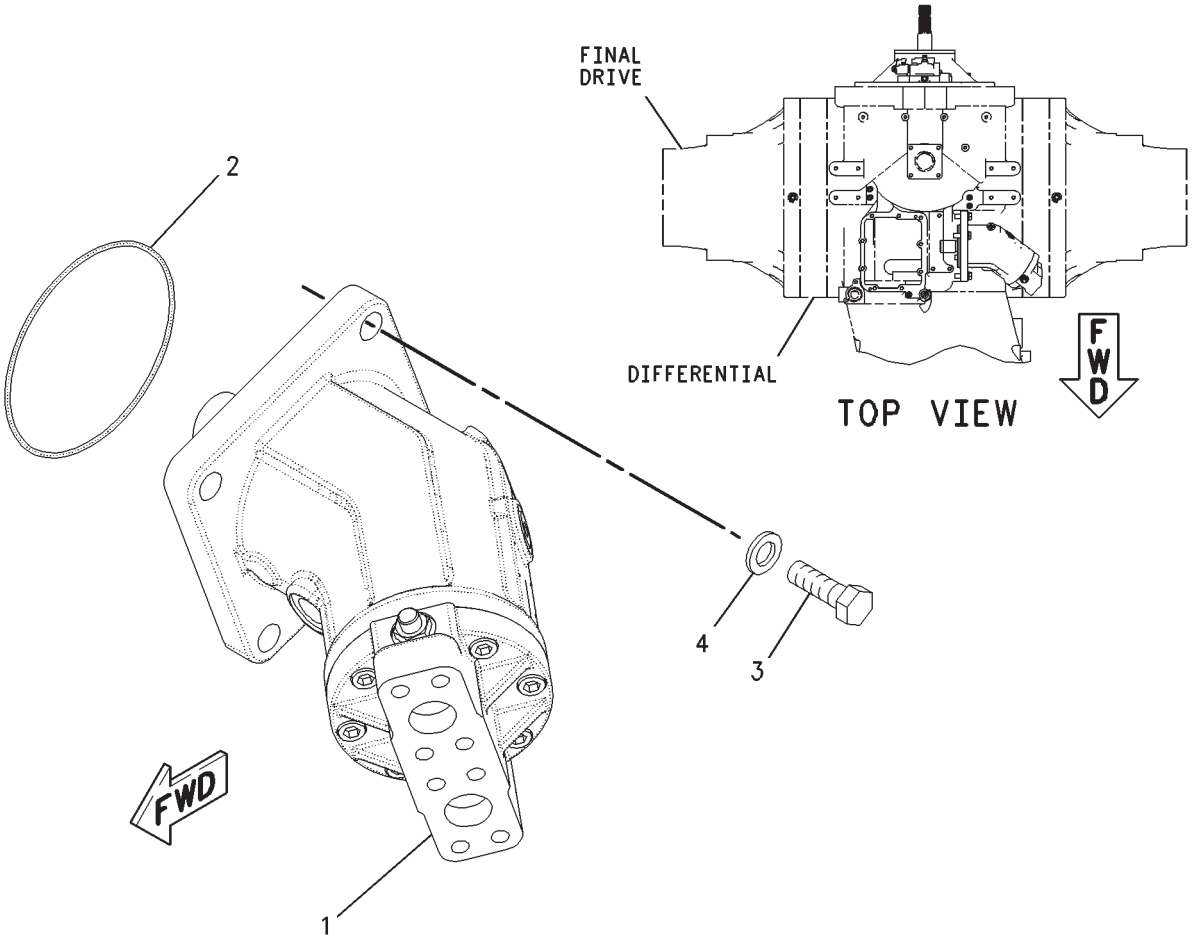

MOTOR & MOUNTING GP - 172-4517

STEERING
EAME ONLY

ITEM	NUMBER	QTY	DESCRIPTION
-	172-4517	--	MOTOR & MTG GP STEERING [A]
1	CH162-9602	1	MOTOR GP-PISTON (STEERING) (SEE BREAKDOWN FOR COMPONENTS)
2	CH8F-8733	1	SEAL-O-RING
3	400056X1	4	BOLT (M16X2X50MM)
4	400082X1	4	WASHER (17.5X30X3.5MM THK)

[A] PART OF:
177-9947; 183-2197 GAUGE AR-TRACK

00779015
PR: t05i29k58b0349

MOTOR GP-PISTON - CH162-9601
STEERING

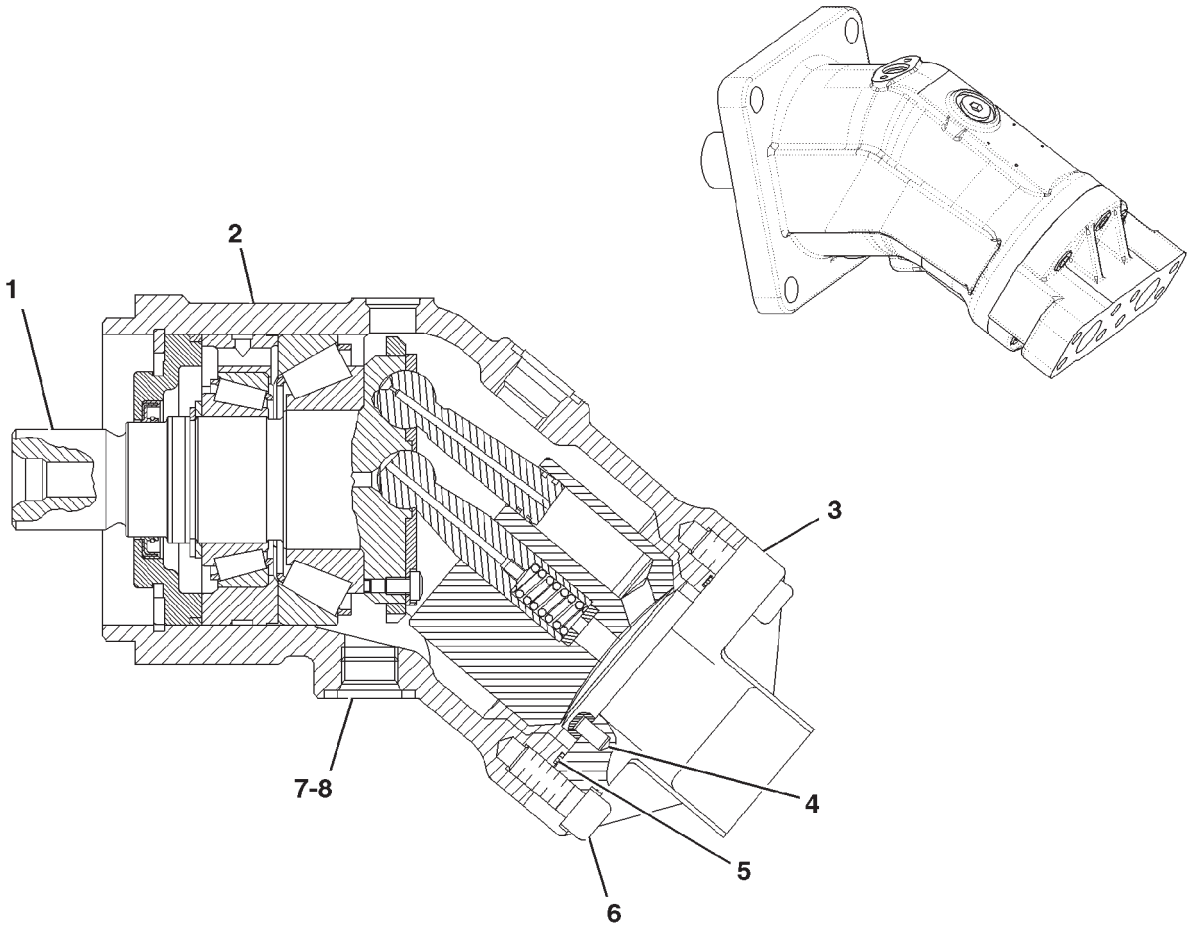

0829718A

MOTOR GP-PISTON - CH162-9601

STEERING

ITEM	NUMBER	QTY	DESCRIPTION
-	CH162-9601	--	MOTOR GP-PISTON [A]
1	203-0189	1	ROTATING GP-MOTOR (SEE BREAKDOWN FOR COMPONENTS)
2	-----	1	HOUSING (ORDER MOTOR GP-PISTON)
3	203-0190	1	HEAD
4	CH1G-3174	1	PIN
5	CH6V-1197	1	SEAL-O-RING
6	400220X1	6	BOLT-HEX SOCKET (M12X1.75X30MM)
7	400374X1	1	PLUG
8	400319X1	1	SEAL-O-RING (19.18IDX2.46DIA)

[A] PART OF 158-2404 MOTOR & MTG GP-STEERING

0829718A
PR: t05i29k58b0350

MOTOR GP-PISTON - CH162-9602
STEERING

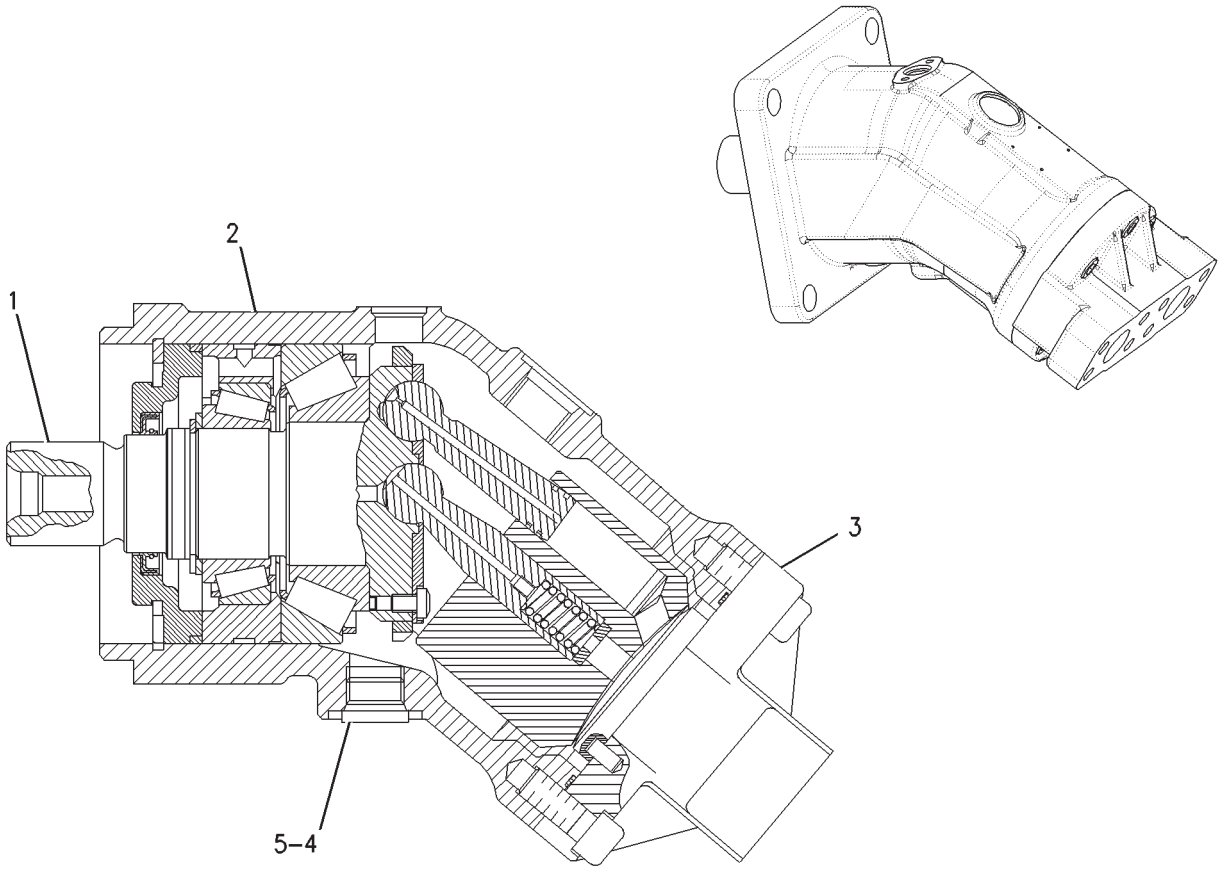

MOTOR GP-PISTON - CH162-9602

STEERING

ITEM	NUMBER	QTY	DESCRIPTION
-	CH162-9602	--	MOTOR GP-PISTON [A]
1	203-0189	1	ROTATING GP-MOTOR (SEE BREAKDOWN FOR COMPONENTS)
2	-----	1	HOUSING (ORDER MOTOR GP-PISTON)
3	203-1213	1	HEAD (SEE BREAKDOWN FOR COMPONENTS)
4	400374X1	1	PLUG (10STOR)
5	400319X1	1	SEAL-O-RING (19.18IDX2.46DIA)

[A] PART OF 172-4517 MOTOR & MTG GP

00850707
PR: t05i29k58b0351

ROTATING GP-MOTOR - 203-0189
STEERING

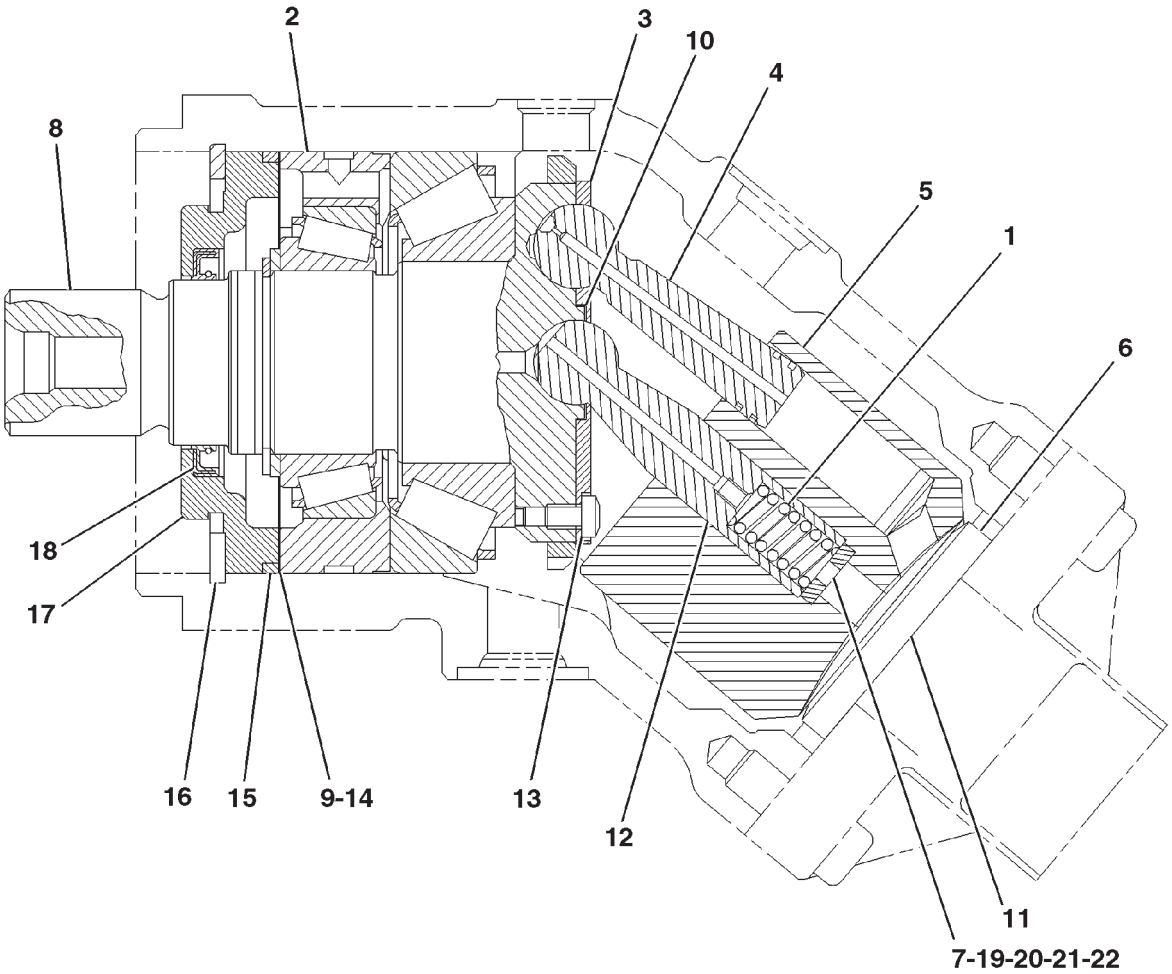

0829761A

ROTATING GP-MOTOR - 203-0189

STEERING

ITEM	NUMBER	QTY	DESCRIPTION
-	203-0189	--	ROTATING GP-MOTOR [A]
1	CH171-3061	1	SPRING
2	CH171-5989	1	KIT-BEARING [R]
3	CH9T-1642	1	PLATE-RETAINING
4	CH165-6969	7	PISTON ASM
	CH9T-1582	2	RING
5	CH9T-1687	1	BARREL-CYLINDER
6	203-0341	1	VALVE GP-FLUSHING (HYD STEERING) A
6A	203-3167	1	PLATE
6B	203-3168	1	PIN
6C	CH119-6110	2	RETAINER
6D	CH6E-4102	2	SPRING
6E	CH203-3169	2	PIN
7	CH171-3060	1	SHIM (3.6mm)
8	202-2792	1	SHAFT ASM-MOTOR
9	CH9T-1579	1	SHIM (0.3)
10	CH9T-1643	1	DISC-RETAINING
11	CH203-0343	1	WASHER
12	CH171-3054	1	PIN-CENTER
13	CH113-4420	7	SCREW (M6X20MM)
14	CH9T-1576	2	SHIM (0.1)
15	CH5D-5958	1	SEAL-O-RING
16	CH6V-3326	1	RING-RETAINING
17	CH9T-1637	1	COVER-FRONT
18	CH123-5748	1	SEAL-SHAFT
19	CH171-3059	1	SHIM (3.7mm)
20	CH171-3058		SHIM (3.8mm)
21	CH171-3057	1	SHIM (3.9mm)
22	CH171-3055	1	SHIM (4.0mm)

[A] PART OF CH162-9601 & CH162-9602
MOTOR GP-PISTON
[R] REPLACE COMPLETE

0829761A
PR: t05i29k58b0352

HEAD GP-MOTOR - 203-1213

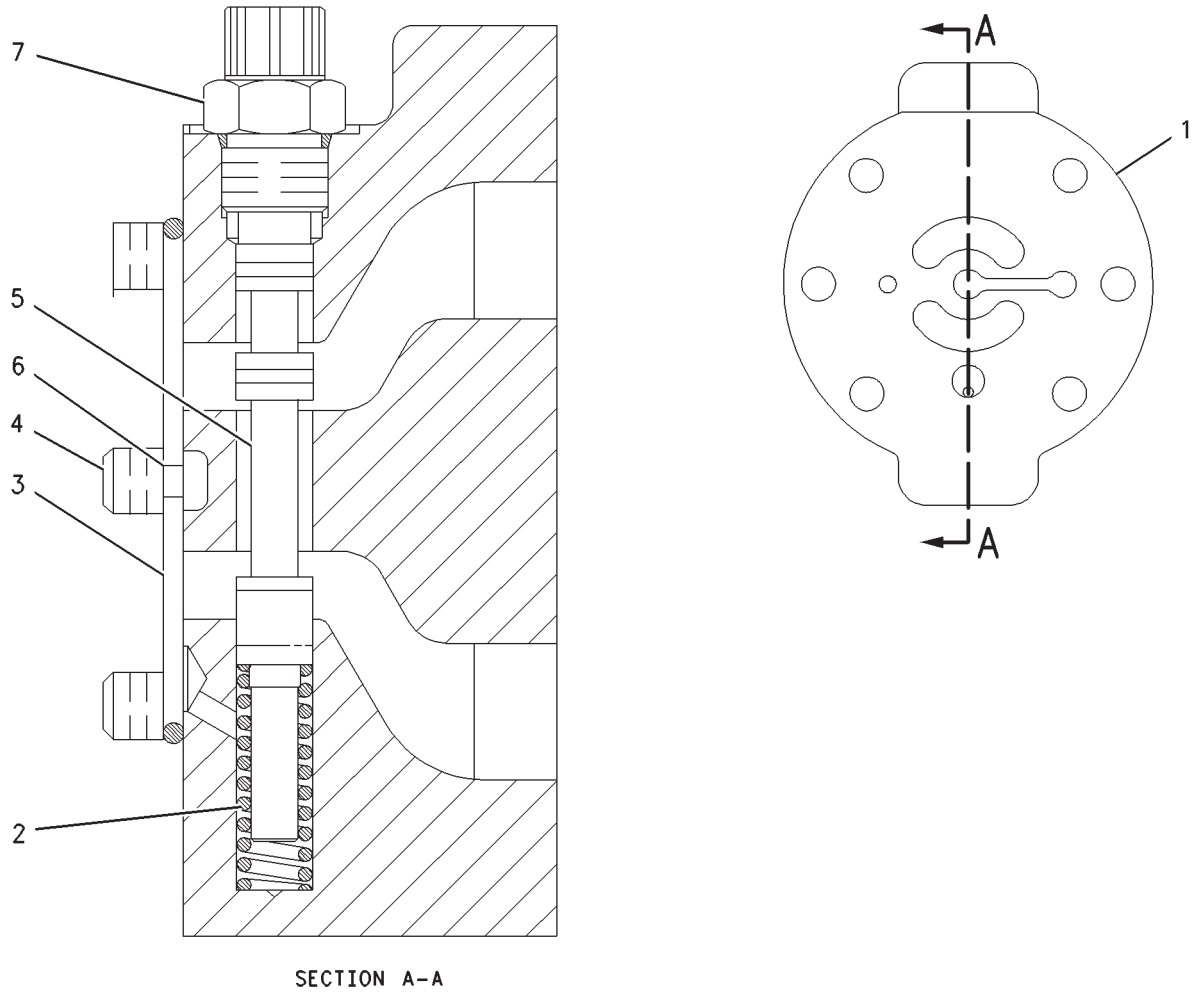

00852712

HEAD GP-MOTOR - 203-1213

ITEM	NUMBER	QTY	DESCRIPTION
-	203-1213	--	HEAD GP-MOTOR
1	203-1207	1	HEAD
2	CH166-7413	1	SPRING
3	CH6V-1197	1	SEAL-O-RING
4	400220X1	6	BOLT-HEX SOCKET (M12X1.75X30MM)
5	203-1210	1	SPOOL
6	CH1G-3174	1	PIN
7	CH166-7414	1	FITTING

[A] PART OF 162-9602 MOTOR GP-PISTON

00852712
PR: t05i29k58b0353

ACTUATOR GP-PISTON PUMP - CH183-8430

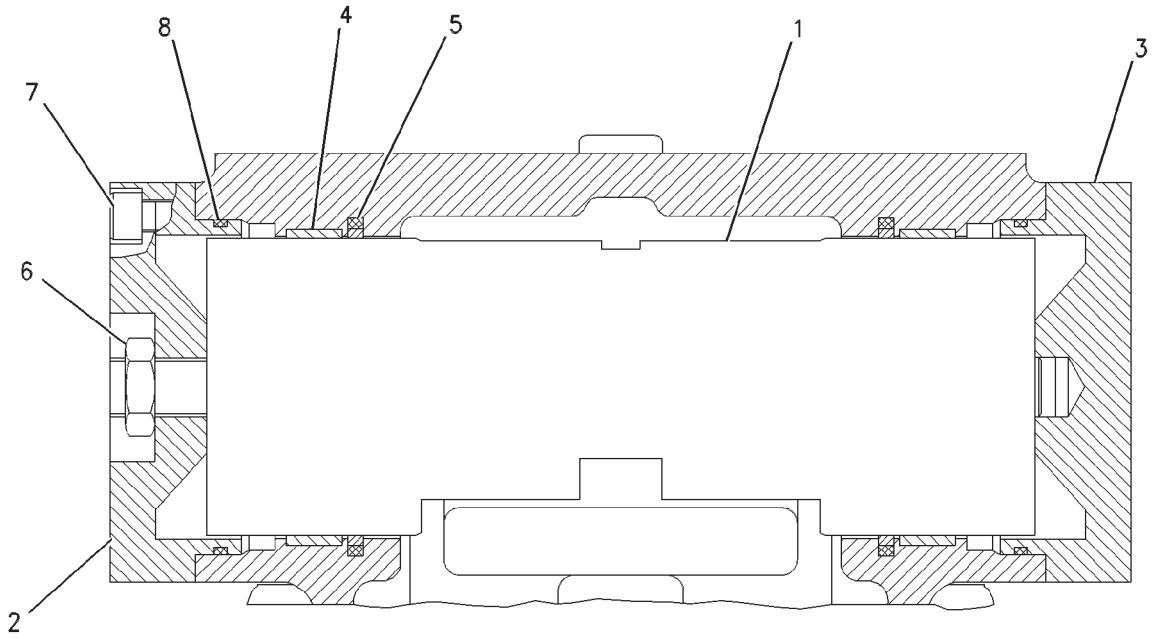

00664406

ACTUATOR GP-PISTON PUMP - CH183-8430

ITEM	NUMBER	QTY	DESCRIPTION
-	CH183-8430	--	ACTUATOR GP-PISTON PUMP [A]
1	CH183-8417	1	VALVE GP-SERVO (SEE BREAKDOWN FOR COMPONENTS)
2	CH183-8431	1	COVER
3	CH183-8442	1	COVER
4	CH183-8443	2	RING-WEAR
5	CH183-8444	2	RING-SEAL
6	CH119-0942	1	NUT
7	400151X1	8	BOLT-SOCKET HEAD (M8X1.25X25MM)
8	CH8C-3089	2	SEAL-O-RING (82.22MM ID)

[A] PART OF CH162-9592 PUMP GP-PISTON

00664406
PR: t05i29k58b0354

HYDRAULIC KIT-POWER BEYOND - 178-7162

STD FLOW (0-60 LPM) .5" COUPLER
ROW AND SPECIAL APPLICATIONS

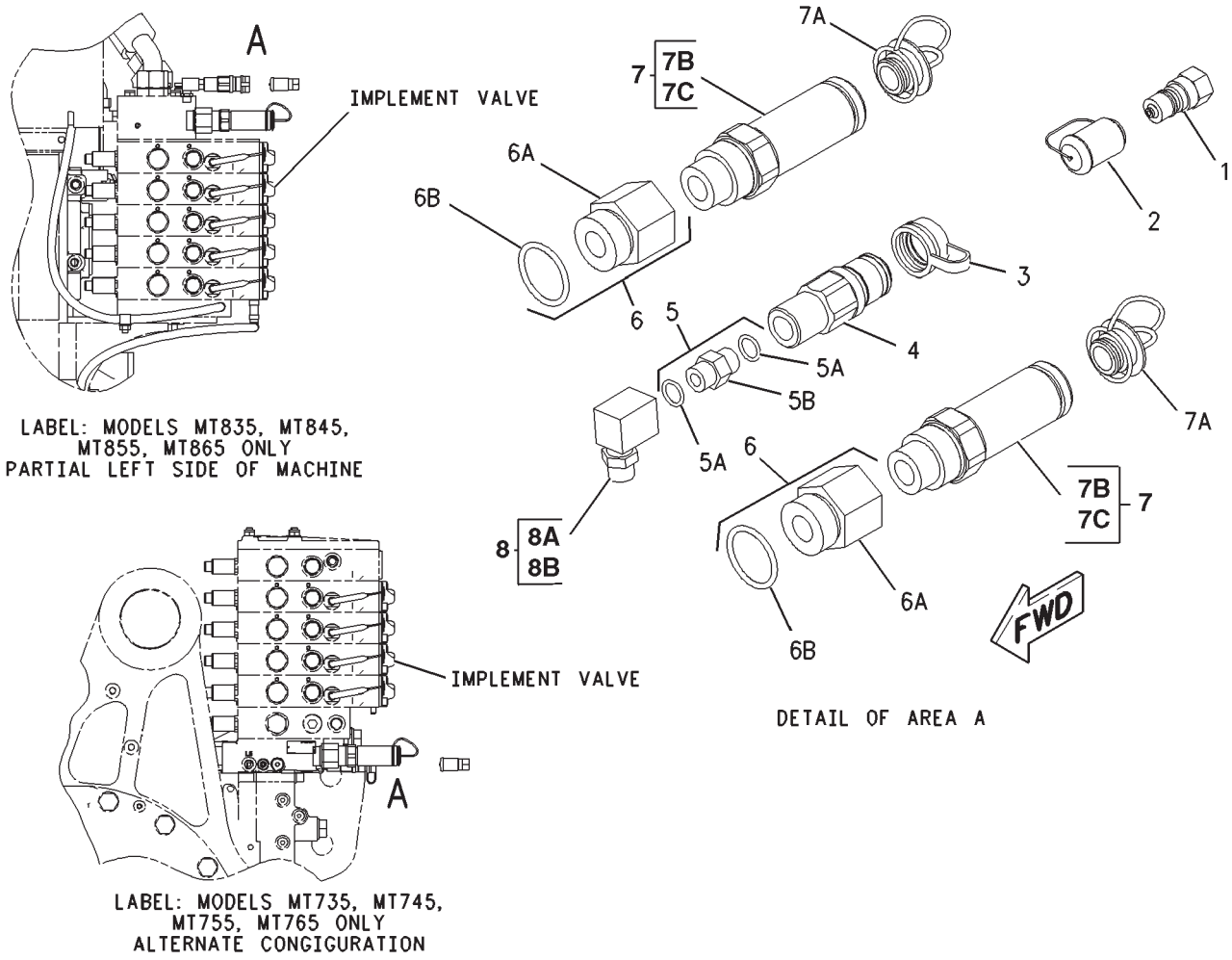

HYDRAULIC KIT-POWER BEYOND - 178-7162

STD FLOW (0-60 LPM) .5" COUPLER ROW AND SPECIAL APPLICATIONS

ITEM	NUMBER	QTY	DESCRIPTION
-	178-7162	--	CONNECTOR GP-VALVE
1	CH153-4061	1	FITTING
-	CH153-4058	1	COUPLING (NOT SHOWN) [A]
2	CH153-6225	1	CAP-DUST
3	CH159-5893	1	CAP-DUST
4	CH159-5897	1	COUPLER AS
5	CH170-0964	1	CONNECTOR AS (6STOR X 6STOR)
5A	400318X1	2	SEAL-O-RING (11.89DIA X 1.98)
5B	-----	1	CONNECTOR (ORDER ITEM 5)
6	CH172-4621	2	ADAPTER AS (16STOR X 12STOR)
6A	-----	1	ADAPTER-STR (ORDER ITEM 6)
6B	400376X1	1	SEAL-O-RING (29.74ID X 2.95DIA)
7	CH183-3725	2	COUPLER ASM
7A	CH168-4599	1	CAP-DUST
7B	CH5L-4758	1	SEAL-O-RING
7C	CH201-7615	1	RING-BACKUP
-	CH159-5898	1	NIPPLE ASM (NOT SHOWN) [B]
8	CH150-3065	1	ADAPTER AS-90DEG (6STORX6STOR) [C]
8A	400318X1	1	SEAL-O-RING (11.89ID X 1.98)
8B	-----	1	ADAPTER (ORDER ITEM 8)

[A] MATING PART FOR ITEM 1
[B] MATING PART FOR ITEM 7
[C] PART REQ'D FOR MODELS
MT835, MT845, MT855, MT865 ONLY

00885028
PR: t05i29k58b0355

CONNECTOR GP-VALVE - 180-7174

ABOVE 60 LPM HYDRAULIC POWER BEYOND ROW AND SPECIAL APPLICATIONS

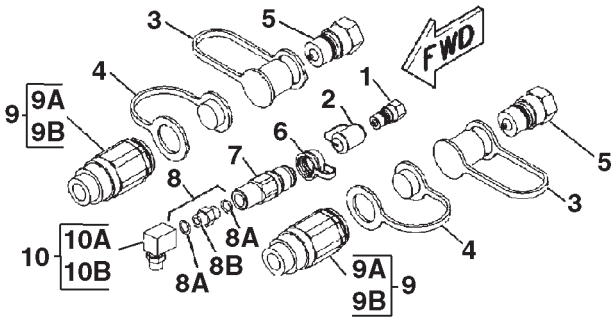

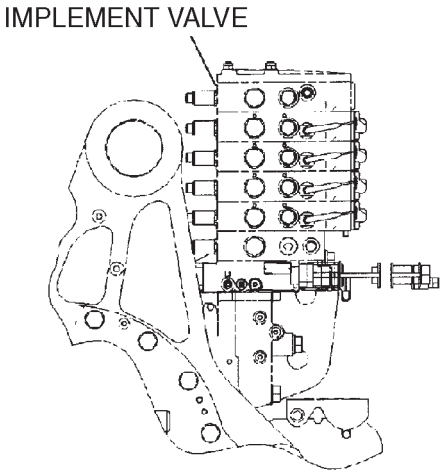

RIGHT SIDE VIEW

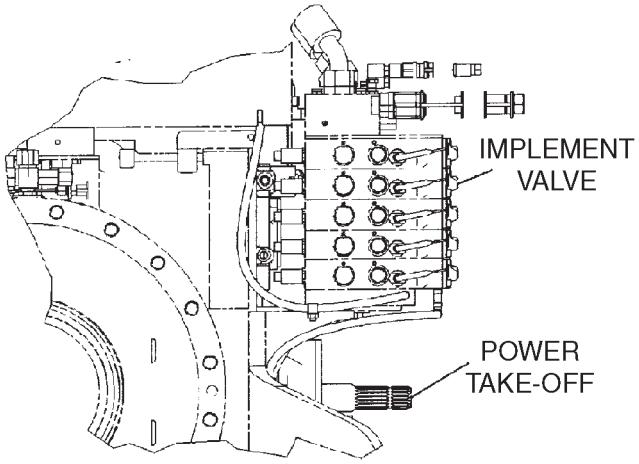

LEFT SIDE VIEW

0824172A

CONNECTOR GP-VALVE - 180-7174

ABOVE 60 LPM HYDRAULIC POWER BEYOND ROW AND SPECIAL APPLICATIONS

ITEM	NUMBER	QTY	DESCRIPTION
-	180-7174	--	CONNECTOR GP-VALVE
1	CH153-4061	1	FITTING
2	CH153-6225	1	CAP-DUST
3	CH153-6227	2	CAP-DUST
4	CH153-6228	2	PLUG-DUST [A]
5	CH159-5890	2	FITTING ASM (INCLUDES COUPLING & CAP)
	CH153-6227	1	CAP-DUST
6	CH159-5893	1	CAP-DUST
7	CH159-5897	1	COUPLER
8	CH170-0964	1	CONNECTOR AS (6STORX6STOR)
8A	400318X1	2	SEAL-O-RING (11.89IDX1.98DIA)
8B	-----	1	CONNECTOR (ORDER ITEM 8)
9	CH183-3724	2	COUPLER AS
9A	CH2K-8199	1	SEAL-O-RING
9B	CH201-7614	1	RING-BACKUP
-	CH5R-6305	1	NIPPLE ASM (NOT SHOWN) [B]
10	CH150-3065	1	ADAPTER AS (90DEG-6STOR X 6STOR) [C]
10A	400318X1	1	SEAL-O-RING (11.89IDX1.98DIA)
10B	-----	1	ADAPTER (ORDER ITEM 10)

[A] DUST PROTECTION
[B] MATING PART
[C] PARTS FOR MT800 SERIES ONLY

0824172A
PR: t05i29k58b0356

CONVERSION GP-CONTROL VALVE - 185-8699

4 VALVE TO 5 VALVE UPGRADE

NO ILLUSTRATION

NOTIF

CONVERSION GP-CONTROL VALVE - 185-8699

4 VALVE TO 5 VALVE UPGRADE

ITEM	NUMBER	QTY	DESCRIPTION
-	185-8699	--	CONVERSION GP-CONTROL VALVE
	136-5670	1	CONTROL & WIRING GP (NOT SERVICED) (SEE BREAKDOWN FOR COMPONENTS)
	136-5355	1	CONTROL GP-IMPLEMENT (NOT SERVICED) (SEE BREAKDOWN FOR COMPONENTS)
	189-5910	1	CONVERSION GP-CONTROL VALVE (FOUR TO FIVE BANK VALVE) (SEE BREAKDOWN FOR COMPONENTS)

NOTIF
PR: t05i29k58b0357

CONVERSION GP-CONTROL VALVE - 185-8701

NO ILLUSTRATION

NOTIF

CONVERSION GP-CONTROL VALVE - 185-8701

ITEM	NUMBER	QTY	DESCRIPTION
-	185-8701	--	CONVERSION GP-CONTROL VALVE [A]
	152-0448	1	CONTROL GP-IMPLEMENT (NOT SERVICED) (SEE BREAKDOWN FOR COMPONENTS)
	189-5906	1	CONVERSION GP-CONTROL VALVE (FIVE TO SIX BANK VALVE) (SEE BREAKDOWN FOR COMPONENTS)

[A] 5 VALVE TO 6 VALVE UPGRADE

NOTIF
PR: t05i29k58b0358

CONVERSION GP-CONTROL VALVE - 189-5910

4 VALVE TO 5 VALVE UPGRADE

NO ILLUSTRATION

NOTIF

CONVERSION GP-CONTROL VALVE - 189-5910

4 VALVE TO 5 VALVE UPGRADE

ITEM	NUMBER	QTY	DESCRIPTION
-	189-5910	--	CONVERSION GP-CONTROL VALVE [A]
	180-0498	1	VALVE GP-CONTROL (SEE BREAKDOWN FOR COMPONENTS)
	WR522218	4	NUT (M10X1.5)
	CH5P-9186	14	SEAL-O-RING
	CH8L-2777	4	SEAL-O-RING
	209-7497	4	STUD

[A] PART OF 185-8699 CONV GP-CONTROL VALVE

NOTE:
QUANTITIES SHOWN ON SEAL-O-RING REFLECT REPLACEMENT SEALS FOR THE VALVE SECTION IMMEDIATELY BELOW THE TOP PLATE AMD DUPLICATE SEALS FOR THOSE PRESENT IN THE ADDITIONAL VALVE GP

THIS KIT CONVERTS A FOUR (4) REMOTE VALVE NONSTEERABE HITCH VALVE STACK TO FIVE (5) REMOTE VALVE NONSTEETABEL HITCH VALVE STOCK.

NOTIF
PR: t05i29k58b0359

CONVERSION GP-CONTROL VALVE - 189-5906

5 VALVE TO 6 VALVE UPGRADE

NO ILLUSTRATION

NOTIF

CONVERSION GP-CONTROL VALVE - 189-5906

5 VALVE TO 6 VALVE UPGRADE

ITEM	NUMBER	QTY	DESCRIPTION
-	189-5906	--	CONVERSION GP-CONTROL VALVE [A]
1	162-9816	1	VALVE GP-CONTROL (SEE BREAKDOWN FOR COMPONENTS)
2	WR522218	4	NUT (M10X1.5)
3	CH5P-9186	14	SEAL-O-RING [J]
4	CH8L-2777	4	SEAL-O-RING [J]
5	CH209-7498	4	STUD

[A] PART OF 185-8701 CONVERSION GP-CONTROL VALVE
[J] QUANTITIES SHOWN REFLECT REPLACEMENT SEALS FOR THE VALVE SECTION IMMEDIATELY BELOW THE TOP PLATE AND DUPLICATE SEALS FOR THOSE PRESENT IN THE ADDITIONAL VALVE GP.

NOTIF
PR: t05i29k58b0360

KIT-COUPLING-POWER BEYOND - 189-3143
(CLAAS)
EAME ONLY

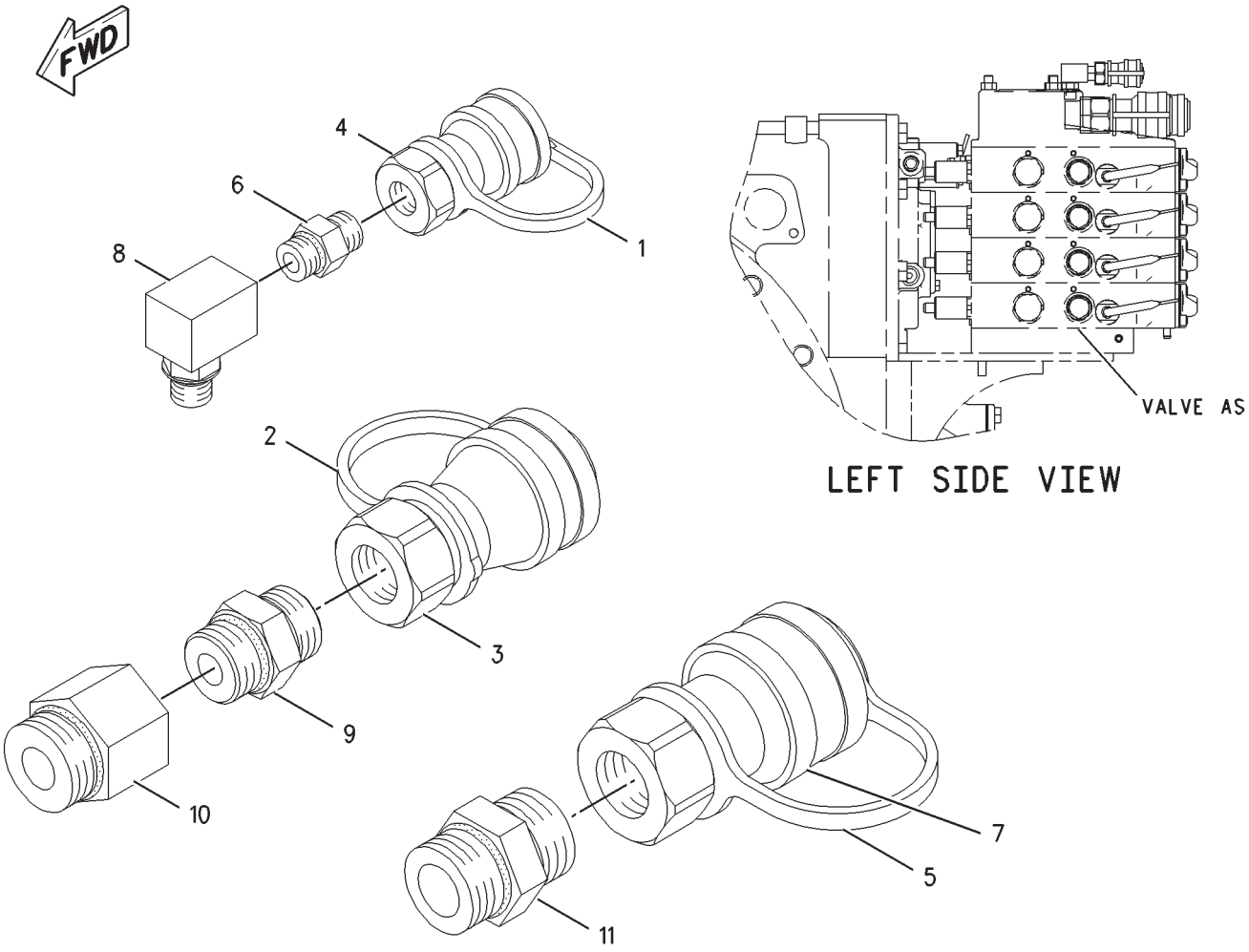

KIT-COUPLING-POWER BEYOND - 189-3143

(CLAAS)
EAME ONLY

ITEM	NUMBER	QTY	DESCRIPTION
-	189-3143	--	KIT-COUPLING-POWER BEYOND
1	CH5R-5676	1	PLUG-DUST
2	CH5R-5718	1	PLUG-DUST
3	CH5R-6304	1	COUPLER-QUICK CONNECT (12STOR-FEM)
	CH3S-9233	1	SEAL-O-RING
	CH5R-5780	1	RETAINER
4	CH5R-6868	1	COUPLER-QUICK CONNECT (6STOR-FEM)
5	CH165-5694	1	PLUG-DUST
6	CH170-0964	1	CONNECTOR AS (6STOR X 6STOR)
	400318X1	2	SEAL-O-RING (11.89ID X 1.98 DIA)
7	CH173-7639	1	COUPLER-QUICK CONNECT (16STOR-FEM)
	CH191-6944	1	KIT-SEAL (COUPLING AS)
8	CH150-3065	1	ADAPTER AS (90DEG-6STOR X 6STOR)
	400318X1	1	SEAL-O-RING (11.89ID X 1.98 DIA)
9	CH172-4620	1	CONNECTOR AS (12STOR HEX)
	400416X1	2	SEAL-O-RING (23.47IDX2.95DIA)
10	CH172-4621	1	ADAPTER AS (16STOR X 12STOR)
	400376X1	2	SEAL-O-RING (29.74ID X 2.95DIA)
11	CH172-4622	1	UNION AS (16STOR HEX)
	400376X1	2	SEAL-O-RING (29.74ID X 2.95DIA)

00893843
PR: t05i29k58b0361

CYLINDER GP-LIFT

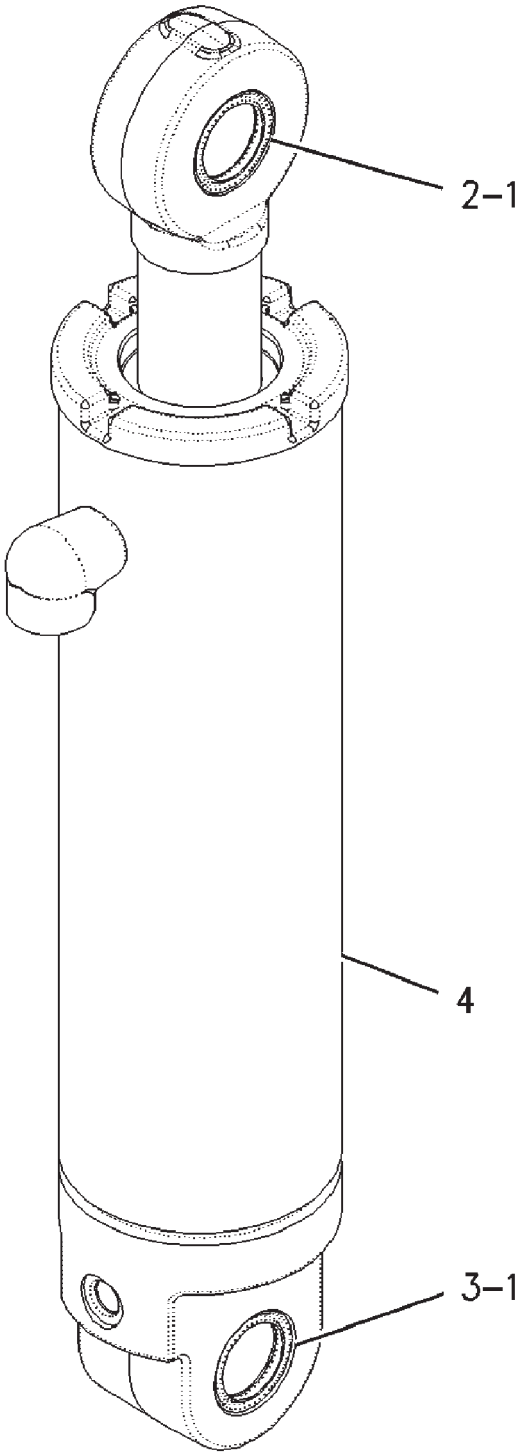

00852391

ITEM	NUMBER	QTY	DESCRIPTION
-	CH192-6280	--	CYLINDER GP-LIFT (W/BRGS & SEALS) [A]
1	400311X1	4	SEAL-LIP
2	CH190-2623	1	BEARING
3	CH196-3024	1	BEARING
4	CH198-8789	1	CYLINDER GP (0125-0345-Y) (NOT SERVICED, ORDER CYLINDER GP-W/BRGS & SEALS) (SEE BREAKDOWN FOR COMPONENTS)

[A] PART OF: 169-0027;169-0028;
179-0852;180-6639;186-0979 &
189-3300 HITCH AR-3 POINT

00852391
PR: t05i29k58b0362

CYLINDER GP (0125-0345-Y)

125MM X 345MM (4.92 X 13.58")

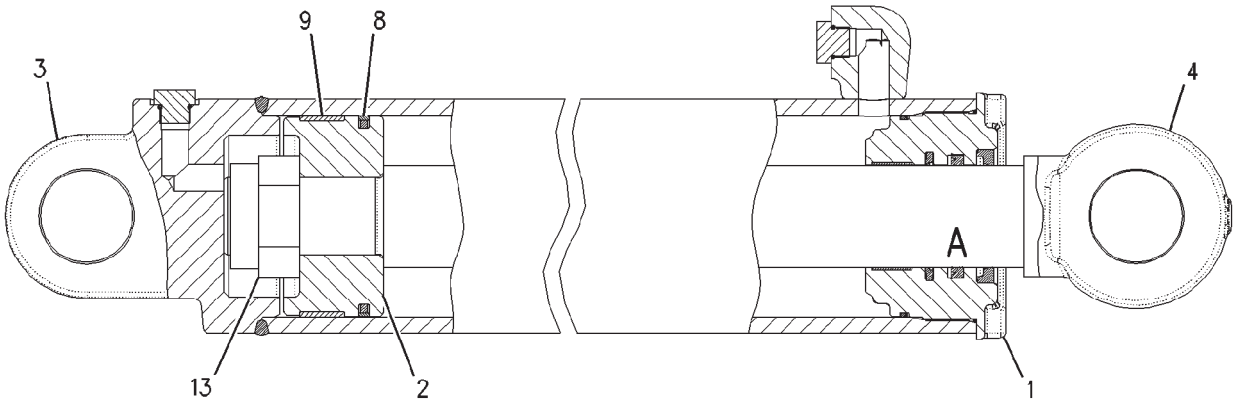

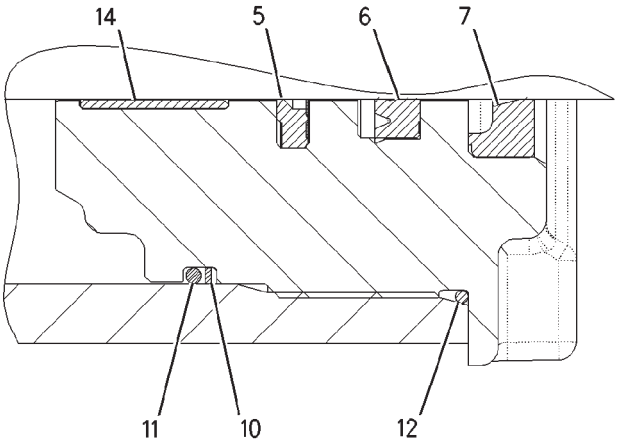

VIEW OF AREA A

CYLINDER GP (0125-0345-Y)

125MM X 345MM (4.92 X 13.58")

ITEM	NUMBER	QTY	DESCRIPTION
-	CH198-8789	--	CYLINDER GP [A] (NOT SERVICED) (ORDER CYLINDER GP-LIFT CH192-6280)
1	-----	1	HEAD
2	-----	1	PISTON
3	-----	1	BODY
4	-----	1	ROD ASM
5	CH167-2201	1	SEAL ASM-BUFFER
6	CH167-2312	1	SEAL-U-CUP
7	500686D1	1	SEAL-WIPER (DOUBLE LIP)
8	CH186-4955	1	SEAL-PISTON
9	CH186-5137	1	RING-WEAR
10	CH2J-3961	1	RING-BACKUP
11	CH2J-8163	1	SEAL-O-RING (117.07X3.53)
12	CH5F-3999	1	SEAL-O-RING (123.42X3.53)
13	-----	1	NUT-SELF LOCKING
14	CH8T-0785	1	RING-WEAR

[A] PART OF CH192-6280 CYLINDER GP-LIFT

00852903
PR: t05i29k58b0363

FILTER & MTG GP-HYDRAULIC - 158-2349

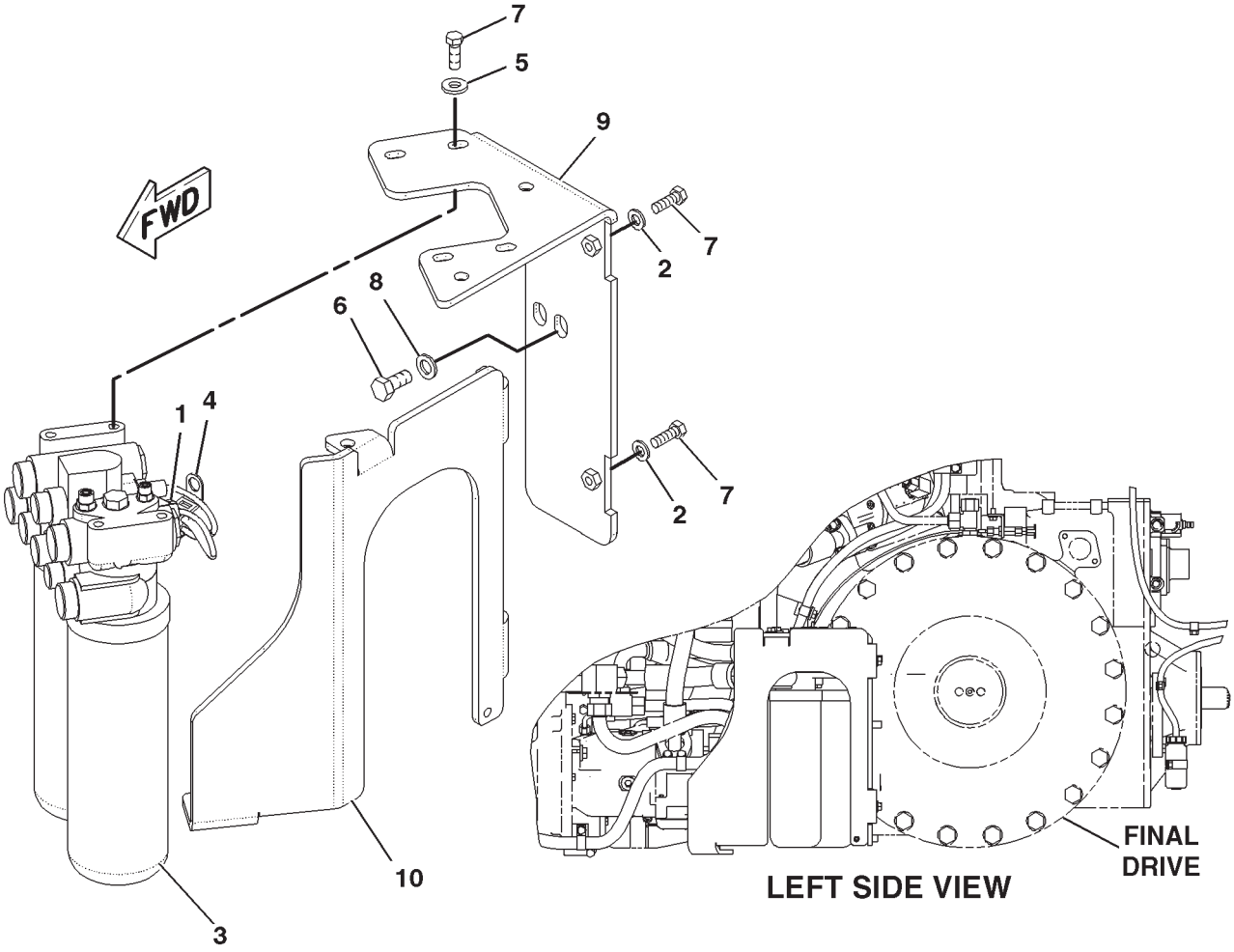

0895667A

FILTER & MTG GP-HYDRAULIC - 158-2349

ITEM	NUMBER	QTY	DESCRIPTION
-	158-2349	--	FILTER & MTG GP-HYD [A] (NOT SERVICED)
1	CH7K-1181	1	STRAP-CABLE
2	400357X1	2	WASHER-HARD (M12X25.5X3)
3	210-2395	--	FILTER GP-OIL (HYDRAULIC) (S/N: PRIOR BAM40601;BBP40472;BCC40702;BDS40823) (NLA ORDER EFF. FILTER GP-OIL)
3	501767D1	1	FILTER GP-OIL (HYDRAULIC) (S/N: EFF BAM40601;BBP40472;BCC40702;BDS40823) (TRANS/STEERING/IMPLEMENT) (SEE BREAKDOWN FOR COMPONENTS)
4	400380X1	1	CLIP
5	400381X1	4	WASHER-HARD (13.5X30X4)
6	WR518357	4	BOLT (M16X2X35MM)
7	400064X1	6	BOLT (M12X1.75X35MM)
8	400082X1	4	WASHER (17.5X30X3.5)
9	222-9854	1	PLATE ASM
	CH8T-3597	5	NUT-WELD (M12X1.75)
10	222-9855	1	PLATE ASM
	CH8T-3612	1	NUT-WELD (M8X1.25)
	CH8T-3490	1	NUT-WELD (M10X1.5)
	CH8T-3597	1	NUT-WELD (M12X1.75)

[A] PART OF 158-2342 HYD AR-COMMON

0895667A
PR: t05i29k58b0364

GUARD GP-HDY FILTER - 233-7373

ROW ONLY

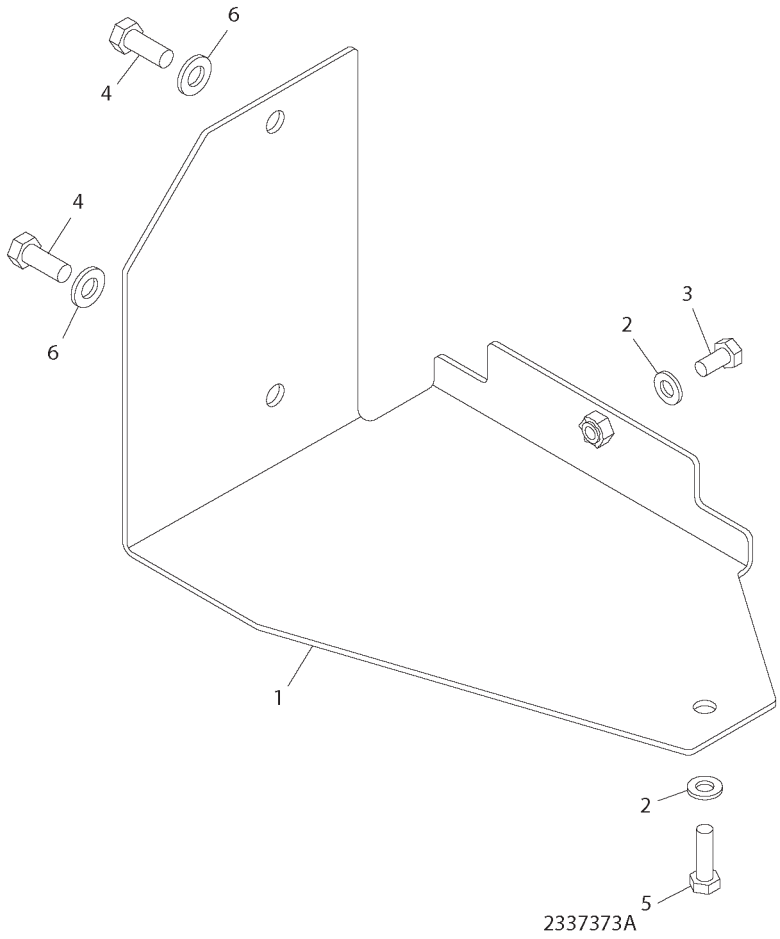

GUARD GP-HDY FILTER - 233-7373

ROW ONLY

ITEM	NUMBER	QTY	DESCRIPTION
-	233-7373	--	GUARD GP-HDY FILTER
1	224-6641	1	PLATE AS.
2	8T-4121	2	WASHER-HARD M10
3	8T-4137	1	BOLT- M10X1.5 X20ZNDI HHD 10.9
4	8T-4139	2	BOLT- M12X1.75X30 ZNDI HHD10.9
5	8T-4196	1	BOLT
6	8T-4223	2	WASHER-HARD M12(1/2) 26OD

2337373A
PR: t05i29k58b0365

HYDRAULIC KIT-CASE DRAIN
189-3141
EAME ONLY

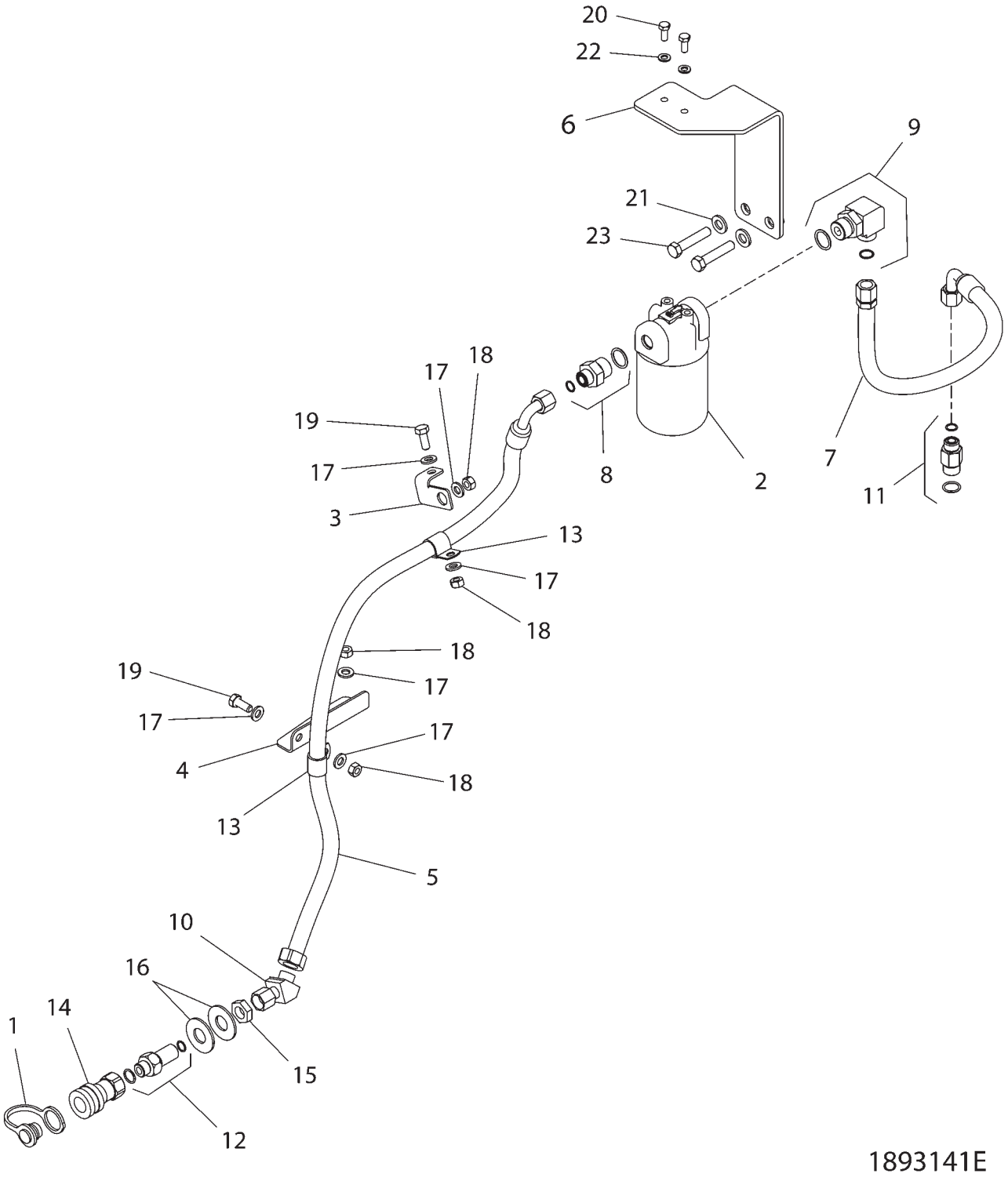

HYDRAULIC KIT-CASE DRAIN
189-3141
EAME ONLY

ITEM	NUMBER	QTY	DESCRIPTION
-	189-3141	--	HYDRAULIC KIT-CASE DRAIN FOR COMPLETE REPLACEMENT, RDER 502682D1-FLAT FACE OR 02683D1-PIONEER)
1	400564X1	1	PLUG-DUST-23.4 DIA
2	502679D1	1	FILTER GP-HYD (INCLS ELEMENT)
	501771D1	1	ELEMENT-OIL FILTER
3	200-2992	1	BRACKET
4	200-2993	1	BRACKET
5	CH208-9927	1	HOSE AS-12.7 ID SAE 100R1
6	208-9928	1	BRACKET AS
7	CH226-6489	1	HOSE AS 12.7 ID SAE 100R1 AT
8	400414X1	1	CONNECTOR AS-STR-12STOR-8ORFS
	CH6V-8398	1	SEAL-O-RING (16.03OD X 1.78)
	400319X1	1	SEAL-O-RING (19.18ID X 2.46)
9	400410X1	1	ELBOW AS-90DEG-12STOR-10ORFS
	400332X1	1	SEAL-O-RING (19.28ID X 1.78)
	400416X1	1	SEAL-O-RING (23.47ID X 2.95 DIA)
10	400616X1	1	ELBOW AS-8 ORFS 45DEG
	CH6V-8398	1	SEAL-O-RING (16.03ODX1.78)
11	CH164-5557	1	CONNECTOR AS-8ORFS X 10STOR
	400319X1	1	SEAL-O-RING (19.18IDX2.46)
	CH6V-8398	1	SEAL-O-RING (16.03ODX1.78DIA)
12	400565X1	1	CONNECTOR AS-BLKHD-8STOR-8ORFS
13	CH3S-8665	2	CLIP-LOOP 22.2 ID W/COAT
14	700719352	1	COUPLER/HALF-QUICK DISC-FEMALE
15	400348X1	1	NUT-BULKHEAD 13/16-16
16	CH7X-3383	2	WASHER-22 ID X 50 OD X 3 ZN
17	400287X1	6	WASHER-HARD 11IDX21ODX2.5 ZND1
18	WR522218	4	NUT-M10-1.5,CL10.9,ZN,H,REG
19	400039X1	2	BOLT-M10X1.5X25 ZNDI HHD 10.9
20	400053X1	2	BOLT-M8X1.25X20 ZNDI HHD 10.9
21	400357X1	2	WASHER-HARD-M12X25.50DX3THK
22	400339X1	2	WASHER-HARD
23	400063X1	2	BOLT-M12X1.75X60 ZNDI HHD 10.9

1893141E
PR: t05i29k58b0366

HYDRAULIC KIT-CASE DRAIN
189-3142

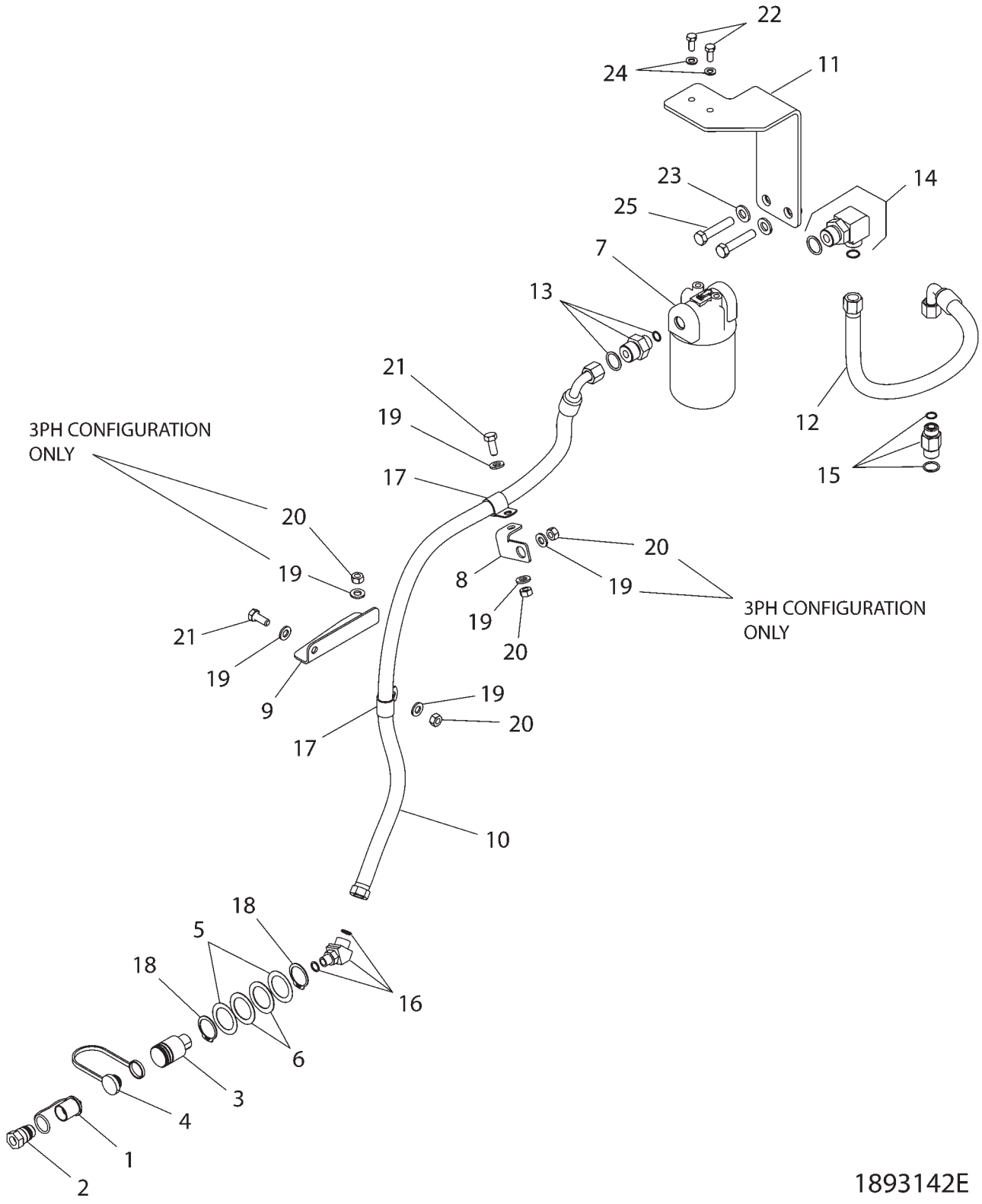

HYDRAULIC KIT-CASE DRAIN
189-3142

ITEM	NUMBER	QTY	DESCRIPTION
-	189-3142	--	HYDRAULIC KIT-CASE DRAIN FOR COMPLETE REPLACEMENT, RDER 502682D1-FLAT FACE OR 02683D1-PIONEER)
1	400423X1	1	CAP-PROTECTIVE (22 DIA)
2	400419X1	1	NIPPLE AS-QUICK DISC
3	400420X1	1	COUPLING AS-QUICK DISC
4	400422X1	1	PLUG-DUST
5	179-9827	2	SHIM
6	179-9828	2	SHIM
7	502679D1	1	FILTER GP-OIL
	501771D1	1	ELEMENT-OIL FILTER
8	200-2992	1	BRACKET
9	200-2993	1	BRACKET
10	CH208-9927	1	HOSE ASM
11	208-9928	1	BRACKET ASM
12	CH226-6489	1	HOSE ASM
13	400414X1	1	CONNECTOR AS-STR-12STOR-8ORFS
	400416X1	1	SEAL-O-RING (23.47IDX2.95DIA)
	CH6V-8398	1	SEAL-O-RING (16.03ODX1.78DIA)
14	400410X1	1	ELBOW AS (90DEG-12STOR-10ORFS)
	400416X1	1	SEAL-O-RING (23.47IDX2.95DIA)
	400322X1	1	SEAL-O-RING (19.28ID X 1.78)
15	CH164-5557	1	CONNECTOR AS-8ORFS X 10STOR
	400319X1	1	SEAL-O-RING (19.18ID X 2.46)
	CH6V-8398	1	SEAL-O-RING (16.03ODX1.78DIA)
16	CH164-5624	1	ELBOW AS (45DEG-6STOR-8ORFS)
	CH6V-8398	1	SEAL-O-RING (16.03ODX1.78DIA)
	400318X1	1	SEAL-O-RING (11.89ID X 1.98)
17	CH3S-8665	2	CLIP-LOOP 22.2 ID W/COAT
18	400421X1	2	RING-RETAINING,EXT (31IDX1.27)
19	400287X1	6	WASHER-HARD (11X21X2.5)
20	WR522218	4	NUT (M10X1.5)
21	400039X1	2	BOLT (M10X1.5X25MM)
22	400053X1	2	BOLT (M8X1.25X20MM)
23	400357X1	2	WASHER-HARD (M12X25.5X3)
24	400339X1	2	WASHER-HARD (8.8X16X2)
25	400063X1	2	BOLT (M12X1.75X60)

CASE DRAIN GP-FLAT FACE - 502643D1

3 PT HITCH

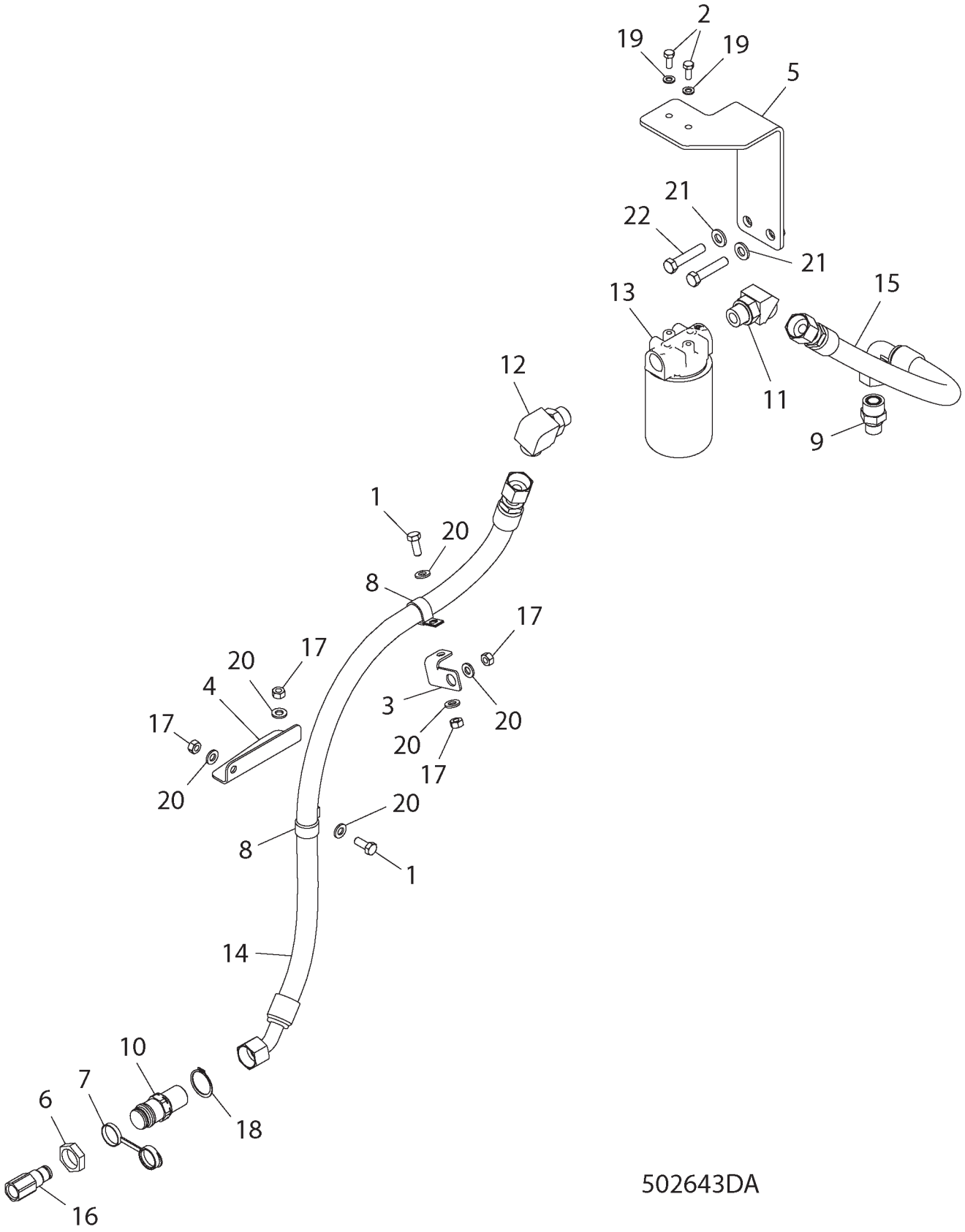

CASE DRAIN GP-FLAT FACE - 502643D1

3 PT HITCH

ITEM	NUMBER	QTY	DESCRIPTION
-	502643D1	--	CASE DRAIN GP-FLAT FACE (NOT SERVICED, ORDER FIELD INSTALLED)
-	502682D1	--	HYDRAULIC KIT-CASE DRAIN (FIELD INSTALLED)
1	400039X1	2	BOLT-M10X1.5X25 ZNDI HHD 10.9
2	400053X1	2	BOLT-M8X1.25X20 ZNDI HHD 10.9
3	200-2992	1	BRACKET
4	200-2993	1	BRACKET
5	208-9928	1	BRACKET AS
6	400961X1	1	BULKHEAD NUT-12ORFS
7	502473D1	1	CAP-DUST
8	400700X1	2	CLIP LOOP 28.58ID
9	400965X1	1	CONNECTOR AS-STR 10STOR-12ORFS
	400319X1	1	SEAL-O-RING (19.18ID X 2.46DIA)
	400366X1	1	SEAL-O-RING (22.5OD X 1.78DIA)
10	502475D1	1	COUPLER AS
	400366X1	1	SEAL-O-RING (22.5IDX1.78DIA)
11	400967X1	1	ELBOW AS-45 -12STOR-12ORFS
	400366X1	1	SEAL-O-RING (22.5OD X 1.78DIA)
	400416X1	1	SEAL-O-RING (23.47ID X 2.95DIA)
12	CH148-8347	1	ELBOW AS-90DEG 12STOR X 12ORFS
	400366X1	1	SEAL-O-RING (22.5IDX1.78DIA)
	400416X1	1	SEAL-O-RING (23.47IDX2.95DIA)
13	502679D1	1	FILTER GP-HYD
	501771D1	1	FILTER AS-HYD
14	502468D1	1	HOSE AS (FOR 19.1 ID SAE
15	502469D1	1	HOSE AS
16	502472D1	1	NIPPLE AS-FLAT FACE-SIZE 6
17	WR522218	4	NUT-M10-1.5,CL10.9,ZN,H,REG
18	400968X1	1	SNAP RING EXT
19	400339X1	2	WASHER-HARD
20	400287X1	6	WASHER-HARD 11IDX21ODX2.5 ZND1
21	400357X1	2	WASHER-HARD-M12X25.50DX3THK
22	400063X1	2	BOLT-M12X1.75X60 ZNDI HHD 10.9

502643DA
PR: t05i29k58b0368

CASE DRAIN GP-PIONEER - 502644D1

3-PT HITCH

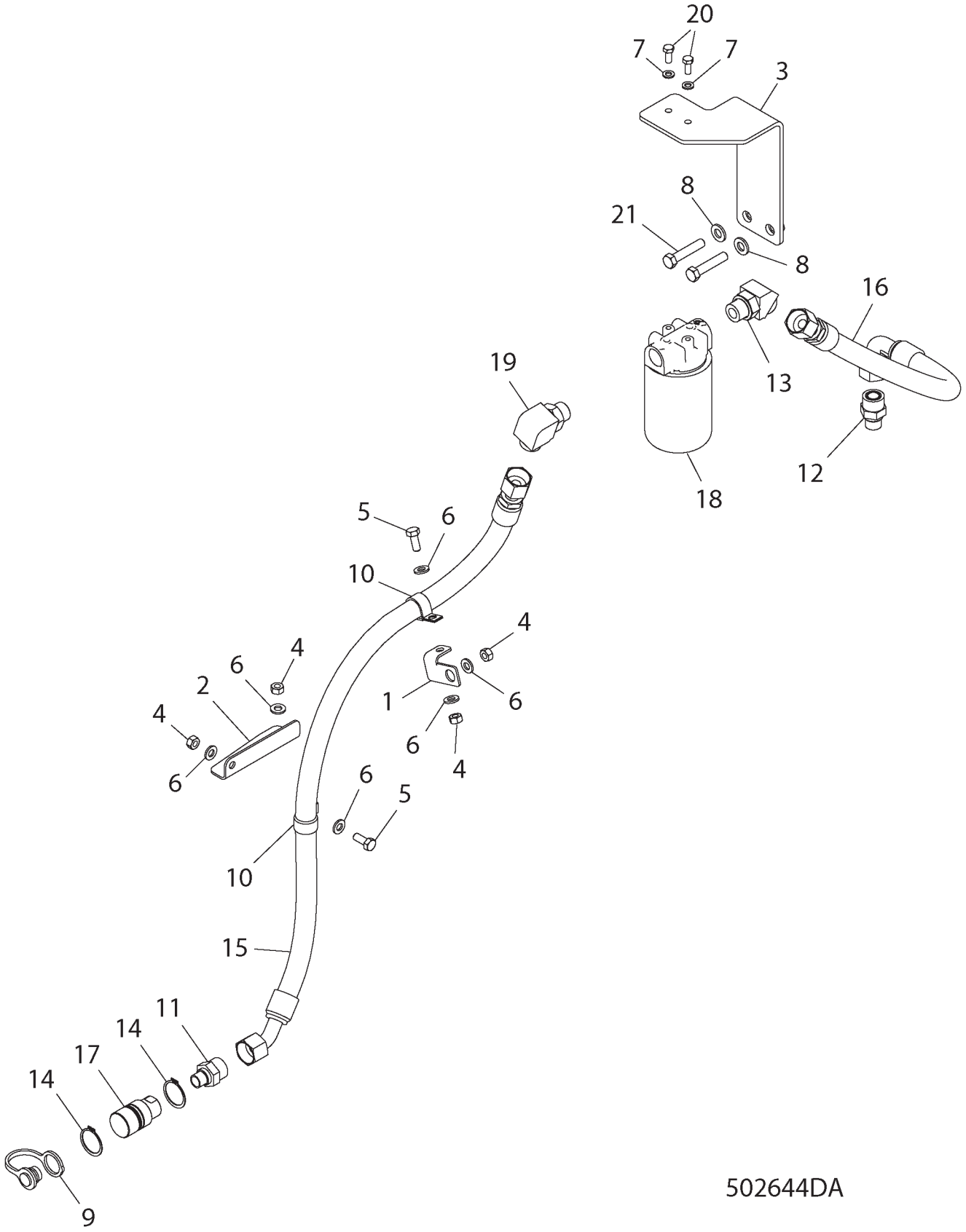

CASE DRAIN GP-PIONEER - 502644D1
3-PT HITCH

ITEM	NUMBER	QTY	DESCRIPTION
-	502644D1	--	CASE DRAIN GP-PIONEER (NOT SERVICED, ORDER FIELD INSTALLED)
-	502683D1	--	CASE DRAIN GP-PIONEER (FIELD INSTALLED)
1	200-2992	1	BRACKET
2	200-2993	1	BRACKET
3	208-9928	1	BRACKET AS
4	WR522218	4	NUT-M10-1.5,CL10.9,ZN,H,REG
5	400039X1	2	BOLT-M10X1.5X25 ZNDI HHD 10.9
6	400287X1	6	WASHER-HARD 11IDX21ODX2.5 ZND1
7	400339X1	2	WASHER-HARD
8	400357X1	2	WASHER-HARD-M12X25.50DX3THK
9	400564X1	1	PLUG-DUST-23.4 DIA
10	400700X1	2	CLIP LOOP 28.58ID
11	400963X1	1	CONNECTOR AS-STR -8STOR-12ORFS
	CH3K-0360	1	SEAL-O-RING
	400366X1	1	SEAL-O-RING (23.47ODX2.95DIA)
12	400965X1	1	CONNECTOR AS-STR 10STOR-12ORFS
	400319X1	1	SEAL-O-RING (19.18ID X 2.46DIA)
	400366X1	1	SEAL-O-RING (22.5OD X 1.78DIA)
13	400967X1	1	ELBOW AS-45 -12STOR-12ORFS
	400366X1	1	SEAL-O-RING (22.5OD X 1.78DIA)
	400416X1	1	SEAL-O-RING (23.47ID X 2.95DIA)
14	400968X1	2	SNAP RING EXT
15	502468D1	1	HOSE AS (FOR 19.1 ID SAE
16	502469D1	1	HOSE AS
17	502471D1	1	COUPLER AS-PIONEER-SIZE 8
	400569X1	1	SEAL-O-RING (20.22X3.53)
	400568X1	1	RETAINER (20.81IDX26.6ODX0.81THK)
18	502679D1	1	FILTER GP-HYD
	501771D1	1	FILTER AS-HYD
19	CH148-8347	1	ELBOW AS-90DEG 12STOR X 12ORFS
20	400053X1	2	BOLT-M8X1.25X20 ZNDI HHD 10.9
21	400063X1	2	BOLT-M12X1.75X60 ZNDI HHD 10.9

502644DA
PR: t05i29k58b0369

FILTER GP-OIL - 210-2395

TRANSMISSION/STEERING/IMPLEMENT
(S/N: PRIOR BAM40601;BBP40472;
BCC40702;BDS40823)

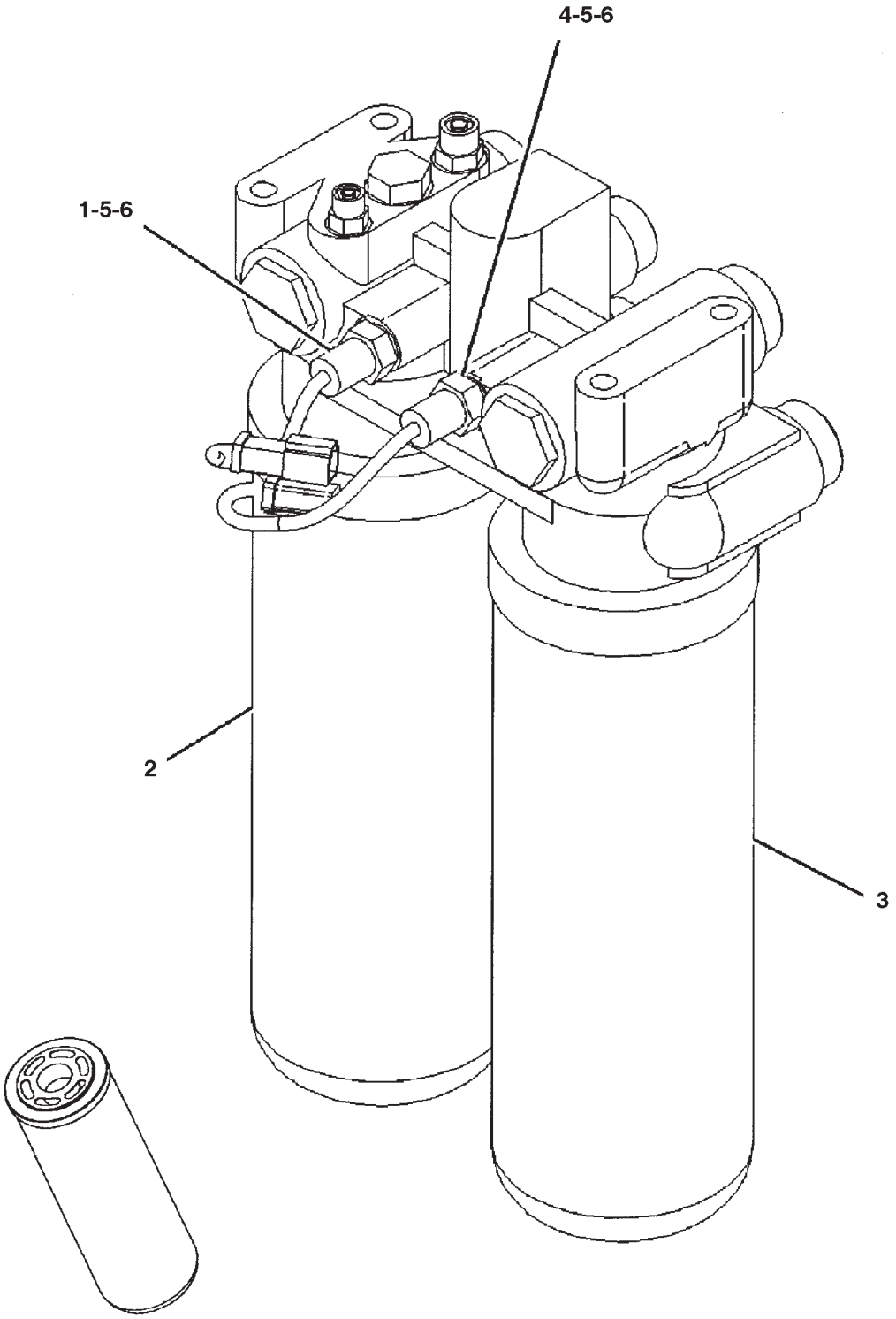

PICTORIAL VIEW

0889254A

FILTER GP-OIL - 210-2395

TRANSMISSION/STEERING/IMPLEMENT
(S/N: PRIOR BAM40601;BBP40472;
BCC40702;BDS40823)

ITEM	NUMBER	QTY	DESCRIPTION
-	210-2395	--	FILTER GP-OIL [A] (NO LONGER AVAILABLE, ORDER EFF. FILTER GP-OIL)
1	227-6744	1	SWITCH ASM-PRESSURE (TRANSMISSION & STEERING)
	102-8802	1	KIT-RECEPTACLE (2 PIN) (INCLUDES RECEPTACLE ASM AND WEDGE) (SERVICED AS COMPLETE KIT ONLY)
	186-3735	1	PIN-CONNECTOR
	9X-1813		SLEEVE
2	501766D1	1	FILTER ELEMENT ASM-OIL (HYDRAULIC) (IMPLEMENT)
3	501766D1	1	FILTER ELEMENT ASM-OIL (HYDRAULIC) (TRANSMISSION & STEERING)
4	227-6745	1	SWITCH ASM-PRESSURE (IMPLEMENT)
	CH155-2270	1	KIT-CONNECTING PLUG (2 PIN) (INCLS PLUG AS WEDGE-PLUG LOCK) (SERVICED AS COMPLETE KIT ONLY)
	CH126-1766	2	SOCKET-CONNECTOR
	9X-1813		SLEEVE
5	400318X1	2	SEAL-O-RING
6	400360X1	2	SEAL-O-RING

[A] PART OF 158-2349 FILTER & MTG GP

0889254A
PR: t05i29k58b0370

FILTER GP-OIL (BASIC) - 501767D1

(S/N: EFF BAM40601;BBP40472; BCC40702;BDS40823)

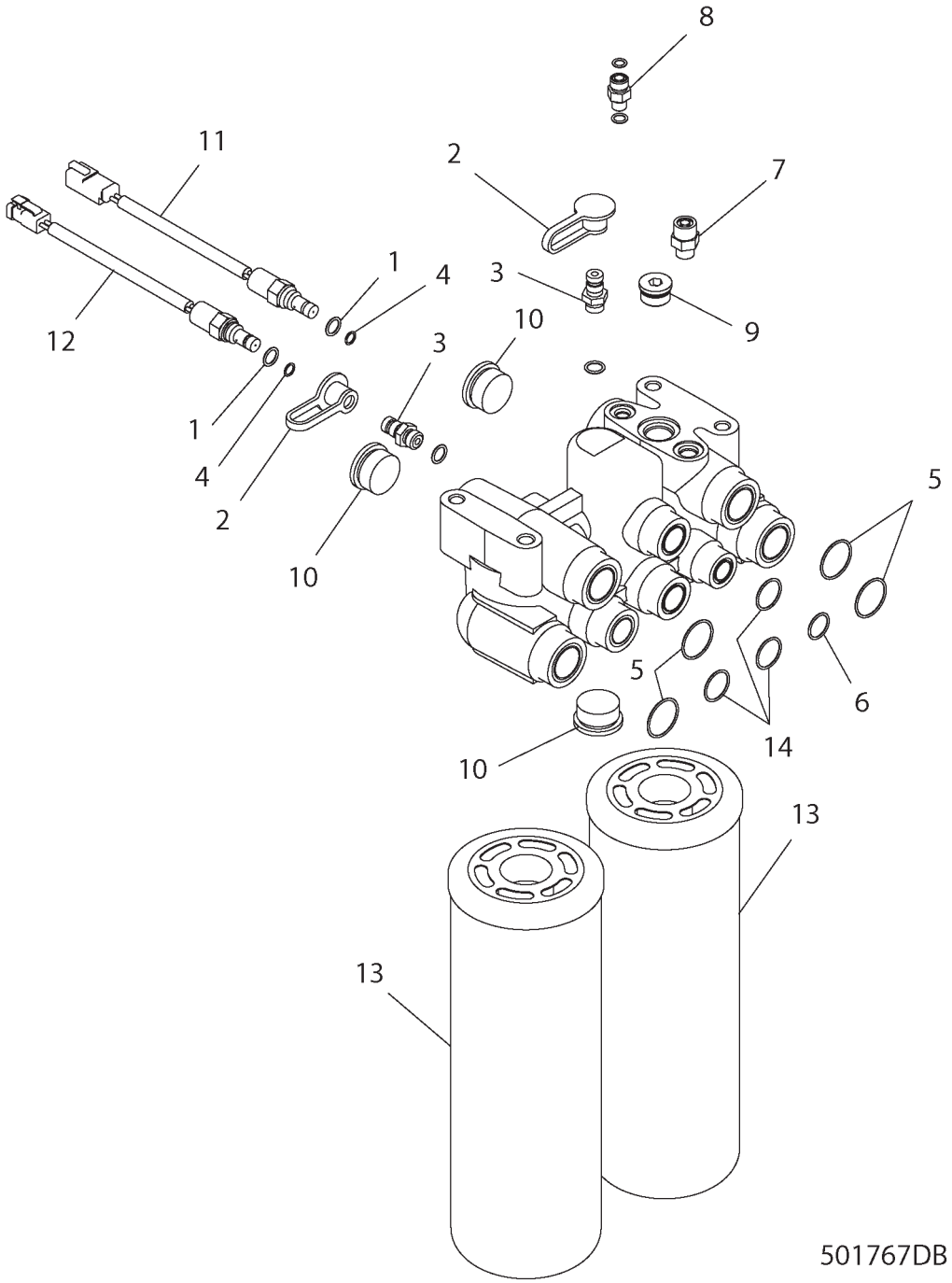

FILTER GP-OIL (BASIC) - 501767D1

(S/N: EFF BAM40601;BBP40472; BCC40702;BDS40823)

ITEM	NUMBER	QTY	DESCRIPTION
-	501767D1	--	FILTER GP-OIL (BASIC) [A]
1	400318X1	2	SEAL-O-RING (11.89ID X 1.98 DIA)
2	400323X1	2	CAP-DUST 12.6 DIA -RUBBER
3	400324X1	2	NIPPLE AS-QUICK DISC-4&ORING
	400318X1	1	SEAL-O-RING (11.89ID X 1.98)
	400325X1	1	NIPPLE AS-QUICK DISC
4	400360X1	2	SEAL-O-RING 7.65 IDX1.78 DIA
5	400365X1	4	SEAL-O-RING 33.75 ODX1.78 DIA
6	400366X1	1	SEAL-O-RING 22.5 ODX1.78 DIA
7	400367X1	1	CONNECTOR AS-6 STOR -6 ORFS
8	400368X1	1	CONNECTOR AS-STR -4STOR -4ORFS
	400361X1	1	SEAL-O-RING (8.92ID X 1.83DIA)
	400377X1	1	SEAL-O-RING (11.23OD X 1.78DIA)
9	400369X1	1	PLUG AS-10 STOR ZN HSHD&ORING
	400319X1	1	SEAL-O-RING (19.18ID X 2.46)
	400374X1	1	PLUG (10STOR)
10	400370X1	3	PLUG AS-16 STOR ZN HSHD&ORING
	400376X1	1	SEAL-O-RING (29.74ID X 2.95)
	400374X1	1	PLUG (16STOR)
11	500671D1	1	SWITCH AS-PRESSURE
12	500672D1	1	SWITCH AS-PRESSURE
13	501766D1	2	FILTER AS-HYD
14	400123X1	3	SEAL-O RING-27.22ODX1.78 DIA

[A] PART OF 158-2349 FILTER & MTG GP

501767DB
PR: t05i29k58b0371

HYDRAULIC AR - 158-2342

NO ILLUSTRATION

NOTIF13

HYDRAULIC AR - 158-2342

ITEM	NUMBER	QTY	DESCRIPTION
-	158-2342	1	HYDRAULIC AR [A] (NOT SERVICED)
1	158-2339	1	MOUNTING GP-VALVE (NOT SERVICED) (SEE BREAKDOWN FOR COMPONENTS)
2	158-2349	1	FILTER & MTG GP-HYDRAULIC (NOT SERVICED) (SEE BREAKDOWN FOR COMPONENTS)
3	158-2356	1	LINES GP-IMPLEMENT (NOT SERVICED) (SEE BREAKDOWN FOR COMPONENTS)
4	158-2393	1	LINES GP-STEERING (NOT SERVICED) (SEE BREAKDOWN FOR COMPONENTS)
5	158-2397	1	PUMP & MTG GP-HYDRAULIC (NOT SERVICED) (SEE BREAKDOWN FOR COMPONENTS)
6	172-4516	1	LINES GP-HYDRAULI OIL (NOT SERVICED) (SEE BREAKDOWN FOR COMPONENTS)

[A] PART OF 179-1952; 179-2180
BASE COMMON AR

NOTIF13
PR: t05i29k58b0372

LINES GP-COUPLER - 190-0438

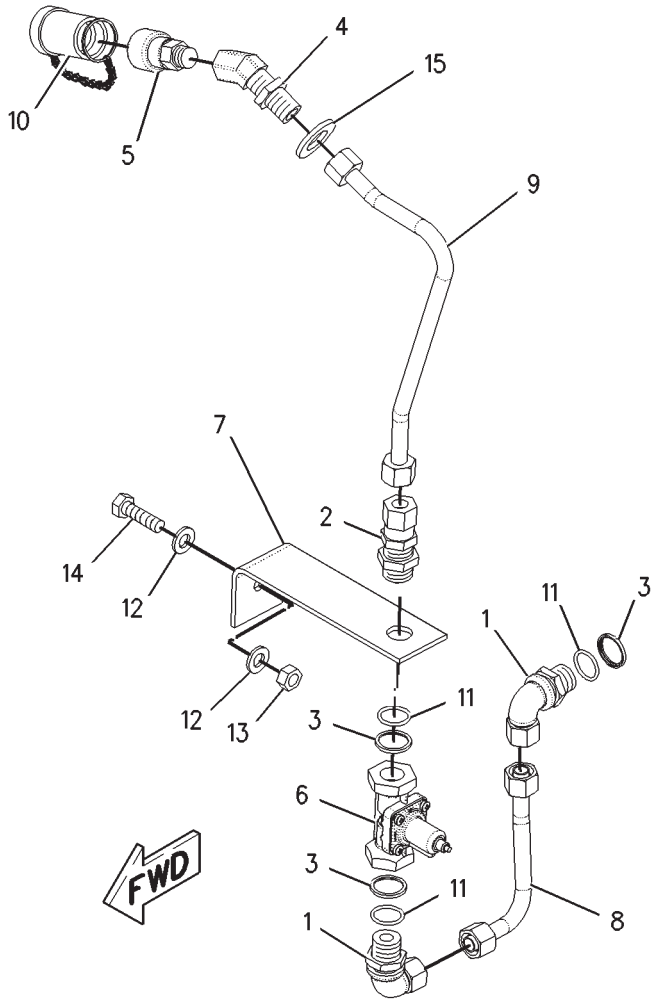

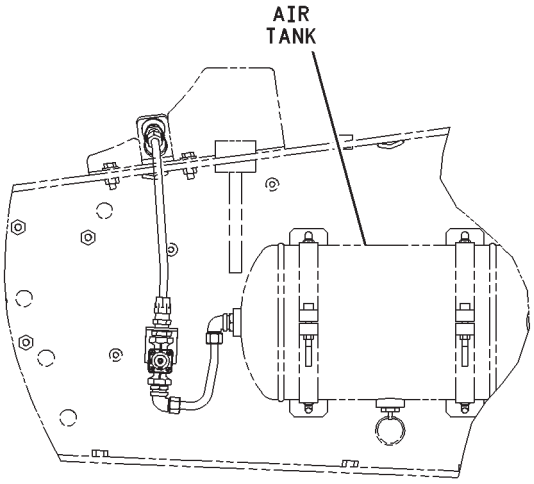

LEFT SIDE VIEW

1900438H

LINES GP-COUPLER - 190-0438

ITEM	NUMBER	QTY	DESCRIPTION
-	190-0438	--	LINES GP-COUPLER [A]
1	CH185-9753	2	ELBOW AS-90DEG (M16XM18)
2	CH185-9763	1	CONNECTOR
3	CH185-9773	3	RING-BACKUP
4	CH187-9018	1	ADAPTER-BULKHEAD (3/8-18XM18)
5	CH191-9311	1	COUPLING
6	200-4369	1	VALVE-CHARGING
7	209-7709	1	BRACKET
8	212-3601	1	TUBE AS
9	218-2803	1	TUBE AS
10	218-2806	1	CAP-DUST
11	CH3E-6762	3	SEAL-O-RING
12	400287X1	2	WASHER-HARD (11X21X2.5)
13	WR522218	1	NUT (M10X1.5)
14	400059X1	1	BOLT (M10X1.5X35MM)
15	CH8T-4994	1	WASHER-HARD (20X36.5X3.5)

[A] PART OF:
185-8860;186-1620;192-6390 BRAKE AR
192-6400;502357D1;502358D1 BRAKE AR
190-0439;190-0440;502359D1 TANK AR

1900438H
PR: t05i29k58b0373

LINES GP-COUPLER
210-0851

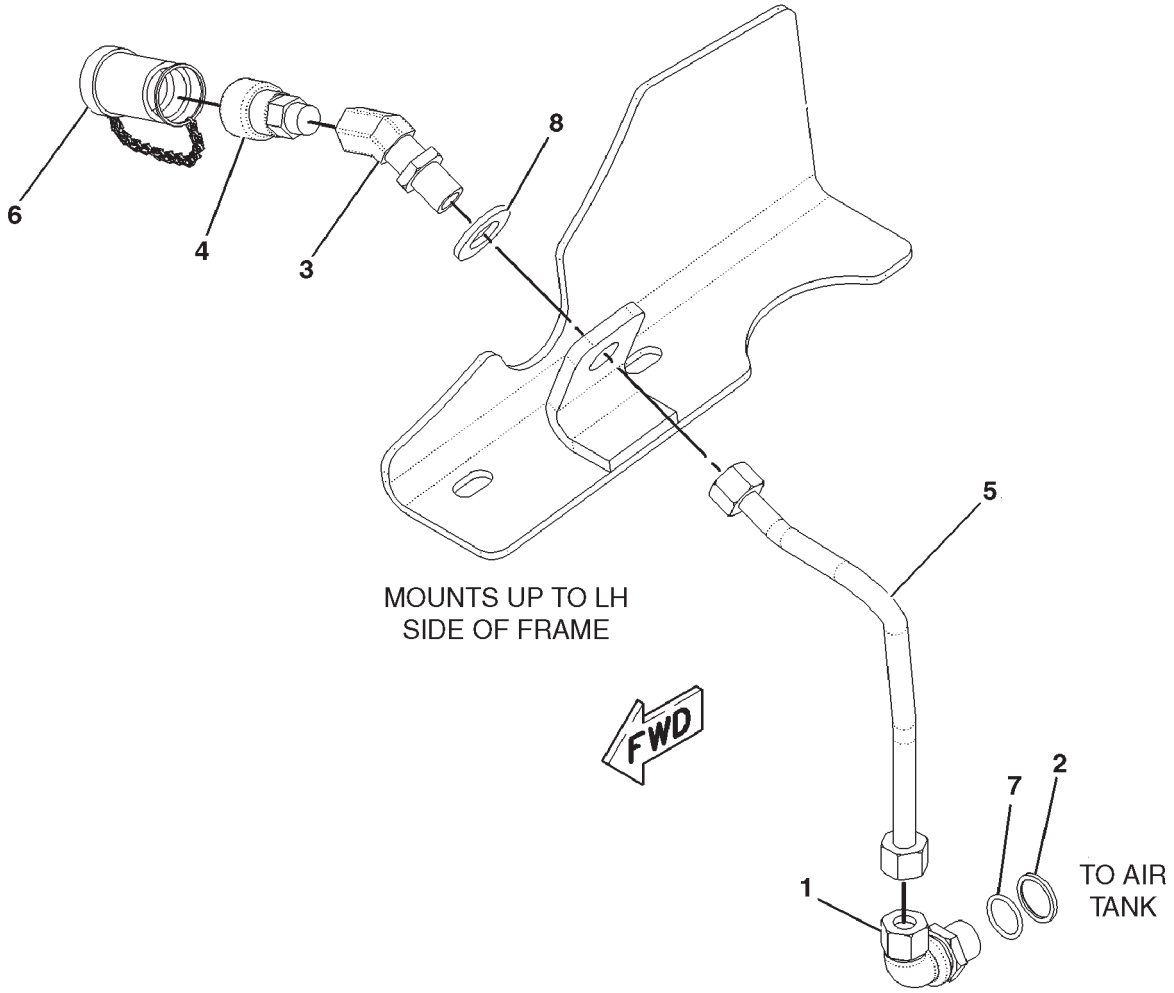

0889197A

LINES GP-COUPLER
210-0851

ITEM	NUMBER	QTY	DESCRIPTION
-	210-0851	--	LINES GP-COUPLER [A] (NOT SERVICED)
1	CH185-9753	1	ELBOW AS-90DEG (M16XM18)
2	CH185-9773	1	RING-BACKUP
3	CH187-9018	1	ADAPTER
4	CH191-9311	1	COUPLING
5	218-2805	1	TUBE ASM
6	218-2806	1	CAP-DUST
7	CH3E-6762	1	SEAL-O-RING
8	CH8T-4994	1	WASHER-HARD (20X36.5X3.5)

[A] PART OF 210-5703;210-5704;502360D1
TANK AR-AIR

0889197A
PR: t05i29k58b0374

LINES GP-HYD OIL - 172-4516

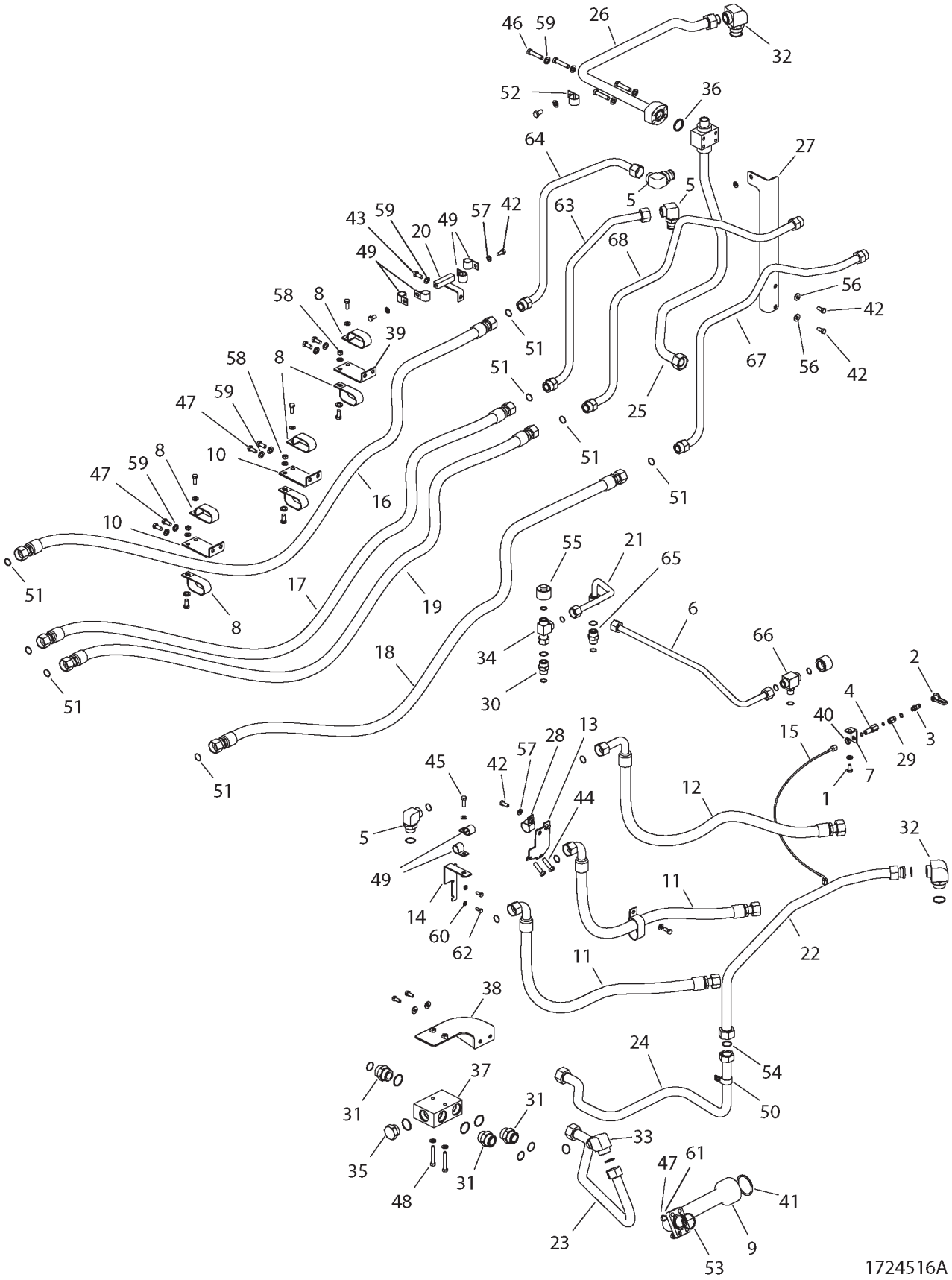

LINES GP-HYD OIL - 172-4516

ITEM	NUMBER	QTY	DESCRIPTION
-	172-4516	--	LINES GP-HYD OIL [A] (NOT SERVICED)
1	400040X1	5	BOLT-M10X1.5X20 ZNDI HHD 10.9
2	400363X1	1	CAP-DUST-12.6 DIA -RUBBER
3	400577X1	1	VALVE AS-4 3500 KPA
	400361X1	1	SEAL-O-RING (8.92IDX1.83DIA)
4	400578X1	1	ADAPTER AS-BLKDH-4ORFS-6PORT
	400377X1	1	SEAL-O-RING (11.23IDX1.78DIA)
5	400580X1	3	ELBOW AS-90DEG 16STOR 16ORFS
	400376X1	1	SEAL-O-RING (29.74IDX2.95DIA)
	400123X1	1	SEAL-O-RING (27.22ODX1.78DIA)
6	197-5414	1	TUBE AS.
7	198-4265	1	BRACKET
8	400595X1	7	CLIP-38.1 ID DBL M12 OR 7/16
9	207-7554	1	TUBE
10	209-0141	2	BRACKET AS
11	CH210-0181	2	HOSE AS-25.4ID SAE 100R1AT
12	CH210-0183	1	HOSE AS-25.4ID SAE 100R1AT
13	210-0184	1	BRACKET AS
14	210-7677	1	PLATE AS
15	CH211-0912	1	HOSE AS-6.3ID SAE 100R1AT
16	CH219-5676	1	HOSE AS-25.4ID SAE 100R1AT
17	CH219-5677	1	HOSE AS-25.4ID SAE 100R1AT
18	CH219-5678	1	HOSE AS-25.4ID SAE 100R1AT
19	CH219-5679	1	HOSE AS-25.4ID SAE 100R1AT
20	219-6551	1	BRACKET AS.
21	219-8787	1	TUBE AS.
22	223-6530	1	TUBE AS
23	224-3945	1	TUBE AS.
24	224-3946	1	TUBE AS.
25	225-0175	1	TUBE AS.
26	225-0176	1	TUBE AS.
27	226-1882	1	PLATE AS
28	400596X1	1	CLIP-38.1 ID M14 OR 1/2
29	CH148-8305	1	ADAPTER AS-6 STOR X 4 STOR
	400318X1	1	SEAL-O-RING (11.89IDX1.98DIA)
30	CH148-8327	1	CONNECTOR AS-12 ORFSX 12STOR
	400416X1	1	SEAL-O-RING 23.47IDX2.95DIA
	400366X1	1	SEAL-O-RING 22.5 ODX1.78 DIA
31	CH148-8334	3	CONNECTOR AS-20 ORFS X 20 STOR
	400365X1	1	SEAL-O-RING (29.74IDX2.95DIA)
	400593X1	1	SEAL-O-RING (33.57ODX1.78DIA)
32	CH148-8356	2	ELBOW AS-90-20ORFS X 20STOR
	400593X1	1	SEAL-O-RING (37.46IDX3DIA)
	400365X1	1	SEAL-O-RING (33.57ODX1.78DIA)
33	400582X1	1	ELBOW AS-90DEG 16STOR 20ORFS
	400365X1	1	SEAL-O-RING (33.57ODX1.78DIA)
	400376X1	1	SEAL-O-RING (29.74IDX2.95DIA)
34	400584X1	1	TEE AS-SWIVEL 12 ORFS
	400366X1	1	SEAL-O-RING 22.5 ODX1.78 DIA
35	400586X1	1	PLUG AS-STR 20 STOR
	400593X1	1	SEAL-O-RING (33.57ODX1.78DIA)

CONTINUED

[A] PART OF 158-2342 HYD AR-COMMON

LINES GP-HYD OIL - 172-4516

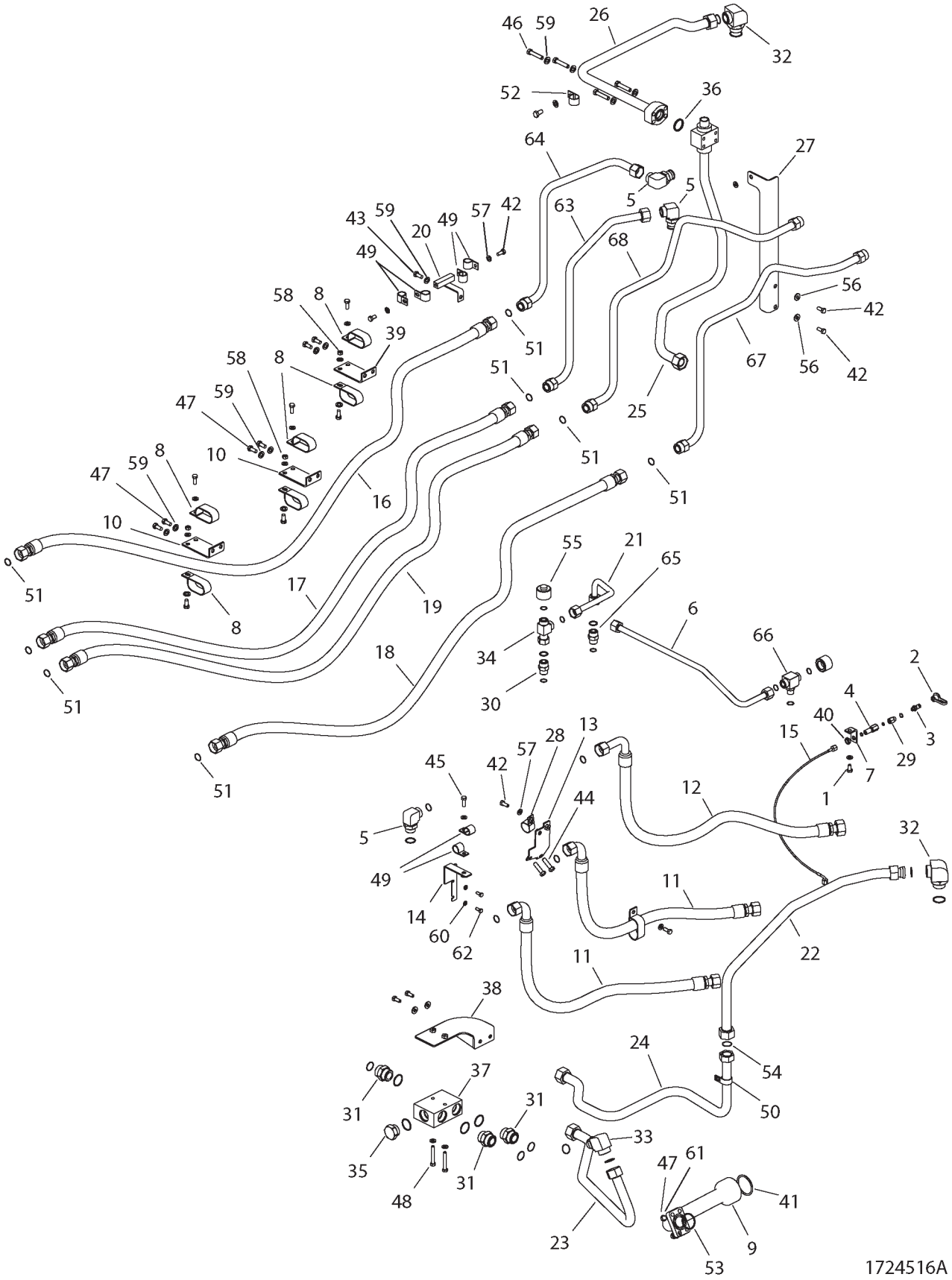

LINES GP-HYD OIL - 172-4516

ITEM	NUMBER	QTY	DESCRIPTION
-	172-4516	--	LINES GP-HYD OIL [A] (NOT SERVICED)
36	400588X1	1	SEAL-RECT 45 OD 4.95 THK
37	227-5269	1	MANIFOLD
38	227-5270	1	BRACKET AS.
39	233-8642	1	BRACKET
40	400589X1	1	NUT-LOCK 9/16-18 ZNDI BLKHD
41	400590X1	1	SEAL-O-RING 66.04 IDX5.33 DIA
42	400039X1	15	BOLT-M10X1.5X25 ZNDI HHD 10.9
43	400041X1	1	BOLT-M12X1.75X30 ZNDI HHD 10.9
44	400051X1	2	BOLT-M12X1.75X45 ZNDI HHD 10.9
45	400058X1	1	BOLT-M10X1.5X30 ZNDI HHD 10.9
46	400063X1	4	BOLT-M12X1.75X60 ZNDI HHD 10.9
47	400064X1	6	BOLT-M12X1.75X35 ZNDI HHD 10.9
48	400066X1	2	BOLT-M10X1.5X70 ZNDI HHD 10.9
49	CH4S-1962	6	CLIP-LOOP 25.4 ID
50	400597X1	1	CLIP-31.75 ID M10 OR 3/8
51	400123X1	10	SEAL-O RING-27.22ODX1.78 DIA
52	400598X1	1	CLIP-31.8 ID M10 OR 3/8
53	400591X1	1	SEAL-O-RING 50.39 IDX3.53 DIA
54	400365X1	1	SEAL-O-RING 33.75 ODX1.78 DIA
55	400107X1	1	CAP AS 19.05 OD TUBE
56	CH7X-7729	2	WASHER-11IDX5ODX3MM
57	400287X1	23	WASHER-HARD 11IDX21ODX2.5 ZND1
58	WR522218	2	NUT-M10-1.5,CL10.9,ZN,H,REG
59	400357X1	7	WASHER-HARD-M12X25.50DX3THK
60	400339X1	2	WASHER-HARD
61	400358X1	4	WASHER-HARD-7/16X22.50DX2.5THK
62	400053X1	2	BOLT-M8X1.25X20 ZNDI HHD 10.9
63	500523D1	1	TUBE AS.
64	500524D1	1	TUBE AS.
65	500956D1	1	CONNECTOR AS-ORFS
	400319X1	1	SEAL-O-RING 19.18IDX2.46DIA
	400366X1	1	SEAL-O-RING 22.5ODX1.78DIA
66	211-0535	1	TEE AS-10 STOR-12 ORFS
	400319X1	1	SEAL-O-RING 19.18IDX2.46DIA
	400366X1	2	SEAL-O-RING 22.5ODX1.78DIA
67	501926D1	1	TUBE AS
68	501927D1	1	TUBE AS

[A] PART OF 158-2342 HYD AR-COMMON

1724516A
PR: t05i29k58b0375

LINES GP-HYDRAULIC OIL - 193-1558

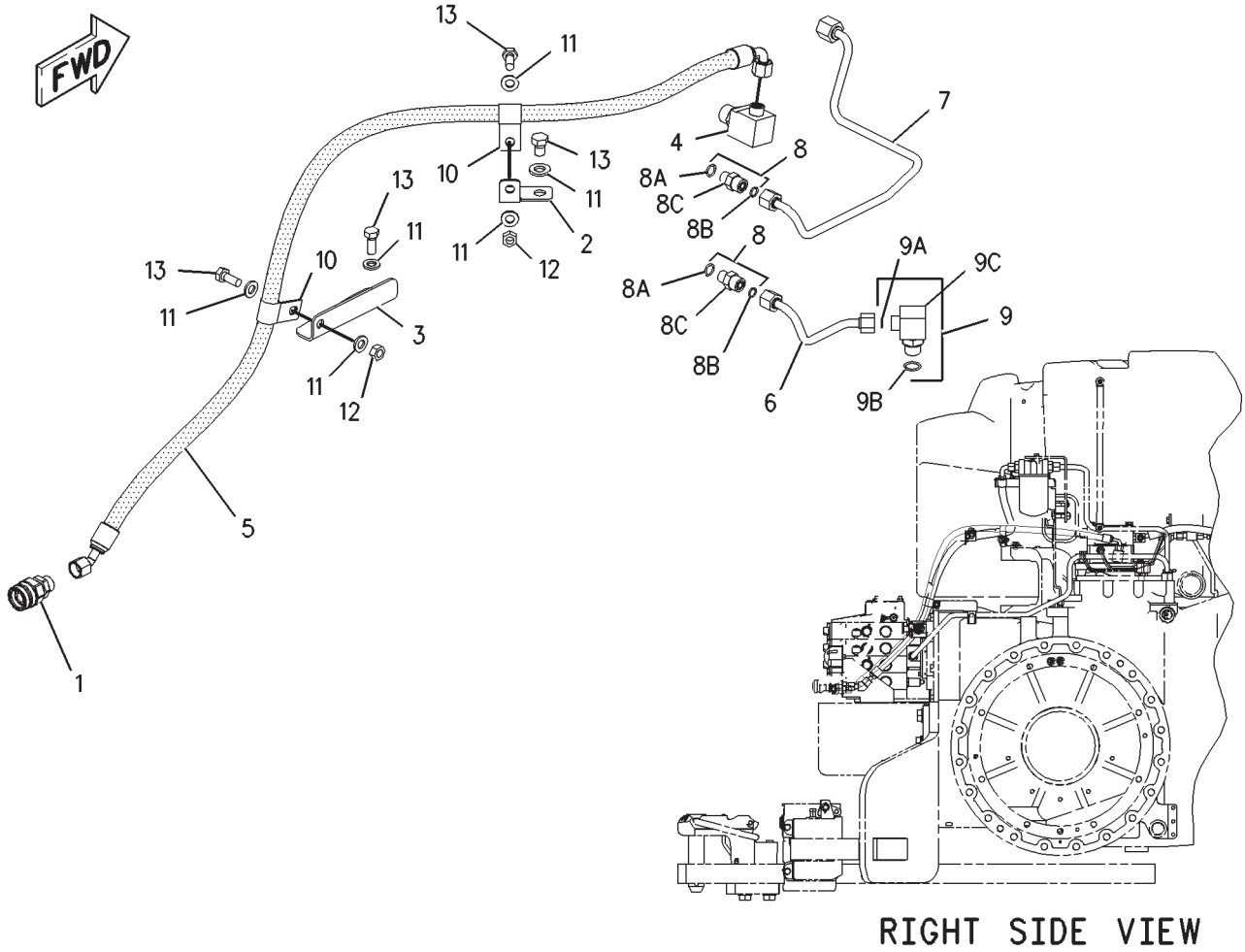

LINES GP-HYDRAULIC OIL - 193-1558

ITEM	NUMBER	QTY	DESCRIPTION
-	193-1558	--	LINES GP-HYDRAULIC [A] (NOT SERVICED)
1	CH185-3959	1	COUPLER GP-QUICK (INCLS SEAL)
	400378X1	1	SEAL-O-RING (12.83ODX1.78DIA)
-	CH223-9254	1	CAP-DUST (USE W/ITEM 1) (NOT SHOWN)
2	200-2992	1	BRACKET
3	200-2993	1	BRACKET
4	CH205-3692	1	ELBOW AS
5	CH208-9850	1	HOSE AS
6	208-9875	1	TUBE AS
7	208-9878	1	TUBE AS
8	400367X1	2	CONNECTOR AS 6 STOR-6 (INCLS 8A-8C)
8A	400318X1	1	SEAL-O-RING (11.89ID X 1.98 DIA)
8B	400378X1	1	SEAL-O-RING (12.83OD X 1.78 DIA)
8C	400372X1	1	CONNECTOR-STR -6 STOR -6 ORFS
9	CH148-8374	1	ELBOW AS-90DEG 6ORFS X 8STOR
9A	400378X1	1	SEAL-O-RING (12.83OD X 1.78 DIA)
9B	CH3K-0360	1	SEAL-O-RING (16.36ID X 2.21 DIA)
9C	CH6V-8723	1	ELBOW
10	CH4D-7735	2	CLIP
11	400287X1	6	WASHER-HARD (11X21X2.5)
12	WR522218	4	NUT (M10X1.5)
13	400039X1	2	BOLT (M10X1.5X25MM)

[A] PART OF:
193-8199; 193-8200 VALVE AR
209-3689 KIT-HYD TRAILER BRAKE

00857381
PR: t05i29k58b0376

LINES GP-IMPLEMENT - 158-2356

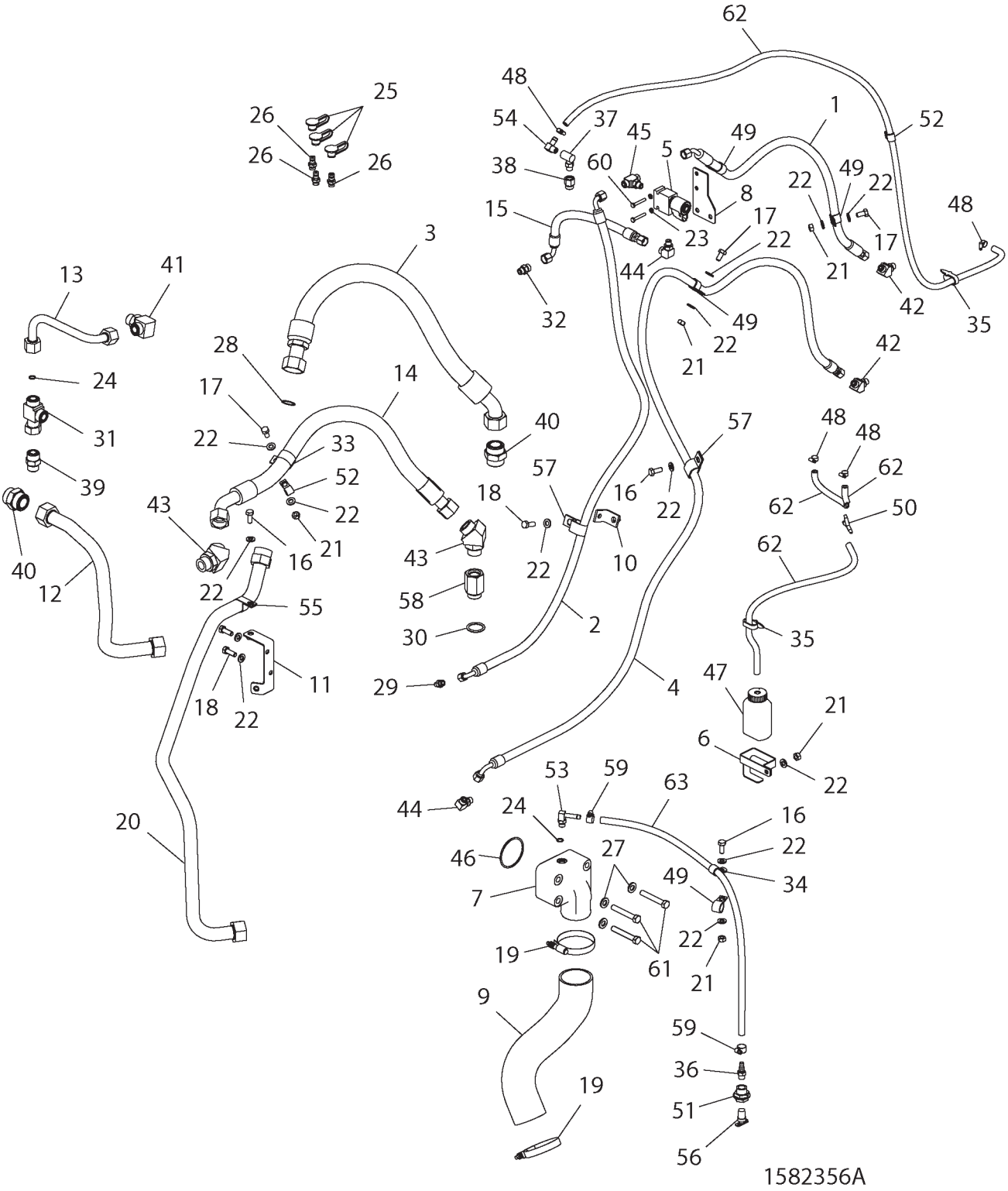

LINES GP-IMPLEMENT - 158-2356

ITEM	NUMBER	QTY	DESCRIPTION
-	158-2356	--	LINES GP-IMPLEMENT [A] (NOT SERVICED)
1	CH208-9972	1	HOSE AS-9.5 ID SAE 100R12
2	CH208-9973	1	HOSE AS-9.5 ID SAE 100R2AT
3	CH225-5203	1	HOSE AS-31.81ID SAE 100R1AT
4	CH208-9974	1	HOSE AS-9.5 ID SAE 100R2AT
5	207-0745	1	VALVE GP- SOL
6	179-8664	1	BRACKET
7	209-6677	1	ELBOW
8	211-1850	1	BRACKET AS.
9	211-3547	1	HOSE
10	211-3715	1	BRACKET AS.
11	211-4410	1	BRACKET AS.
12	211-8315	1	TUBE AS.
13	217-7365	1	TUBE AS.
14	CH219-7932	1	HOSE AS-25.4ID SAE 100R12
15	230-9563	1	HOSE AS.
16	400039X1	3	BOLT-M10X1.5X25 ZNDI HHD 10.9
17	400040X1	3	BOLT-M10X1.5X20 ZNDI HHD 10.9
18	400058X1	3	BOLT-M10X1.5X30 ZNDI HHD 10.9
19	400359X1	2	CLAMP-HOSE,SST 70-92X16
20	500129D1	1	TUBE AS.
21	WR522218	5	NUT-M10-1.5,CL10.9,ZN,H,REG
22	400287X1	14	WASHER-HARD 11IDX21ODX2.5 ZND1
23	400310X1	2	WASHER
24	400318X1	2	SEAL-O-RING 11.89IDXDIA1.98
25	400323X1	3	CAP-DUST 12.6 DIA -RUBBER
26	400324X1	3	NIPPLE AS-QUICK DISC-4&ORING
27	400357X1	3	WASHER-HARD-M12X25.50DX3THK
28	400365X1	1	SEAL-O-RING 33.75 ODX1.78 DIA
29	400368X1	1	CONNECTOR AS-STR -4STOR -4ORFS
	400361X1	1	SEAL-O-RING (8.92ID X 1.83DIA)
	400377X1	1	SEAL-O-RING (11.23OD X 1.78DIA)
30	400376X1	1	SEAL-O-RING 29.74 IDX2.95 DIA
31	400584X1	1	TEE AS-SWIVEL 12 ORFS
	400366X1	1	SEAL-O-RING 22.5 ODX1.78 DIA
32	400638X1	1	CONNECTOR AS-STR-6STOR-6ORFS
33	400689X1	1	CLIP LOOP 38.1ID
34	400702X1	1	CLIP-ONE TUBE COATED
35	400837X1	4	STRAP-CABLE (PLASTIC)
36	CH003-7764	1	CONNECTOR-6 NPTFX9.52 OD BARB
37	CH106-2105	1	ELBOW-90DEG-STRAIGHT THD
38	CH148-8313	1	ADAPTER AS-8STOR X 6STOR
39	CH148-8327	1	CONNECTOR AS-12 ORFSX 12STOR
	400416X1	1	SEAL-O-RING 23.47IDX2.95DIA
	400366X1	1	SEAL-O-RING 22.5 ODX1.78 DIA

CONTINUED

[A] PART OF 158-2342 HYD AR-COMMON

1582356A
PR: t05i29k58b0377

LINES GP-IMPLEMENT - 158-2356

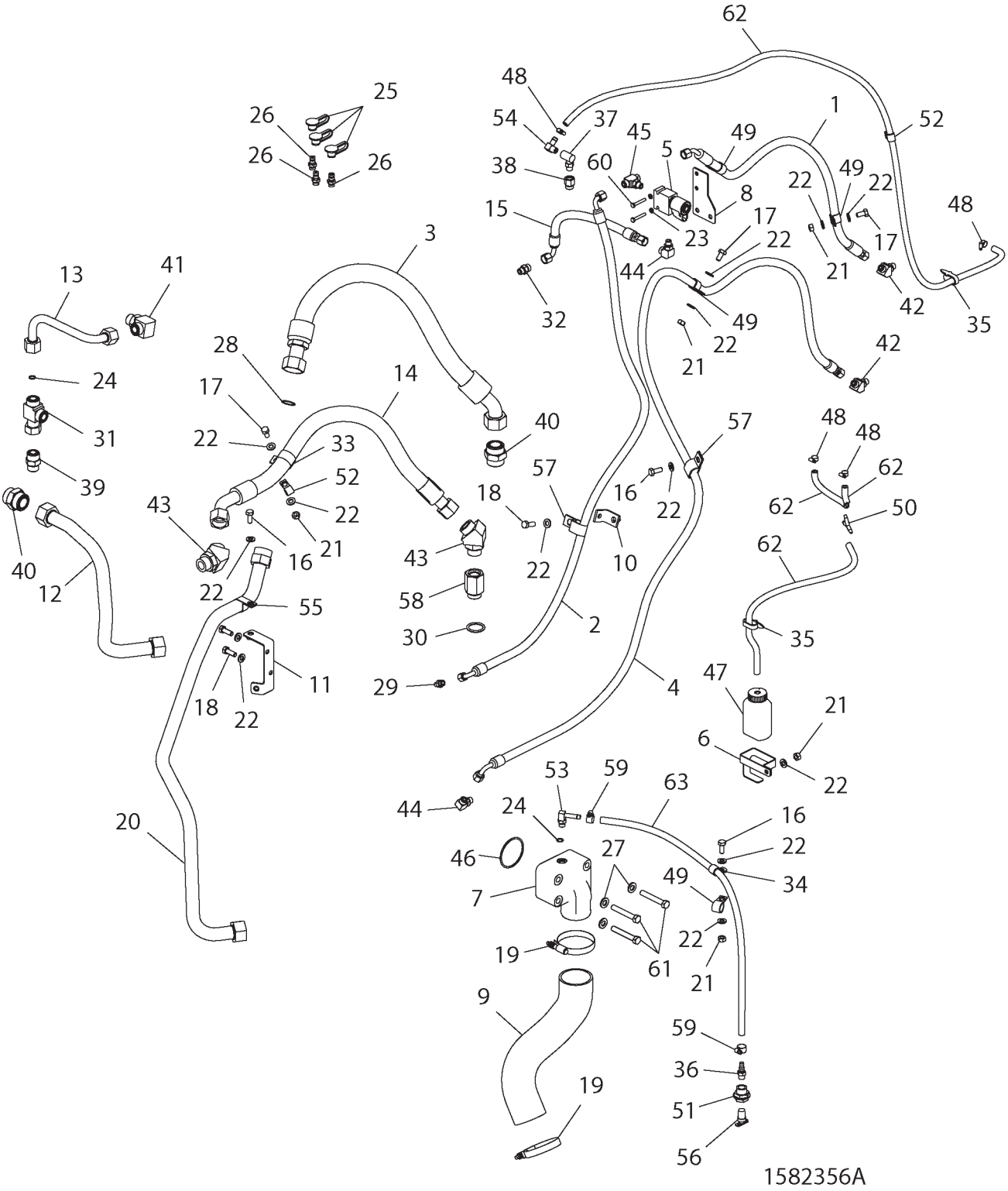

LINES GP-IMPLEMENT - 158-2356

ITEM	NUMBER	QTY	DESCRIPTION
-	158-2356	--	LINES GP-IMPLEMENT [A] (NOT SERVICED)
40	CH148-8334	2	CONNECTOR AS-20 ORFS X 20 STOR
	400365X1	1	SEAL-O-RING (29.74IDX2.95DIA)
	400593X1	1	SEAL-O-RING (33.57ODX1.78DIA)
41	CH148-8347	1	ELBOW AS-90DEG 12STOR X 12ORFS
	400366X1	1	SEAL-O-RING (22.5IDX1.78DIA)
	400416X1	1	SEAL-O-RING (23.47IDX2.95DIA)
42	CH148-8353	2	ELBOW AS-45DEG 6STOR X 6ORFS
43	CH148-8355	2	ELBOW AS-45DEG 16STORX16ORFS
44	CH148-8378	2	ELBOW AS-90 DEG 4 STOR X6 ORFS
	400318X1	1	SEAL-O-RING (11.89IDX1.98DIA)
	400378X1	1	SEAL-O-RING (12.83ODX1.78DIA)
45	CH148-8439	1	TEE AS-6ORFS X 6ORFS X 6STOR
46	CH149-0231	1	SEAL-O-RING 72.62ID X 3.53DIA
47	CH179-8665	1	BOTTLE AS
48	CH1P-4278	4	CLAMP-HOSE 5.5-15.88 ID X 8
49	CH1S-0994	4	CLIP-LOOP 20.64 ID
50	CH222-0527	1	COUPLING-Y 3 X 7.9 OD BARB
51	CH2M-1908	1	UNION-BLKHD 3/8-18 NPTF
52	CH4K-8864	2	CLIP-LOOP 14.29ID
53	CH5P-4924	1	ELBOW-90DEG 6STOR X 9.52 BARB
54	CH5P-9517	1	ELBOW-90DEG4NPTF X 7.92 OD BARB
55	CH6B-1032	1	CLIP-LOOP 31.8 ID
56	CH6V-1520	1	VALVE-SHUT OFF -6 NPTF -10HOSE
57	CH7S-1912	2	CLIP-LOOP 2X20.62 ID
58	CH8C-3051	1	ADAPTER-16STOR X 16STOR
59	400109X1	2	CLAMP-HOSE SST 11.1-19.8X13.5
60	400205X1	2	BOLT-M6X1X40MM ZNDI HHD 10.9
61	400241X1	3	BOLT-M12X1.75X80 ZNDI HHD 10.9
62	CH5P-1420	AR	HOSE (BULK) 7.92 DIA (245CM)
63	CH5P-1442	AR	HOSE-BULK 9.52ID HI TEMP (78CM)

[A] PART OF 158-2342 HYD AR-COMMON

1582356A
PR: t05i29k58b0377

LINES GP-IMPLEMENT - 172-4518

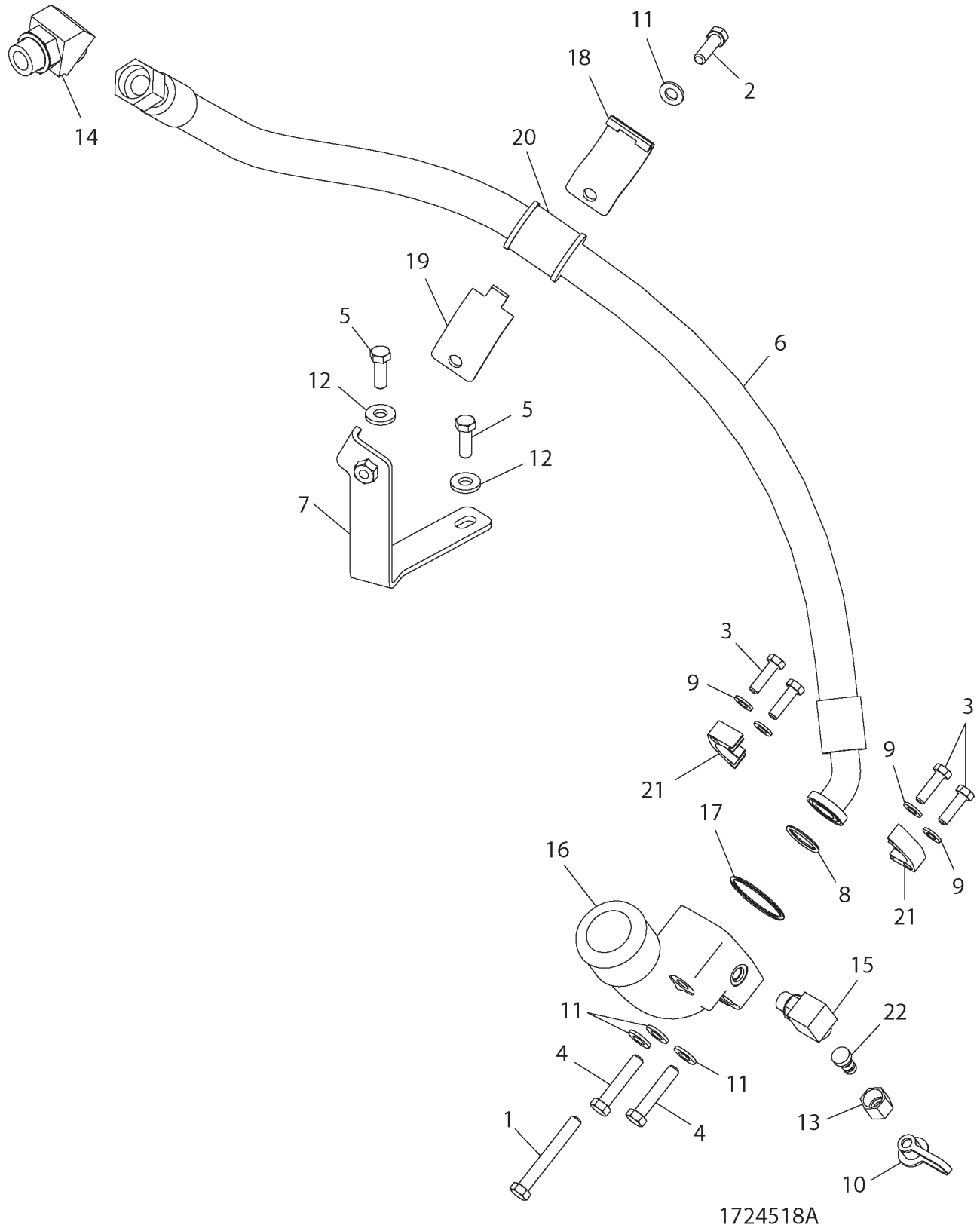

LINES GP-IMPLEMENT - 172-4518

ITEM	NUMBER	QTY	DESCRIPTION
-	172-4518	--	LINES GP-IMPLEMENT [A] (NOT SERVICED)
1	400046X1	1	BOLT-M12X1.75X90 ZNDI HHD 10.9
2	400050X1	1	BOLT-M12X1.75X40 ZNDI HHD 10.9
3	400059X1	4	BOLT-M10X1.5X35 ZNDI HHD 10.9
4	400063X1	2	BOLT-M12X1.75X60 ZNDI HHD 10.9
5	400064X1	2	BOLT-M12X1.75X35 ZNDI HHD 10.9
6	500599D1	1	HOSE AS (FOR 25.4 ID SAE
7	500458D1	1	BRACKET AS
8	400100X1	1	SEAL-O RING-32.92IDX3.53DIA
9	400287X1	4	WASHER-HARD 11IDX21ODX2.5 ZND1
10	400323X1	1	CAP-DUST 12.6 DIA -RUBBER
11	400357X1	4	WASHER-HARD-M12X25.50DX3THK
12	400381X1	2	WASHER-HARD-13.5IDX30 ODX4THK
13	400607X1	1	NUT-ORFS 13/16-16 PLATED
14	CH148-8355	1	ELBOW AS-45DEG 16STORX16ORFS
	400376X1	1	SEAL-O-RING
	400123X1	1	SEAL-O RING-27.22ODX1.78 DIA
15	CH148-8364	1	ELBOW AS-90DEG (8STOR-8ORFS)
	CH3K-0360	1	SEAL-O-RING (16.36IDX2.21DIA)
	CH6V-8398	1	SEAL-O-RING (16.03ODX1.78DIA)
16	CH211-3502	1	ELBOW
17	CH5P-4892	1	SEAL-O-RING 59.92IDX3.53DIA
18	CH5P-7468	1	CLIP-HOSE TOP 52 ID
19	CH5P-7469	1	CLIP-HOSE BOTTOM 52 ID
20	CH5P-8444	1	GROMMET-RUBBER52ODX37IDX52LG
21	CH8C-3206	2	FLANGE-HALF (-16)
22	CH8C-6416	1	NIPPLE AS-QUICK DISC -4 & ORNG

[A] PART OF 180-0184 PUMP AR-HYD

1724518A
PR: t05i29k58b0378

LINES GP-HYDRAULIC OIL - 209-8325

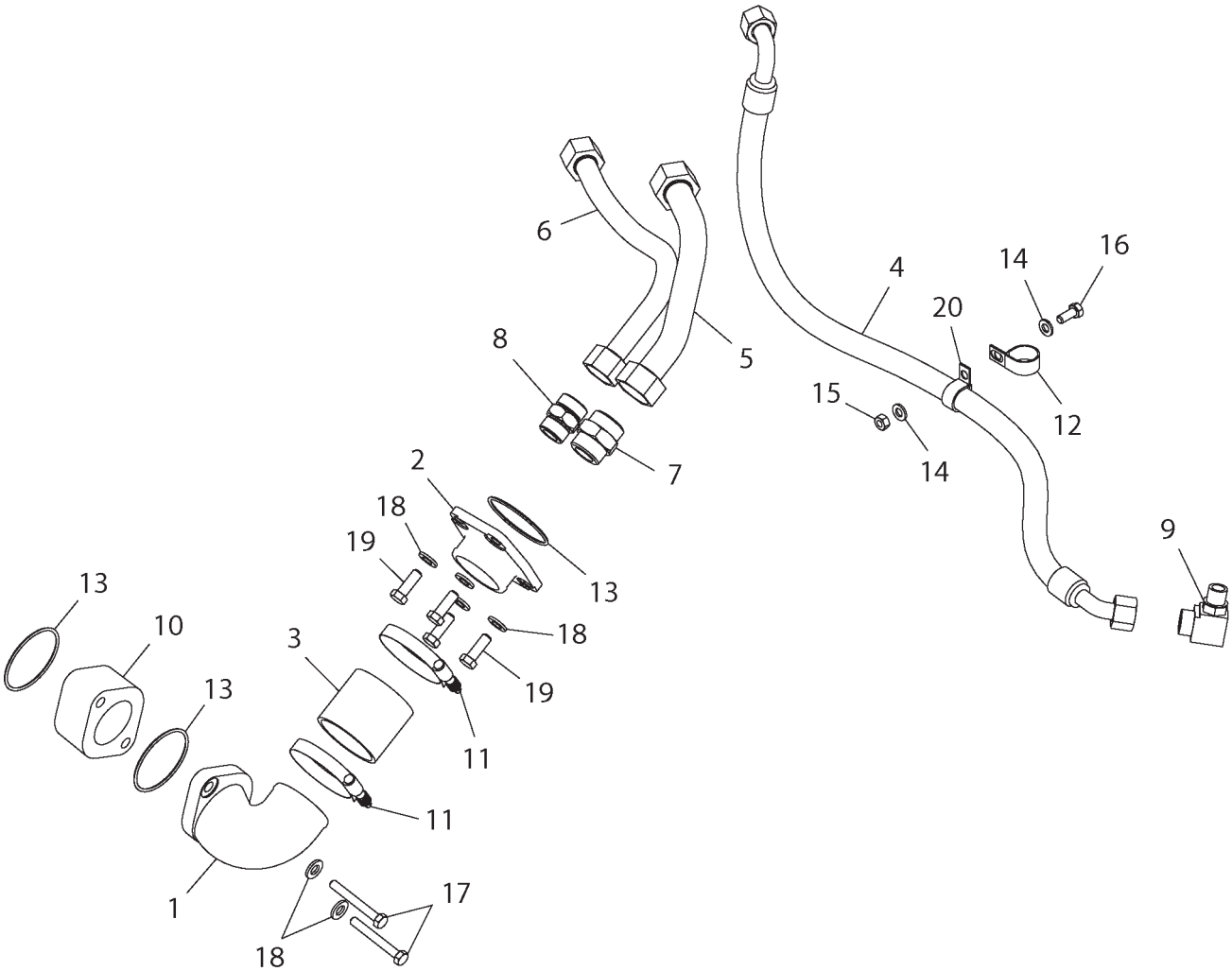

2098325A

LINES GP-HYDRAULIC OIL - 209-8325

ITEM	NUMBER	QTY	DESCRIPTION
-	209-8325	--	LINES GP-HYD OIL [A] (NOT SERVICED)
1	CH207-5359	1	TUBE
2	CH207-5360	1	TUBE
3	CH208-9844	1	HOSE
4	CH210-0159	1	HOSE AS-19.0 ID SAE 100R1
5	217-4156	1	TUBE AS.
6	217-4157	1	TUBE AS.
7	CH148-8334	1	CONNECTOR AS-20 ORFS X 20 STOR
	400365X1	1	SEAL-O-RING (29.74IDX2.95DIA)
	400593X1	1	SEAL-O-RING (33.57ODX1.78DIA)
8	CH148-8335	1	CONNECTOR AS.-16 STORX16 ORFS
	400376X1	1	SEAL-O-RING
	400123X1	1	SEAL-O RING-27.22ODX1.78 DIA
9	CH148-8388	1	ELBOW-90 DEG 10 STORX12 ORFS
	400319X1	1	SEAL-O-RING (11.89X1.98)
	400366X1	1	SEAL-O-RING
10	224-1398	1	SPACER
11	400359X1	2	CLAMP-HOSE,SST 70-92X16
12	400597X1	1	CLIP-31.75 ID M10 OR 3/8
13	400103X1	3	SEAL-O RING-82.14IDX3.53 DIA
14	400287X1	2	WASHER-HARD 11IDX21ODX2.5 ZND1
15	WR522218	1	NUT-M10-1.5,CL10.9,ZN,H,REG
16	400039X1	1	BOLT-M10X1.5X25 ZNDI HHD 10.9
17	400044X1	2	BOLT-M10X1.5X80 ZNDI HHD 10.9
18	400357X1	6	WASHER-HARD-M12X25.50DX3THK
19	400064X1	4	BOLT-M12X1.75X35 ZNDI HHD 10.9
20	400700X1	1	CLIP LOOP 28.58ID

[A] PART OF 180-0184 PUMP AR

2098325A
PR: t05i29k58b0379

LINES GP-HYDRAULIC - 209-8326
(FOR USE W/85CC CAPACITY CHARGE PUMP)

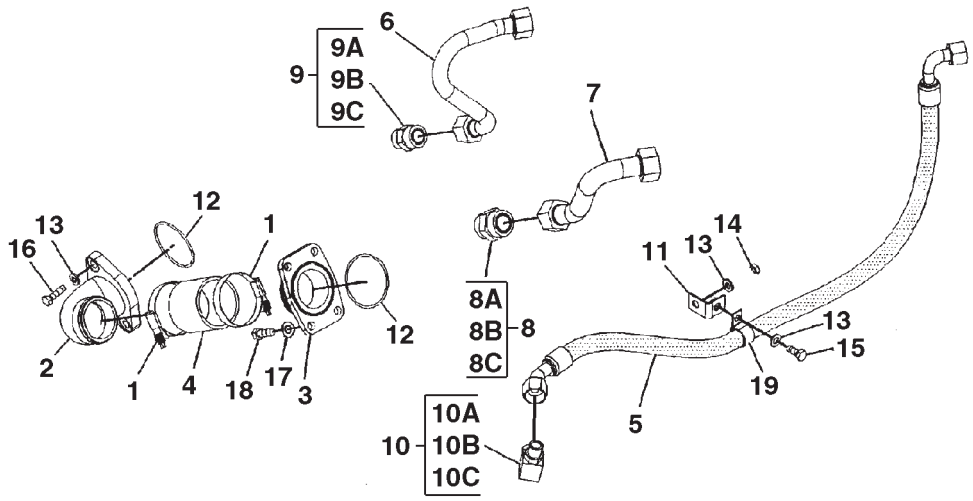

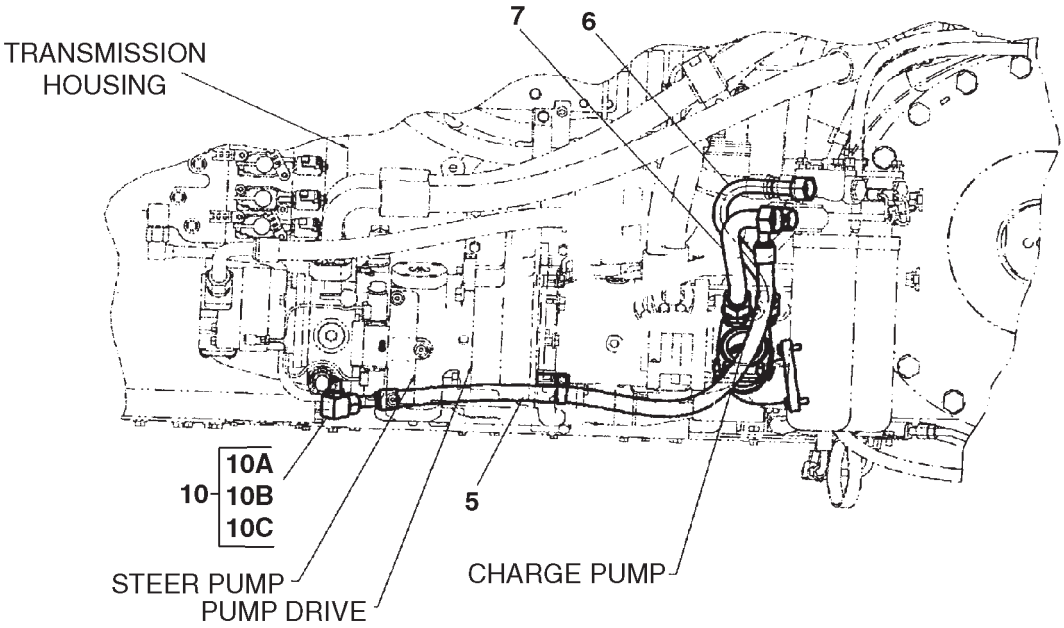

0889153A

LINES GP-HYDRAULIC - 209-8326
(FOR USE W/85CC CAPACITY CHARGE PUMP)

ITEM	NUMBER	QTY	DESCRIPTION
-	209-8326	--	LINES GP-HYDRAULIC [A] (NOT SERVICED)
1	400359X1	2	CLAMP-HOSE
2	CH207-5359	1	TUBE
3	CH207-5360	1	TUBE
4	CH208-9844	1	HOSE (7.5CM)
5	CH210-0159	1	HOSE ASM
6	219-7208	1	TUBE ASM
7	219-7209	1	TUBE ASM
8	CH148-8334	1	CONNECTOR AS-20 ORFS X 20 STOR
8A	400593X1	1	SEAL-O-RING
8B	400365X1	1	SEAL-O-RING
8C	-----	1	CONNECTOR (ORDER ITEM 8)
9	CH148-8335	1	CONNECTOR AS.-16 STORX16 ORFS
9A	400376X1	1	SEAL-O-RING
9B	400123X1	1	SEAL-O RING-27.22ODX1.78 DIA
9C	-----	1	CONNECTOR (ORDER ITEM 9)
10	CH148-8388	1	ELBOW-90 DEG 10 STORX12 ORFS
10A	400319X1	1	SEAL-O-RING (11.89X1.98)
10B	-----	1	ELBOW (ORDER ITEM 10)
10C	400366X1	1	SEAL-O-RING
11	400597X1	1	CLIP-LOOP (31.75ID)
12	400103X1	2	SEAL-O-RING
13	400287X1	4	WASHER-HARD (11X21X2.5)
14	WR522218	1	NUT-WELD (M10X1.5)
15	400039X1	1	BOLT (M10X1.5X25MM)
16	400059X1	3	BOLT (M10X1.5X35MM)
17	400357X1	4	WASHER-HARD (M12X25.5X3)
18	400064X1	4	BOLT (M12X1.75X35MM)
19	400700X1	1	CLIP (28.58ID)

[A] PART OF 180-0185 PUMP AR-HYDRAULIC

0889153A
PR: t05i29k58b0380

LINES GP-IMPL - 172-4519
87CC CAPACITY IMPLEMENT PUMP

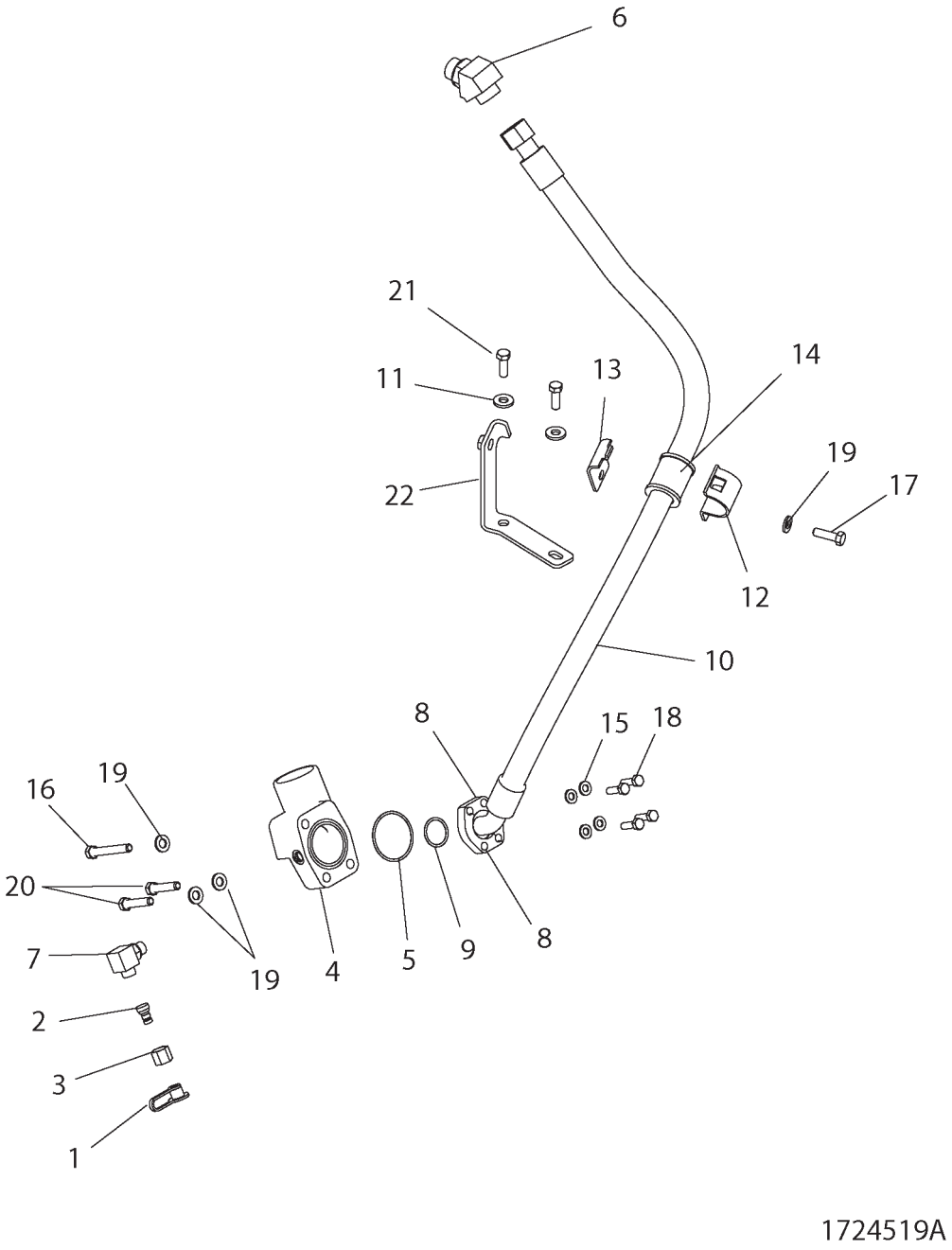

LINES GP-IMPL - 172-4519
87CC CAPACITY IMPLEMENT PUMP

ITEM	NUMBER	QTY	DESCRIPTION
-	172-4519	--	LINES GP-IMPL [A] (NOT SERVICED)
1	400323X1	1	CAP-DUST 12.6 DIA -RUBBER
2	CH8C-6416	1	NIPPLE AS-QUICK DISC -4 & ORNG
3	400607X1	1	NUT-ORFS 13/16-16 PLATED
4	CH208-0765	1	ELBOW
5	CH033-6031	1	SEAL-O-RING 69.44IDX3.53DIA
6	CH148-8355	1	ELBOW AS-45DEG 16STORX16ORFS
	CH6V-9005	1	ELBOW-45DEG
	400123X1	1	SEAL-O RING-27.22ODX1.78 DIA
	400376X1	1	SEAL-O-RING (29.74ID)
7	CH148-8364	1	ELBOW AS-90DEG (8STOR-8ORFS)
	CH3K-0360	1	SEAL-O-RING (16.36IDX2.21DIA)
	CH6V-8398	1	SEAL-O-RING (16.03ODX1.78DIA)
8	CH1P-4578	2	FLANGE-HALF (-20)
9	CH4J-0522	1	SEAL-O-RING 37.69IDX3.53DIA
10	500128D1	1	HOSE AS.
11	400381X1	2	WASHER-HARD-13.5IDX30 ODX4THK
12	CH5P-7468	1	CLIP-HOSE TOP 52 ID
13	CH5P-7469	1	CLIP-HOSE BOTTOM 52 ID
14	CH5P-8444	1	GROMMET-RUBBER52ODX37IDX52LG
15	400287X1	4	WASHER-HARD 11IDX21ODX2.5 ZND1
16	400046X1	1	BOLT-M12X1.75X90 ZNDI HHD 10.9
17	400050X1	1	BOLT-M12X1.75X40 ZNDI HHD 10.9
18	400059X1	4	BOLT-M10X1.5X35 ZNDI HHD 10.9
19	400357X1	4	WASHER-HARD-M12X25.50DX3THK
20	400063X1	2	BOLT-M12X1.75X60 ZNDI HHD 10.9
21	400064X1	2	BOLT-M12X1.75X35 ZNDI HHD 10.9
22	500458D1	1	BRACKET AS

[A] PART OF 180-0185 PUMP AR

1724519A
PR: t05i29k58b0381

LINES GP-ECOLOGY - 502214D1

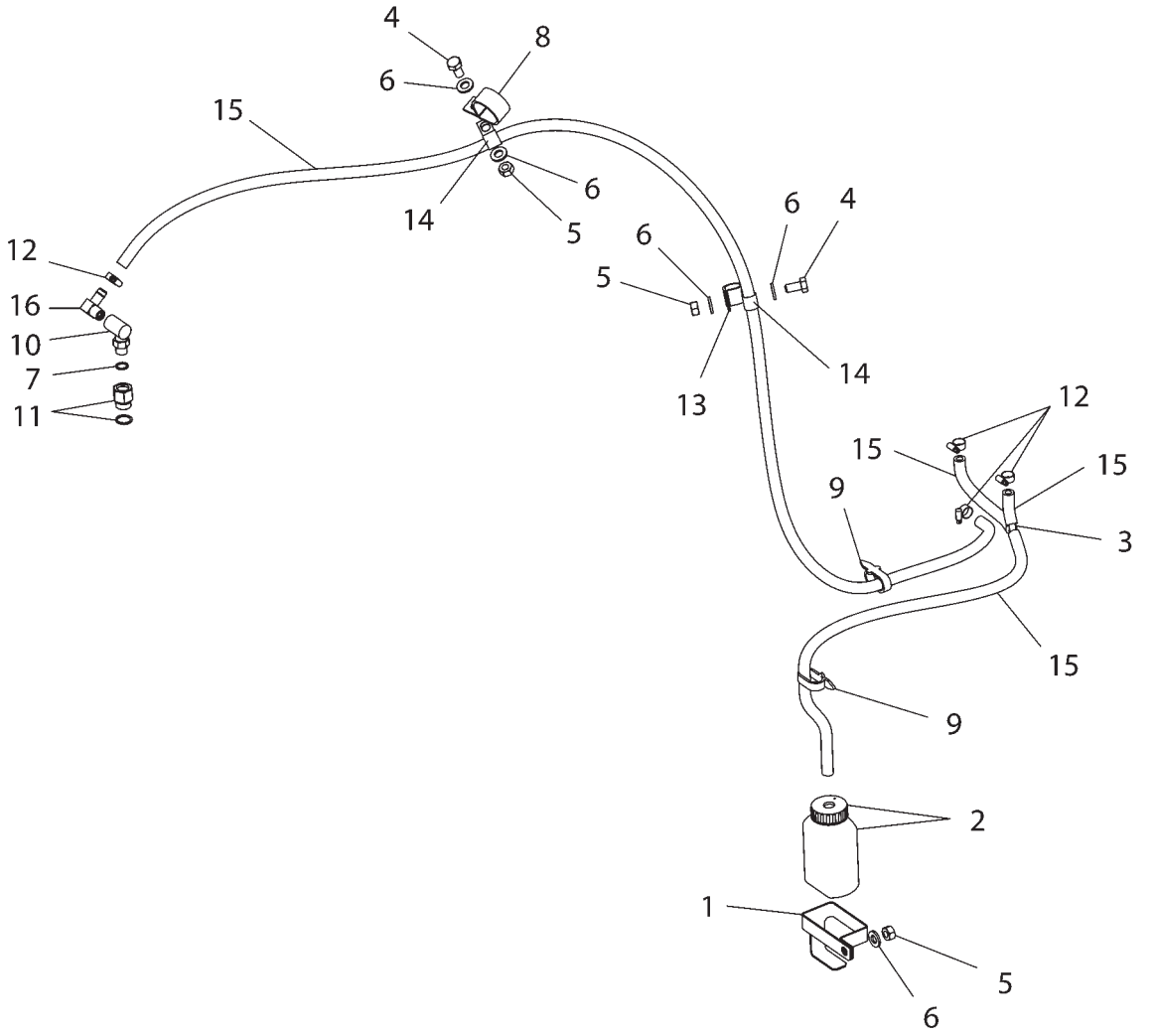

502214DC

LINES GP-ECOLOGY - 502214D1

ITEM	NUMBER	QTY	DESCRIPTION
-	502214D1	--	LINES GP-ECOLOGY [A] (NOT SERVICED)
1	179-8664	1	BRACKET
2	CH179-8665	1	BOTTLE AS
3	CH222-0527	1	COUPLING-Y 3 X 7.9 OD BARB
4	400040X1	2	BOLT-M10X1.5X20 ZNDI HHD 10.9
5	WR522218	3	NUT-M10-1.5,CL10.9,ZN,H,REG
6	400287X1	5	WASHER-HARD 11IDX21ODX2.5 ZND1
7	400318X1	1	SEAL-O-RING (11.89ID X 1.98 DIA)
8	400689X1	1	CLIP LOOP 38.1ID
9	400837X1	2	STRAP-CABLE (PLASTIC)
10	CH106-2105	1	ELBOW-900-STRAIGHT THD
11	CH148-8313	1	ADAPTER AS-8STOR X 6STOR (INCL O-RING)
	CH3K-0360	1	SEAL-O-RING (16.36 ID X 2.21 DIA)
12	CH1P-4278	4	CLAMP-HOSE 5.5-15.88 ID X 8
13	CH1S-0994	1	CLIP-LOOP 20.64 ID
14	CH4K-8864	2	CLIP-LOOP 14.29ID
15	CH5P-1420	--	HOSE (BULK) 7.92 DIA (245CM)
16	CH5P-9517	1	ELBOW-90 DEG. X 4NPTF X 7.92 OD BARB

[A] PART OF: 180-1434;500795D1
VALVE AR-IMPL

502214DC
PR: t05i29k58b0382

LINES GP-HYDRAULIC OIL - 501130D1
HYDRAULIC TRAILER BRAKE

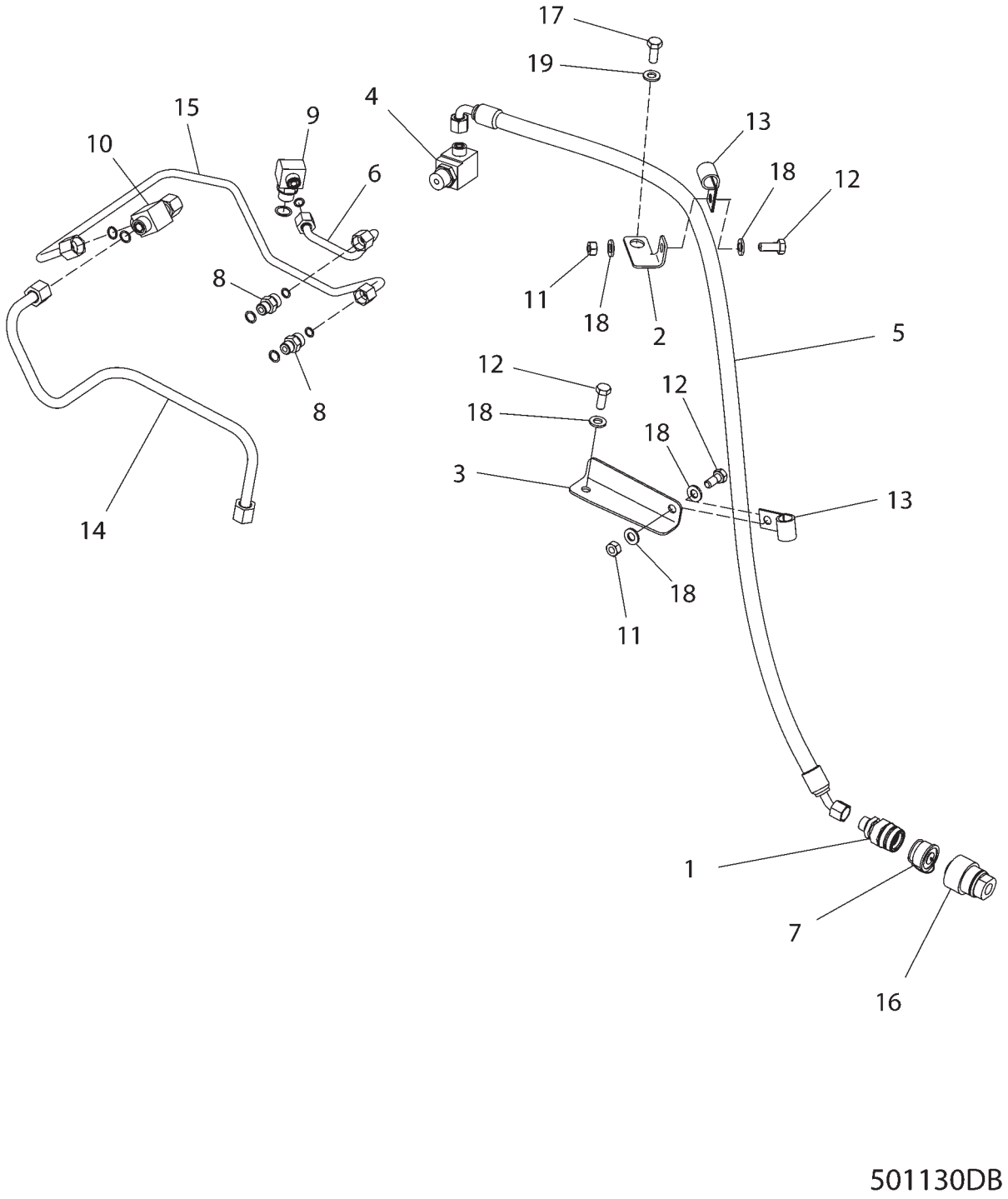

LINES GP-HYDRAULIC OIL - 501130D1
HYDRAULIC TRAILER BRAKE

ITEM	NUMBER	QTY	DESCRIPTION
-	501130D1	--	LINES GP-HYD OIL (NOT SERVICED)
1	CH185-3959	1	COUPLER-QK CONNECT 12STOR ML
2	200-2992	1	BRACKET
3	200-2993	1	BRACKET
4	CH205-3692	1	ELBOW AS-900 8STOR X 8ORFS
5	CH208-9850	1	HOSE AS-9.5 ID SAE 100R2
6	208-9875	1	TUBE AS.
7	CH223-9254	1	CAP-DUST
8	400367X1	2	CONNECTOR AS-6 STOR -6 ORFS
	400378X1	1	SEAL-O-RING (12.83ODX1.78DIA)
	400318X1	1	SEAL-O-RING (11.89ID X 1.98 DIA)
9	CH148-8374	1	ELBOW AS-90DEG 6ORFS X 8STOR
	CH3K-0360	1	SEAL-O-RING (16.36 ID X 2.21 DIA)
	400378X1	1	SEAL-O-RING (12.83ODX1.78DIA)
10	CH148-8444	1	TEE-SWIVEL 3X -8 ORFS
	CH6V-8398	2	SEAL-O-RING (16.03IDX1.78DIA)
11	WR522218	4	NUT-M10-1.5,CL10.9,ZN,H,REG
12	400039X1	3	BOLT-M10X1.5X25 ZNDI HHD 10.9
13	CH4D-7735	2	CLIP-LOOP 18.29ID
14	501127D1	1	TUBE AS
15	501128D1	1	TUBE AS
16	501129D1	1	COUPLING-TRAILER
17	400190X1	1	BOLT-M12X1.75X16 ZNDI HHD 10.9
18	400287X1	6	WASHER-HARD 11IDX21ODX2.5 ZND1
19	400357X1	1	WASHER-HARD-M12X25.50DX3THK

[A] PART OF:
501170D1 VALVE AR
501140D1 BRAKE KIT-HYD

501130DB
PR: t05i29k58b0383

LINES GP-STEERING - 158-2393

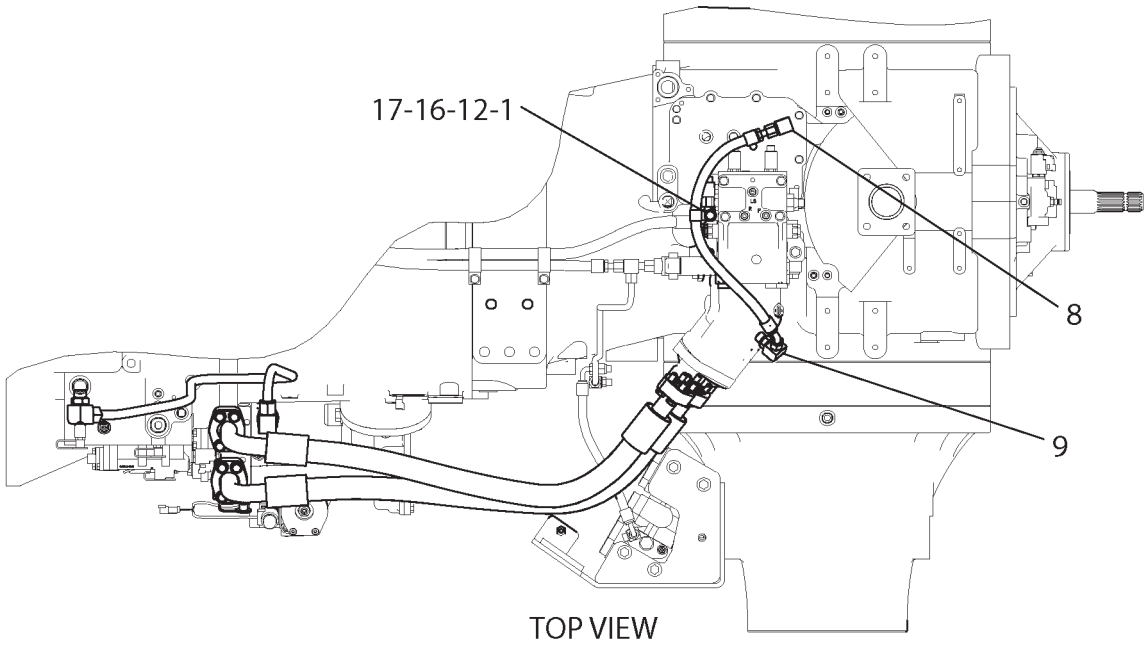

TOP VIEW

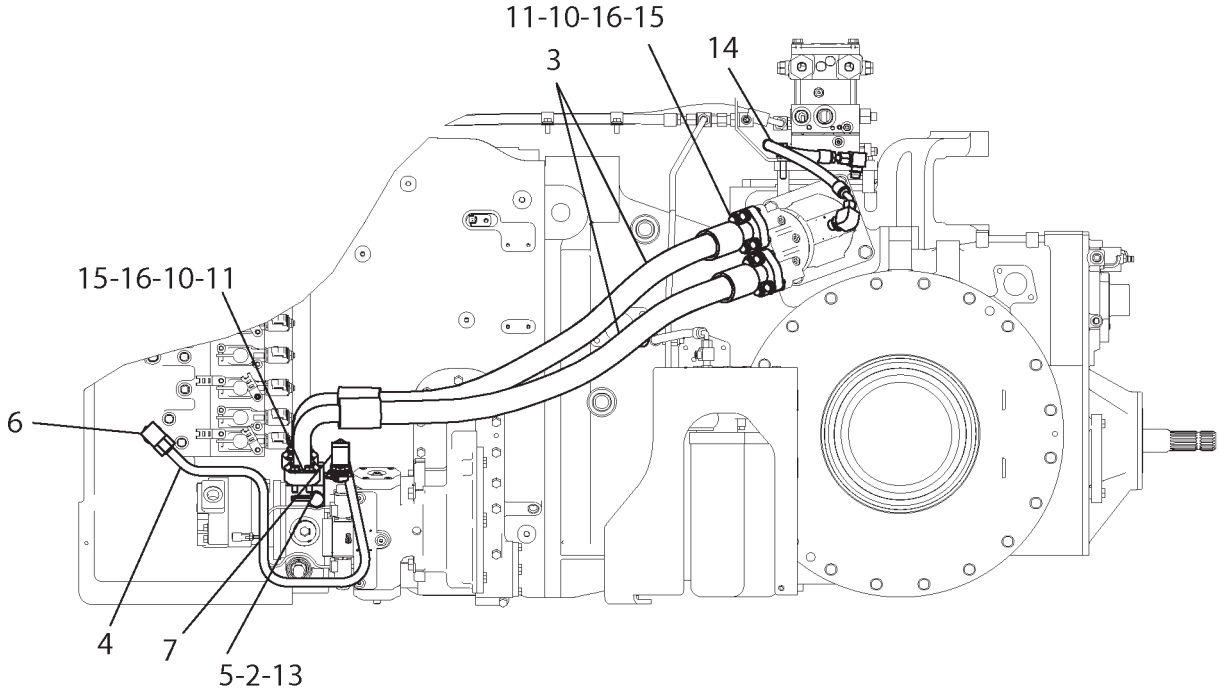

LEFT SIDE VIEW

1582393F

LINES GP-STEERING - 158-2393

ITEM	NUMBER	QTY	DESCRIPTION
-	158-2393	--	LINES GP-STEERING [A] (NOT SERVICED)
1	CH2A-1314	1	SPACER
2	400323X1	1	CAP-DUST
3	CH192-8841	2	HOSE ASM
4	193-8098	1	TUBE ASM
5	CH110-6349	1	FITTING AS
6	CH148-8347	1	ELBOW AS (12STORX12ORFS)
	400366X1	1	SEAL-O-RING (22.5IDX1.78DIA)
	400416X1	1	SEAL-O-RING (23.47IDX2.95DIA)
7	CH148-8360	1	ELBOW AS (16STORX12ORFS)
	400366X1	1	SEAL-O-RING (22.5IDX1.78DIA)
	400376X1	1	SEAL-O-RING (29.74IDX2.95DIA)
8	CH148-8364	1	ELBOW AS-90DEG (8STOR-8ORFS)
	CH3K-0360	1	SEAL-O-RING (16.36IDX2.21DIA)
	CH6V-8398	1	SEAL-O-RING (16.03ODX1.78DIA)
9	CH148-8372	1	ELBOW AS-90DEG (10STOR-8ORFS)
	CH6V-8398	1	SEAL-O-RING (16.03 OD X 1.78 DIA)
	400319X1	1	SEAL-O-RING (19.81IDX2.46DIA)
10	400588X1	4	SEAL-RECTANGULAR
11	CH1P-5767	8	FLANGE-half
12	CH1S-1015	1	CLIP-LOOP
13	400361X1	1	SEAL-O-RING (8.92IDX1.83DIA)
14	500127D1	1	HOSE ASM
15	400057X1	16	BOLT (M12X1.75X50MM)
16	400357X1	17	WASHER-HARD (M12X25.5X3)
17	400062X1	1	BOLT (M12X1.75X70MM)

[A] PART OF:
158-2342; 501809D1 HYD AR-COMMON

1582393F
PR: t05i29k58b0384

MOUNTING GP-VALVE - 158-2339

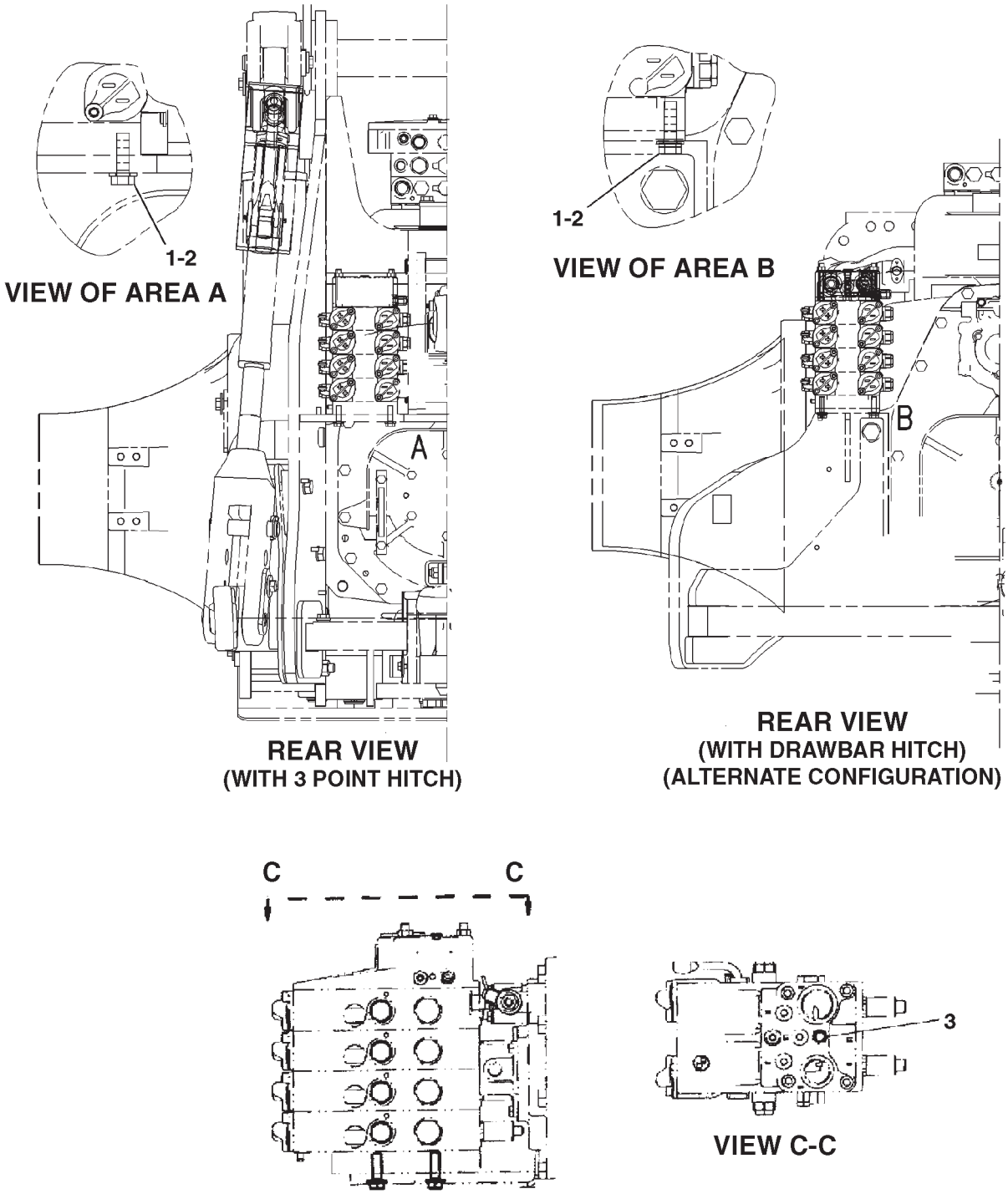

0855208A

MOUNTING GP-VALVE - 158-2339

ITEM	NUMBER	QTY	DESCRIPTION
-	158-2339	--	MOUNTING GP-VALVE [A]
1	400050X1	4	BOLT (M12X1.75X40MM)
2	400357X1	4	WASHER-HARD (M12X25.5X3)
3	CH193-5914	1	PLUG

[A] PART OF 158-2342 HYDRAULIC AR

0855208A
PR: t05i29k58b0385

MOUNTING GP-VALVE - 193-1548

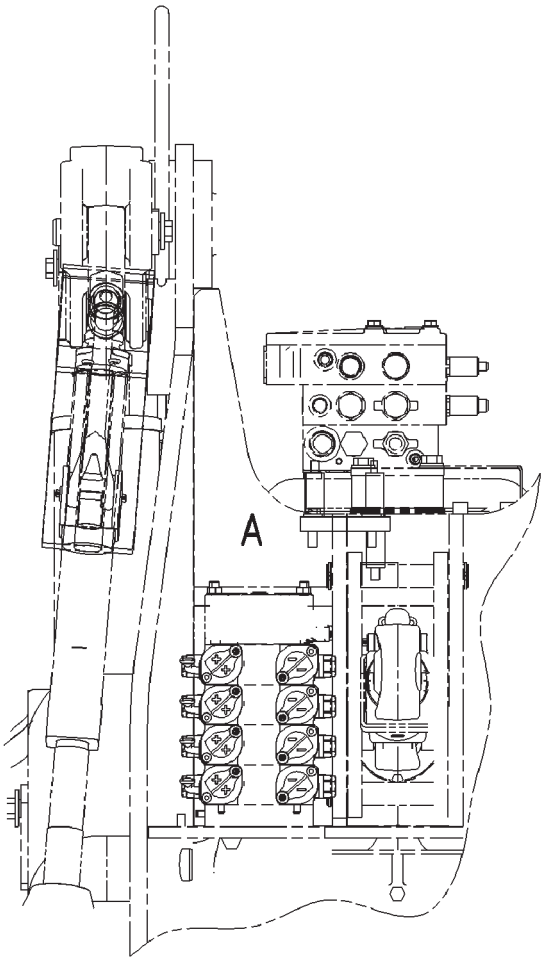

REAR VIEW

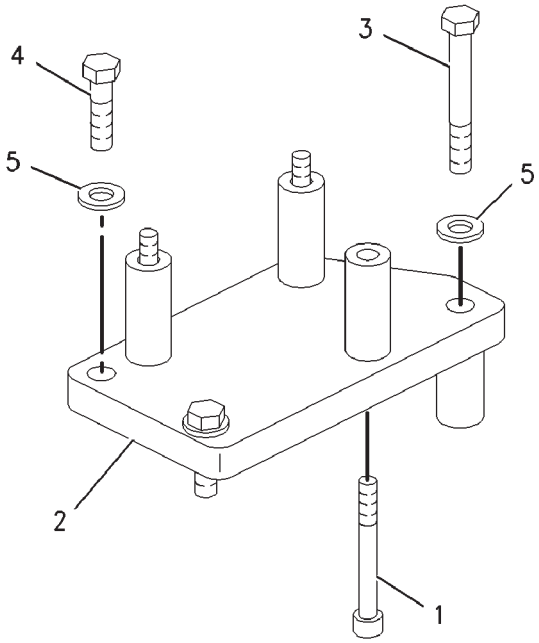

VIEW OF AREA A

MOUNTING GP-VALVE - 193-1548

ITEM	NUMBER	QTY	DESCRIPTION
-	193-1548	--	MOUNTING GP-VALVE [A] (NOT SERVICED)
1	400000X1	3	BOLT-SOCKET HEAD (M10X1.5X85)
2	224-1399	1	BRACKET AS
3	400046X1	1	BOLT (M12X1.75X90MM)
4	400051X1	2	BOLT (M12X1.75X45MM)
5	400357X1	2	WASHER-HARD (M12X25.5X3)

[A] PART OF 193-8197; 193-8198 VALVE AR

00854860
PR: t05i29k58b0386

MOUNTING GP-VALVE - 162-9805

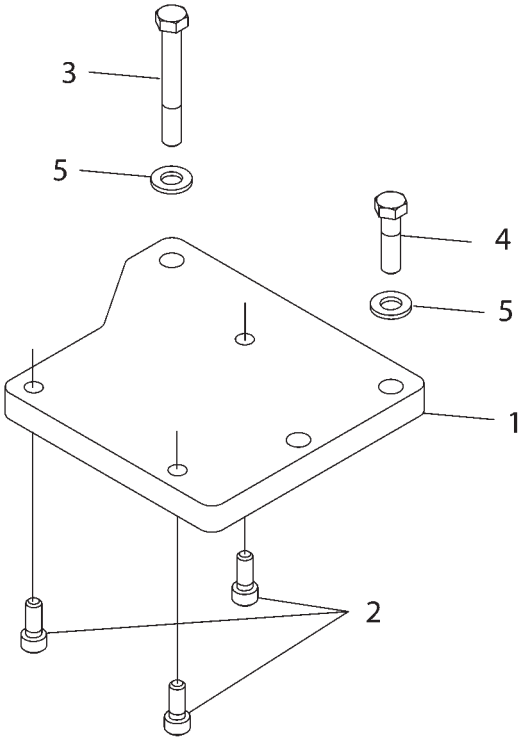

1629805D

MOUNTING GP-VALVE - 162-9805

ITEM	NUMBER	QTY	DESCRIPTION
-	162-9805	--	MOUNTING GP-VALVE [A] (NOT SERVICED)
1	209-3414	1	BRACKET AS
2	400217X1	3	BOLT (M10X1.5X25MM)
3	400046X1	1	BOLT (M12X1.75X90MM)
4	400051X1	1	BOLT (M12X1.75X45MM)
5	400357X1	2	WASHER-HARD (M12X25.5X3 THK)

[A] PART OF:
193-8199;193-8200;501070D1 VALVE AR
209-3689;501140D1 KIT-HYD BRAKE

1629805D
PR: t05i29k58b0387

PUMP & MOUNTING GP - 162-9804
(63CC IMPLEMENT PUMP)

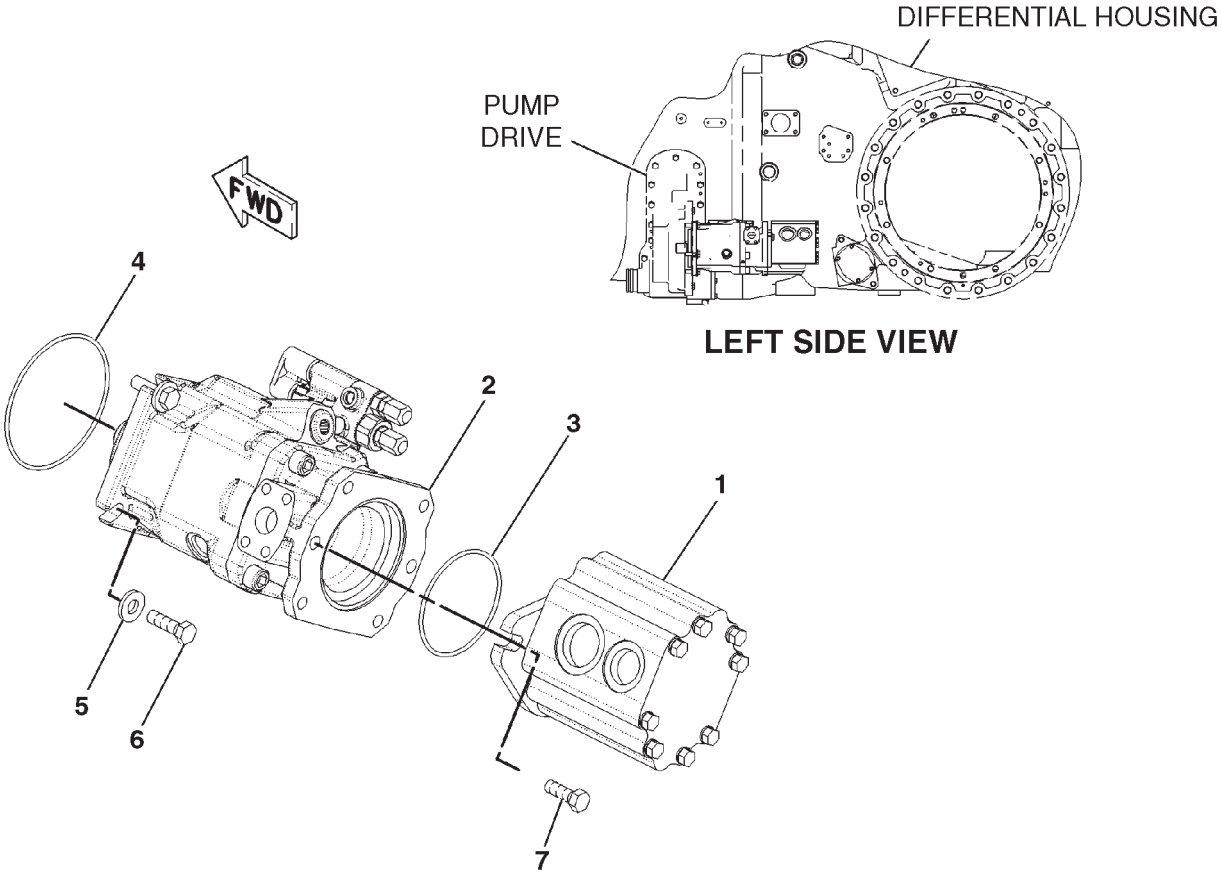

0850708A

PUMP & MOUNTING GP - 162-9804
(63CC IMPLEMENT PUMP)

ITEM	NUMBER	QTY	DESCRIPTION
-	162-9804	--	PUMP & MOUNTING GP [A] (NOT SERVICED)
1	CH206-6337	1	PUMP GP-GEAR (CHARGE) (SEE BREAKDOWN FOR COMPONENTS)
2	CH206-9019	1	PUMP GP-PISTON (IMPLEMENT) (SEE BREAKDOWN FOR COMPONENTS)
3	CH2H-3934	1	SEAL-O-RING (98.02IDX3.53DIA)
4	400101X1	1	SEAL-O-RING (126.61IDX3.53DIA)
5	400381X1	4	WASHER-HARD (13.5X30X4)
6	400050X1	4	BOLT (M12X1.75X40MM)
7	400064X1	2	BOLT (M12X1.75X35MM)

[A] PART OF 180-0184 PUMP AR-HYDRAULIC

0850708A
PR: t05i29k58b0388

PUMP & MOUNTING GP - 165-7901
(87CC IMPLEMENT PUMP)

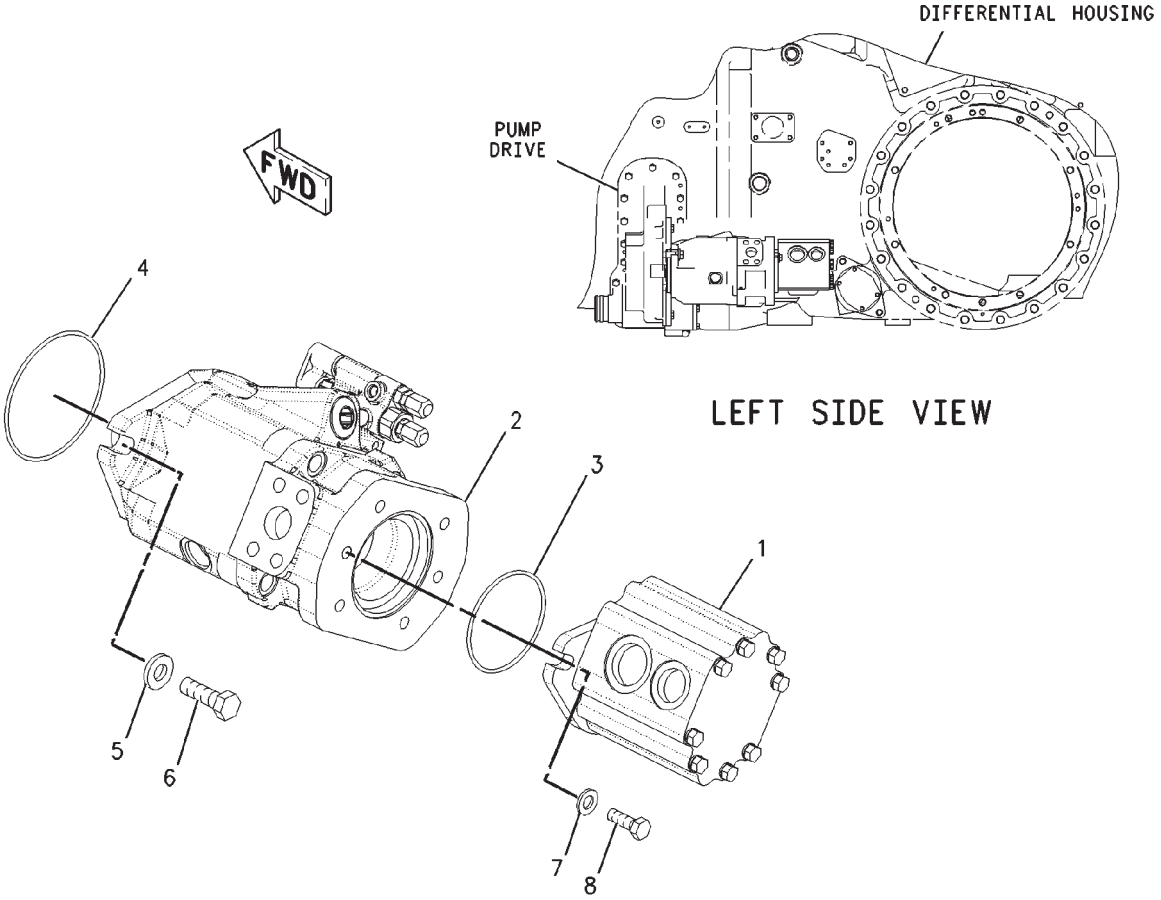

00850772

PUMP & MOUNTING GP - 165-7901
(87CC IMPLEMENT PUMP)

ITEM	NUMBER	QTY	DESCRIPTION
	165-7901		PUMP & MOUNTING GP [A] (NOT SERVICED)
1	CH206-6337	1	PUMP GP-GEAR (CHARGE) (SEE BREAKDOWN FOR COMPONENTS)
2	CH206-9017	1	PUMP GP-PISTON (IMPLEMENT) (SEE BREAKDOWN FOR COMPONENTS)
3	CH2H-3934	1	SEAL-O-RING
4	400101X1	1	SEAL-O-RING
5	CH7X-0515	2	WASHER-HARD (17X35X5)
6	400056X1	2	BOLT (M16X2X50MM)
7	400381X1	2	WASHER-HARD
8	400064X1	2	BOLT (M12X1.75X35MM)

[A] PART OF 180-0185 PUMP AR-HYDRAULIC

00850772
PR: t05i29k58b0389

PUMP & MTG GP-HYDRAULIC - 158-2397
SCAVENGE PUMP

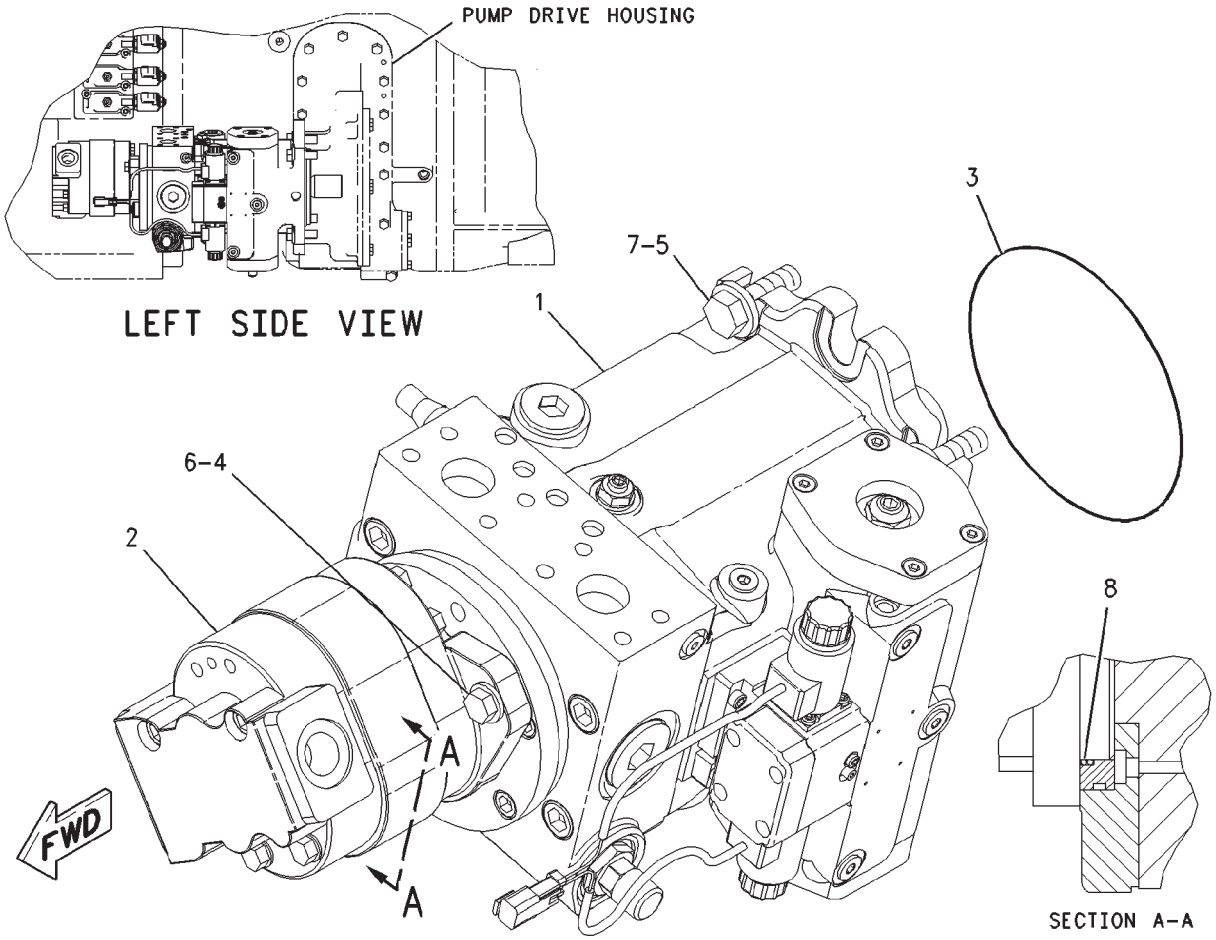

00830561

PUMP & MTG GP-HYDRAULIC - 158-2397

SCAVENGE PUMP

ITEM	NUMBER	QTY	DESCRIPTION
-	158-2397	--	PUMP & MTG GP-HYDRAULIC [A] (NOT SERVICED)
1	CH162-9592	1	PUMP GP-PISTON (SLIPPER) SEE BREAKDOWN FOR COMPONENTS)
2	CH207-3629	1	PUMP GP-GEAR (STER, IMPL & TMSN CHARGE) SEE BREAKDOWN FOR COMPONENTS)
3	CH8F-8733	1	SEAL-O-RING
4	400050X1	2	BOLT (M12X1.75X40MM)
5	400056X1	4	BOLT (M16X2X50MM)
6	400357X1	2	WASHER-HARD (M12X25.5X3)
7	CH7X-0515	4	WASHER-HARD (17X35X5)
8	CH6D-7146	1	SEAL-O-RING (101.27IDX2.62DIA) [B]

[A] PART OF 158-2342 HYDRAULIC AR

[B] THIS SEAL IS DELIVERED AS PART OF THE PUMP GP-PISTON. THE SEAL IS LISTED AS A SERVICE REPAIR PART IN CASE OF CUTTING THE SEAL AT INITIAL ASSEMBLY OR IN FIELD SERVICE.

00830561
PR: t05i29k58b0390

PUMP AR-HYDRAULIC - 180-0184
63CC IMPLEMENT PUMP HITCH

NO ILLUSTRATION

NOTIF

PUMP AR-HYDRAULIC - 180-0184

63CC IMPLEMENT PUMP HITCH

ITEM	NUMBER	QTY	DESCRIPTION
-	180-0184	--	PUMP AR-HYDRAULIC (NOT SERVICED)
1	162-9804	1	PUMP & MOUNTING GP (NOT SERVICED) SEE BREAKDOWN FOR COMPONENTS)
2	172-4518	1	LINES GP-IMPLEMENT (NOT SERVICED) SEE BREAKDOWN FOR COMPONENTS)
3	209-8325	1	LINES GP-HYDRAULIC (NOT SERVICED) SEE BREAKDOWN FOR COMPONENTS)

NOTIF
PR: t05i29k58b0391

PUMP AR-HYDRAULIC - 180-0185
87CC IMPLEMENT PUMP

NO ILLUSTRATION

NOTIF

PUMP AR-HYDRAULIC - 180-0185
87CC IMPLEMENT PUMP

ITEM	NUMBER	QTY	DESCRIPTION
-	502785D1	--	PUMP AR-HYDRAULIC (FIELD INSTALLED)
-	502907D1	--	PUMP AR-HYDRAULIC (FACT) (NOT SERVICED, ORDER FIELD INSTALLED)
-	180-0185	--	PUMP AR-HYDRAULIC [A] (NOT SERVICED, ORDER FIELD INSTALLED)
1	165-7901	1	PUMP & MOUNTING GP (NOT SERVICED) (SEE BREAKDOWN FOR COMPONENTS)
2	172-4519	1	LINES GP-IMPLEMENT (NOT SERVICED) (SEE BREAKDOWN FOR COMPONENTS)
3	209-8326	1	LINES GP-HYDRAULIC (NOT SERVICED) (SEE BREAKDOWN FOR COMPONENTS)

[A] PART OF: 500033D1; 500034D1; 500035D1; 500037D1 BASE UNIT AR; 502785D1; 502907D1 PUMP AR-HYD

NOTIF
PR: t05i29k58b0392

PUMP GP-GEAR - CH206-6337
STEERING, IMPLEMENT & TRANS CHARGE

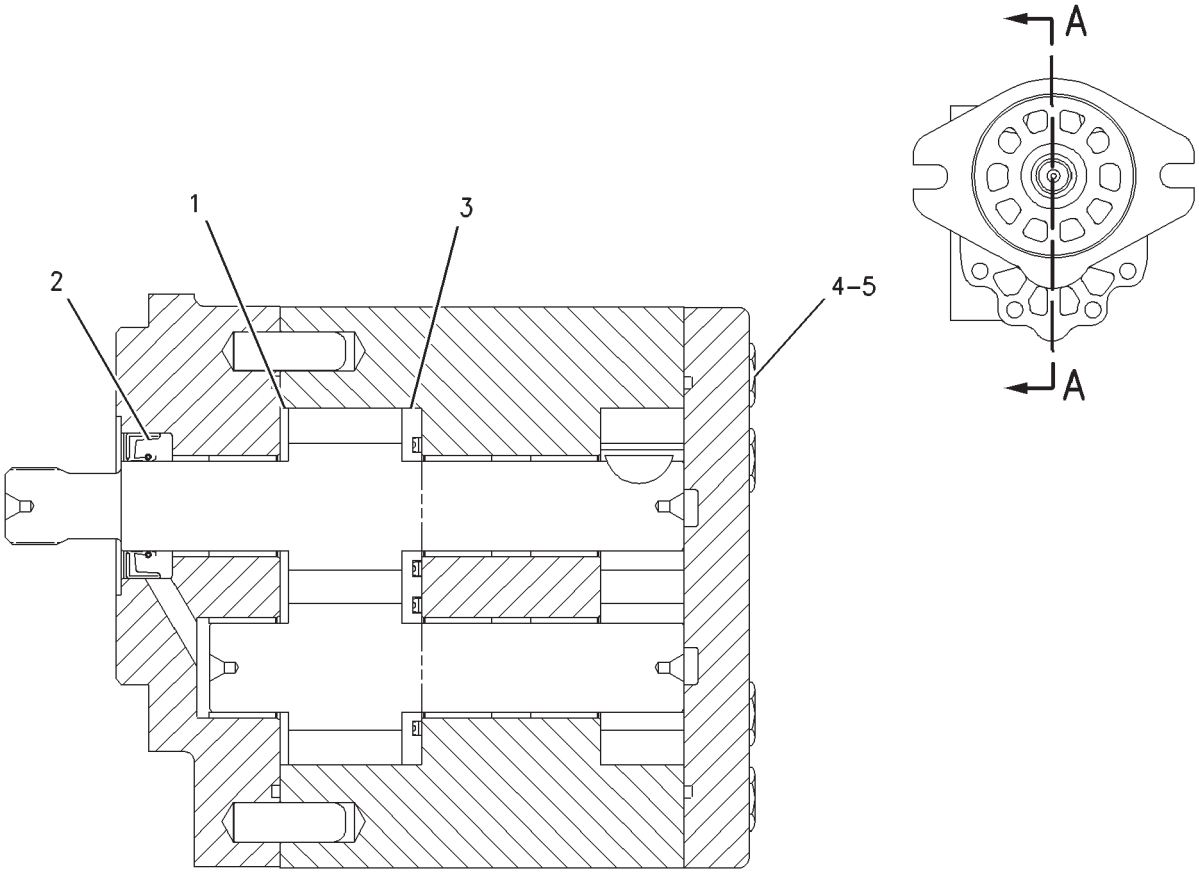

SECTION A-A

00896358

PUMP GP-GEAR - CH206-6337

STEERING, IMPLEMENT & TRANS CHARGE

ITEM	NUMBER	QTY	DESCRIPTION
-	CH206-6337	--	PUMP GP-GEAR [A]
1	CH077-5261	1	PLATE-THRUST
2	CH202-2593	1	SEAL-SHAFT
	CH202-2595	1	KIT-SEAL (CHARGE PUMP)
3	CH202-2592	1	PLATE-WEAR
4	CH8C-7323	8	BOLT (3/8-16X6 IN)
5	CH8T-4896	8	WASHER-HARD (10.2X18.5X2.5)

[A] PART OF 162-9804; 165-7901 PUMP & MOUNTING GP

00896358
PR: t05i29k58b0393

PUMP GP-GEAR - CH207-3629

SCAVANGE PUMP
STEERING, IMPLEMENT & TRANS CHARGE

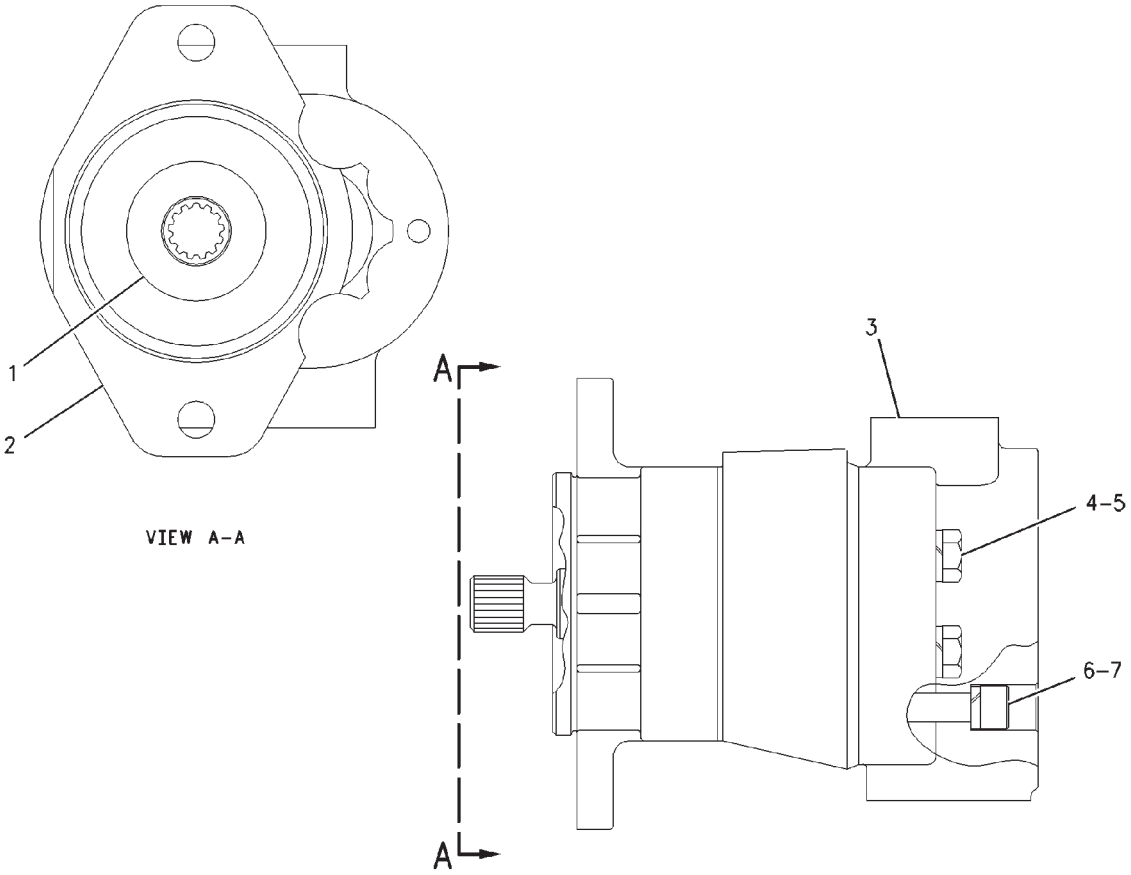

00852392

PUMP GP-GEAR - CH207-3629

SCAVANGE PUMP
STEERING, IMPLEMENT & TRANS CHARGE

ITEM	NUMBER	QTY	DESCRIPTION
-	CH207-3629	--	PUMP GP-GEAR [A]
1	CH4M-7668	1	SEAL-LIP [B]
2	CH209-9079	1	FLANGE
3	CH209-9078	1	COVER
4	CH5P-8244	4	WASHER (12X22.5X2.5)
5	CH9F-2491	4	BOLT (7/16-14X3.75 IN)
6	CH210-0780	4	WASHER
7	CH194-8673	4	BOLT-SOCKET HEAD
-	CH210-0179	1	KIT-SEAL

[A] PART OF 158-2397 PUMP & MTG GP-HYD
[B] INCLUDED IN SEAL KIT

00852392
PR: t05i29k58b0394

PUMP GP-PISTON - CH162-9592
SCAVENGE PUMP SLIPPER

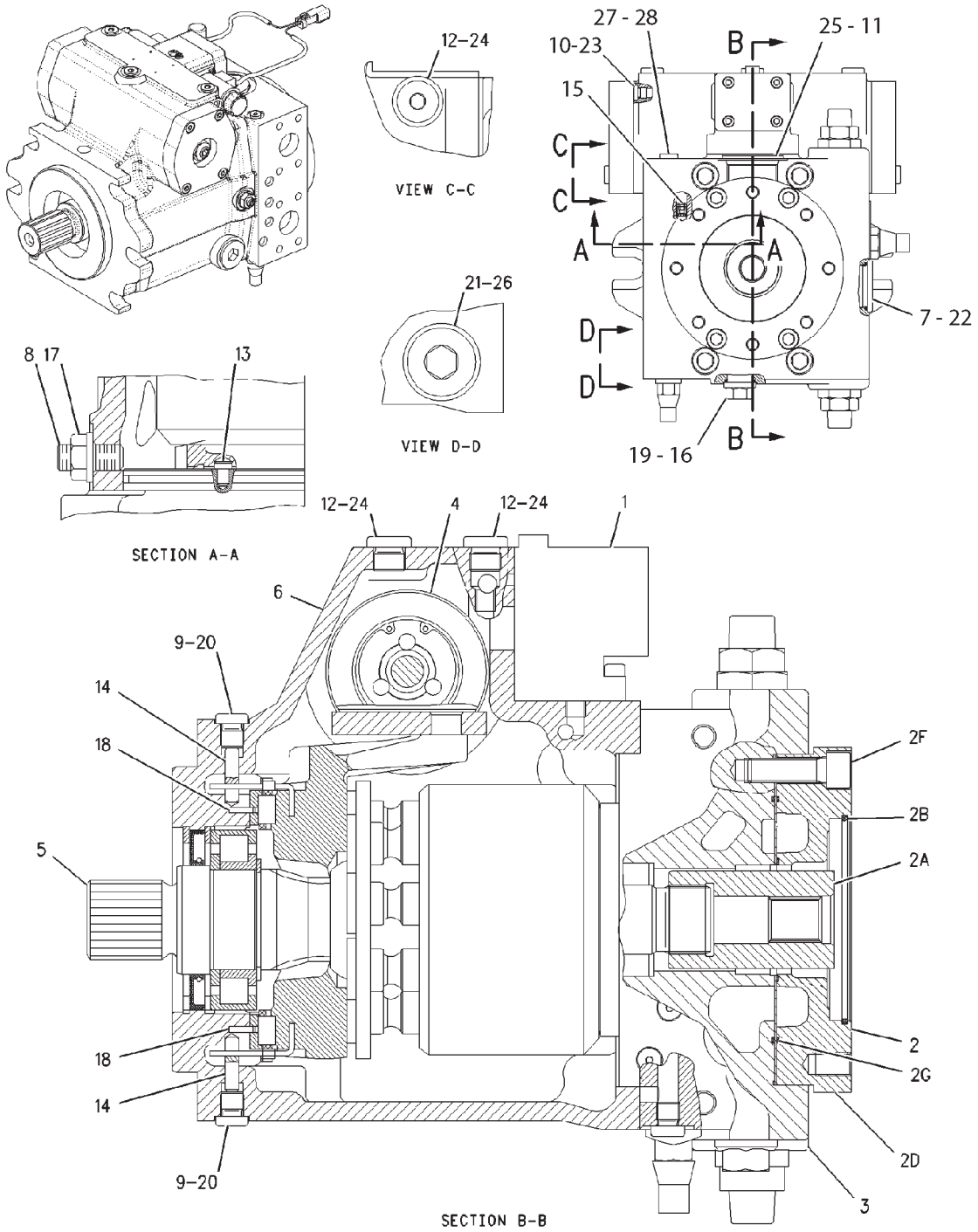

1629592A

PUMP GP-PISTON - CH162-9592
SCAVENGE PUMP SLIPPER

ITEM	NUMBER	QTY	DESCRIPTION
-	CH162-9592	--	PUMP GP-PISTON [A]
1	205-6412	1	VALVE GP-SERVO
			(SEE BREAKDOWN FOR COMPONENTS)
2	502536D1	1	DRIVE ASM (INCLUDES ITEMS 2A THRU 2G)
2A	CH205-6395	1	COUPLING
2B	CH3K-0715	1	SEAL-O-RING
2D	502537D1	1	FLANGE
2F	400210X1	4	BOLT-SOCKET HEAD (M12X1.75X40MM)
2G	CH8C-5237	2	SEAL-O-RING
3	205-6398	1	HEAD GP-PUMP
			(SEE BREAKDOWN FOR COMPONENTS)
4	CH183-8430	1	ACTUATOR GP-PISTON PUMP
			(SEE BREAKDOWN FOR COMPONENTS)
5	205-6400	1	ROTATING GP-PUMP
			(SEE BREAKDOWN FOR COMPONENTS)
6	CH183-8454	1	HOUSING
7	CH096-6095	1	PLUG
8	CH123-7582	1	PIN-THREADED
9	CH135-8854	3	PLUG
10	CH137-3780	2	PLUG (M10)
11	CH6K-6307	1	SEAL-O-RING
12	400318X1	4	SEAL-O-RING (11.89ID X 1.98 DIA)
13	205-6399	1	PIN-ECCENTRIC
14	CH6E-4351	2	PIN
15	CH126-1645	1	ORIFICE
16	502535D1	1	PLUG
17	CH6E-4385	1	LOCKNUT
18	CH6E-4614	2	PIN
19	CH6V-5326	1	SEAL-O-RING
20	CH6V-9028	2	SEAL-O-RING
21	400376X1	1	SEAL-O-RING
22	CH8C-5193	1	SEAL-O-RING
23	CH8T-7876	2	SEAL-O-RING
24	CH9S-8004	4	PLUG
25	CH5P-7684	1	PLUG
26	400357X1	1	PLUG
27	CH9S-8002	1	PLUG
28	400361X1	1	SEAL-O-RING (8.92ID X 1.83DIA)

[A] PART OF 158-2397 PUMP & MTG
GP-HYDRAULIC

1629592A
PR: t05i29k58b0395

PUMP GP-PISTON - CH206-9017
87CC IMPLEMENT

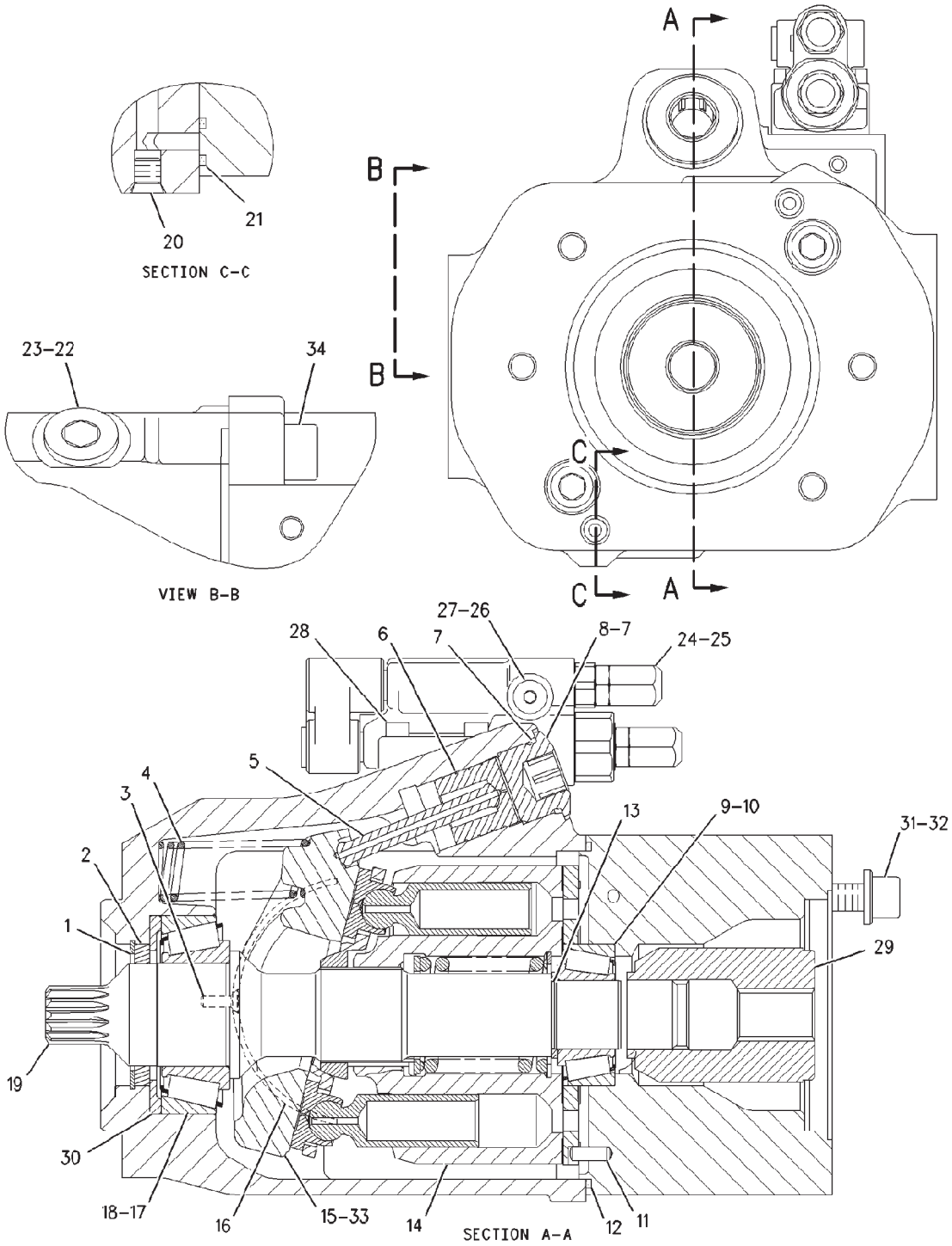

00893848

PUMP GP-PISTON - CH206-9017

87CC IMPLEMENT

ITEM	NUMBER	QTY	DESCRIPTION
-	CH206-9017	--	PUMP GP-PISTON [A]
1	CH140-1739	1	RING-RETAINING
2	CH105-1632	1	SEAL
3	CH6R-7943	2	SCREW (M5X15.5MM)
4	CH190-6519	1	SPRING
5	CH190-3120	1	LINK
6	214-9201	1	PISTON
7	CH6V-8978	1	SEAL-O-RING
8	CH190-6518	1	PLUG
9	CH105-3033	1	CUP-BEARING
10	CH105-3032	1	CONE-BEARING
11	CH9X-8979	1	DOWEL
12	CH4V-2445	1	SEAL-O-RING
13	CH105-1638	1	SPACER
14	190-3118	1	ROTATING GP-PUMP (SEE BREAKDOWN FOR COMPONENTS)
15	CH190-6516	1	SWASHPLATE
16	CH190-6523	2	BEARING
17	CH3B-2263	1	CUP-BEARING
18	CH105-3031	1	CONE-BEARING
19	214-9202	1	SHAFT
20	CH136-8423	3	PLUG-BREAK OFF
21	CH168-3504	2	SEAL
22	CH9S-8008	1	PLUG
23	400416X1	1	SEAL-O-RING
24	214-9379	1	VALVE GP-PRESS & FLOW CMPNSTR (SEE BREAKDOWN FOR COMPONENTS)
25	CH9X-7680	3	SEAL-O-RING
26	CH9S-8002	1	PLUG
27	400361X1	1	SEAL-O-RING (8.92ID X 1.83DIA)
28	400246X1	1	BOLT-SOCKET HEAD (M6X1X30MM)
29	CH194-6848	1	COUPLER
30	CH190-6520	1	STOP
31	400220X1	2	BOLT-HEX SOCKET (M12X1.75X30MM)
32	400357X1	2	WASHER-HARD (M12X25.5X3)
33	CH214-9203	1	PLUG-ORIFICE
34	400238X1	4	BOLT-SOCKET HEAD (M16X2X55MM)

[A] PART OF 165-7901 PUMP & MOUNTING GP

00893848
PR: t05i29k58b0396

PUMP GP-PISTON (SLIPPER) - CH206-9019
63CC IMPLEMENT

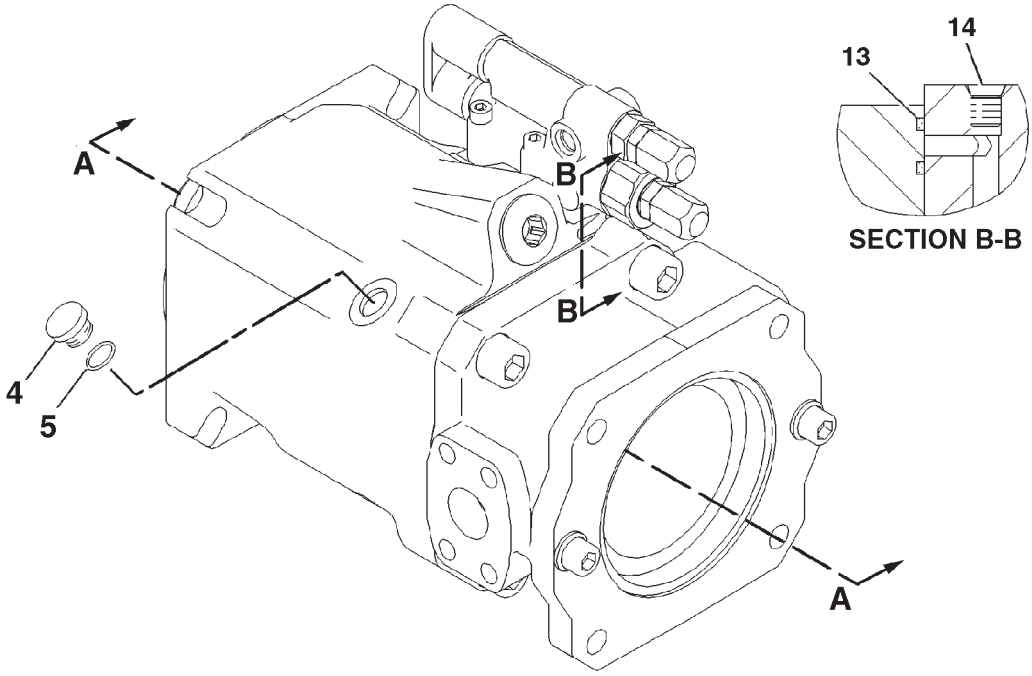

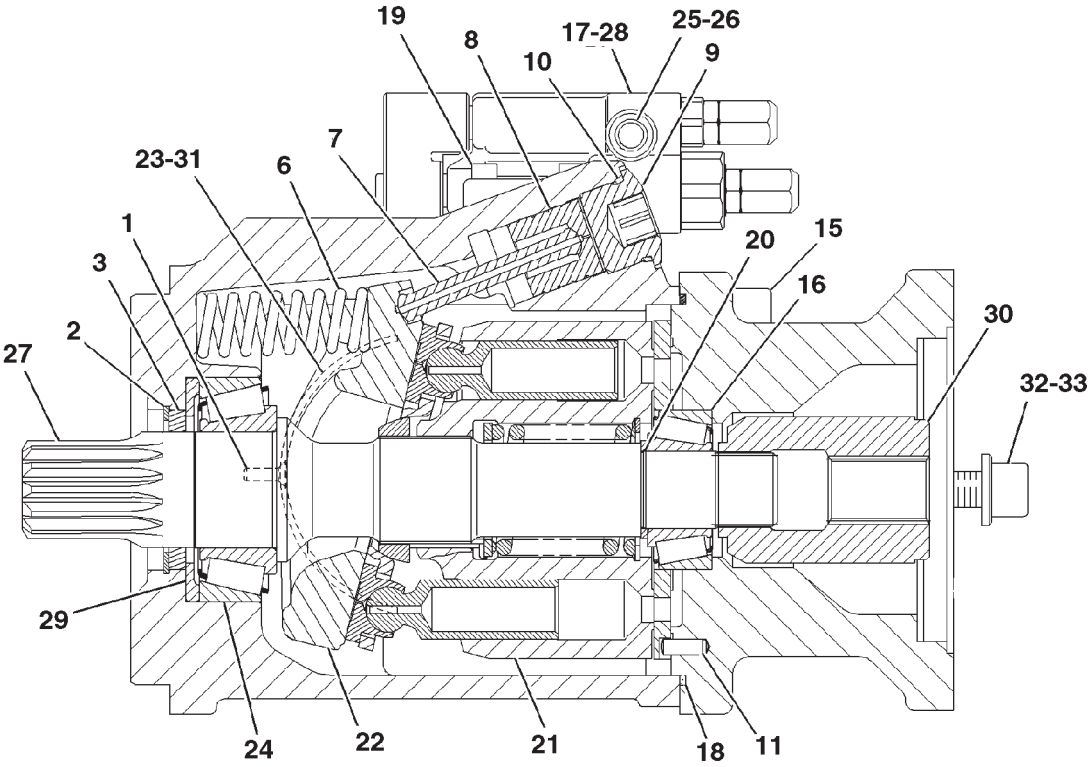

SECTION A-A

0893755A

PUMP GP-PISTON (SLIPPER) - CH206-9019

63CC IMPLEMENT

ITEM	NUMBER	QTY	DESCRIPTION
-	CH206-9019	--	PUMP GP- PISTON [A]
1	CH6R-7943	2	SCREW (M5X15.5MM)
2	CH180-6213	1	RING-RETAINING
3	CH168-7319	1	SEAL-SHAFT
4	400374X1	1	PLUG
5	400319X1	1	SEAL-O-RING
6	CH168-2197	1	SPRING
7	CH168-2198	1	LINK-CONTROL
8	CH174-9994	1	PISTON-CONTROL
9	CH168-7863	1	PLUG-CONTROL
10	CH8T-7525	1	SEAL-O-RING
11	CH9X-8979	1	DOWEL
13	CH168-3504	2	SEAL
14	CH136-8423	2	PLUG-BREAK OFF
15	CH095-0687	4	BOLT-SOCKET HEAD
16	CH185-0296	1	BEARING
17	CH9X-7680	3	SEAL-O-RING
18	CH117-8801	1	SEAL-O-RING
19	400246X1	4	BOLT-SOCKET HEAD (M6X1X30MM)
20	CH168-2203	1	SHIM-SHAFT
21	190-6501	1	ROTATING GP-PUMP (SEE BREAKDOWN FOR COMPONENTS)
22	CH168-7317	1	SWASHPLATE-PUMP
23	214-9207	1	BEARING (RIGHT HAND)
24	CH185-0295	1	BEARING
25	CH9S-8002	1	PLUG
26	400361X1	1	SEAL-O-RING
27	214-9204	1	SHAFT
28	214-9379	1	VALVE GP-PRESS & FLOW CMPNSTR (SEE BREAKDOWN FOR COMPONENTS)
29	CH190-6507	1	STOP
30	214-9205	1	COUPLING-SHAFT
31	214-9206	1	BEARING (LEFT HAND)
32	400220X1	2	BOLT-HEX SOCKET (M12X1.75X30MM)
33	400357X1	2	WASHER-HARD (M12X25.5X3)

[A] PART OF 162-9804 PUMP & MOUNTING GP

0893755A
PR: t05i29k58b0397

ROTATING GP-PUMP - 190-3118
87CC IMPLEMENT PUMP

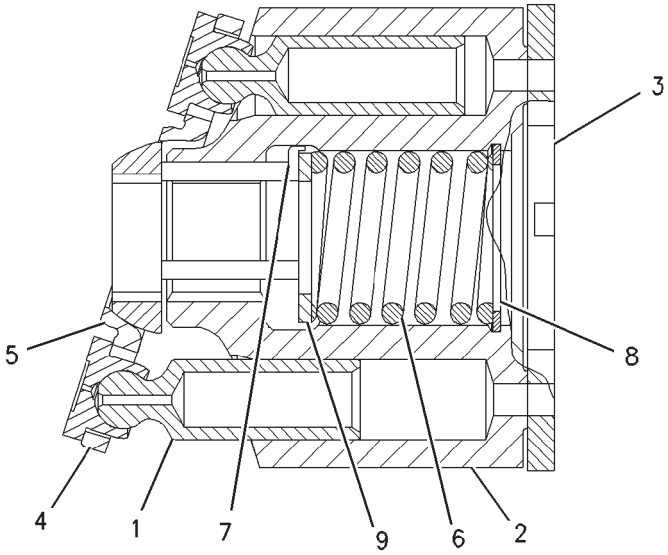

VIEW A-A

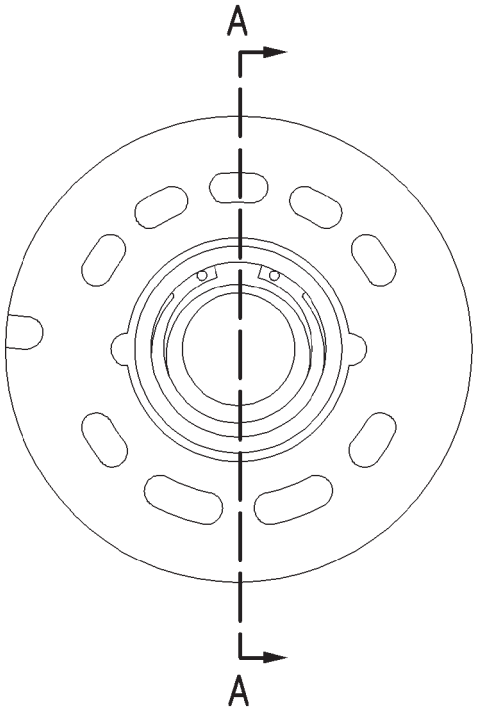

ROTATION = LEFT

ROTATING GP-PUMP - 190-3118
87CC IMPLEMENT PUMP

ITEM	NUMBER	QTY	DESCRIPTION
-	190-3118	--	ROTATING GP-PUMP [A]
1	CH105-1646	9	PISTON-PUMP
2	190-6526	1	BARREL
3	190-6525	1	PLATE
4	CH188-9637	1	PLATE-RETRACTION
5	CH105-1648	1	BEARING
6	CH105-1651	1	SPRING
7	CH190-6528	3	PIN
8	CH6E-3343	1	RING
9	CH105-1650	1	SPACER-BARREL

[A] PART OF CH206-9017 PUMP GP-PISTON

00750133
PR: t05i29k58b0398

ROTATING GP-PUMP - 190-6501
63CC IMPLEMENT PUMP

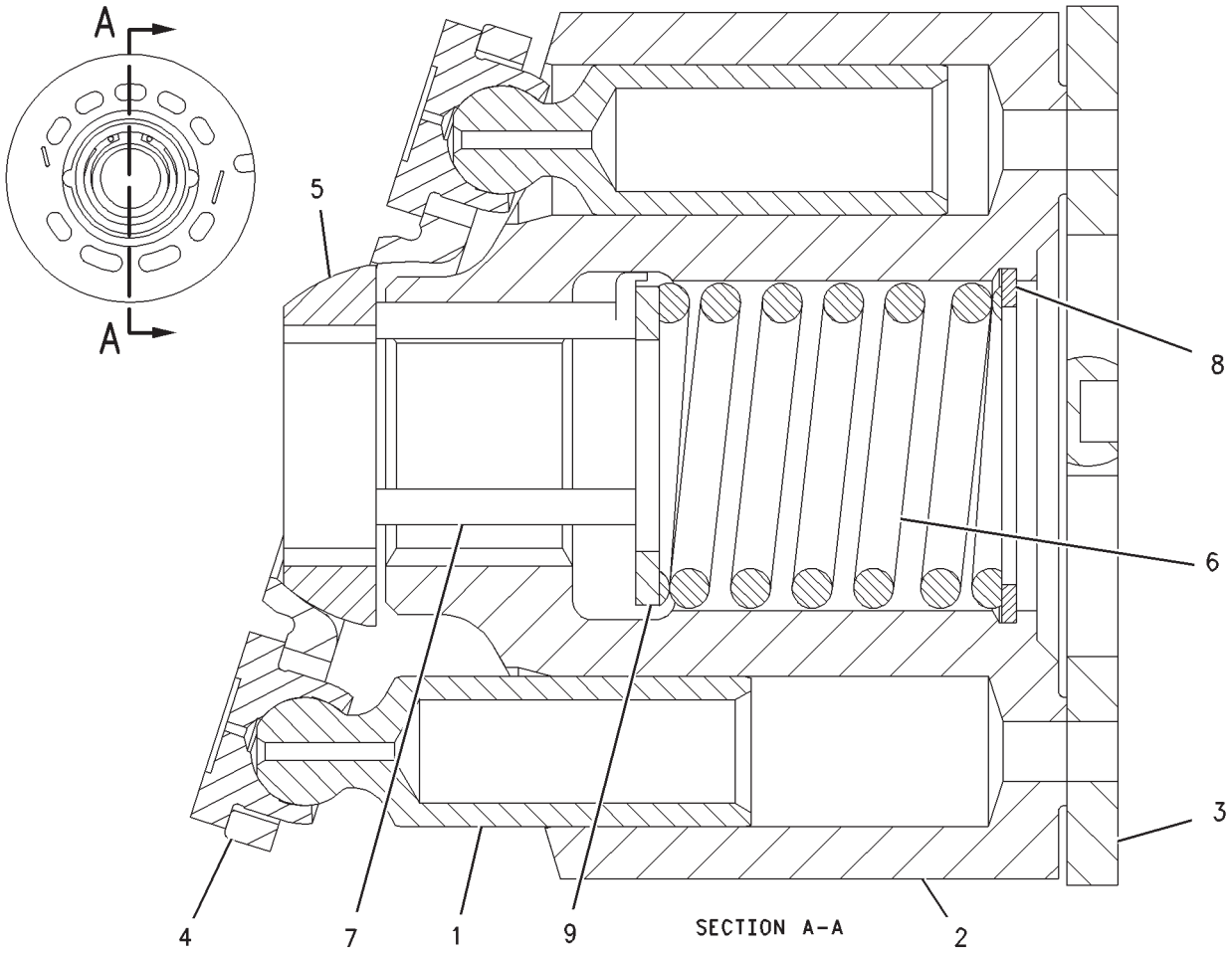

00750145

ROTATING GP-PUMP - 190-6501
63CC IMPLEMENT PUMP

ITEM	NUMBER	QTY	DESCRIPTION
-	190-6501	--	ROTATING GP-PUMP [A]
1	CH168-3384	9	PISTON-PUMP
2	CH168-3380	1	BARREL-CYLINDER
3	CH190-6508	1	PLATE
4	CH168-3385	1	PLATE-RETRACTION
5	CH168-3378	1	BEARING-SPHERICAL
6	CH168-3381	1	SPRING
7	CH168-3379	3	PIN
8	CH6V-7723	1	RING-RETAINING
9	CH168-3382	1	WASHER

[A] PART OF 206-9019 PUMP GP-PISTON

00750145
PR: t05i29k58b0399

ROTATING GP-PUMP - 205-6400
SCAVENGE PUMP

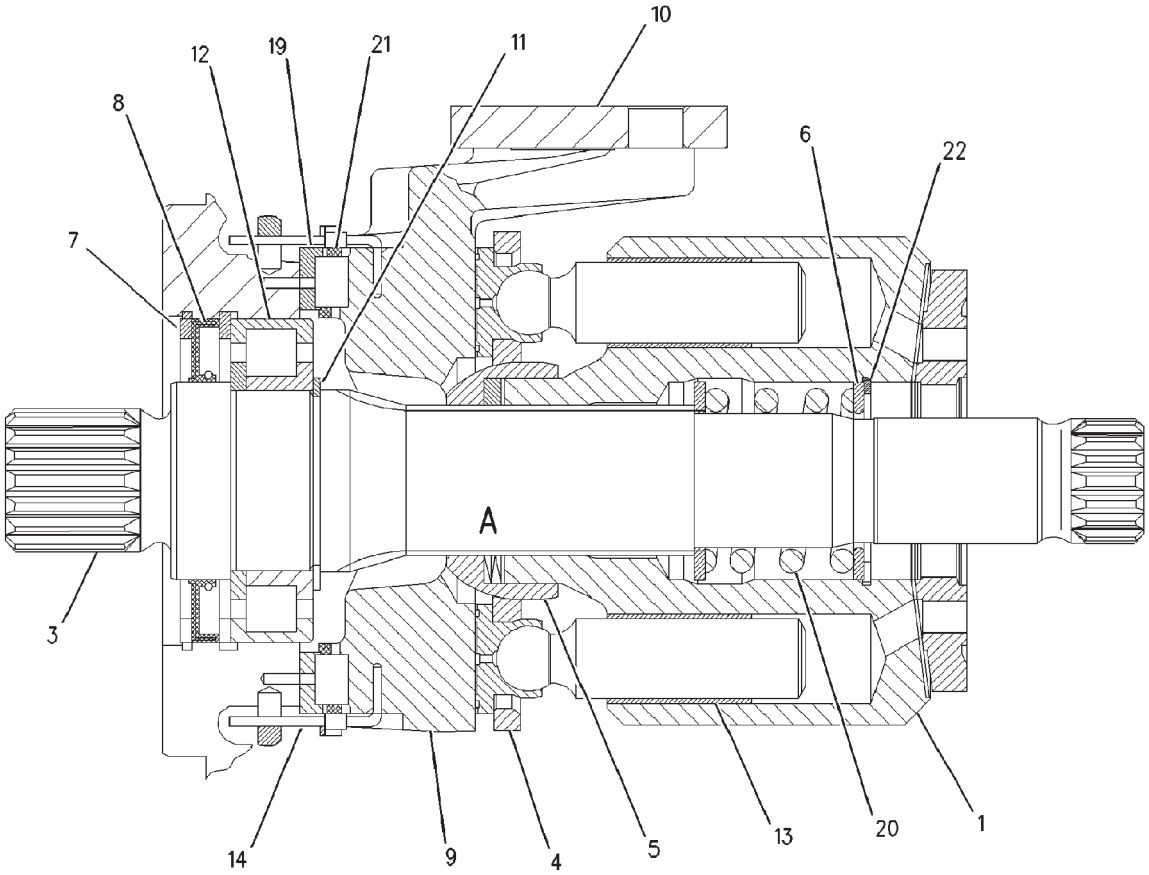

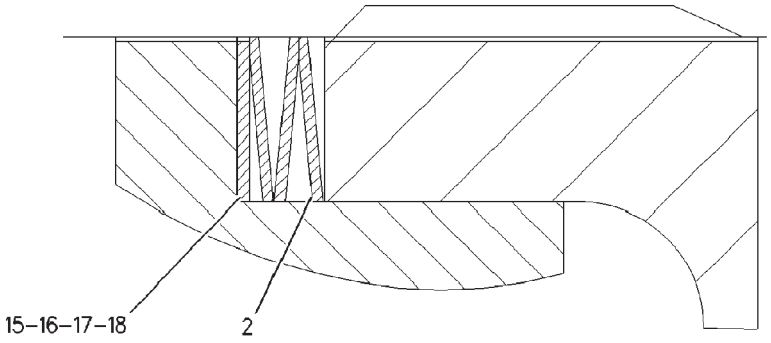

VIEW OF AREA A

ROTATING GP-PUMP - 205-6400
SCAVENGE PUMP

ITEM	NUMBER	QTY	DESCRIPTION
-	205-6400	--	ROTATING GP-PUMP [A]
1	CH183-8446	1	BARREL
2	CH183-8447	1	SPRING
3	192-0938	1	SHAFT
4	CH183-8449	1	PLATE
5	CH183-8450	1	BALL
6	CH183-8451	2	WASHER
7	CH183-8452	2	RING-RETAINING
8	CH183-8453	1	RING-SEAL
9	CH122-6606	1	SWASHPLATE
10	CH122-6607	1	LEVER
11	CH141-0243	1	RING-SNAP
12	CH6E-1571	1	BEARING
13	CH6E-4358	9	PISTON
14	CH6E-4363	2	ROD
15	CH6E-4364		SHIM (1.2)
16	CH6E-4365		SHIM (1)
17	CH6E-4366		SHIM (.8)
18	CH6E-4367		SHIM (.6)
19	CH6E-4370	1	GUIDE
20	CH6E-4373	1	SPRING
21	CH6E-4374	1	BEARING
22	CH9X-2858	1	RING-RETAINING

[A] PART OF CH162-9592 PUMP GP-PISTON

00853757
PR: t05i29k58b0400

VALVE AR - 193-8197
W/O HITCH & W/O HYDRAULIC TRAILER BRAKE

NO ILLUSTRATION

NOTIF

VALVE AR - 193-8197

W/O HITCH & W/O HYDRAULIC TRAILER BRAKE

ITEM	NUMBER	QTY	DESCRIPTION
-	193-8197	--	VALVE AR [A] (NOT SERVICED)
1	192-4707	1	VALVE GP-CONTROL (SEE BREAKDOWN FOR COMPONENTS)
2	193-1548	1	MOUNTING GP-VALVE (NOT SERVICED) (SEE BREAKDOWN FOR COMPONENTS)

NOTIF
PR: t05i29k58b0401

VALVE AR - 501070D1
W/O HITCH & W/HYDRAULIC TRAILER BRAKE

NO ILLUSTRATION

NOTIF

VALVE AR - 501070D1

W/O HITCH & W/HYDRAULIC TRAILER BRAKE

ITEM	NUMBER	QTY	DESCRIPTION
-	501070D1	--	VALVE AR [A] (NOT SERVICED)
	162-9805	1	MOUNTING GP-VALVE (NOT SERVICED) (SEE BREAKDOWN FOR COMPONENTS)
	192-4816	1	VALVE GP-BANK 2 (SEE BREAKDOWN FOR COMPONENTS)
-	501130D1	--	LINES GP-HYDRAULIC OIL (NOT SERVICED) (SEE BREAKDOWN FOR COMPONENTS)

NOTIF
PR: t05i29k58b0402

VALVE AR - 193-8198

W/HITCH & W/O HYDRAULIC TRAILER BRAKE
ROW & EAME

NO ILLUSTRATION

NOTIF15

VALVE AR - 193-8198

W/HITCH & W/O HYDRAULIC TRAILER BRAKE
ROW & EAME

ITEM	NUMBER	QTY	DESCRIPTION
-	193-8198	--	VALVE AR [A] (NOT SERVICED)
1	192-4708	1	VALVE GP-BANK 3 (PRIORITY W/HITCH) (SEE BREAKDOWN FOR COMPONENTS)
2	193-1548	1	MOUNTING GP-VALVE (NOT SERVICED) (SEE BREAKDOWN FOR COMPONENTS)

NOTIF15
PR: t05i29k58b0403

VALVE AR - 193-8199

W/O HITCH & W/HYDRAULIC TRAILER BRAKE
EAME ONLY

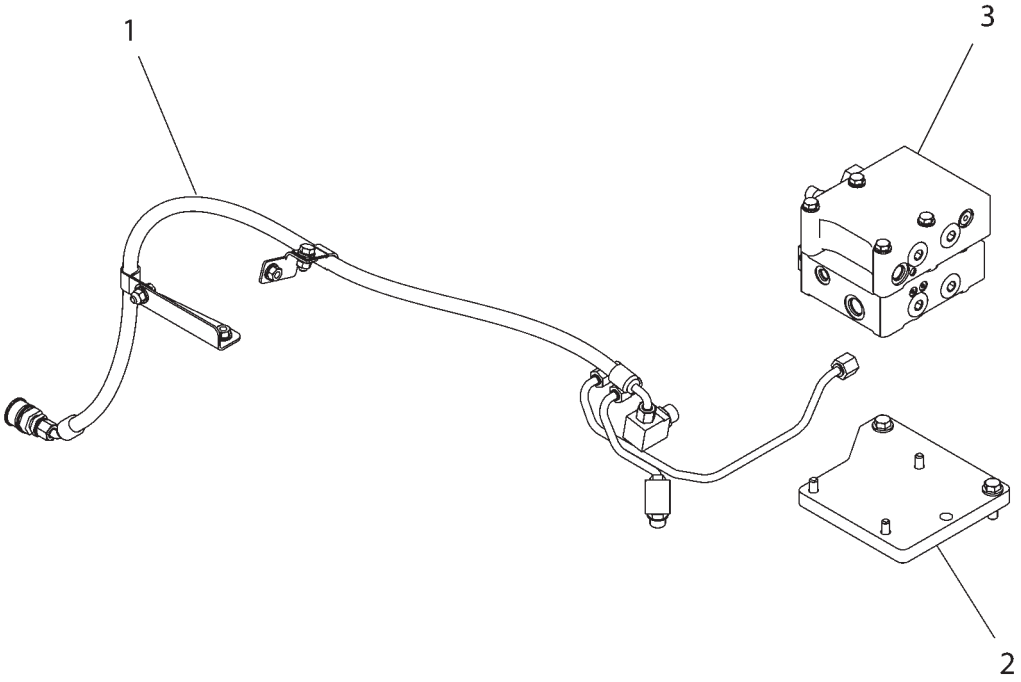

1938199C

VALVE AR - 193-8199

W/O HITCH & W/HYDRAULIC TRAILER BRAKE
EAME ONLY

ITEM	NUMBER	QTY	DESCRIPTION
-	193-8199	--	VALVE AR [A] (NOT SERVICED)
1	192-4816	1	VALVE GP-CONTROL (SEE BREAKDOWN FOR COMPONENTS)
2	162-9805	1	MOUNTING GP-VALVE (NOT SERVICED) (SEE BREAKDOWN FOR COMPONENTS)
3	193-1558	1	LINES GP-HYDRAULIC (NOT SERVICED) (SEE BREAKDOWN FOR COMPONENTS)

[A] PART OF 209-3688 KIT-HYD TR BRAKE

1938199C
PR: t05i29k58b0404

VALVE AR - 193-8200

W/HITCH & W/HYDRAULIC TRAILER BRAKE
EAME ONLY

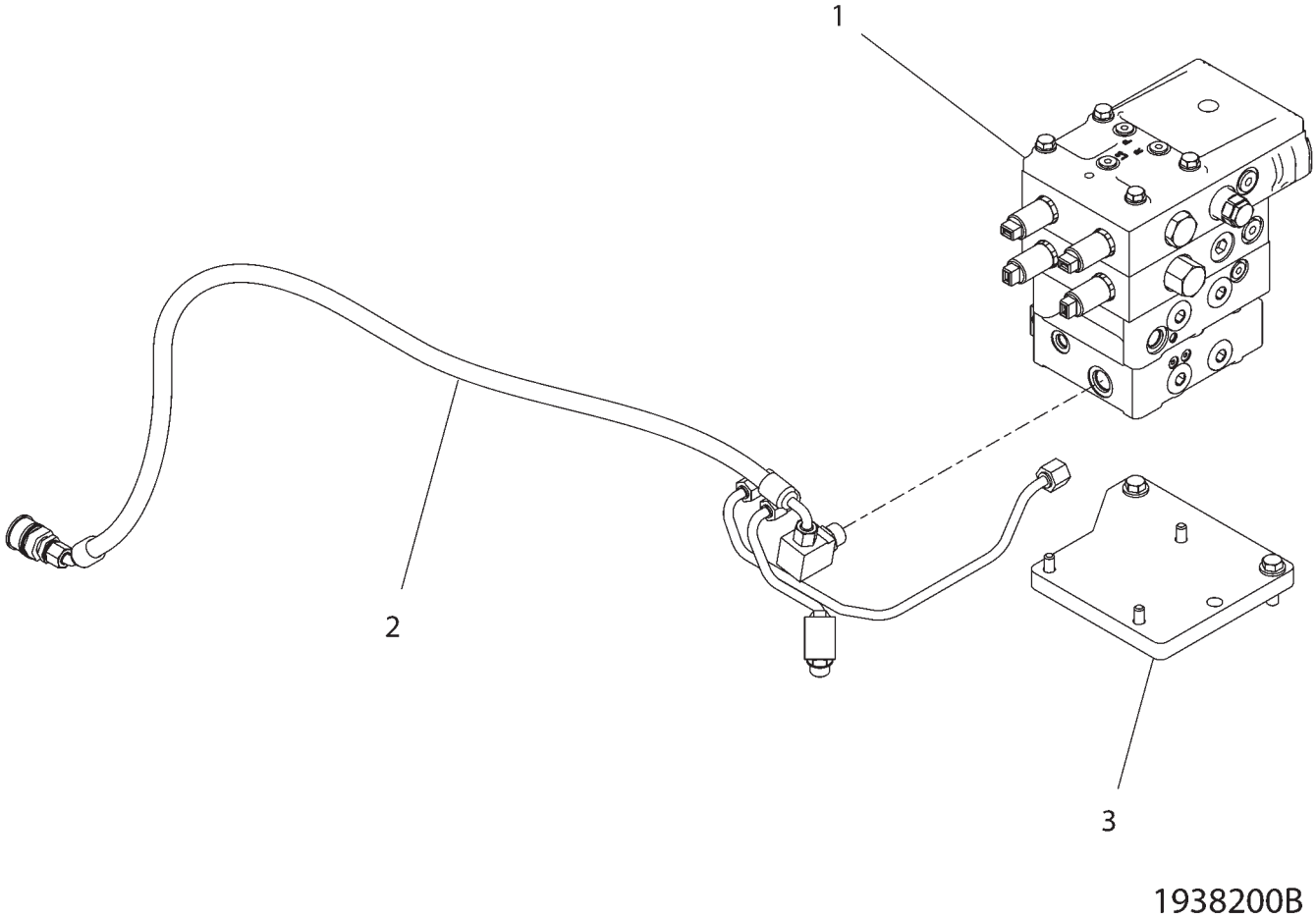

VALVE AR - 193-8200

W/HITCH & W/HYDRAULIC TRAILER BRAKE
EAME ONLY

ITEM	NUMBER	QTY	DESCRIPTION
-	193-8200	--	VALVE AR [A] (NOT SERVICED)
1	192-4817	1	VALVE GP-BANK 4 (SEE BREAKDOWN FOR COMPONENTS)
2	193-1558	1	LINES GP-HYDRAULIC OIL (NOT SERVICED) (SEE BREAKDOWN FOR COMPONENTS)
3	162-9805	1	MOUNTING GP-VALVE (NOT SERVICED) (SEE BREAKDOWN FOR COMPONENTS)

[A] PART OF 186-0979; 189-3300
HITCH AR-3 POINT

1938200B
PR: t05i29k58b0405

VALVE AR-BANK 4 - 180-1434

NO ILLUSTRATION

NOTIF

VALVE AR-BANK 4 - 180-1434

ITEM	NUMBER	QTY	DESCRIPTION
-	180-1434	--	VALVE AR-BANK 4 (NOT SERVICED)
1	152-0443	1	CONTROL GP-IMPLEMENT (NOT SERVICED) (SEE BREAKDOWN FOR COMPONENTS)
2	180-0494	1	VALVE GP-BANK 4 (NOT SERVICED) (SEE BREAKDOWN FOR COMPONENTS)
3	502214D1	1	LINES GP-ECOLOGY (NOT SERVICED) (SEE BREAKDOWN FOR COMPONENTS)

NOTIF
PR: t05i29k58b0406

VALVE AR - 180-1438
5 IMPLEMENTS

NO ILLUSTRATION

NOTIF

VALVE AR - 180-1438
5 IMPLEMENTS

ITEM	NUMBER	QTY	DESCRIPTION
-	180-1438	--	VALVE AR-IMPL-5 (NOT SERVICED)
1	180-0495	1	VALVE GP-BANK 5 (SEE BREAKDOWN FOR COMPONENTS)
2	166-4590	1	CONTROL GP-IMPLEMENT (NOT SERVICED) (SEE BREAKDOWN FOR COMPONENTS)
3	136-5670	1	CONTROL & WIRING GP (NOT SERVICED) (SEE BREAKDOWN FOR COMPONENTS)
4	502214D1	1	LINES GP-ECOLOGY (NOT SERVICED) (SEE BREAKDOWN FOR COMPONENTS)

NOTIF
PR: t05i29k58b0407

VALVE AR-IMPL - 500795D1
6 IMPLEMENTS

NO ILLUSTRATION

NOTIF

VALVE AR-IMPL - 500795D1
6 IMPLEMENTS

ITEM	NUMBER	QTY	DESCRIPTION
-	500795D1	--	VALVE AR-BANK 6 (NOT SERVICED)
1	136-5670	1	CONTROL & WIRING GP (NOT SERVICED) (SEE BREAKDOWN FOR COMPONENTS)
2	500752D1	1	VALVE GP-BANK 6 (NOT SERVICED) (SEE BREAKDOWN FOR COMPONENTS)
3	502214D1	1	LINES GP-ECOLOGY (NOT SERVICED) (SEE BREAKDOWN FOR COMPONENTS)

NOTIF
PR: t05i29k58b0408

VALVE GP-BANK 2 - 192-4816
PRIORITY W/HYDRAULIC TRAILER BRAKE

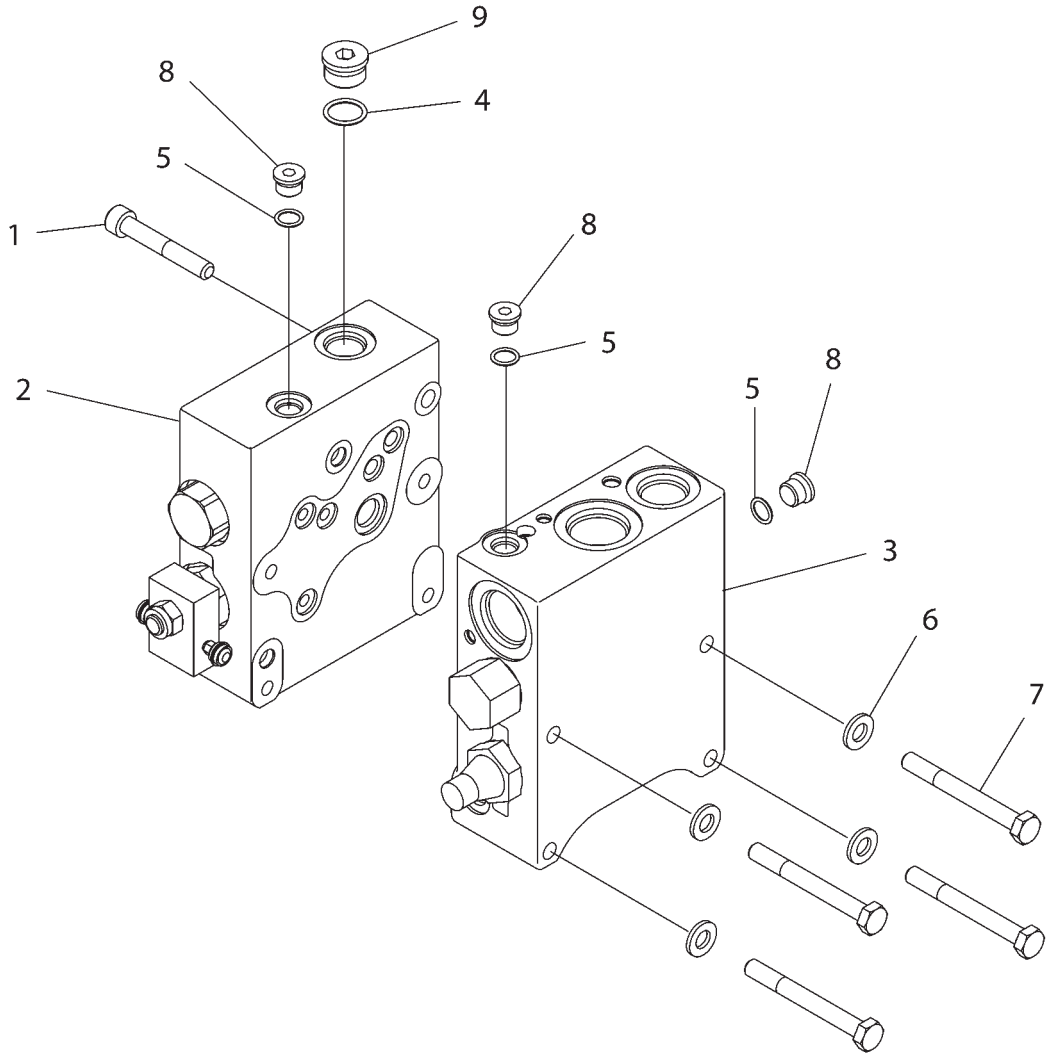

1924816F

VALVE GP-BANK 2 - 192-4816
PRIORITY W/HYDRAULIC TRAILER BRAKE

ITEM	NUMBER	QTY	DESCRIPTION
-	192-4816	--	VALVE GP-BANK 2 [A]
1	CH8T-2392	1	BOLT-HSHD (M10X1.5X65MM)
2	196-2318	1	VALVE GP-BRAKE CONTROL (HYD TRAILER BR) (SEE BREAKDOWN FOR COMPONENTS)
3	209-5020	1	VALVE GP-CONTROL (PRIORITY) (SEE BREAKDOWN FOR COMPONENTS)
4	400319X1	1	SEAL-O-RING (19.18 X 2.46 DIA)
5	400318X1	3	SEAL-O-RING (11.89 X 1.98 DIA)
6	400287X1	4	WASHER-HARD (11X21X2.5)
7	400225X1	4	BOLT-HEX HEAD (M10X1.5X90MM)
8	CH9S-8004	3	PLUG
9	400374X1	1	PLUG

[A] PART OF:
193-8199 VALVE AR
501070D1 VALVE AR
501140D1 VALVE AR

1924816F
PR: t05i29k58b0409

VALVE GP-BANK 3 - 192-4708
PRIORITY WITH HITCH

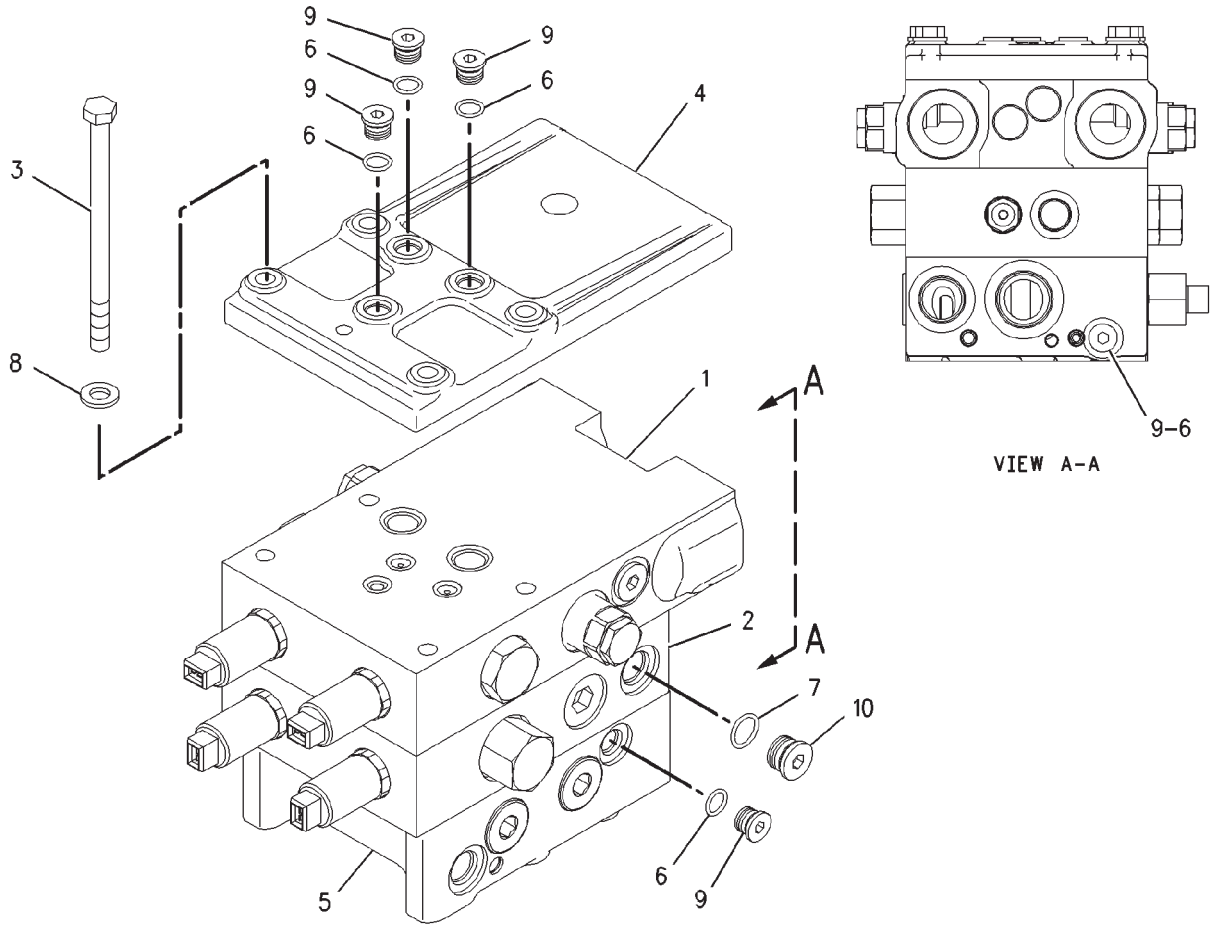

00880872

VALVE GP-BANK 3 - 192-4708
PRIORITY WITH HITCH

ITEM	NUMBER	QTY	DESCRIPTION
-	192-4708	--	VALVE GP-BANK 3 [A]
1	162-9817	1	VALVE GP-CONTROL (STEERABLE HITCH) (SEE BREAKDOWN FOR COMPONENTS)
2	162-9818	1	VALVE GP-CONTROL (3 POINT HITCH) (SEE BREAKDOWN FOR COMPONENTS)
3	CH178-3333	4	BOLT-HEX HEAD (M10X1.5X155MM)
4	180-0500	1	COVER-END
5	209-5019	1	VALVE GP-CONTROL (PRIORITY & ACCUMULATOR CHARGE) (SEE BREAKDOWN FOR COMPONENTS)
6	400318X1	5	SEAL-O-RING (11.89ID X 1.98 DIA)
7	CH3K-0360	1	SEAL-O-RING
8	CH8T-4121	4	WASHER-HARD (11X21X2.5)
9	CH9S-8004	5	PLUG
10	CH9S-8005	1	PLUG

[A] PART OF 169-0027; 169-0028 HITCH
AR-3 POINT; 193-8198 VALVE AR

00880872
PR: t05i29k58b0410

VALVE GP-BANK 4 - 180-0494
IMPLEMENT

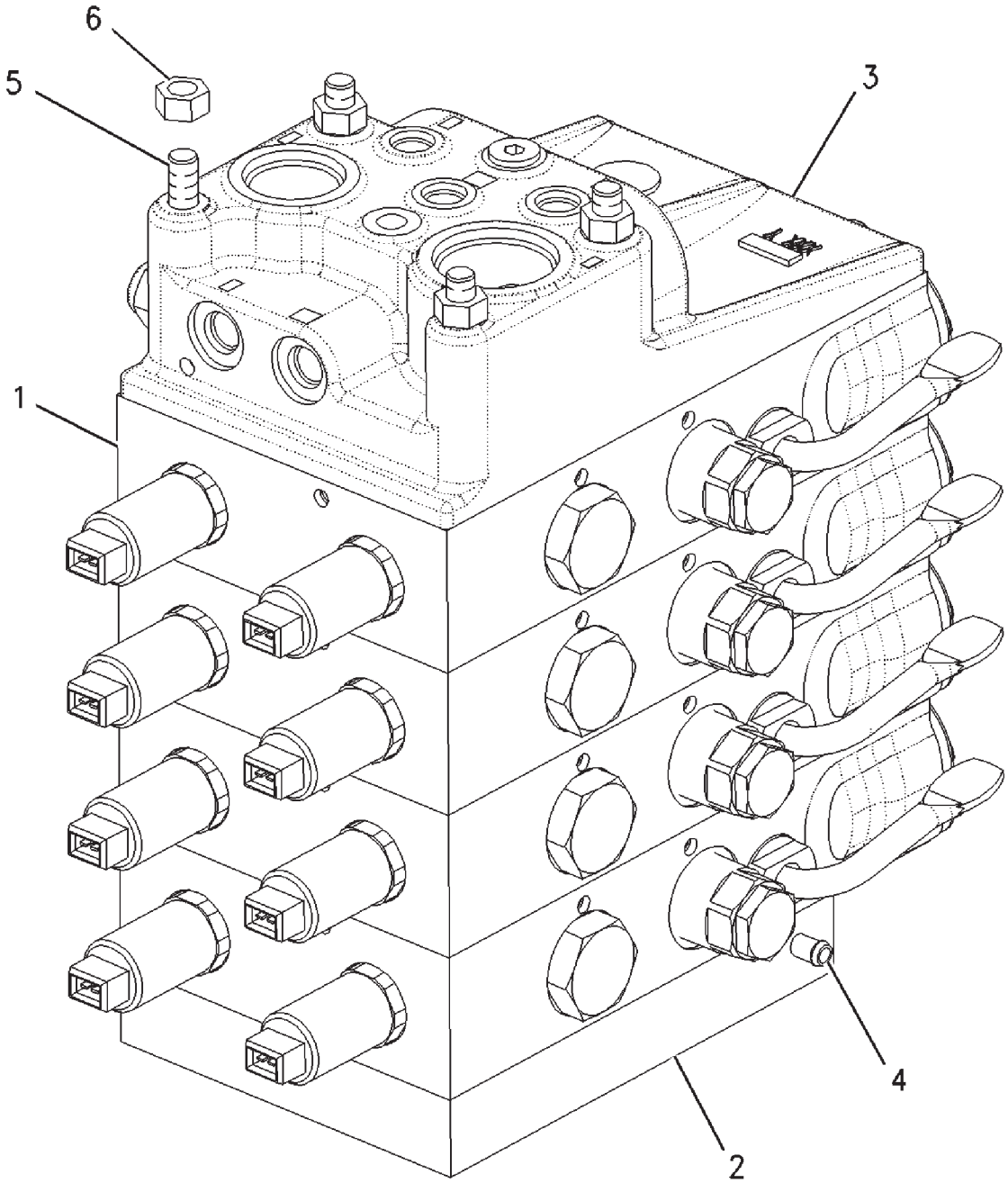

00887124

VALVE GP-BANK 4 - 180-0494
IMPLEMENT

ITEM	NUMBER	QTY	DESCRIPTION
-	180-0494	--	VALVE GP-BANK 4 [A] (NOT SERVICED)
1	162-9816	4	VALVE GP-CONTROL (IMPLEMENTS) (SEE BREAKDOWN FOR COMPONENTS)
2	187-7430	1	MOUNT
3	227-8830	1	VALVE GP-FLOW CONTROL & RELIEF (SEE BREAKDOWN FOR COMPONENTS)
4	CH188-3640	3	FITTING
5	CH209-7496	4	STUD
6	WR522218	4	NUT (M10X1.5)

[A] PART OF 180-1434 VALVE AR-BANK 4

00887124
PR: t05i29k58b0411

VALVE GP-BANK 4 - 192-4817

PRIORITY W/HITCH & W/HYD TRAILER BRAKES
EAME ONLY

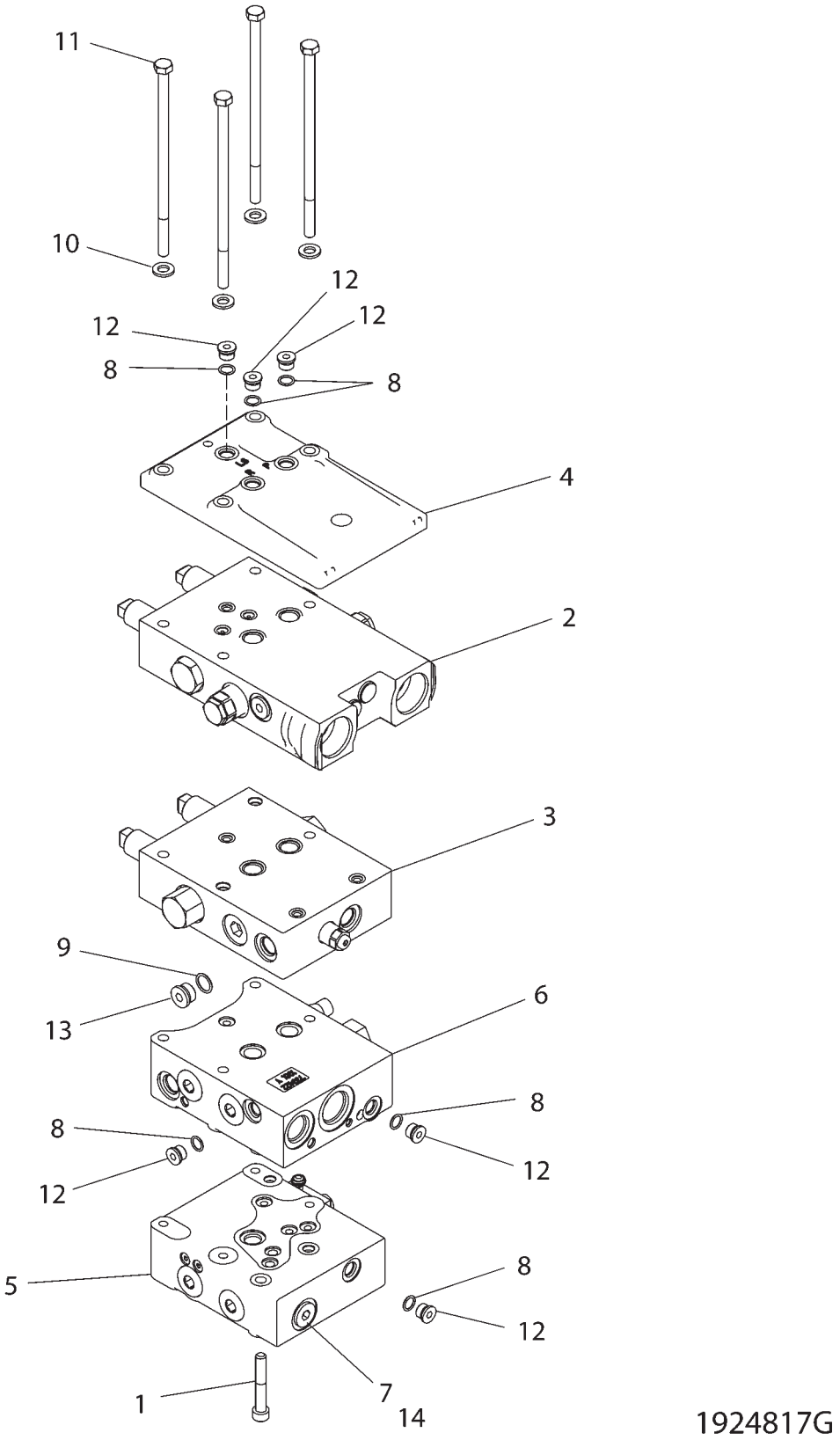

VALVE GP-BANK 4 - 192-4817

PRIORITY W/HITCH & W/HYD TRAILER BRAKES
EAME ONLY

ITEM	NUMBER	QTY	DESCRIPTION
-	192-4817	--	VALVE GP-BANK 4 [A]
1	CH8T-2392	1	BOLT-SOCKET HEAD (M10X1.5X65MM)
2	162-9817	1	VALVE GP-CONTROL (STEERABLE 3PT HITCH) (SEE BREAKDOWN FOR COMPONENTS)
3	162-9818	1	VALVE GP-CONTROL (3 POINT HITCH) (SEE BREAKDOWN FOR COMPONENTS)
4	180-0500	1	COVER-END
5	196-2318	1	VALVE GP-BRAKE CONTROL (HYD TRAILER) (SEE BREAKDOWN FOR COMPONENTS)
6	209-5021	1	VALVE GP-CONTROL (PRIORITY) (SEE BREAKDOWN FOR COMPONENTS)
7	400319X1	1	SEAL-O-RING (19.18IDX2.46DIA)
8	400318X1	6	SEAL-O-RING (11.89IDX1.98DIA)
9	CH3K-0360	1	SEAL-O-RING (16.36IDX2.21DIA)
10	400287X1	4	WASHER-HARD (11X21X2.5)
11	CH7X-0474	4	BOLT (M10X1.5X220MM)
12	CH9S-8004	6	PLUG
13	CH9S-8005	1	PLUG
14	400374X1	1	PLUG

[A] PART OF 193-8200 VALVE AR

1924817G
PR: t05i29k58b0412

VALVE GP-BANK 5 - 180-0495
IMPLEMENT

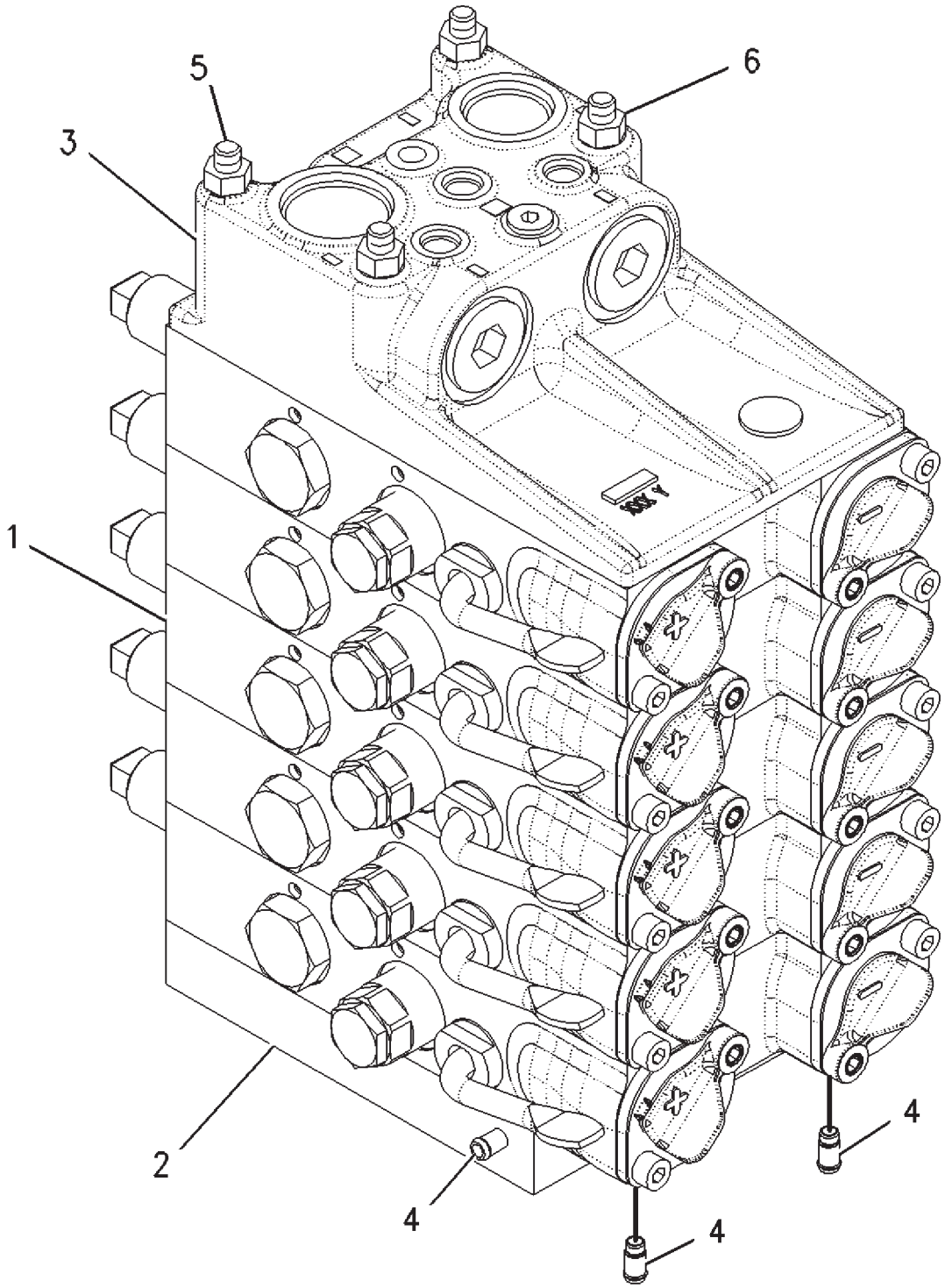

00886217

VALVE GP-BANK 5 - 180-0495
IMPLEMENT

ITEM	NUMBER	QTY	DESCRIPTION
-	180-0495	--	VALVE GP-BANK 5 [A]
1	162-9816	5	VALVE GP-CONTROL (SEE BREAKDOWN FOR COMPONENTS)
2	187-7430	1	MOUNT
3	227-8830	1	VALVE GP-FLOW CONTROL & RELIEF (SEE BREAKDOWN FOR COMPONENTS)
4	CH188-3640	3	FITTING
5	209-7497	4	STUD
6	WR522218	4	NUT (M10X1.5)

[A] PART OF 180-1438 VALVE AR-BANK 5

00886217
PR: t05i29k58b0413

VALVE GP-BANK 6 - 500752D1
5 REMOTES

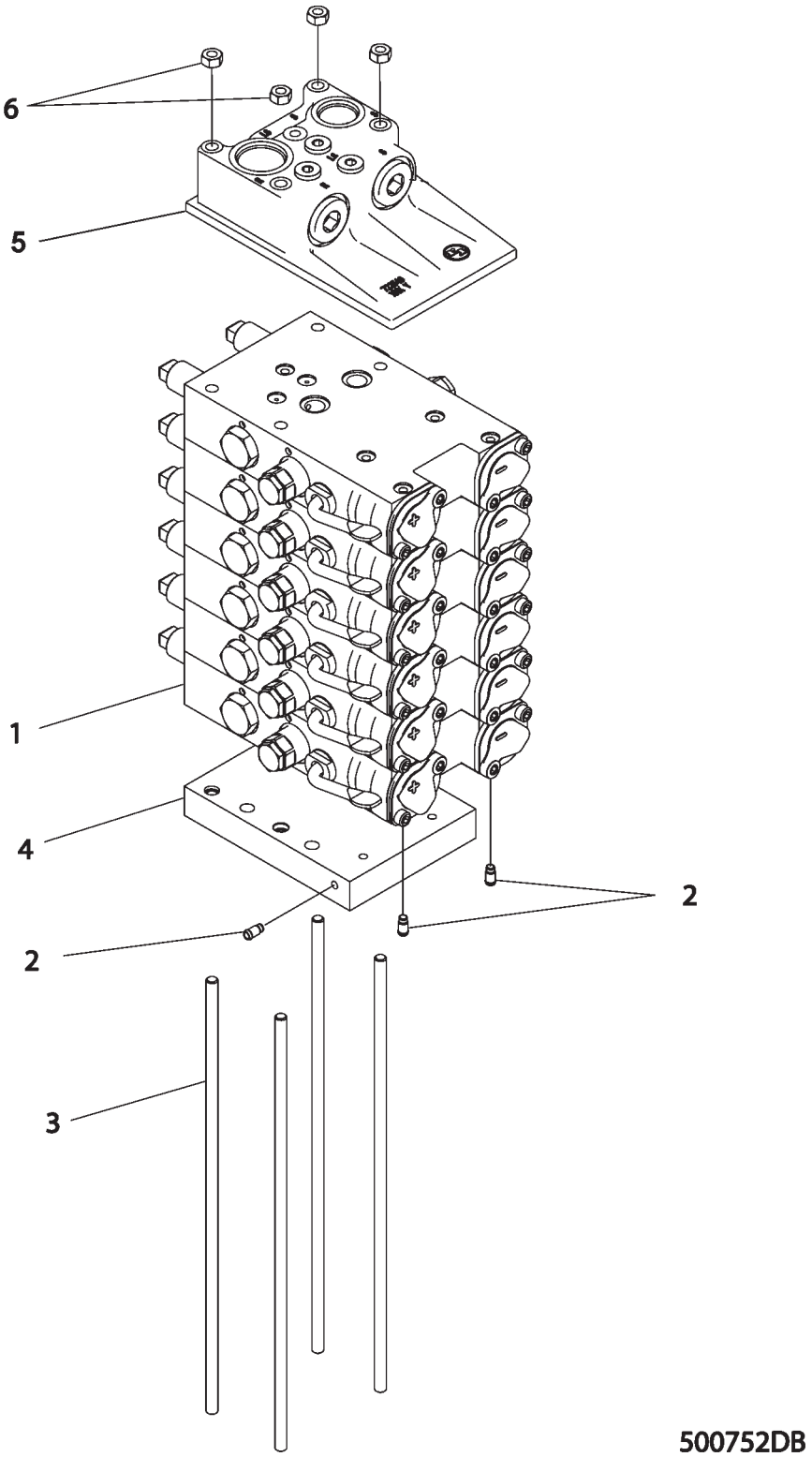

VALVE GP-BANK 6 - 500752D1
5 REMOTES

ITEM	NUMBER	QTY	DESCRIPTION
-	500752D1	--	VALVE GP-BANK 6 [A] (NOT SERVICED)
1	162-9816	6	VALVE GP-CONTROL (SEE BREAKDOWN FOR COMPONENTS)
2	CH188-3640	3	FITTING
3	CH209-7498	4	STUD
4	187-7430	1	MOUNT
5	227-8830	1	VALVE GP-FLOW CONTROL & RELIEF (SEE BREAKDOWN FOR COMPONENTS)
6	WR522218	4	NUT (M10X1.5)

[A] PART OF 500795D1 VALVE AR-IMPL

500752DB
PR: t05i29k58b0414

VALVE GP-FLOW CONTROL&RELIEF - 227-8830

IMPLEMENT

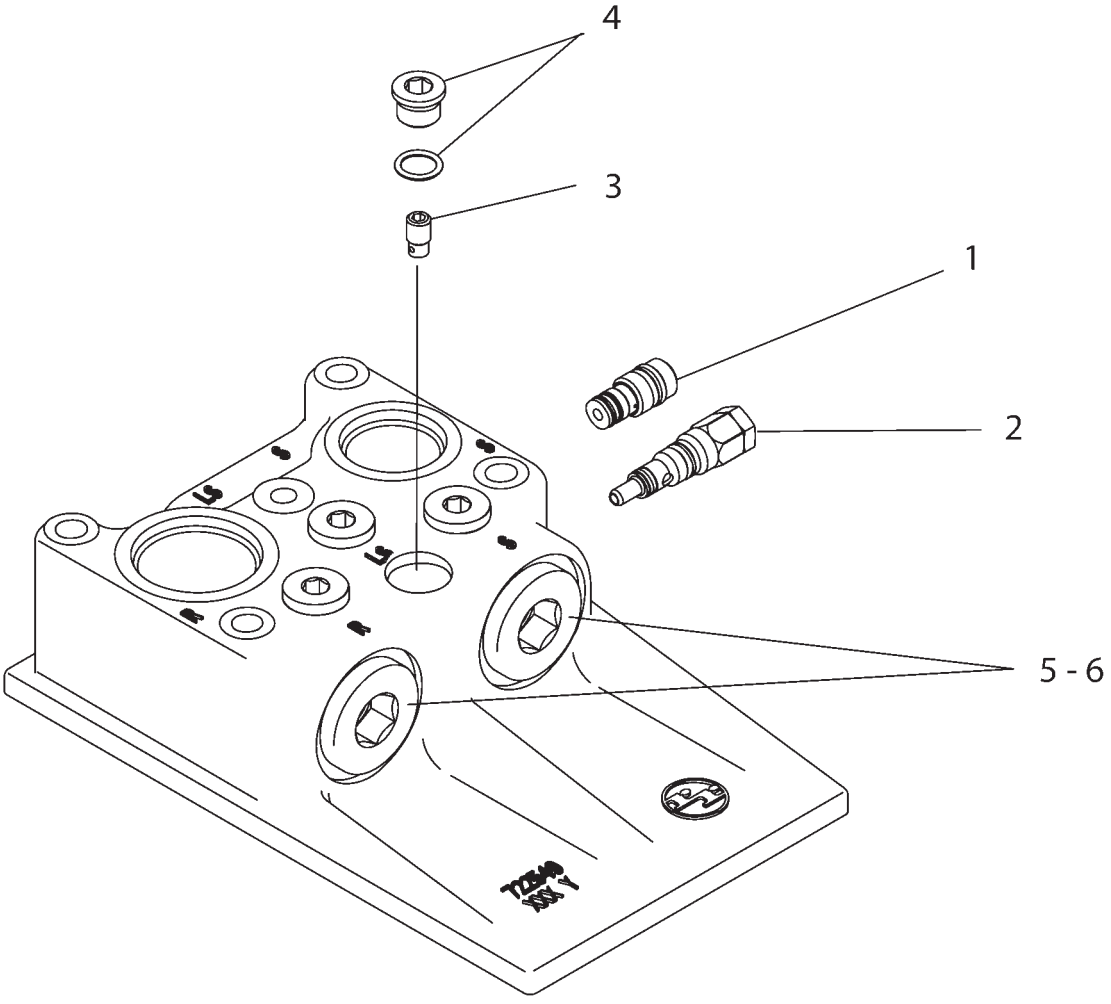

2278830B

VALVE GP-FLOW CONTROL&RELIEF - 227-8830

IMPLEMENT

ITEM	NUMBER	QTY	DESCRIPTION
-	227-8830	--	VALVE GP-INLET FLOW CONTROL & RELIEF [A]
1	227-8726	1	VALVE GP-FLOW CNTRL (INCL SEALS & RINGS)
	CH209-7451	1	RING-BACKUP
	CH209-7452	1	RING-BACKUP
	CH033-5879	1	SEAL-O-RING
	CH192-7111		SEAL-O-RING
2	227-8727	1	VALVE GP-RELIEF (INCLS SEALS & RINGS)
	CH033-5879	1	SEAL-O-RING
	CH192-7111	1	SEAL-O-RING
	CH209-7451	2	RING-BACKUP
	CH209-7452	1	RING-BACKUP
3	188-3642	1	VALVE GP-CHECK (HYD POWER BEYOND LOAD SENSOR)
4	CH162-0177	1	PLUG AS-HSHD (9/16-18)
	400318X1	1	SEAL-O-RING (11.89ID X 1.98 DIA)
5	400376X1	2	SEAL-O-RING
6	400375X1	2	PLUG

[A] PART OF: 180-0494 VALVE GP-BANK 4,
180-0495 VALVE GP-BANK 5 &
500752D1 VALVE GP-BANK 6

2278830B
PR: t05i29k58b0415

VALVE GP-CONTROL - 162-9816
IMPLEMENT

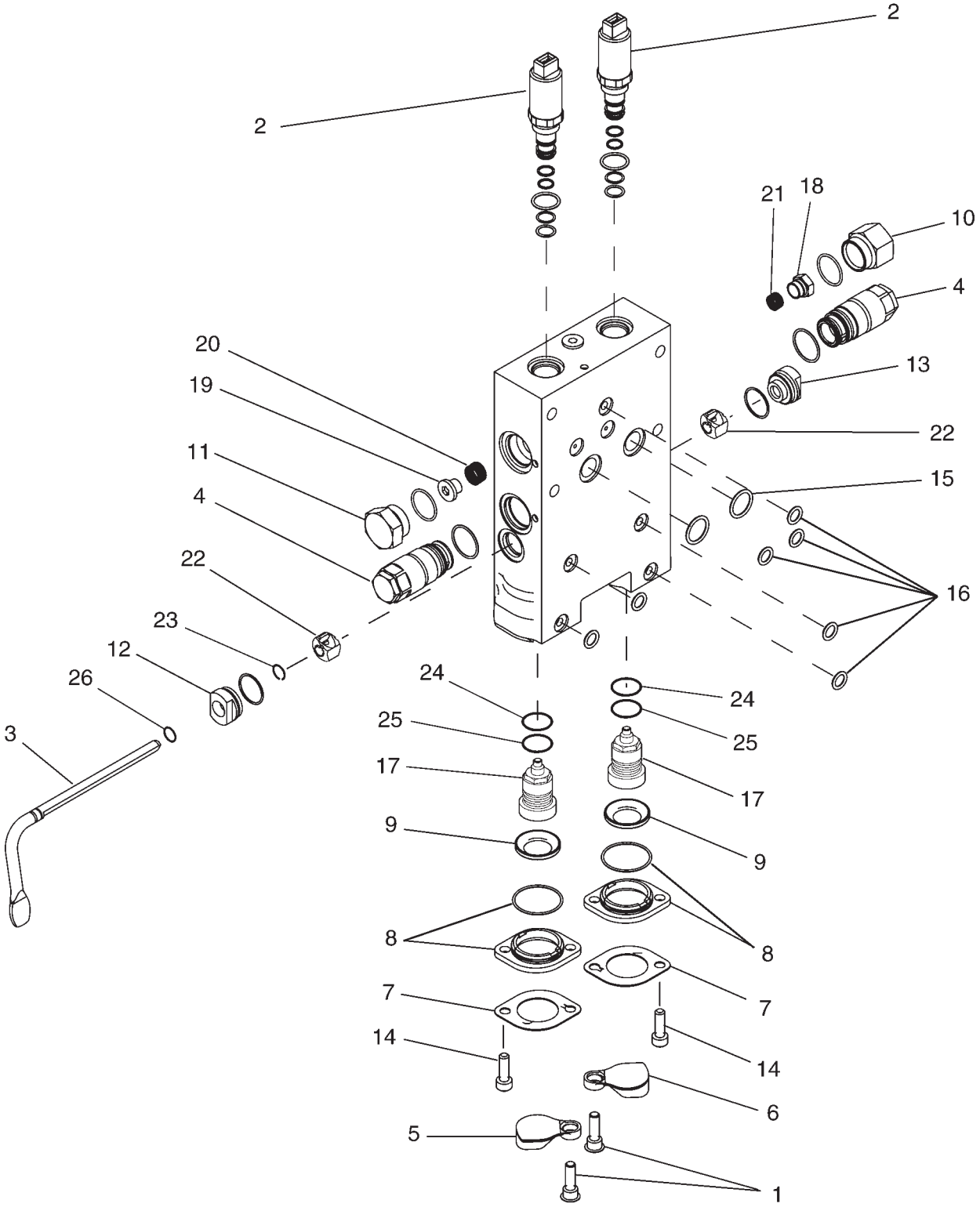

1629816D

VALVE GP-CONTROL - 162-9816
IMPLEMENT

ITEM	NUMBER	QTY	DESCRIPTION
-	162-9816	--	VALVE GP-CONTROL [A]
1	CH162-9821	2	BOLT (M8X1X25MM))
2	165-8537	2	VALVE GP-SOLENOID & PRESS REDC
	CH209-9680	1	KIT-SEAL (VALVE GP-CHECK)
3	CH186-0341	1	LEVER
4	186-0346	2	VALVE GP-CHECK (INCLUDES SEAL-O-RING)
	CH033-6032	1	SEAL-O-RING
5	CH186-0347	1	COVER-DUST
6	CH186-0348	1	COVER-DUST
7	CH186-0364	2	PLATE
8	CH186-0365	2	PLATE ASM
	CH187-9630	1	SEAL-O-RING
9	CH186-0367	2	SEAL
10	CH186-0368	1	PLUG ASM (INCLUDES SEAL-O-RING)
	CH175-3135	1	SEAL-O-RING
11	CH186-0369	1	PLUG ASM (INCLUDES SEAL-O-RING)
	CH175-3135	1	SEAL-O-RING
12	CH186-0375	1	CAP ASM (INCLUDES SEAL-O-RING)
	CH162-9799	1	SEAL-O-RING
13	CH186-0376	1	CAP ASM
	CH162-9799	1	SEAL-O-RING
14	CH209-8296	2	BOLT-SOCKET HEAD (M8X1.25X25MM)
15	CH5P-9186	2	SEAL-O-RING
16	CH8L-2777	7	SEAL-O-RING
17	186-0342	2	COUPLING GP (INCL SEAL)
	CH146-4350	1	SEAL
18	CH186-0370	1	PLUG
19	CH186-0371	1	PLUG
20	186-0372	1	SPRING
21	186-0373	1	SPRING
22	186-0377	2	CAM
23	CH096-2323	1	RING-RETAINING
24	CH146-4351	2	SEAL
25	CH5D-6539	2	SEAL-O-RING
26	CH3E-4296	1	SEAL-O-RING

[A] PART OF 180-0494;180-0495
500752D1 VALVE GP;
189-5906 KIT-HYDRAULIC

1629816D
PR: t05i29k58b0416

VALVE GP-CONTROL - 162-9817
STEERABLE HITCH

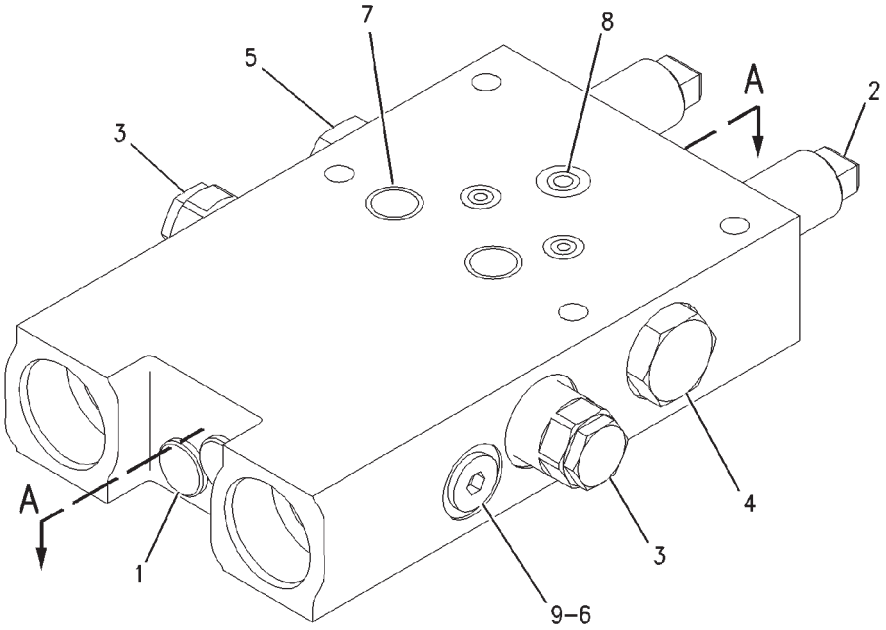

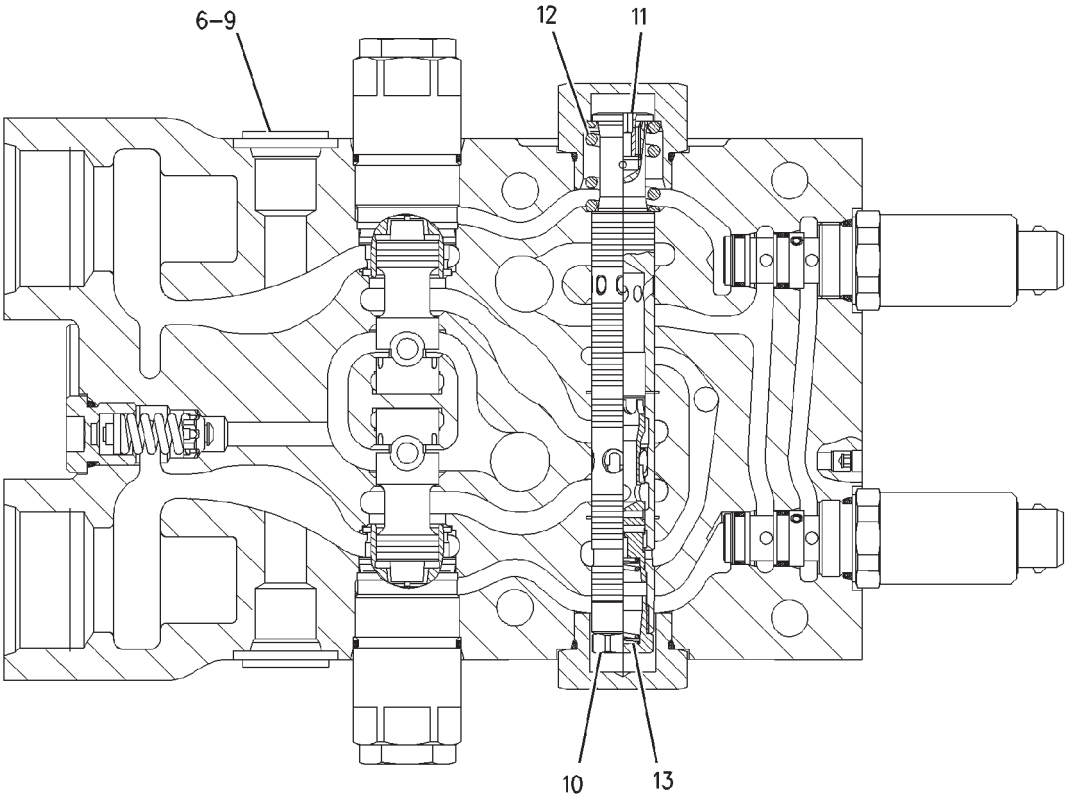

SECTION A–A

00886104

VALVE GP-CONTROL - 162-9817
STEERABLE HITCH

ITEM	NUMBER	QTY	DESCRIPTION
-	162-9817	--	VALVE GP-CONTROL [A]
1	162-9822	2	VALVE GP-RELIEF (INCLS O-RING SEAL)
	400322X1	1	SEAL-O-RING (19.28 ID X 1.78 DIA)
2	165-8537	2	VALVE GP-SOLENOID & PRESS REDC
	CH209-9680		KIT-SEAL (SOLENOID VALVE)
3	186-0346	2	VALVE GP-CHECK
	CH033-6032	1	SEAL-O-RING
4	CH186-0368	1	PLUG ASM
	CH175-3135	1	SEAL-O-RING
5	CH186-0369	1	PLUG ASM
	CH175-3135	1	SEAL-O-RING
6	CH3K-0360	2	SEAL-O-RING
7	CH5P-9186	2	SEAL-O-RING
8	CH8L-2777	3	SEAL-O-RING
9	CH9S-8005	2	PLUG
10	186-0370	1	PLUG
11	CH186-0371	1	PLUG
12	CH186-0372	1	SPRING
13	186-0373	1	SPRING

[A] PART OF:
192-4708 VALVE GP-BANK 3
192-4817 VALVE GP-BANK 4

00886104
PR: t05i29k58b0417

VALVE GP-CONTROL - 162-9818
3 POINT HITCH

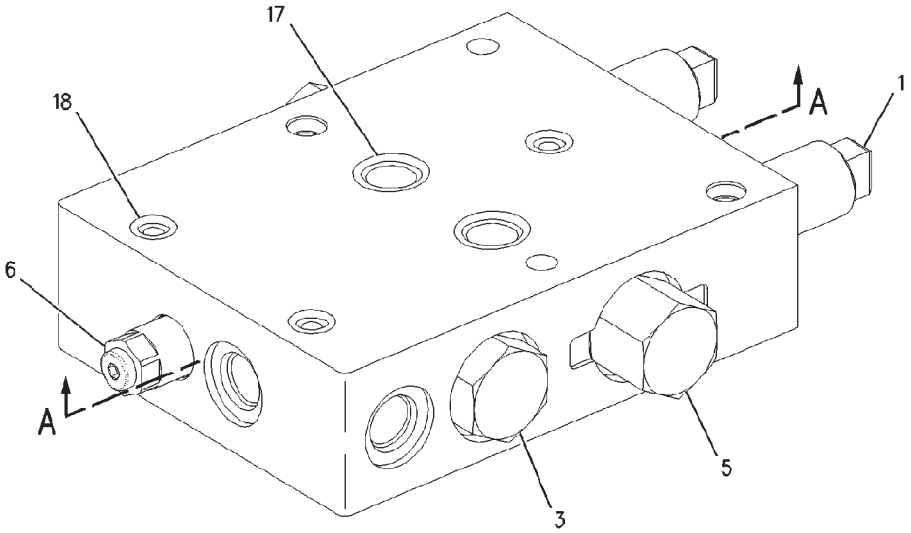

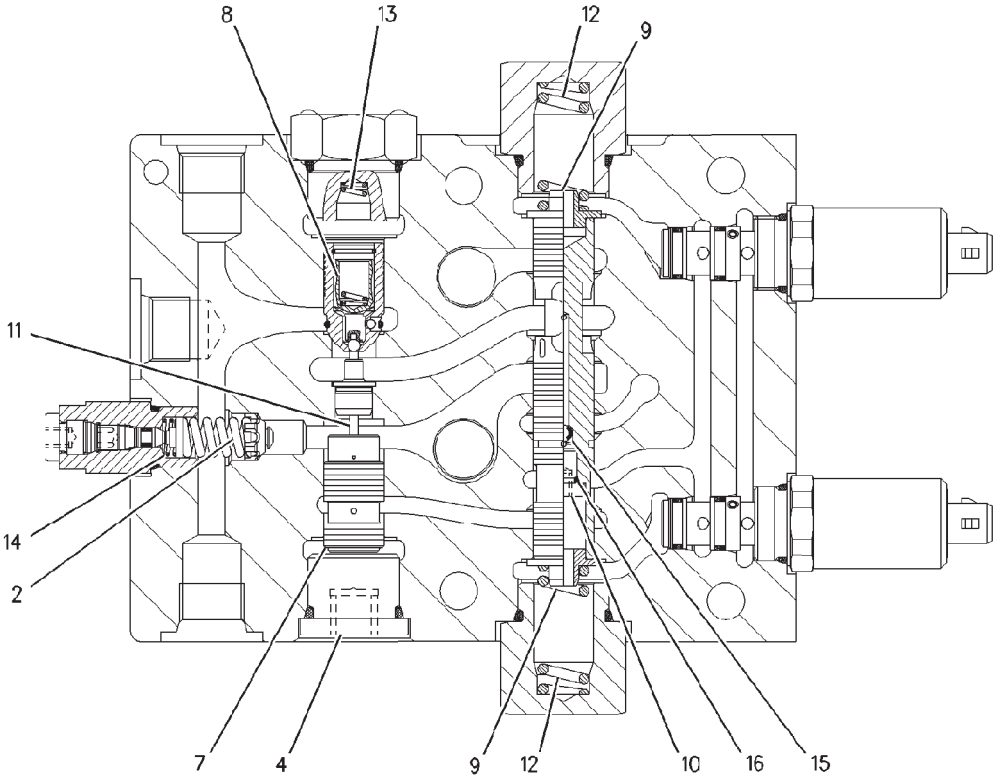

SECTION A-A

00902036

VALVE GP-CONTROL - 162-9818
3 POINT HITCH

ITEM	NUMBER	QTY	DESCRIPTION
-	162-9818	--	VALVE GP-CONTROL [A]
1	165-8537	2	VALVE GP-SOLENOID & PRESS REDC (3PT HITCH RAISE/LOWER)
	209-9680	1	SEAL-KIT
2	209-7359	1	VALVE-RELIEF (3PT HITCH CNTRL CIRCUIT)
3	216-3569	1	PLUG ASM
	CH8T-7525	1	SEAL-O-RING
4	216-3458	1	PLUG ASM
	CH8T-7525	1	SEAL-O-RING
5	216-3570	2	PLUG ASM
	CH8T-7525	1	SEAL-O-RING
6	209-7599	1	SCREW-LOWERING (3PT HITCH MANUAL LOWER)
7	216-3461	1	SPOOL-VALVE
8	216-3462	1	VALVE-CHECK (3PT HITCH POSITION HOLD)
9	216-3475	2	RETAINER
10	CH216-4098	1	PLUG
11	216-3478	1	PIN
12	216-3479	2	SPRING
13	216-3480	1	SPRING
14	216-3481	1	SPRING
15	CH3G-0785	1	BALL
16	CH109-9685	1	SEAL-O-RING (6.07IDX1.63DIA)
17	CH5P-9186	2	SEAL-O-RING (20.31IDX2.62DIA)
18	CH8L-2777	3	SEAL-O-RING (10.77IDX2.62DIA)

[A] PART OF:
192-4708 VALVE GP-BANK 3
192-4817 VALVE GP-BANK 4

00902036
PR: t05i29k58b0418

VALVE GP-CONTROL - 192-4707
PRIORITY W/HYDRAULIC TRAILER BRAKES

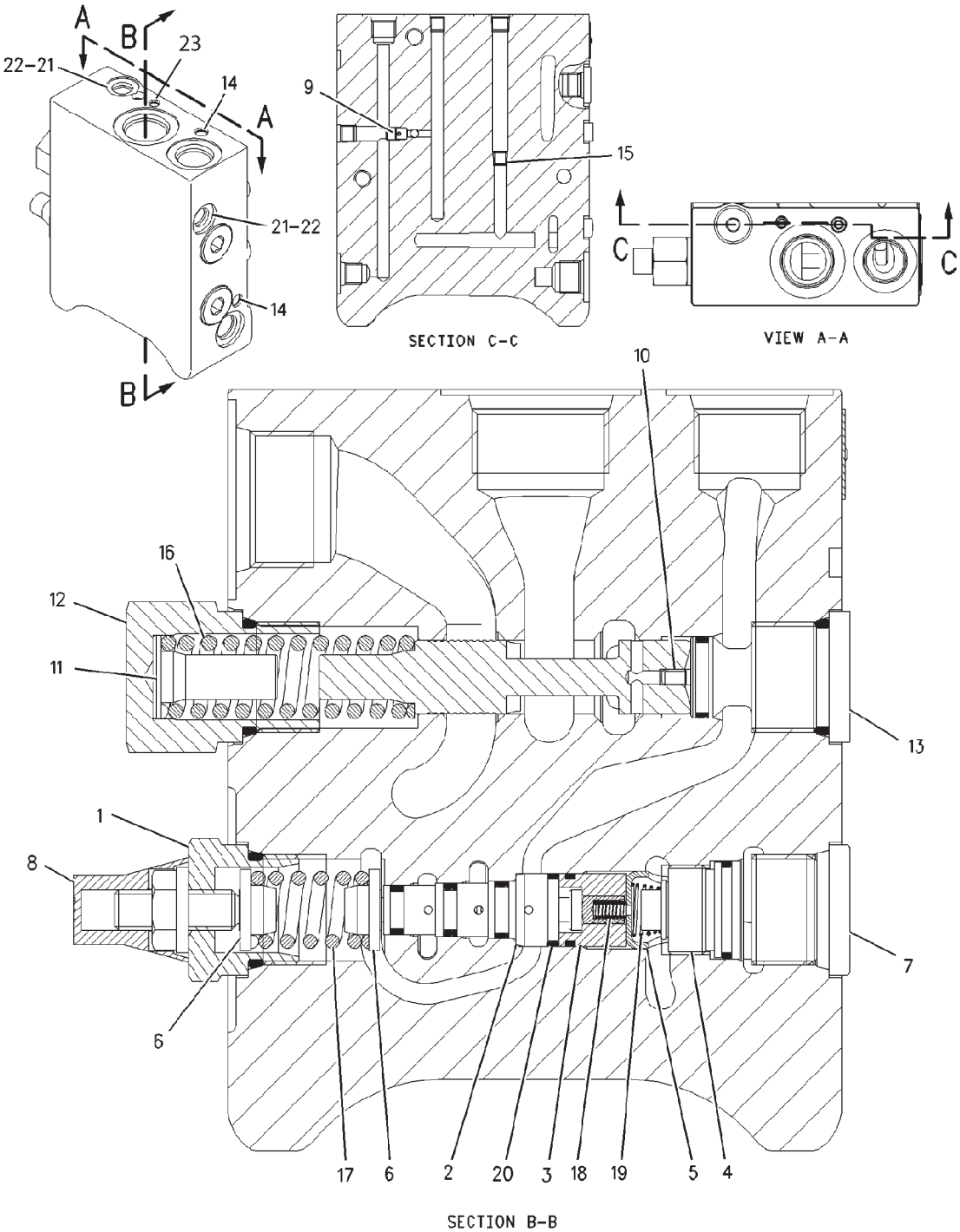

1924707A

VALVE GP-CONTROL - 192-4707
PRIORITY W/HYDRAULIC TRAILER BRAKES

ITEM	NUMBER	QTY	DESCRIPTION
-	192-4707	--	VALVE GP-CONTROL [A]
1	216-6971	1	ADJUSTER ASM
	CH8T-7525	1	SEAL-O-RING
	216-6988	1	SCREW
	216-6990	1	SEAL
2	216-6972	1	VALVE GP-ACCUMULATOR CHARGING (SEE BREAKDOWN FOR COMPONENTS)
3	216-6973	1	SLEEVE ASM
	400322X1	1	SEAL-O-RING
4	216-6974	1	VALVE ASM-CHECK
	CH6V-6580	1	SEAL-O-RING
5	216-6975	1	RETAINER-SPRING
6	216-6976	2	RETAINER-SPRING
7	216-6977	1	PLUG ASM
	CH8T-7525	1	SEAL-O-RING
8	216-6978	1	CAP
9	216-6979	1	VALVE-CHECK
10	216-6980	1	ORIFICE
11	216-6981	1	RETAINER
12	216-6983	1	PLUG ASM
	CH8T-7525	1	SEAL-O-RING
13	216-6984	1	PLUG ASM
	CH8T-7525	1	SEAL-O-RING
	CH6V-8399	1	SEAL-O-RING
	CH216-7114	1	RING-BACKUP
14	216-6986	3	PLUG-SPL
15	216-6987	1	ORIFICE
16	216-6991	1	SPRING
17	216-6992	1	SPRING
18	216-7010	1	SPRING
19	216-7035	1	SPRING
20	216-7115	1	RING-BACKUP
21	CH9S-8004	2	PLUG
22	400318X1	2	SEAL-O-RING (11.89ID X 1.98 DIA)
23	500932D1	1	PLUG-SPL

[A] PART OF 193-8197 VALVE AR

1924707A
PR: t05i29k58b0419

VALVE GP-BRAKE CONTROL - 196-2318
HYDRAULIC TRAILER BRAKES

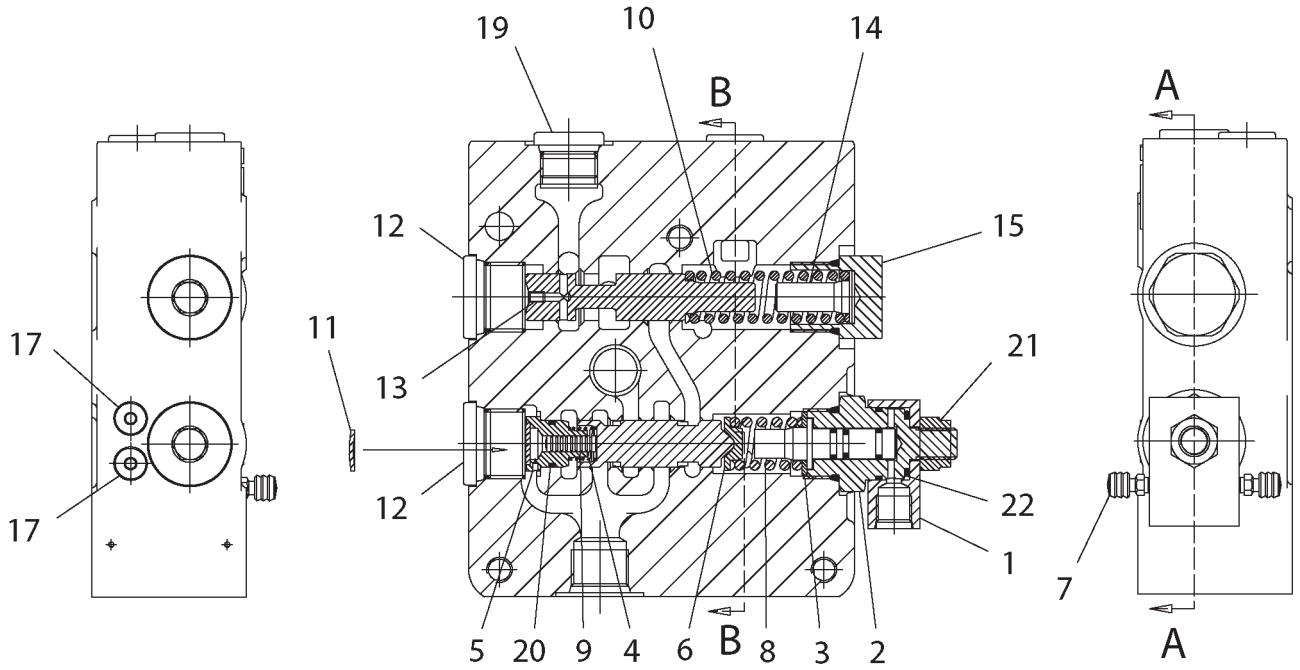

SECTION A-A

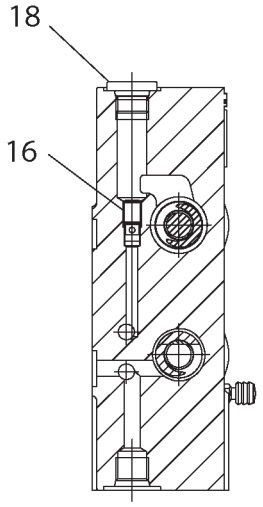

SECTION B-B

1962318C

VALVE GP-BRAKE CONTROL - 196-2318

HYDRAULIC TRAILER BRAKES

ITEM	NUMBER	QTY	DESCRIPTION
-	196-2318	--	VALVE GP-BRAKE CNTRL (COMPLETE)
1	209-9919	1	MANIFOLD
2	209-9920	1	PLUG AS
	CH8T-7525	1	SEAL-O-RING
	CH8U-7381	1	SEAL-O-RING
	CH209-9961	2	RING-GUIDE
	CH209-9962	1	RING-GUIDE
3	CH209-9921	1	WASHER
4	CH209-9927	1	SLUG
5	209-9936	1	SLEEVE
6	CH209-9947	1	SEAT-SPRING
7	209-9949	2	SCREW-PURGE
8	CH209-9955	1	SPRING
9	CH209-9957	1	SPRING
10	216-6991	1	SPRING
11	CH210-1993	1	WASHER
12	216-6977	2	PLUG AS
	CH8T-7525	1	SEAL-O-RING
13	216-6980	1	ORIFICE
14	216-6981	1	RETAINER
15	CH216-8187	1	PLUG AS
	CH8T-7525	1	SEAL-O-RING
16	216-8188	1	VALVE AS-SHUTTLE
17	CH216-8189	2	PLUG AS
	CH3E-4289	1	SEAL-O-RING
18	CH216-8190	1	PLUG AS
	CH3E-4298	1	SEAL-O-RING
19	CH216-8191	1	PLUG AS
	400319X1	1	SEAL-O-RING
20	CH095-1715	1	SEAL-O-RING
21	CH188-7789	1	NUT (M12X1.50)
22	CH6V-3922	1	SEAL-O-RING

[A] PART OF:
192-4816 VALVE GP-BANK 2
192-4817 VALVE GP-BANK 4
209-3689 KIT-HYD TRAILER BRAKE

1962318C
PR: t05i29k58b0420

VALVE GP-CONTROL - 209-5019
PRIORITY & ACCUMULATOR CHARGE

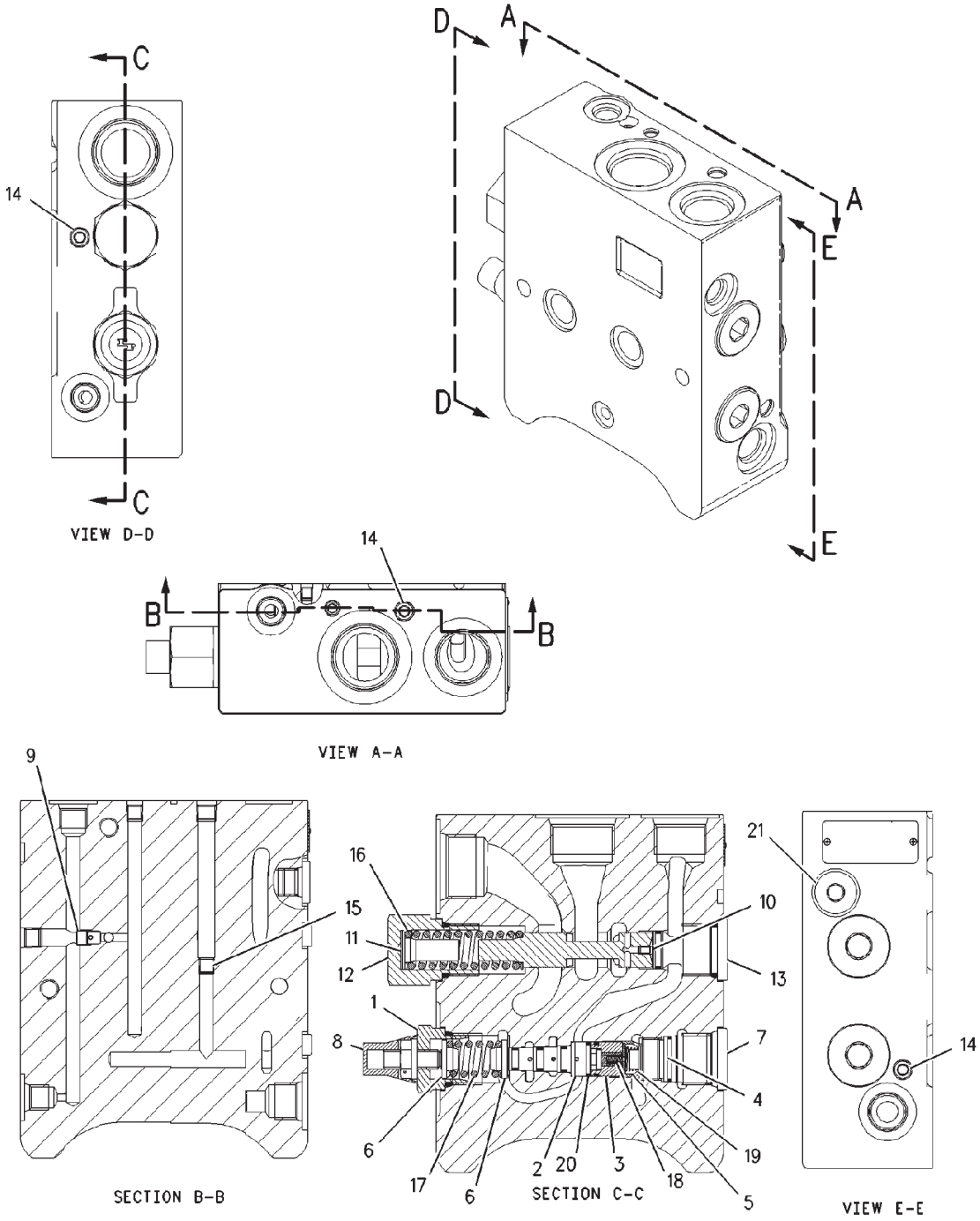

00889029

VALVE GP-CONTROL - 209-5019
PRIORITY & ACCUMULATOR CHARGE

ITEM	NUMBER	QTY	DESCRIPTION
-	209-5019	--	VALVE GP-CONTROL [A]
1	216-6971	1	ADJUSTER ASM
	CH8T-7525	1	SEAL-O-RING
	216-6988	1	SCREW
	216-6990	1	SEAL
2	216-6972	1	VALVE GP-ACCUMULATOR CHARGING (SEE BREAKDOWN FOR COMPONENTS)
3	216-6973	1	SLEEVE ASM
	400322X1	1	SEAL-O-RING
4	216-6974	1	VALVE ASM-CHECK
	CH6V-6580	1	SEAL-O-RING
5	216-6975	1	RETAINER-SPRING
6	216-6976	2	RETAINER-SPRING
7	216-6977	1	PLUG ASM
	CH8T-7525	1	SEAL-O-RING
8	216-6978	1	CAP
9	216-6979	1	VALVE-CHECK
10	216-6980	1	ORIFICE
11	216-6981	1	RETAINER
12	216-6983	1	PLUG ASM
	CH8T-7525	1	SEAL-O-RING
13	216-6984	1	PLUG ASM
	CH8T-7525	1	SEAL-O-RING
	CH6V-8399	1	SEAL-O-RING
	CH216-7114	1	RING-BACKUP
14	216-6986	3	PLUG
15	216-6987	1	ORIFICE
16	216-6991	1	SPRING
17	216-6992	1	SPRING
18	216-7010	1	SPRING
19	216-7035	1	SPRING
20	216-7115	1	RING-BACKUP
21	CH9S-8004	1	PLUG
22	500932D1	1	PLUG-SPCL (NOT SHOWN)

[A] PART OF 192-4708 VALVE GP-BANK 3

00889029
PR: t05i29k58b0421

VALVE GP-CONTROL - 209-5020
PRIORITY

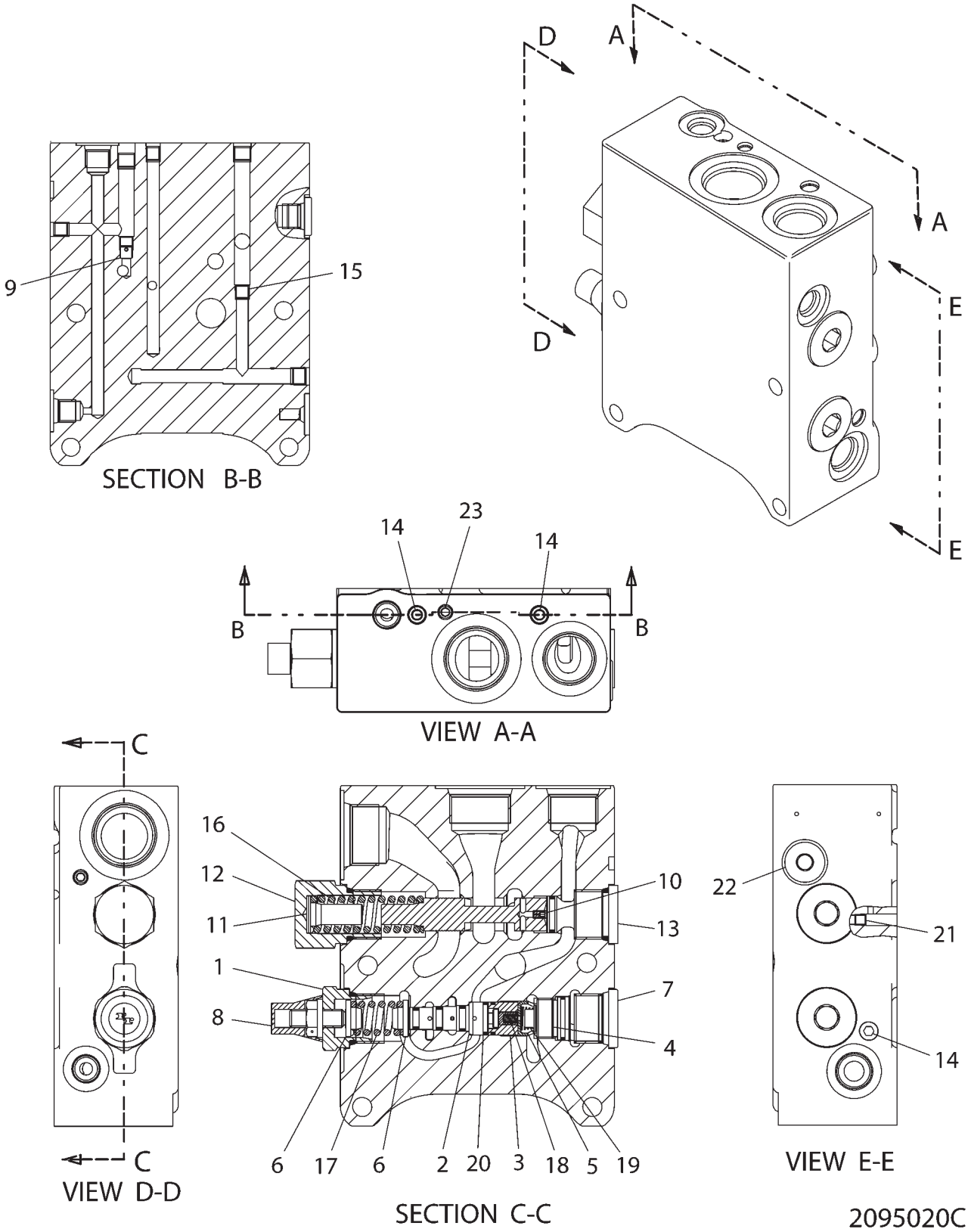

VALVE GP-CONTROL - 209-5020
PRIORITY

ITEM	NUMBER	QTY	DESCRIPTION
-	209-5020	--	VALVE GP-CONTROL [A]
1	216-6971	1	ADJUSTMENT AS
	CH8T-7525	1	SEAL-O-RING
	216-6988	1	SCREW
	216-6990	1	SEAL-LOCK NUT
2	216-6972	1	VALVE GP-ACCUMULATOR CHARGING (SEE BREAKDOWN FOR COMPONENTS)
3	216-6973	1	SLEEVE ASM
	400322X1	1	SEAL-O-RING
4	216-6974	1	VALVE ASM-CHECK
	CH6V-6580	1	SEAL-O-RING
5	216-6975	1	RETAINER-SPRING
6	216-6976	2	RETAINER-SPRING
7	216-6977	1	PLUG ASM
	CH8T-7525	1	SEAL-O-RING
8	216-6978	1	CAP
9	216-6979	1	VALVE-CHECK
10	216-6980	1	ORIFICE
11	216-6981	1	RETAINER
12	216-6983	1	PLUG ASM
	CH8T-7525	1	SEAL-O-RING
13	216-6984	1	PLUG ASM
	CH8T-7525	1	SEAL-O-RING
	CH6V-8399	1	SEAL-O-RING
	CH216-7114	1	RING-BACKUP
14	216-6986	3	PLUG
15	216-6987	1	ORIFICE
16	216-6991	1	SPRING
17	216-6992	1	SPRING
18	216-7010	1	SPRING
19	216-7035	1	SPRING
20	CH216-7115	1	RING-BACKUP
21	216-7404	1	ORIFICE-SPCL
22	CH9S-8004	1	PLUG AS
23	500932D1	1	PLUG-SPCL (NOT SHOWN)

[A] PART OF 192-4816 VALVE GP-BANK 2

2095020C
PR: t05i29k58b0422

VALVE GP-CONTROL - 209-5021
PRIORITY

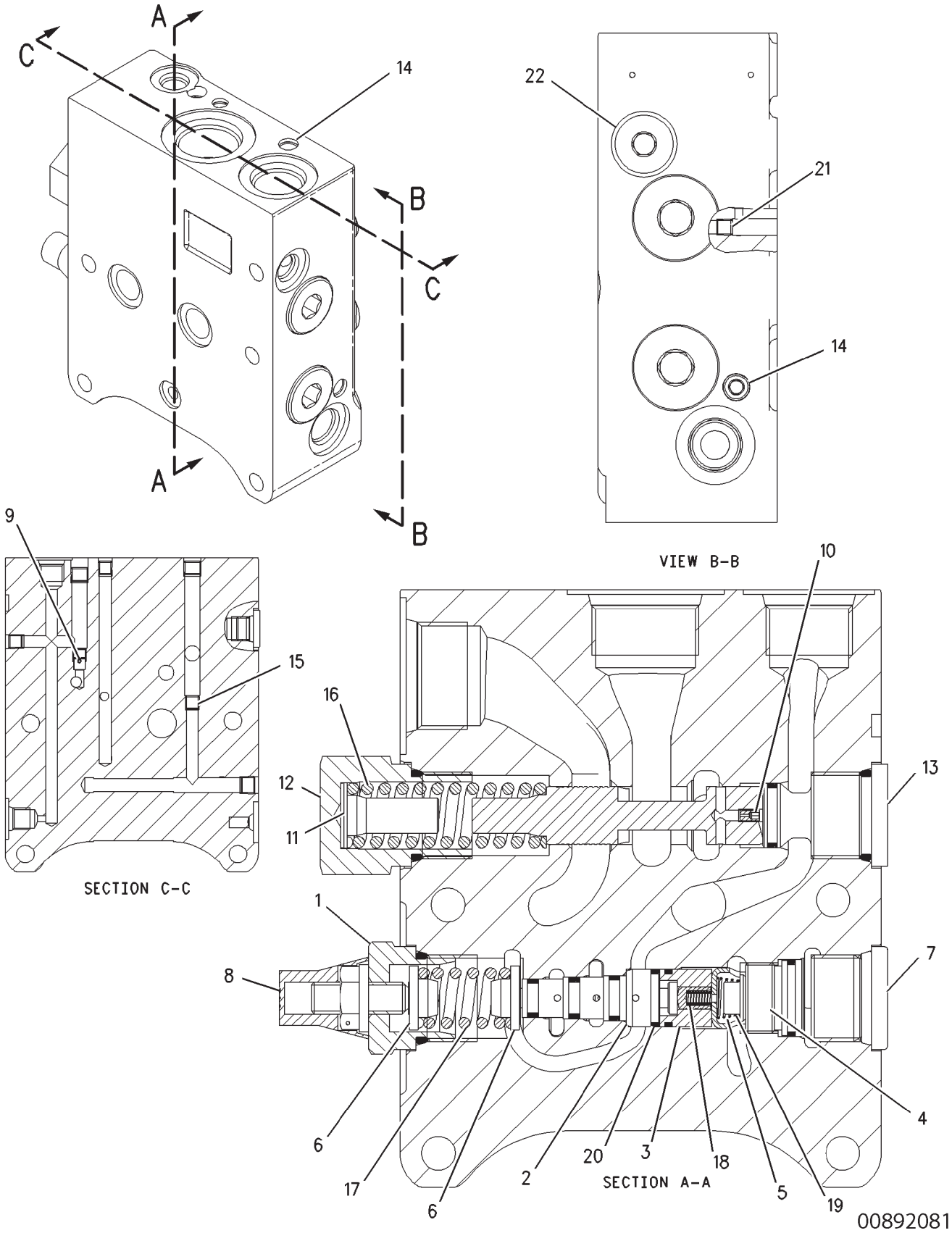

VALVE GP-CONTROL - 209-5021
PRIORITY

ITEM	NUMBER	QTY	DESCRIPTION
-	209-5021	--	VALVE GP-CONTROL [A]
1	216-6971	1	ADJUSTER AS
	CH8T-7525	1	SEAL-O-RING
	216-6988	1	SCREW
	216-6990	1	SEAL
2	216-6972	1	VALVE GP-ACCUMULATOR CHARGING (SEE BREAKDOWN FOR COMPONENTS)
3	216-6973	1	SLEEVE AS
	400322X1	1	SEAL-O-RING
4	216-6974	1	VALVE AS-CHECK
	CH6V-6580	1	SEAL-O-RING
5	216-6975	1	RETAINER-SPRING
6	216-6976	2	RETAINER-SPRING
7	216-6977	1	PLUG AS
	CH8T-7525	1	SEAL-O-RING
8	216-6978	1	CAP
9	216-6979	1	VALVE AS-CHECK
10	216-6980	1	ORIFICE
11	216-6981	1	RETAINER
12	216-6983	1	PLUG AS-SPECIAL (PRIORITY)
	CH8T-7525	1	SEAL-O-RING
13	216-6984	1	PLUG AS
	CH6V-8399	1	SEAL-O-RING
	CH8T-7525	1	SEAL-O-RING
	CH216-7114	1	RING-BACKUP
14	216-6986	3	PLUG
15	216-6987	1	ORIFICE
16	216-6991	1	SPRING
17	216-6992	1	SPRING
18	216-7010	1	SPRING
19	216-7035	1	SPRING
20	CH216-7115	1	RING-BACKUP
21	216-7404	1	ORIFICE
22	CH9S-8004	1	PLUG AS
23	500932D1	1	PLUG-SPCL (NOT SHOWN)

[A] PART OF:
209-3689 KIT-HYD TRAILER BRAKE
192-4817 VALVE GP-BANK 4

00892081
PR: t05i29k58b0423

VALVE GP-PRESS & FLOW CMPNSTR - 214-9379

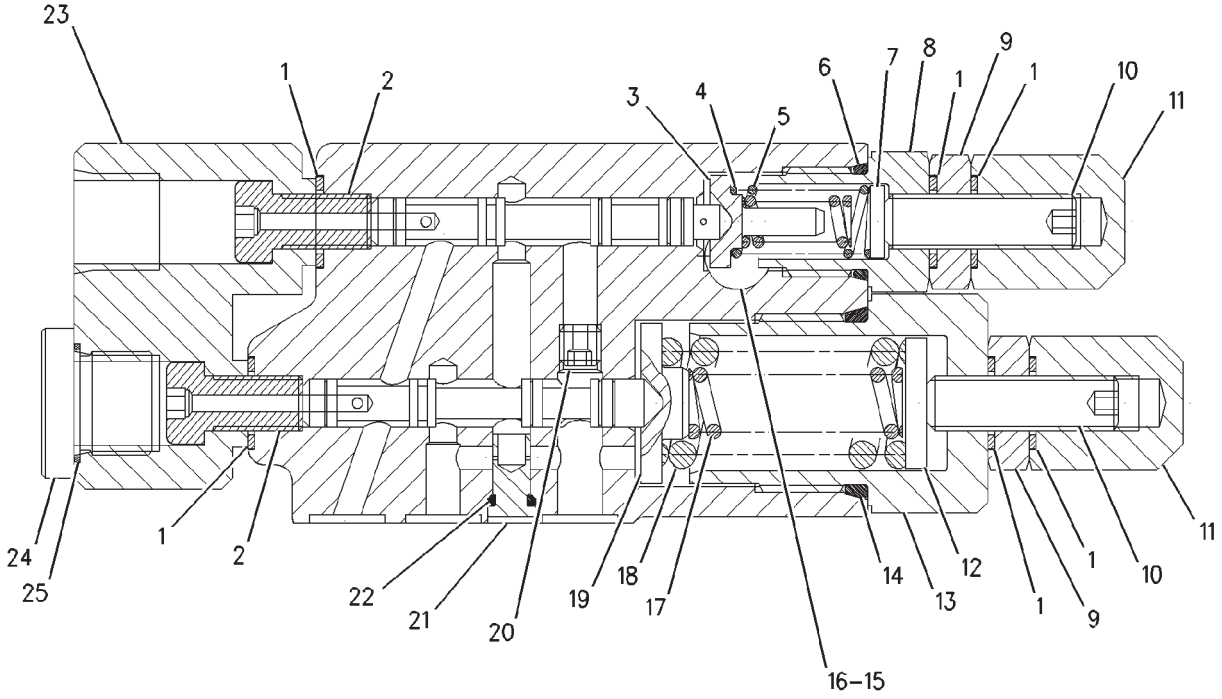

00893866

VALVE GP-PRESS & FLOW CMPNSTR - 214-9379

ITEM	NUMBER	QTY	DESCRIPTION
-	214-9379	--	VALVE GP-PRESS & FLOW CMPNSTR [A]
1	CH6E-6528	6	SEAL
2	CH194-4650	2	ADAPTER
3	CH6E-3268	1	RETAINER-SPRING
4	CH6E-3275	1	SPRING
5	CH6E-3274	1	SPRING
6	CH033-6043	1	SEAL-O-RING
7	CH6E-3272	1	SEAT
8	CH6E-6540	1	PLUG
9	CH6E-6538	2	NUT-ADJUSTMENT (M8X1)
10	CH6E-6537	2	SCREW-ADJUSTMENT (M8X1X28MM)
11	CH6E-6539	2	NUT-CAP (M8X1)
12	CH6E-3273	1	SEAT
13	CH6E-6536	1	PLUG
14	CH6V-8352	1	SEAL-O-RING
15	CH9S-8002	1	PLUG
16	400361X1	1	SEAL-O-RING (8.92ID X 1.83DIA)
17	CH193-1036	1	SPRING
18	CH6E-3276	1	SPRING
19	CH6E-3269	1	RETAINER-SPRING
20	CH201-0780	1	ORIFICE
21	CH105-2145	1	VALVE-ORIFICE
22	CH5P-9262	1	SEAL-O-RING
23	CH194-4651	1	ADAPTER (HOUSING)
24	CH9S-8004	1	PLUG
25	400318X1	1	SEAL-O-RING (11.89ID X 1.98 DIA)

[A] PART OF CH206-9017; CH206-9019
PUMP GP-PISTON

00893866
PR: t05i29k58b0424

VALVE GP-PRESSURE COMPENSATOR
CH6E-4392

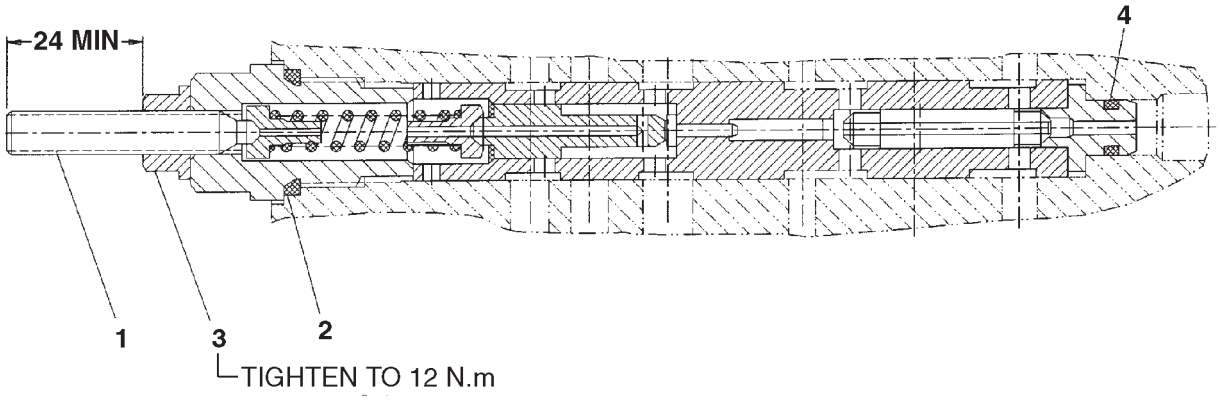

0228708A

VALVE GP-PRESSURE COMPENSATOR
CH6E-4392

ITEM	NUMBER	QTY	DESCRIPTION
-	CH6E-4392	--	VALVE GP-PRESSURE COMPENSATOR [A]
1	CH6E-4401	1	SETSCREW-ADJUSTMENT
2	CH6V-8351	1	SEAL-O-RING
3	CH6E-1607	1	LOCKNUT-SEALING
4	CH6V-5586	1	SEAL-O-RING (6.07MM ID)

[A] PART OF 205-6398 HEAD GP-PUMP

0228708A
PR: t05i29k58b0425

VALVE GP-SERVO - CH183-8417

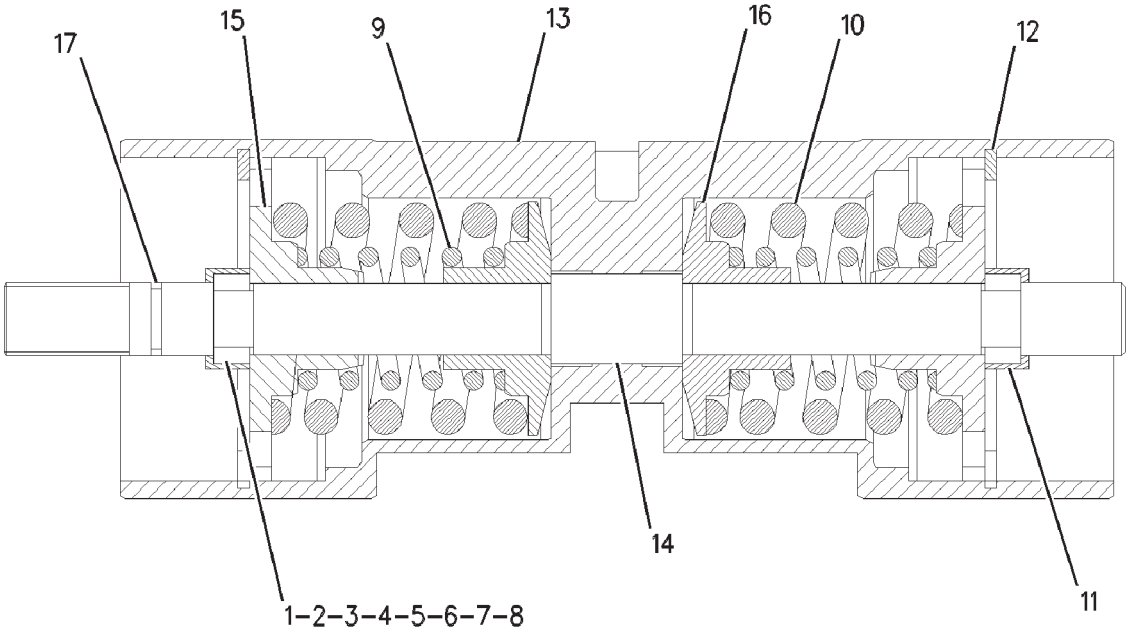

00664661

VALVE GP-SERVO - CH183-8417

ITEM	NUMBER	QTY	DESCRIPTION
-	CH183-8417	--	VALVE GP-SERVO [A]
1	CH183-8418	2	SPACER (8.00 MM)
2	CH183-8419	1	SPACER (7.85 MM)
3	CH183-8420	1	SPACER (7.90 MM)
4	CH183-8421	1	SPACER (7.95 MM)
5	CH183-8423	1	SPACER (8.05 MM)
6	CH183-8424	1	SPACER (8.10 MM)
7	CH183-8425	11	SPACER (7.75 MM)
8	CH183-8426	1	SPACER (7.80 MM)
9	CH183-8427	2	SPRING
10	CH183-8428	2	SPRING
11	CH183-8429	2	RING
12	CH095-0942	2	RING-RETAINING (63.3MM ID)
13	CH144-9093	1	PISTON-STROKING
14	CH144-9094	1	ROD
15	CH144-9097	2	RETAINER
16	CH144-9098	2	RETAINER
17	CH161-6149	1	SEAL-O-RING

[A] PART OF CH183-8430 ACTUATOR
GP-PISTON PUMP

00664661
PR: t05i29k58b0426

VALVE GP-SERVO - 205-6412

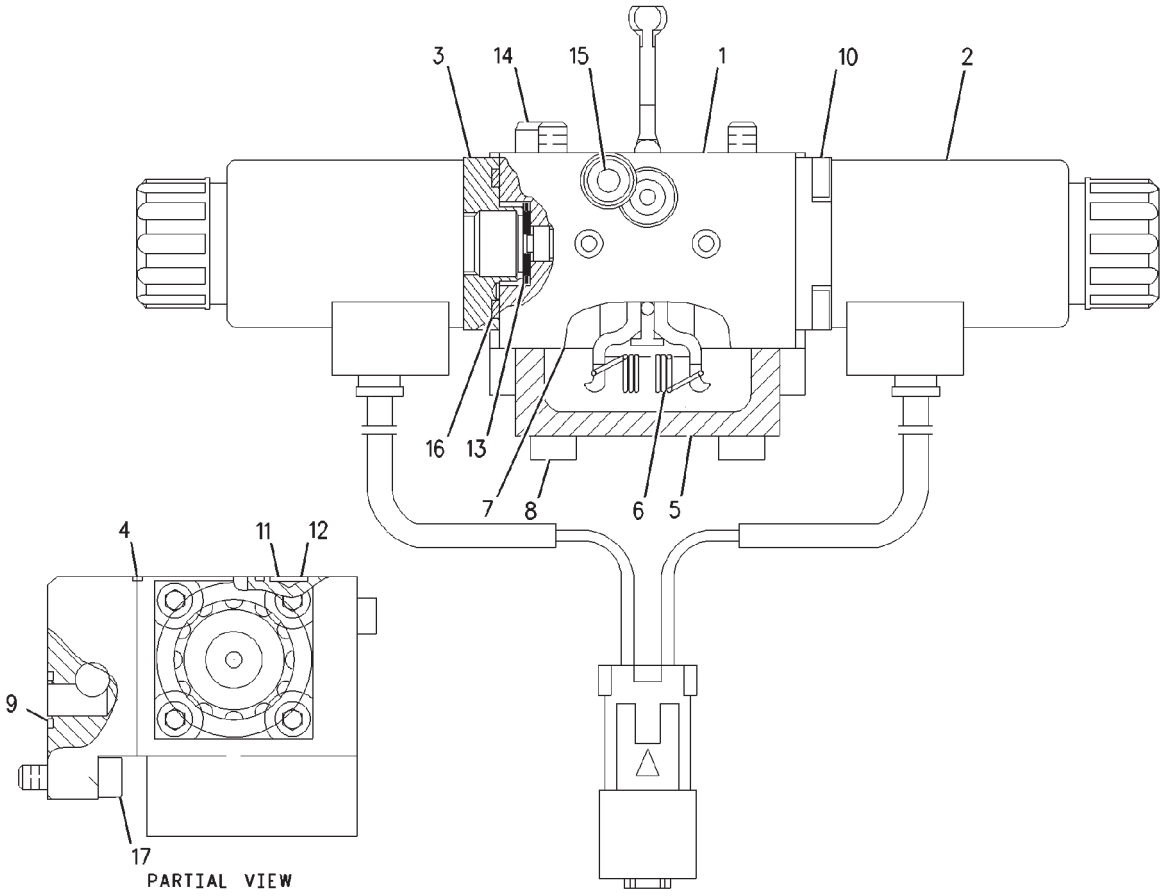

00853751

VALVE GP-SERVO - 205-6412

ITEM	NUMBER	QTY	DESCRIPTION
-	205-6412	--	VALVE GP-SERVO [A]
1	205-6464	1	HOUSING
2	196-4249	1	SOLENOID
3	CH196-4250	2	SPACER (37X37X13)
4	400365X1	1	SEAL-O-RING
5	CH111-8897	1	COVER
6	205-6411	1	SPRING
7	205-6410	1	GASKET
8	CH8T-2922	4	BOLT-SOCKET HEAD (M6X1X65MM)
9	CH6M-5062	1	SEAL-O-RING
10	CH196-9444	8	BOLT-SOCKET HEAD (M5X0.8X10MM)
11	CH6V-8398	1	SEAL-O-RING (16.03ODX1.78DIA)
12	CH112-4631	2	SEAL-O-RING
13	CH196-4254	2	SPRING
14	CH5E-7045	1	PIN-CYLINDER
15	CH096-5968	1	BOLT-SOCKET HEAD (M5X0.8X8MM)
16	CH6V-6228	2	SEAL-O-RING
17	CH8T-0269	2	BOLT-SOCKET HEAD (M6X1X20MM)

[A] PART OF CH162-9592 PUMP GP-PISTON

00853751
PR: t05i29k58b0427

ADAPTER GP-PLUG - 180-4039
ROW AND SPECIAL APPLICATIONS

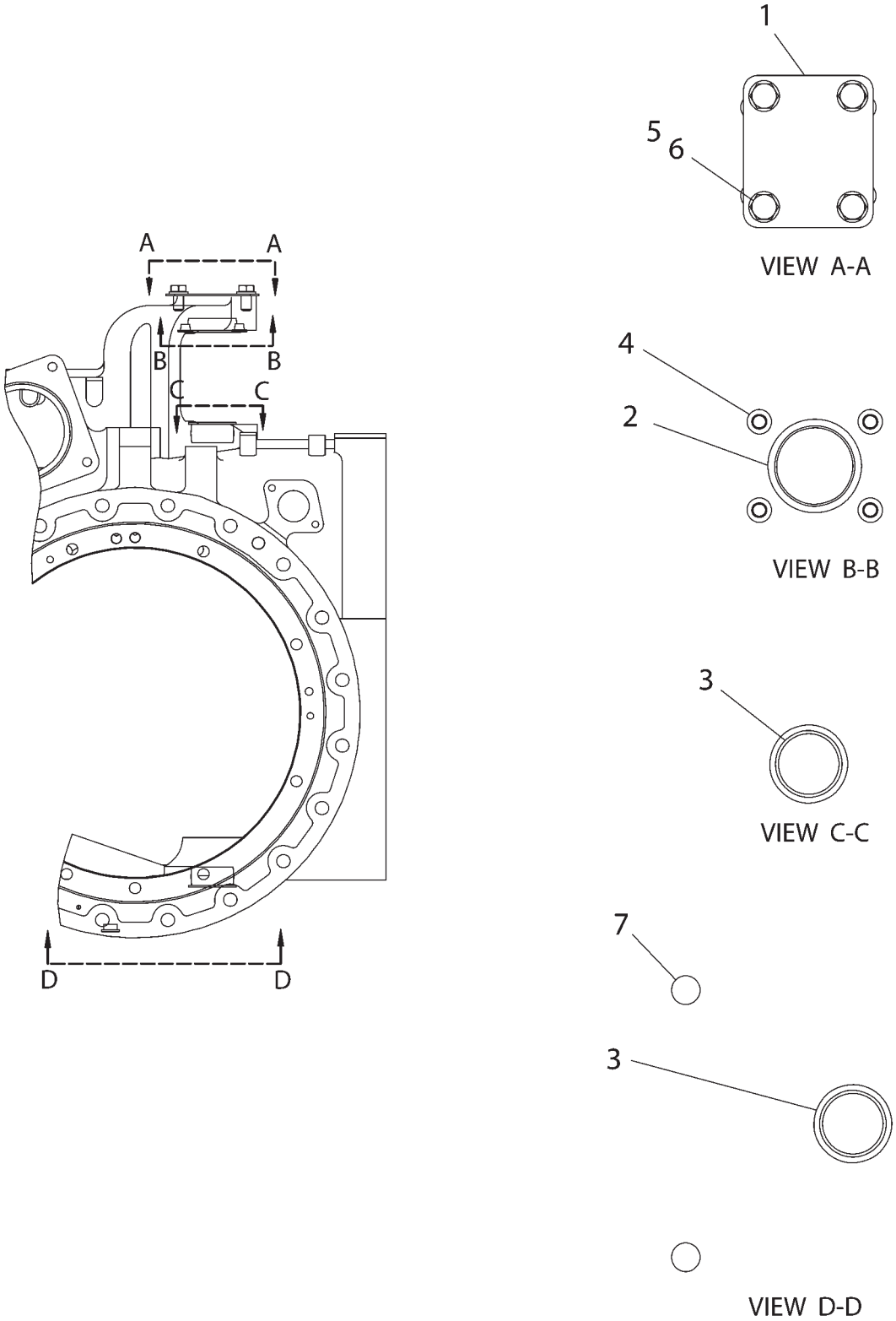

1804039F

ADAPTER GP-PLUG - 180-4039

ROW AND SPECIAL APPLICATIONS

ITEM	NUMBER	QTY	DESCRIPTION
-	180-4039	--	DRAWBAR, THREE POINT HITCH AND PTO [A]
1	CH5P-8087	2	PLUG-PROTECTIVE (M66)
2	CH198-1544	1	PLATE
3	400092X1	1	PLUG-PROTECTIVE (M80)
4	400093X1	4	PLUG-PROTECTIVE (M14)
5	400088X1	4	BOLT (M16X2X30MM)
6	400082X1	4	WASHER (17.5X30X3.5)
7	400091X1	2	PLUG-PROTECTIVE (M24)

[A] PART OF:
179-0851 HITCH AR
179-0853 HITCH AR-NON AG
184-5033 CONTROL AR-DRAWBAR

1804039F
PR: t05i29k58b0428

CONTROL AR-DRAWBAR - 184-5033
POWERED DRAWBAR

NO ILLUSTRATION

NOTIF

CONTROL AR-DRAWBAR - 184-5033
POWERED DRAWBAR

ITEM	NUMBER	QTY	DESCRIPTION
-	184-5033	--	CONTROL AR-DRAWBAR (NOT SERVICED)
	180-4039	1	ADAPTER GP-PLUG (SEE BREAKDOWN FOR COMPONENTS)
	CH184-5034	2	CYLINDER GP (SEE BREAKDOWN FOR COMPONENTS)
	180-4036	1	DRAWBAR GP-SWINGING (WIDE) (NOT SERVICED) (SEE BREAKDOWN FOR COMPONENTS)
	200-8772	1	GUARD GP-CYLINDER (NOT SERVICED) (SEE BREAKDOWN FOR COMPONENTS)
	180-0503	1	LINES GP-CYLINDER (POWERED DRAWBAR) (NOT SERVICED) (SEE BREAKDOWN FOR COMPONENTS)
	184-5035	1	MOUNTING GP-CYLINDER(CONTROLLED DRAWBAR) (NOT SERVICED) (SEE BREAKDOWN FOR COMPONENTS)
	224-9662	1	PLUG GP-3 PT HITCH (SEE BREAKDOWN FOR COMPONENTS)
	210-7509	1	SUPPORT GP-DRAWBAR (NOT SERVICED) (SEE BREAKDOWN FOR COMPONENTS)
	502498D1	1	FILLER GP-PT OIL-DRAWBAR (NOT SERVICED) (SEE BREAKDOWN FOR COMPONENTS)

NOTIF
PR: t05i29k58b0429

CONTROL AR-DRAWBAR - 210-7489
WIDE SWING

NO ILLUSTRATION

NOTIF

CONTROL AR-DRAWBAR - 210-7489

WIDE SWING

ITEM	NUMBER	QTY	DESCRIPTION
-	210-7489	--	CONTROL AR-DRAWBAR
1	CH184-5034	2	CYLINDER GP (SEE BREAKDOWN FOR COMPONENTS)
2	180-0503	1	LINES GP-CONTROL (NOT SERVICED) (SEE BREAKDOWN FOR COMPONENTS)
3	184-5035	1	MOUNTING GP-CYLINDER (NOT SERVICED) (SEE BREAKDOWN FOR COMPONENTS)
4	200-8772	1	GUARD GP-CYLINDER (NOT SERVICED) (SEE BREAKDOWN FOR COMPONENTS)
5	210-7509	1	SUPPORT GP-FRAME (NOT SERVICED) (SEE BREAKDOWN FOR COMPONENTS)

NOTIF
PR: t05i29k58b0430

HITCH AR - 179-0851
WIDE SWINGING DRAWBAR

NO ILLUSTRATION

NOTIF

HITCH AR - 179-0851
WIDE SWINGING DRAWBAR

ITEM	NUMBER	QTY	DESCRIPTION
-	179-0851	--	HITCH AR (NOT SERVICED)
	180-4039	1	ADAPTER GP-PLUG (SEE BREAKDOWN FOR COMPONENTS)
	180-4036	1	DRAWBAR GP-SWINGING (NOT SERVICED) (SEE BREAKDOWN FOR COMPONENTS)
	224-9662	1	PLUG GP-3 PT HITCH (SEE BREAKDOWN FOR COMPONENTS)
	210-7508	1	SUPPORT GP-DRAWBAR (DRAWBAR) (SEE BREAKDOWN FOR COMPONENTS)
	502498D1	1	FILLER GP-PT OIL-DRAWBAR (NOT SERVICED) (SEE BREAKDOWN FOR COMPONENTS)

NOTIF
PR: t05i29k58b0431

HITCH AR-NON AG - 179-0853

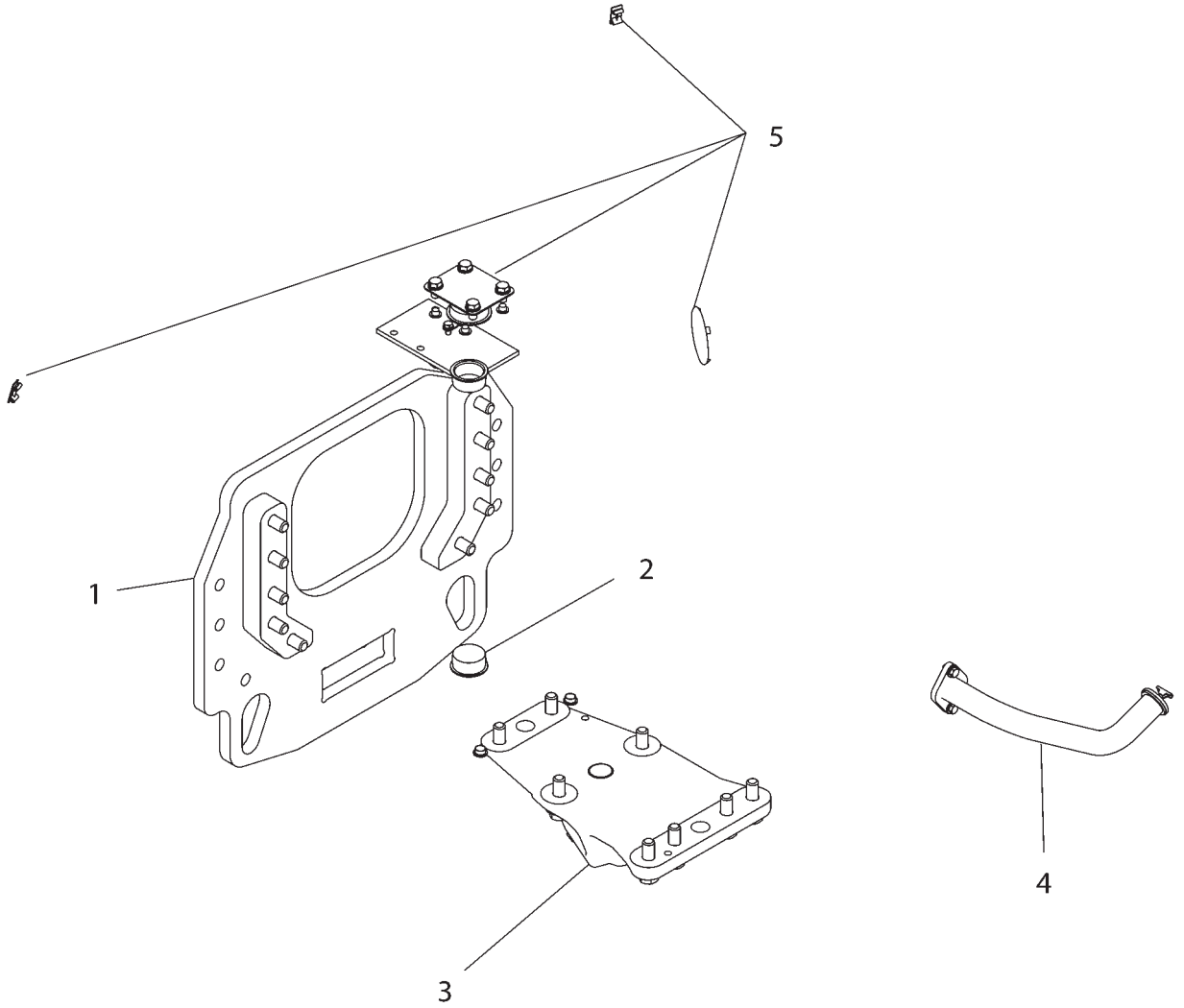

1790853F

HITCH AR-NON AG - 179-0853

ITEM	NUMBER	QTY	DESCRIPTION
-	502918D1	--	HITCH AR-NON AG (FIELD INSTALLED)
-	179-0853	--	HITCH AR-NON AG [A] (NOT SERVICED, ORDER FIELD INSTALLED)
1	180-4038	1	SUPPORT GP-DRAWBAR (REAR TIE DOWN) (SEE BREAKDOWN FOR COMPONENTS)
2	180-4039	1	ADAPTER GP-PLUG (SEE BREAKDOWN FOR COMPONENTS)
3	210-7508	1	SUPPORT GP-DRAWBAR (SEE BREAKDOWN FOR COMPONENTS)
4	502498D1	1	FILLER GP-PT OIL-DRAWBAR (NOT SERVICED) (SEE BREAKDOWN FOR COMPONENTS)
5	224-9662	1	PLUG GP-3 PT HITCH (SEE BREAKDOWN FOR COMPONENTS)

[A] PART OF 502918D1 HITCH AR-NON AG

1790853F
PR: t05i29k58b0432

COUPLER GP-QUICK - 179-3318
CATEGORY 3 & 4 NARROW

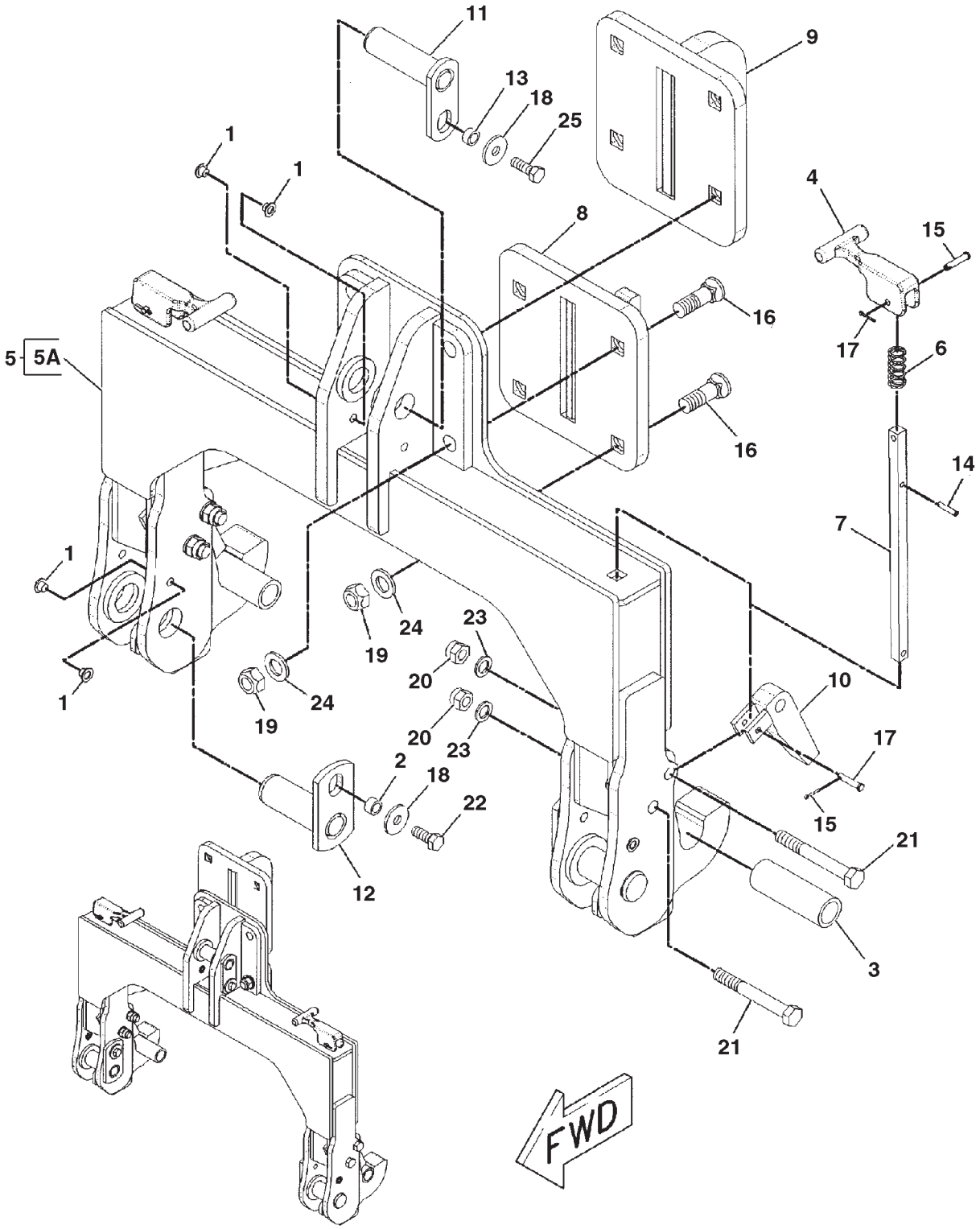

0889557A

COUPLER GP-QUICK - 179-3318

CATEGORY 3 & 4 NARROW

ITEM	NUMBER	QTY	DESCRIPTION
-	179-3318	--	COUPLER GP-QUICK [A]
1	400093X1	6	PLUG-SEALING
2	CH6Y-8112	2	SPACER (17X25X14)
3	CH104-3466	2	BUSHING
4	177-0661	2	HANDLE
5	189-3310	1	FRAME ASM
5A	189-3313	2	ARM ASM (COMPLETE ASM ONLY)
6	CH190-2584	2	SPRING
7	190-2601	2	ROD (LIFT)
8	196-2993	1	HOOK ASM (CAT 3)
9	196-2994	1	HOOK ASM (CAT 4)
10	196-2997	2	PLATE ASM
11	CH196-3017	1	PIN ASM
12	CH196-3022	2	PIN ASM
13	CH200-0010	1	SPACER (17.5X25.4X12.5)
14	CH183-5008	2	PIN-SPRING
15	CH1A-8827	4	PIN
16	400270X1	4	BOLT-PLOW (1-8)
17	CH3B-4617	4	PIN-COTTER
18	400078X1	3	WASHER (16.5X50X5)
19	CH6K-3632	4	LOCKNUT (1-8)
20	CH6V-7688	4	LOCKNUT (M20X2.5)
21	400026X1	4	BOLT (M20X2.5X160MM)
22	400191X1	2	BOLT (M16X2X40MM)
23	400080X1	4	WASHER-PLATED (22X35X3.5)
24	CH8T-5361	4	WASHER-HARD (28X49X5)
25	400244X1	1	BOLT (M16X2.0X45MM)

[A] PART OF:
169-0027; 179-0852; 186-0979
HITCH AR-3 POINT

0889557A
PR: t05i29k58b0433

COUPLER GP-QUICK - 180-6640
CATEGORY 4

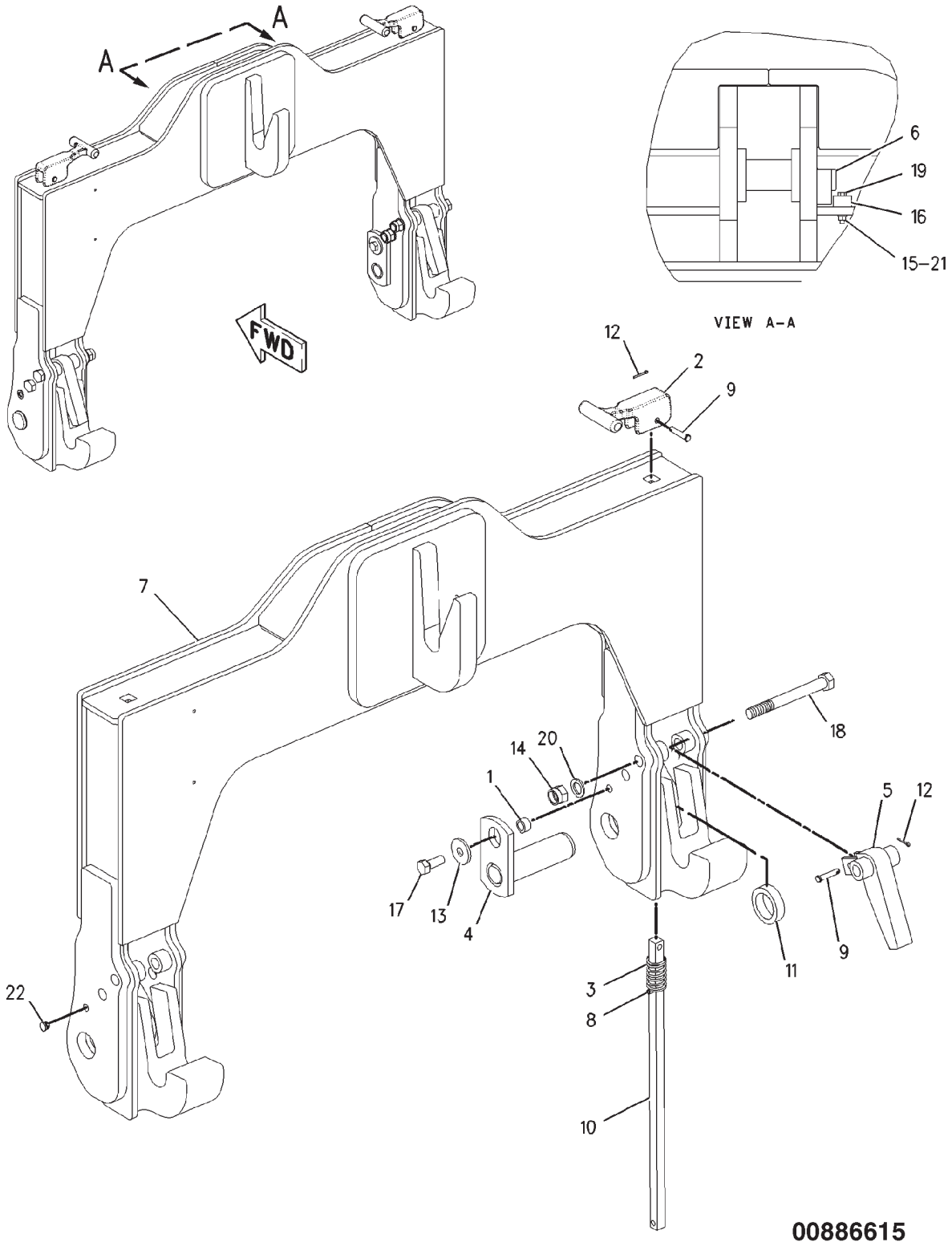

COUPLER GP-QUICK - 180-6640

CATEGORY 4

ITEM	NUMBER	QTY	DESCRIPTION
-	180-6640	--	COUPLER GP-QUICK [A] (NOT SERVICED)
1	CH6Y-8112	2	SPACER (17X25X14)
2	177-0661	2	HANDLE
3	CH190-2584	2	SPRING
4	CH190-2615	2	PIN ASM
5	196-2997	2	PLATE ASM
6	CH196-3019	1	PIN ASM
7	206-4613	1	FRAME ASM
8	CH183-5008	2	PIN-SPRING
9	CH1A-8827	4	PIN
10	206-4633	2	ROD (LIFT)
11	CH206-4636	2	SPACER (51.3X63.5X25)
12	CH3B-4617	4	PIN-COTTER
13	400078X1	2	WASHER (16.5X50X5)
14	CH6V-7688	4	LOCKNUT (M20X2.5)
15	CH6V-8225	1	NUT (M6X1)
16	500754D1	1	SPACER (.31X1.0X.62IN THK)
17	400191X1	2	BOLT (M16X2X40MM)
18	400194X1	4	BOLT (M20X2.5X180MM)
19	400205X1	1	BOLT (M6X1X40MM)
20	400080X1	4	WASHER-PLATED (22X35X3.5)
21	400310X1	1	WASHER (6.6X12X2)
22	400093X1	4	PLUG-SEAL

[A] PART OF 169-0028;180-6639;189-3300
HITCH AR-3 POINT

00886615
PR: t05i29k58b0434

CYLINDER GP - CH184-5034

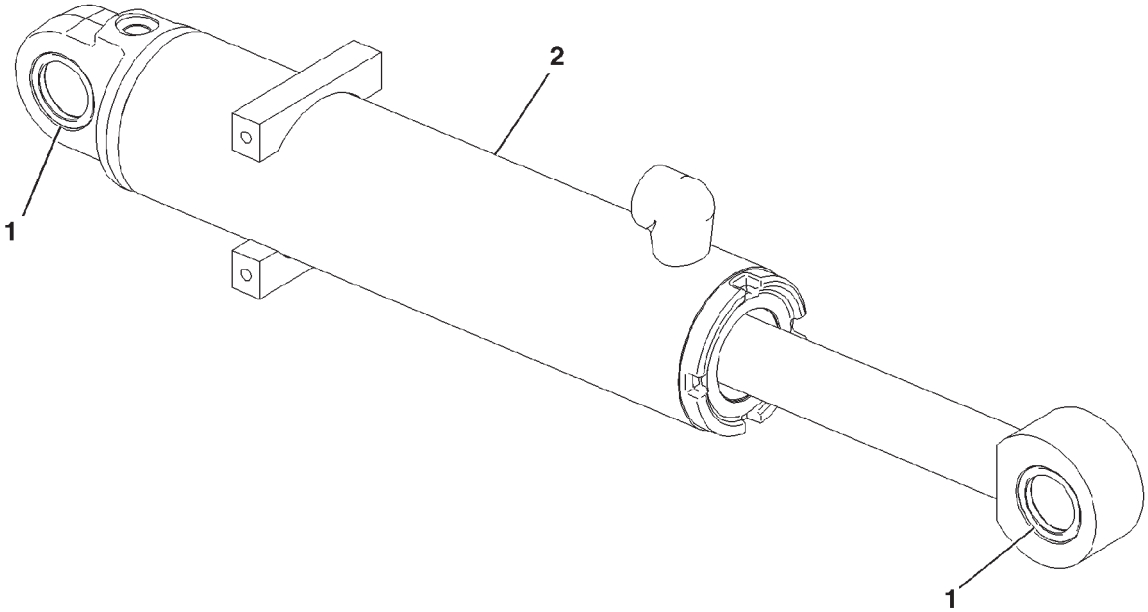

0836754A

CYLINDER GP - CH184-5034

ITEM	NUMBER	QTY	DESCRIPTION
-	CH184-5034	--	CYLINDER GP (W/BRG) [A]
1	CH189-4911	1	CYLINDER AS-STRG (NOT SERVICED, ORDER CYL GROUP W/BRG, OR COMPONENTS) (SEE BREAKDOWN FOR COMPONENTS)
2	186-1000	2	BEARING

[A] PART OF: 184-5033 & 214-7489
CONTROL AR-DRAWBAR

0836754A
PR: t05i29k58b0435

CYLINDER GP-STEERING - 183-4396

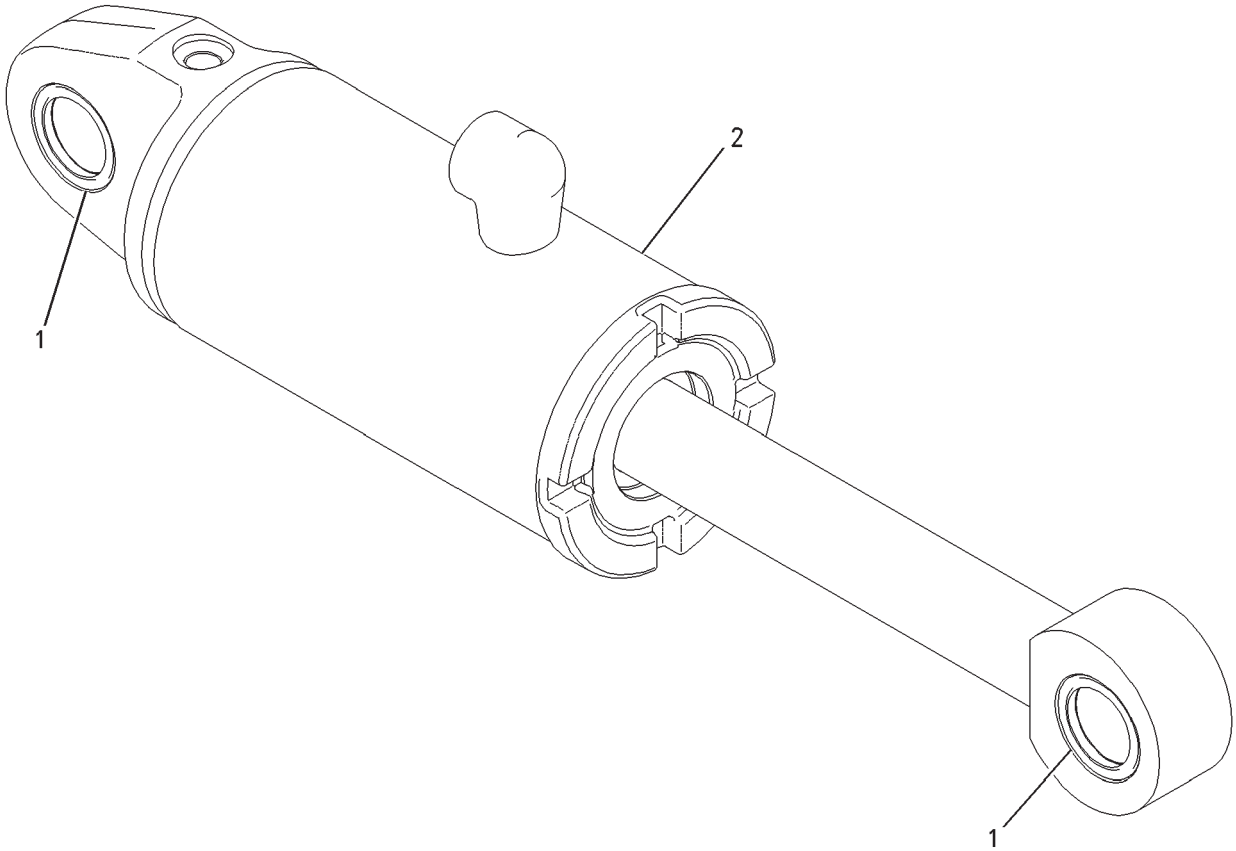

00897881

CYLINDER GP-STEERING - 183-4396

ITEM	NUMBER	QTY	DESCRIPTION
-	183-4396	--	CYLINDER GP-STEERING (W/BEARINGS) [A]
1	CH186-1000	2	BEARING-SLEEVE
2	CH189-6001	1	CYLINDER AS-STEERING (NOT SERVICED, ORDER CYLINDER GP W/BRGS) (SEE BREAKDOWN FOR COMPONENTS)

[A] PART OF 169-0027;169-0028;179-0852; 180-6639;186-0979 HITCH AR-3 POINT

00897881
PR: t05i29k58b0436

CYLINDER AS-0102-0408-Y

CH189-4911
101.6MM X 408MM (4 X 16.06")

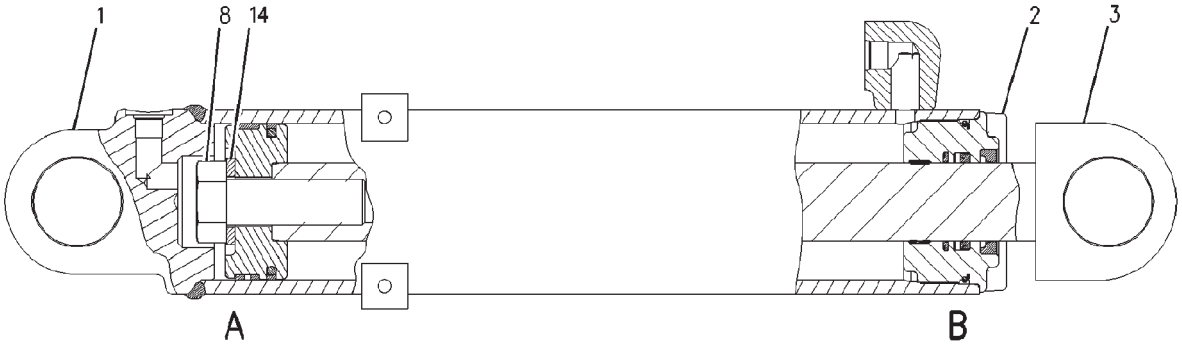

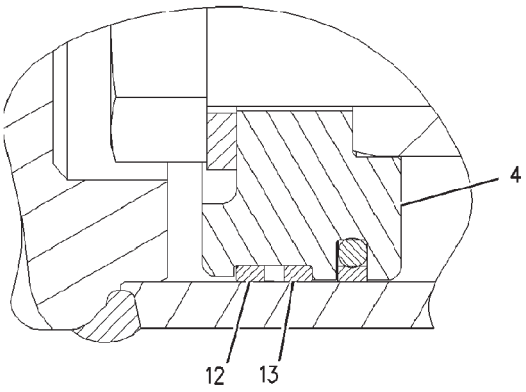

VIEW OF AREA A

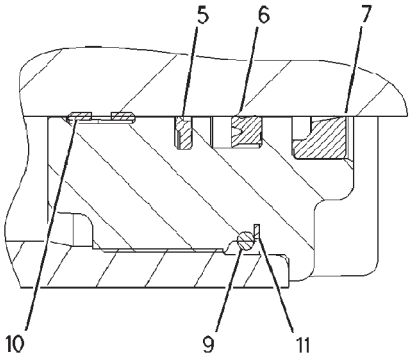

VIEW OF AREA B

CYLINDER AS-0102-0408-Y

CH189-4911
101.6MM X 408MM (4 X 16.06")

ITEM	NUMBER	QTY	DESCRIPTION
-	CH189-4911	--	CYLINDER AS-STEERING [A] (NOT SERVICED) (ORDER COMPLETE GP CH184-5034)
1	CH189-4882	1	CYLINDER ASM (DRAWBAR)
2	CH189-4888	1	HEAD
3	CH189-4906	1	ROD ASM
4	CH189-4907	1	PISTON
5	CH167-2195	1	SEAL ASM-BUFFER
6	502088D1	1	SEAL-U-CUP
7	CH167-2457	1	SEAL-WIPER
8	CH173-9683	1	BOLT-HEX HEAD (M30X3.5X90MM)
9	CH175-7900	1	SEAL-O-RING
10	CH189-6397	1	RING-WEAR
11	CH2K-6830	1	RING-BACKUP
12	CH5J-7154	1	RING-WEAR
13	CH8C-9160	1	SEAL ASM
14	CH9X-8399	1	WASHER (33X56X6)

[A] PART OF CH184-5034 CYLINDER GP

00852369
PR: t05i29k58b0437

CYLINDER AS-STEERING - CH189-6001

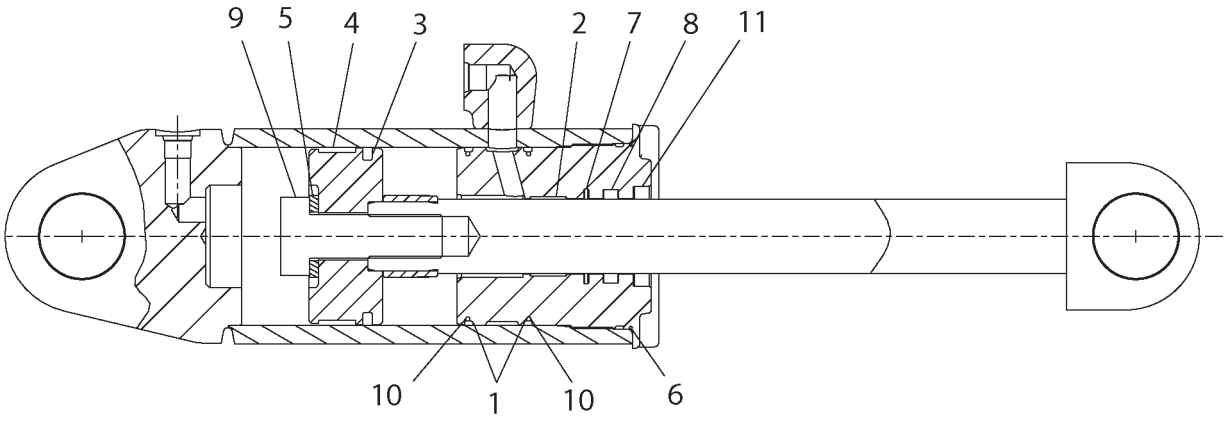

1896001A

CYLINDER AS-STEERING - CH189-6001

ITEM	NUMBER	QTY	DESCRIPTION
-	CH189-6001	--	CYLINDER AS-STEERING [A] (NOT SERVICED) (SERVICE W/COMPLETE GP 183-4396)
1	500967D1	2	RING-BACKUP
2	500968D1	1	RING-WEAR
3	500936D1	1	SEAL ASM
4	500939D1	1	RING-WEAR
5	500940D1	1	WASHER (33X56X6)
6	501820D1	1	SEAL-O-RING
7	501963D1	1	SEAL ASM-BUFFER
8	502088D1	1	SEAL-U-CUP
9	502095D1	1	BOLT-HEX HEAD (M30X3.5X90MM)
10	502096D1	2	SEAL-O-RING
11	502097D1	1	SEAL-WIPER

[A] PART OF 183-4396 CYLINDER GP-STEERING

1896001A
PR: t05i29k58b0438

DRAWBAR GP-WIDE SWINGING - 180-4036

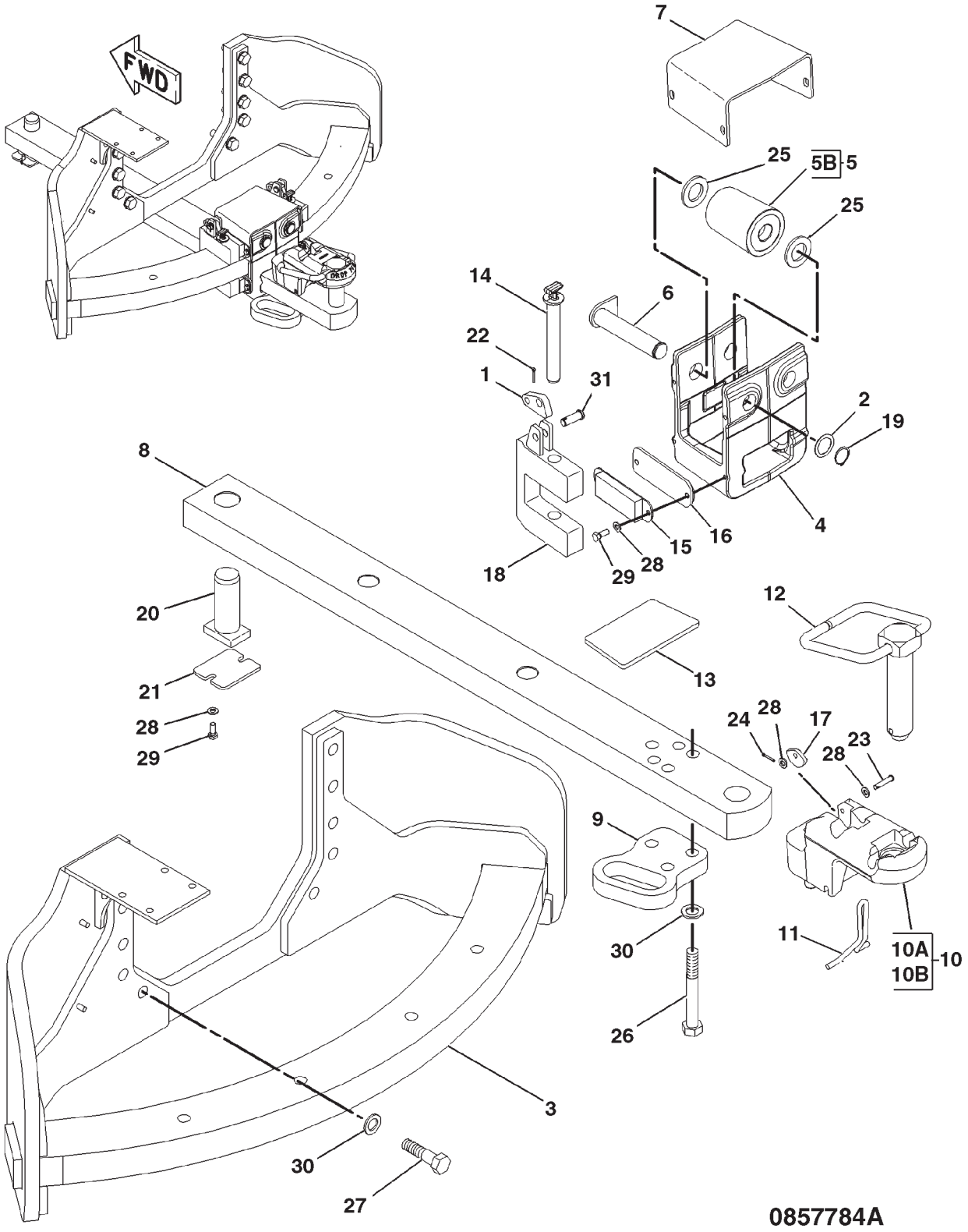

DRAWBAR GP-WIDE SWINGING - 180-4036

ITEM	NUMBER	QTY	DESCRIPTION
-	180-4036	--	DRAWBAR GP-SWINGING [A] (NOT SERVICED)
1	CH7B-0863	2	LATCH-PIN
2	CH117-0754	2	SHIM (1)
3	184-5042	1	PLATE ASM
	CH7T-1099	2	LINK
	400263X1	1	STUD
4	184-5049	1	BRACKET
5	184-5051	2	ROLLER ASM
5B	CH033-1097	2	BALL BEARING
6	184-5053	2	PIN ASM
7	184-5055	1	PLATE
8	184-5060	1	DRAWBAR
9	184-5062	1	PLATE
10	186-0994	1	CLEAVIS ASM (NOT SERVICED)
10A	186-0995	1	CLEVIS
10B	CH8K-0589	2	DOWEL
11	CH186-0996	1	PIN
12	CH186-0997	1	PIN (50MM DIA)
13	CH186-0998	1	PLATE
14	CH200-8747	2	PIN
15	CH200-8749	4	STOP
16	200-8750	2	PLATE
17	CH206-4627	1	LOCK
18	206-4631	2	PLATE ASM
19	CH1J-6474	2	RING-RETAINING
20	CH200-8751	1	PIN-DRAWBAR
21	CH206-4628	1	PLATE-RETAINING (SHOWN) (EARLY TYPE)
	501948D1	1	RETAINER-PIN (DUCTILE IRON) (LATER TYPE)
22	CH3B-4617	2	PIN-COTTER
23	CH177-3405	1	PIN
24	CH3B-4611	1	PIN-COTTER
25	400079X1	4	WASHER-HARD (37X60X3)
26	400182X1	3	BOLT (M24X3.0X180MM)
27	400036X1	10	BOLT (M24X3X90MM)
28	400287X1	12	WASHER-HARD (11X21X2.5)
29	400039X1	10	BOLT (M10X1.5X25MM)
30	400081X1	13	WASHER-HARD (26X44X4)
31	CH9S-1315	2	PIN-CLEVIS

[A] PART OF 184-5033 CONTROL AR-DRAWBAR

0857784A
PR: t05i29k58b0439

DRAWBAR GP-SWINGING
210-7507

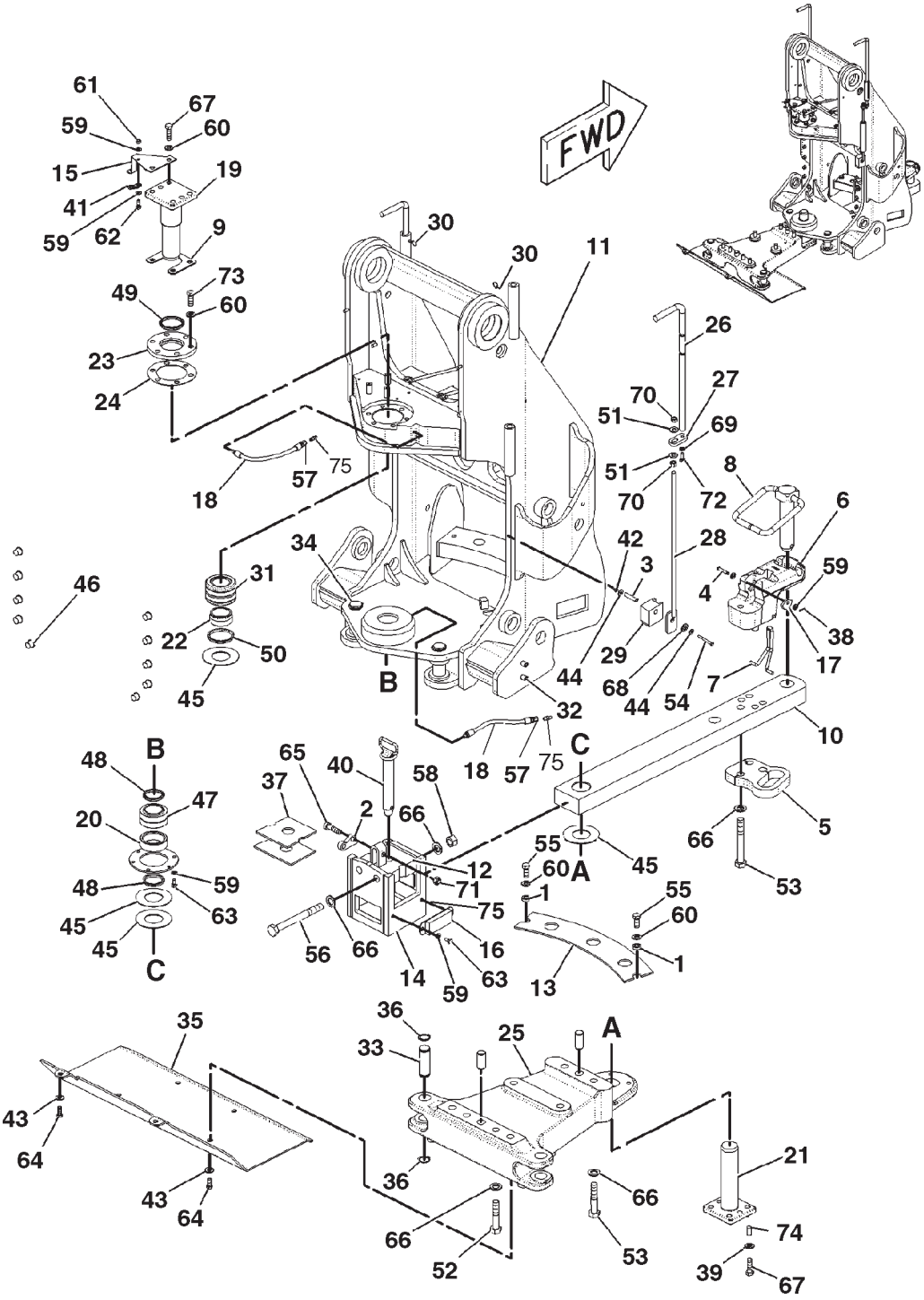

DRAWBAR GP-SWINGING
210-7507

ITEM	NUMBER	QTY	DESCRIPTION
-	210-7507	--	DRAWBAR GP-SWINGING [A] (NOT SERVICED)
1	CH4L-8183	2	SPACER (16.66X29.15X9.53)
2	CH150-8766	1	LATCH
3	CH164-7491	2	TUBE (50 MM)(SEE NOTE J)
4	CH177-3405	1	PIN
5	184-5062	1	PLATE
6	186-0994	1	CLEVIS ASM (NOT SERVICED)
	186-0995	1	CLEVIS
	8K-0589	2	DOWEL
7	CH186-0996	1	PIN
8	CH186-0997	1	PIN (50MM DIA)
9	186-1071	1	SHIM PACK
10	186-1077	1	DRAWBAR
11	186-1078	1	FRAME ASM-HITCH
	7T-1099	12	LINK
	8T-4219	5	STUD-WELD (M10X1.5X17.5MM)
	9R-2613	5	BOSS (M10X1.5X25MM)
12	196-3036	1	PLATE ASM
13	196-3037	1	PLATE
14	196-3052	1	BRACKET ASM
15	199-6265	1	BRACKET
16	CH200-8749	2	STOP ASM
17	CH206-4627	1	LOCK
18	CH210-7488	2	HOSE ASM
19	CH210-7492	1	PIN ASM (SERVICED COMPLETE)
20	210-7495	1	PLATE ASM
21	210-7497	1	PIN
22	CH210-7499	1	SPACER
23	210-7500	1	PLATE
24	210-7501	1	SHIM PACK
25	210-7504	1	PIVOT
26	210-7512	2	ROD
27	210-7513	2	PLATE
28	210-7514	2	ROD ASM
29	210-7515	2	BLOCK
30	CH210-7518	2	PIN
31	CH213-6199	1	BEARING-SELF-ALIGNING
32	CH193-5914	4	PLUG
33	CH196-3041	2	PIN
34	CH196-3042	2	PIN
35	200-8775	1	PLATE
36	CH201-8106	8	RING-RETAINING
37	206-4619	1	PLATE
38	CH3B-4611	1	PIN-COTTER
39	400078X1	4	WASHER-HARD (16.5X50X5)

CONTINUED

[A] PART OF: 169-0027; 169-0028;
179-0852; 180-6639; 186-0979 &
189-3300 HITCH AR-3 POINT

DRAWBAR GP-SWINGING
210-7507

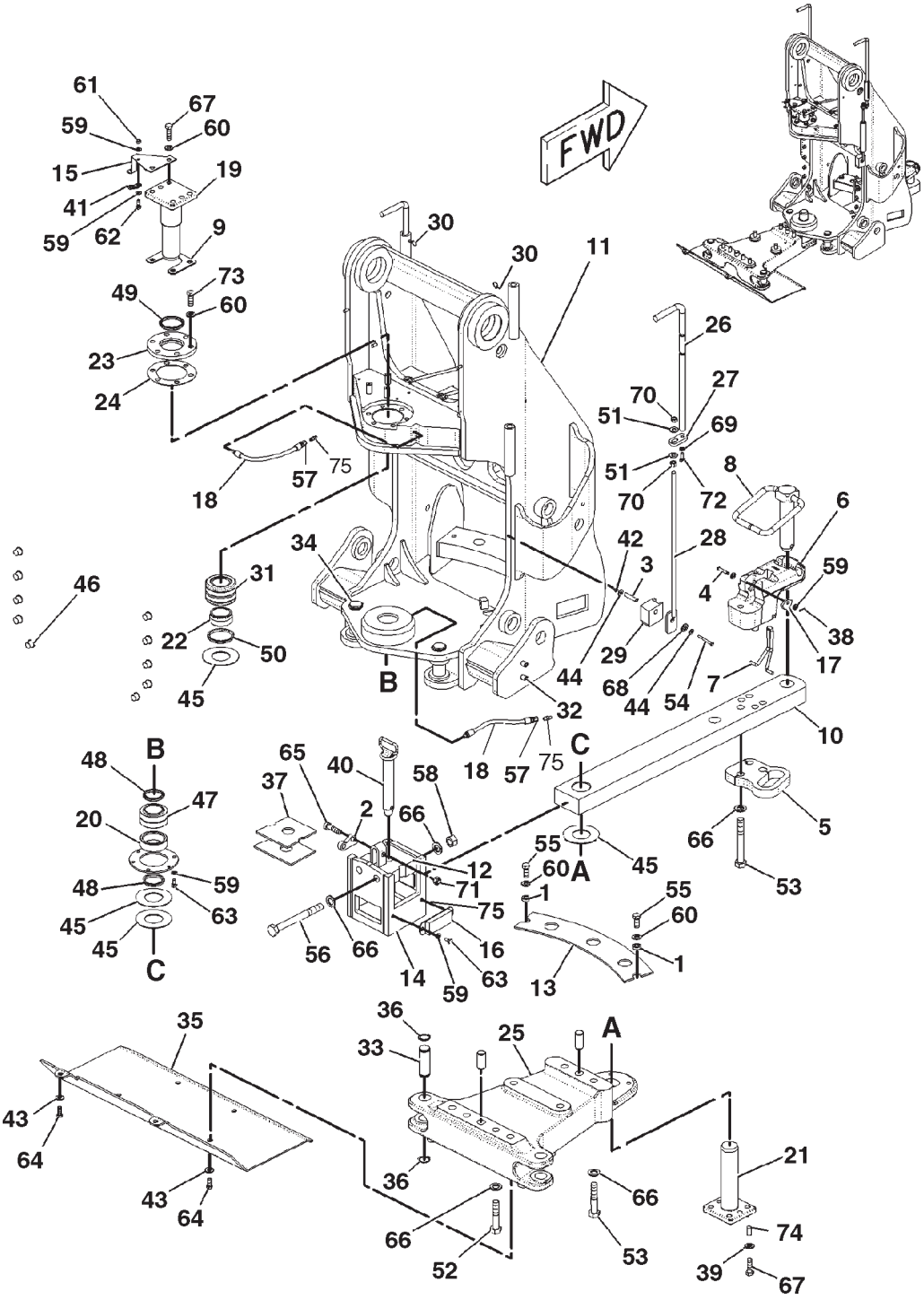

0898157A

DRAWBAR GP-SWINGING
210-7507

ITEM	NUMBER	QTY	DESCRIPTION
-	210-7507	--	DRAWBAR GP-SWINGING [A] (NOT SERVICED)
40	CH3W-6116	1	PIN
41	CH4P-7428	1	CLIP
42	400300X1	2	NUT (M6X1)
43	400381X1	6	WASHER-HARD (13.5X30X4)
44	CH5P-4115	4	WASHER-HARD (7.2X19X2)
45	CH5V-0354	4	WASHER (66X133X3.0)
46	400095X1	10	PLUG-PROTECTION
47	CH7J-1309	1	BEARING
48	CH7K-9205	2	SEAL-LIP
49	CH7K-9209	1	SEAL-LIP
50	CH7K-9210	1	SEAL-LIP
51	CH7X-0605	4	WASHER-HARD (13X28X1.6)
52	400025X1	6	BOLT (M24X3X110MM)
53	400182X1	9	BOLT (M24X3.0X180MM)
54	400187X1	2	BOLT (M6X1X60MM)
55	400191X1	2	BOLT (M16X2X40MM)
56	400198X1	2	BOLT (M24X3X240MM)
57	CH8L-6557	2	CONNECTOR
58	CH8T-4001	2	NUT (M24X3)
59	400287X1	14	WASHER-HARD (11X21X2.5)
60	CH8T-4122	12	WASHER-HARD (17X32X3.5)
61	WR522218	1	NUT (M10X1.5)
62	400039X1	1	BOLT (M10X1.5X25MM)
63	400040X1	10	BOLT (M10X1.5X20MM)
64	400041X1	6	BOLT (M12X1.75X30MM)
65	400222X1	1	BOLT (M16X2X60MM)
66	400081X1	19	WASHER-HARD (26X44X4)
67	400056X1	8	BOLT (M16X2X50MM)
68	400357X1	2	WASHER-HARD (M12X25.5X3)
69	400339X1	2	WASHER-HARD (8.8X16X2)
70	CH8T-4244	4	NUT (M12X1.75)
71	CH8T-4778	1	LOCKNUT (M16X2)
72	400341X1	2	BOLT (M8X1.25X25)
73	400244X1	6	BOLT (M16X2.0X45)
74	CH2A-1314	4	SPACER (16.7IDX25.4ODX23.8)
75	3B-8485	2	FITTING-GREASE (45 DEG X 2NPTF)

[A] PART OF: 169-0027; 169-0028;
179-0852; 180-6639; 186-0979 &
189-3300 HITCH AR-3 POINT

0898157A
PR: t05i29k58b0440

GUARD GP-CYLINDER - 200-8772
POWERED DRAWBAR

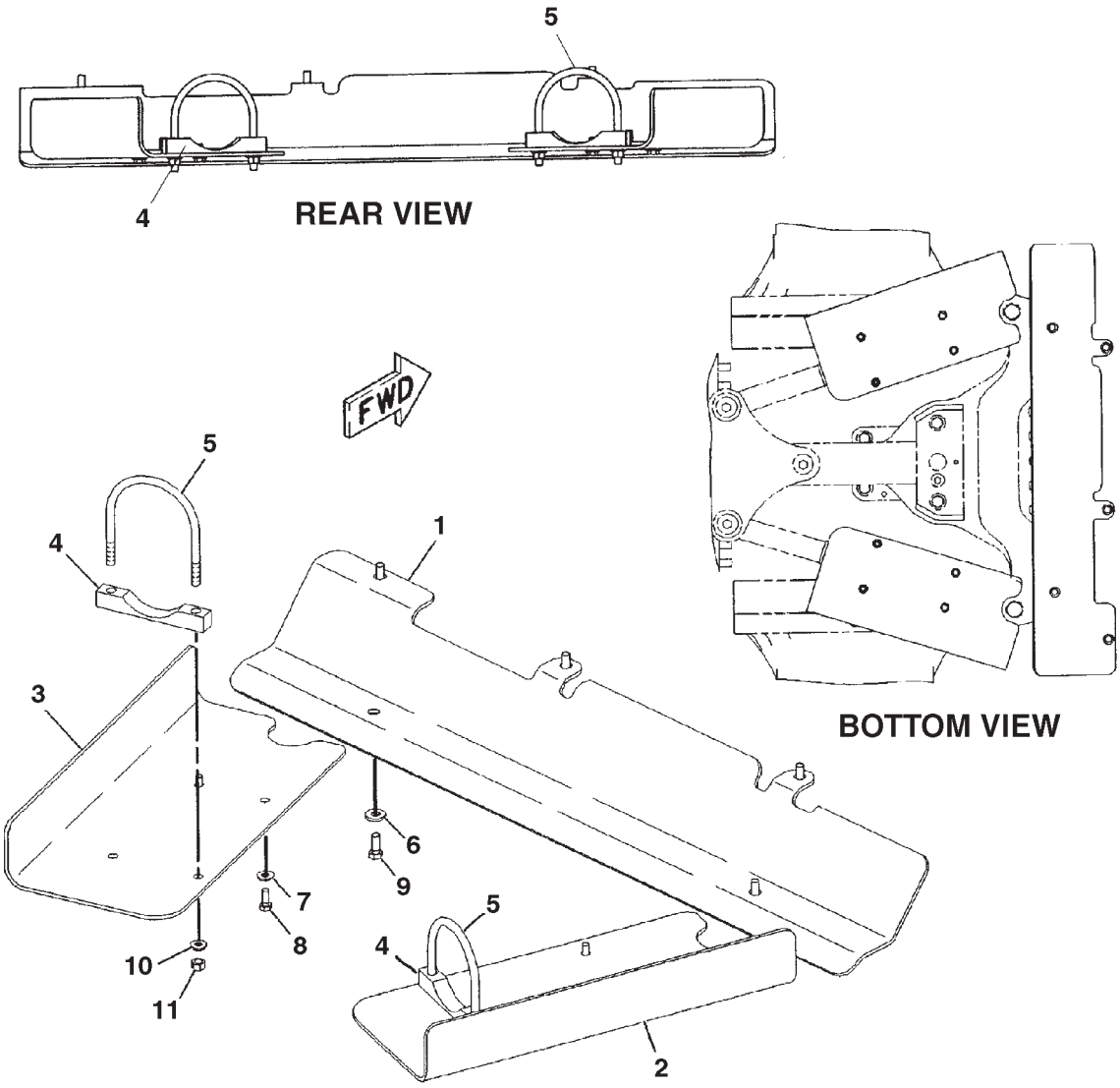

0852809A

GUARD GP-CYLINDER - 200-8772

POWERED DRAWBAR

ITEM	NUMBER	QTY	DESCRIPTION
-	200-8772	--	GUARD GP-CYLINDER [A] (NOT SERVICED)
1	200-8773	1	PLATE
2	206-4604	1	PLATE (LH)
3	206-4605	1	PLATE (RH)
4	206-4635	2	PLATE
5	CH147-7143	2	U-BOLT (M12X1.75)
6	400381X1	5	WASHER-HARD (13.5X30X4)
7	CH7X-7729	4	WASHER (11X25X3)
8	400039X1	4	BOLT (M10X1.5X25MM)
9	400041X1	5	BOLT (M12X1.75X30MM)
10	400357X1	4	WASHER-HARD (M12X25.5X3)
11	CH8T-4244	4	NUT (M12X1.75)

[A] PART OF 184-5033 & 210-7489
CONTROL AR-DRAWBAR

0852809A
PR: t05i29k58b0441

HITCH AR-3 POINT - 169-0027

CAT 3 & 4 NARROW-W/O HYD TRAILER BRAKES

NO ILLUSTRATION

NOTIF

HITCH AR-3 POINT - 169-0027

CAT 3 & 4 NARROW-W/O HYD TRAILER BRAKES

ITEM	NUMBER	QTY	DESCRIPTION
-	169-0027	--	HITCH AR-3 PT (ORDER ON DEALER CENTRAL)
1	136-5378	1	CONTROL & WIRING GP-HITCH (LIFT CIRCUIT) (NOT SERVICED) (SEE BREAKDOWN FOR COMPONENTS)
2	152-0445	1	CONTROL GP-HITCH (REAR)(3 POINT) (SEE BREAKDOWN FOR COMPONENTS)
3	179-3318	1	COUPLER GP-QUICK (SEE BREAKDOWN FOR COMPONENTS)
4	CH192-6280	2	CYLINDER GP-LIFT (SEE BREAKDOWN FOR COMPONENTS)
5	183-4396	2	CYLINDER GP-STEERING (HITCH LIFT) (SEE BREAKDOWN FOR COMPONENTS)
6	210-7507	1	DRAWBAR GP-SWINGING (NOT SERVICED) (SEE BREAKDOWN FOR COMPONENTS)
7	179-3317	1	HITCH GP-3 POINT (NOT SERVICED) (SEE BREAKDOWN FOR COMPONENTS)
8	158-2363	1	LINES GP-CYLINDER (3 POINT HITCH) (NOT SERVICED) (SEE BREAKDOWN FOR COMPONENTS)
9	192-4708	1	VALVE GP-BANK 3 (PRIORITY WITH HITCH) (SEE BREAKDOWN FOR COMPONENTS)

NOTIF
PR: t05i29k58b0442

HITCH AR-3 POINT (FIELD) - 169-0028
CATEGORY 4-W/O HYD TRAILER BRAKES

NO ILLUSTRATION

NOTIF

HITCH AR-3 POINT (FIELD) - 169-0028

CATEGORY 4-W/O HYD TRAILER BRAKES

ITEM	NUMBER	QTY	DESCRIPTION
-	169-0028	--	HITCH AR-3 POINT (ORDER ON WHOLEGOODS)
1	136-5378	1	CONTROL & WIRING GP-HITCH(LIFT CIRCUIT) (NOT SERVICED) (SEE BREAKDOWN FOR COMPONENTS)
2	152-0445	1	CONTROL GP-HITCH (REAR)(3 POINT) (SEE BREAKDOWN FOR COMPONENTS)
3	158-2363	1	LINES GP-CYLINDER (3 POINT HITCH) (NOT SERVICED) (SEE BREAKDOWN FOR COMPONENTS)
4	180-6640	1	COUPLER GP-QUICK (NOT SERVICED) (SEE BREAKDOWN FOR COMPONENTS)
5	192-4708	1	VALVE GP-BANK 3 (PRIORITY WITH HITCH) (SEE BREAKDOWN FOR COMPONENTS)
6	210-7507	1	DRAWBAR GP-SWINGING (NOT SERVICED) (SEE BREAKDOWN FOR COMPONENTS)
7	CH192-6280	2	CYLINDER GP-LIFT (SEE BREAKDOWN FOR COMPONENTS)
8	501503D1	1	DECAL SHEET-VEHICLE (SEE BREAKDOWN FOR COMPONENTS)
9	501504D1	--	DECAL SHEET-VEHICLE [A] (SEE BREAKDOWN FOR COMPONENTS)
10	501513D1	--	DECAL SHEET-TRANSLATIONS-ENGLISH (SEE BREAKDOWN FOR COMPONENTS)
11	183-4396	2	CYLINDER GP-STEERING (HITCH LIFT) (SEE BREAKDOWN FOR COMPONENTS)
12	184-5065	1	HITCH GP-3 POINT (NOT SERVICED) (SEE BREAKDOWN FOR COMPONENTS)
12	501806D1	1	TUBE AS

NOTIF
PR: t05i29k58b0443

HITCH AR-3 POINT - 179-0852
CATEGORY 3/4 W/STEERABLE

NO ILLUSTRATION

NOTIF

HITCH AR-3 POINT - 179-0852
CATEGORY 3/4 W/STEERABLE

ITEM	NUMBER	QTY	DESCRIPTION
-	179-0852	--	HITCH AR-3 POINT (NOT SERVICED)
	136-5378	1	CONTROL & WIRING GP-HITCH (NOT SERVICED) (SEE BREAKDOWN FOR COMPONENTS)
	152-0445	1	CONTROL GP-HITCH (SEE BREAKDOWN FOR COMPONENTS)
	179-3318	1	COUPLER GP-QUICK (SEE BREAKDOWN FOR COMPONENTS)
	CH192-6280	2	CYLINDER GP-LIFT (SEE BREAKDOWN FOR COMPONENTS)
	183-4396	2	CYLINDER GP-STEERING (SEE BREAKDOWN FOR COMPONENTS)
	210-7507	1	DRAWBAR GP-SWINGING (NOT SERVICED) (SEE BREAKDOWN FOR COMPONENTS)
	179-3317	1	HITCH GP-3 POINT (NOT SERVICED) (SEE BREAKDOWN FOR COMPONENTS)
	158-2363	1	LINES GP-CYLINDER (NOT SERVICED) (SEE BREAKDOWN FOR COMPONENTS)

NOTIF
PR: t05i29k58b0444

HITCH AR-3 POINT - 180-6639
CATEGORY 4 W/STEERABLE

NO ILLUSTRATION

NOTIF

HITCH AR-3 POINT - 180-6639
CATEGORY 4 W/STEERABLE

ITEM	NUMBER	QTY	DESCRIPTION
-	180-6639	--	HITCH AR-3 POINT
	136-5378	1	CONTROL & WIRING GP-HITCH (NOT SERVICED) (SEE BREAKDOWN FOR COMPONENTS)
	152-0445	1	CONTROL GP-HITCH (SEE BREAKDOWN FOR COMPONENTS)
	180-6640	1	COUPLER GP-QUICK (NOT SERVICED) (SEE BREAKDOWN FOR COMPONENTS)
	CH192-6280	2	CYLINDER GP-LIFT (SEE BREAKDOWN FOR COMPONENTS)
	183-4396	2	CYLINDER GP-STEERING (SEE BREAKDOWN FOR COMPONENTS)
	210-7507	1	DRAWBAR GP-SWINGING (NOT SERVICED) (SEE BREAKDOWN FOR COMPONENTS)
	184-5065	1	HITCH GP-3 POINT (NOT SERVICED) (SEE BREAKDOWN FOR COMPONENTS)
	158-2363	1	LINES GP-CYLINDER (NOT SERVICED) (SEE BREAKDOWN FOR COMPONENTS)

NOTIF
PR: t05i29k58b0445

HITCH AR-3 POINT (FIELD) - 186-0979

CATAGORY 3&4 NARROW-W/HYD TRAILER BRAKES
EAME ONLY

NO ILLUSTRATION

NOTIF

HITCH AR-3 POINT (FIELD) - 186-0979

CATAGORY 3&4 NARROW-W/HYD TRAILER BRAKES
EAME ONLY

ITEM	NUMBER	QTY	DESCRIPTION
-	186-0979	--	HITCH AR-3 POINT
1	136-5378	1	CONTROL & WIRING GP-HITCH (LIFT CIRCUIT) (NOT SERVICED) (SEE BREAKDOWN FOR COMPONENTS)
2	152-0445	1	CONTROL GP-HITCH (REAR)(3 POINT) (SEE BREAKDOWN FOR COMPONENTS)
3	158-2363	1	LINES GP-CYLINDER (3 POINT HITCH) (NOT SERVICED) (SEE BREAKDOWN FOR COMPONENTS)
4	179-3317	1	HITCH GP-3 POINT (NOT SERVICED) (SEE BREAKDOWN FOR COMPONENTS)
5	179-3318	1	COUPLER GP-QUICK (SEE BREAKDOWN FOR COMPONENTS)
6	193-8200	1	VALVE AR (PRIORITY WITH HITCH) (NOT SERVICED) (SEE BREAKDOWN FOR COMPONENTS)
7	210-7507	1	DRAWBAR GP-SWINGING (NOT SERVICED) (SEE BREAKDOWN FOR COMPONENTS)
8	CH192-6280	2	CYLINDER GP-LIFT (SEE BREAKDOWN FOR COMPONENTS)
9	501503D1	1	DECAL SHEET-VEHICLE (SEE BREAKDOWN FOR COMPONENTS)
10	501505D1	1	DECAL SHEET-VEHICLE (SEE BREAKDOWN FOR COMPONENTS)
11	183-4396	2	CYLINDER GP-STEERING (HITCH LIFT) (SEE BREAKDOWN FOR COMPONENTS)
12	501806D1	1	TUBE AS

NOTIF
PR: t05i29k58b0446

HITCH AR-3 POINT (FIELD) - 189-3300

CATEGORY 4-W/HYDRAULIC TRAILER BRAKES
EAME ONLY

NO ILLUSTRATION

NOTIF

HITCH AR-3 POINT (FIELD) - 189-3300

CATEGORY 4-W/HYDRAULIC TRAILER BRAKES
EAME ONLY

ITEM	NUMBER	QTY	DESCRIPTION
-	189-3300	--	HITCH AR-3 POINT
1	136-5378	1	CONTROL & WIRING GP-HITCH (LIFT CIRCUIT) (NOT SERVICED) (SEE BREAKDOWN FOR COMPONENTS)
2	152-0445	1	CONTROL GP-HITCH (REAR)(3 POINT) (SEE BREAKDOWN FOR COMPONENTS)
3	158-2363	1	LINES GP-CYLINDER (3 POINT HITCH) (NOT SERVICED) (SEE BREAKDOWN FOR COMPONENTS)
4	180-6640	1	COUPLER GP-QUICK (NOT SERVICED) (SEE BREAKDOWN FOR COMPONENTS)
5	193-8200	1	VALVE AR (W/HITCH & HYD TRAILER BRAKE) (NOT SERVICED) (SEE BREAKDOWN FOR COMPONENTS)
6	210-7507	1	DRAWBAR GP-SWINGING (NOT SERVICED) (SEE BREAKDOWN FOR COMPONENTS)
7	CH192-6280	2	CYLINDER GP-LIFT (SEE BREAKDOWN FOR COMPONENTS)
8	501503D1	1	DECAL SHEET-VEHICLE (SEE BREAKDOWN FOR COMPONENTS)
9	501505D1	1	DECAL SHEET-VEHICLE (SEE BREAKDOWN FOR COMPONENTS)
10	183-4396	2	CYLINDER GP-STEERING (HITCH LIFT) (SEE BREAKDOWN FOR COMPONENTS)
11	184-5065	1	HITCH GP-3 POINT (NOT SERVICED) (SEE BREAKDOWN FOR COMPONENTS)
12	501806D1	1	TUBE AS

NOTIF
PR: t05i29k58b0447

HITCH GP-3 POINT - 179-3317
CATEGORY 3/4

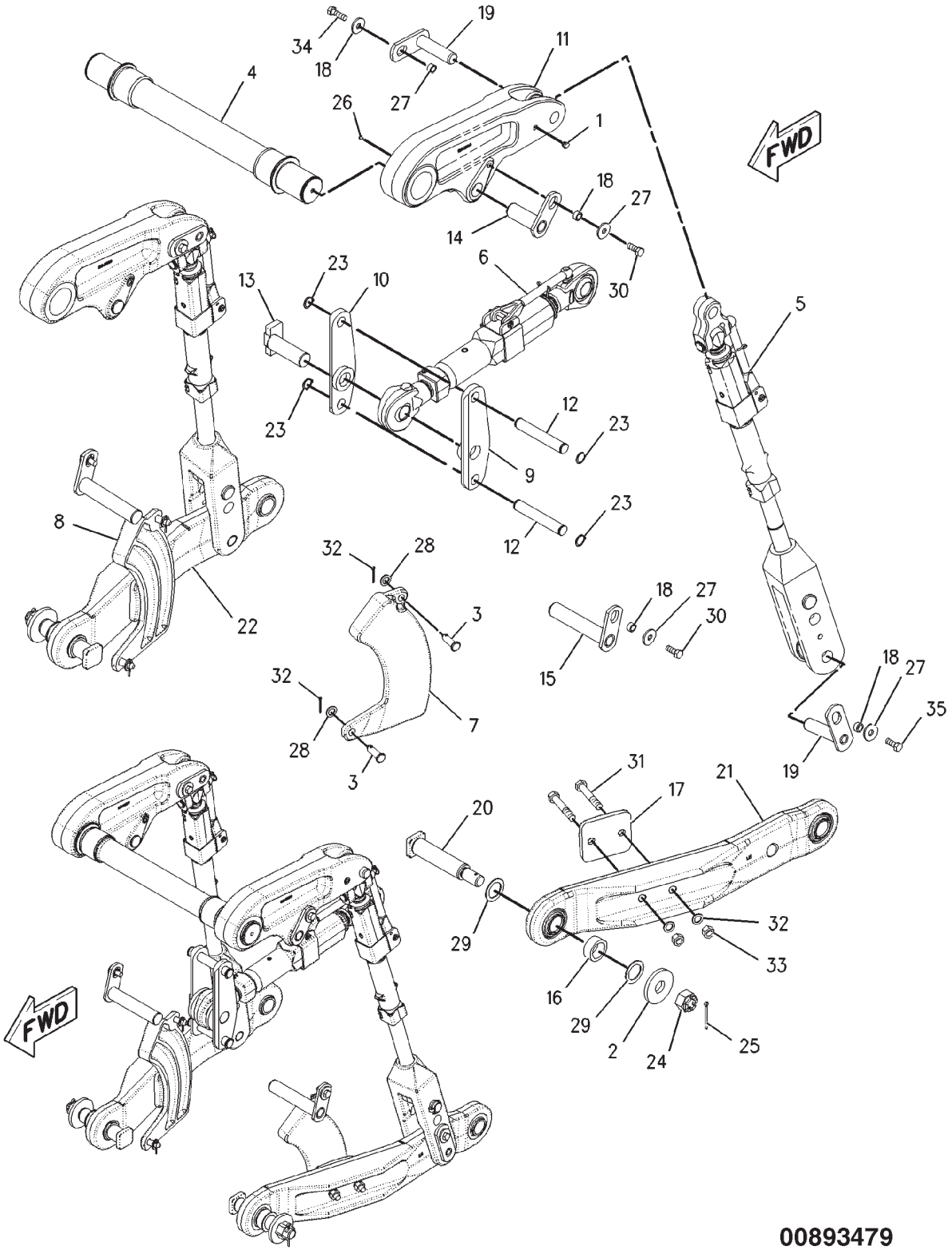

00893479

HITCH GP-3 POINT - 179-3317
CATEGORY 3/4

ITEM	NUMBER	QTY	DESCRIPTION
-	179-3317	--	HITCH GP-3 POINT [A] (NOT SERVICED)
1	400039X1	6	PLUG-SEAL
2	400291X1	2	SPACER (39X110X12)
3	CH152-4241	4	PIN
4	186-1063	1	ROCKSHAFT GP (NOT SERVICED) (SEE BREAKDOWN FOR COMPONENTS)
5	186-1090	2	LINK GP-LIFT (SEE BREAKDOWN FOR COMPONENTS)
6	186-1091	1	LINK GP-UPPER (SEE BREAKDOWN FOR COMPONENTS)
7	189-3307	1	LIMITER (LH)
8	189-3308	1	LIMITER (RH)
9	190-2608	1	SUPPORT ASM
10	190-2609	1	SUPPORT ASM
11	190-2624	2	ARM-LIFT
12	CH190-2634	2	PIN
13	CH196-3019	1	PIN ASM
14	CH196-3025	2	PIN ASM
15	CH196-3030	2	PIN ASM
16	CH196-3034	2	SPACER (51X70X28)
17	198-8378	2	BLOCK
18	CH200-0010	8	SPACER (17.5X25.4X12.5)
19	CH200-8708	4	PIN ASM
20	CH206-4640	2	PIN
21	213-7061	1	LINK ASM (LH) (INCLUDES LINK, BALL AND RACE)
22	213-7062	1	LINK ASM (RH) (INCLUDES LINK, BALL AND RACE)
23	400290X1	4	RING-RETAINING
24	400285X1	2	NUT-CASTLE (M36X4-6H)
25	400283X1	2	PIN-COTTER
26	400289X1	1	PLUG
27	400078X1	8	WASHER (16.5X50X5)
28	400284X1	4	PIN-COTTER
29	400288X1	4	WASHER-HARD (51X74X3)
30	400191X1	4	BOLT (M16X2X40MM)
31	400033X1	4	BOLT (M20X2.5X110MM)
32	400080X1	8	WASHER-HARD (22X35X3.5)
33	400286X1	4	NUT (M20X2.5)
34	400056X1	2	BOLT (M16X2X50MM)
35	400244X1	2	BOLT (M16X2.0X45MM)

[A] PART OF:
169-0027; 179-0852; 186-0979
HITCH AR-3 POINT

00893479
PR: t05i29k58b0448

HITCH GP-3 POINT - 184-5065

CATEGORY 4

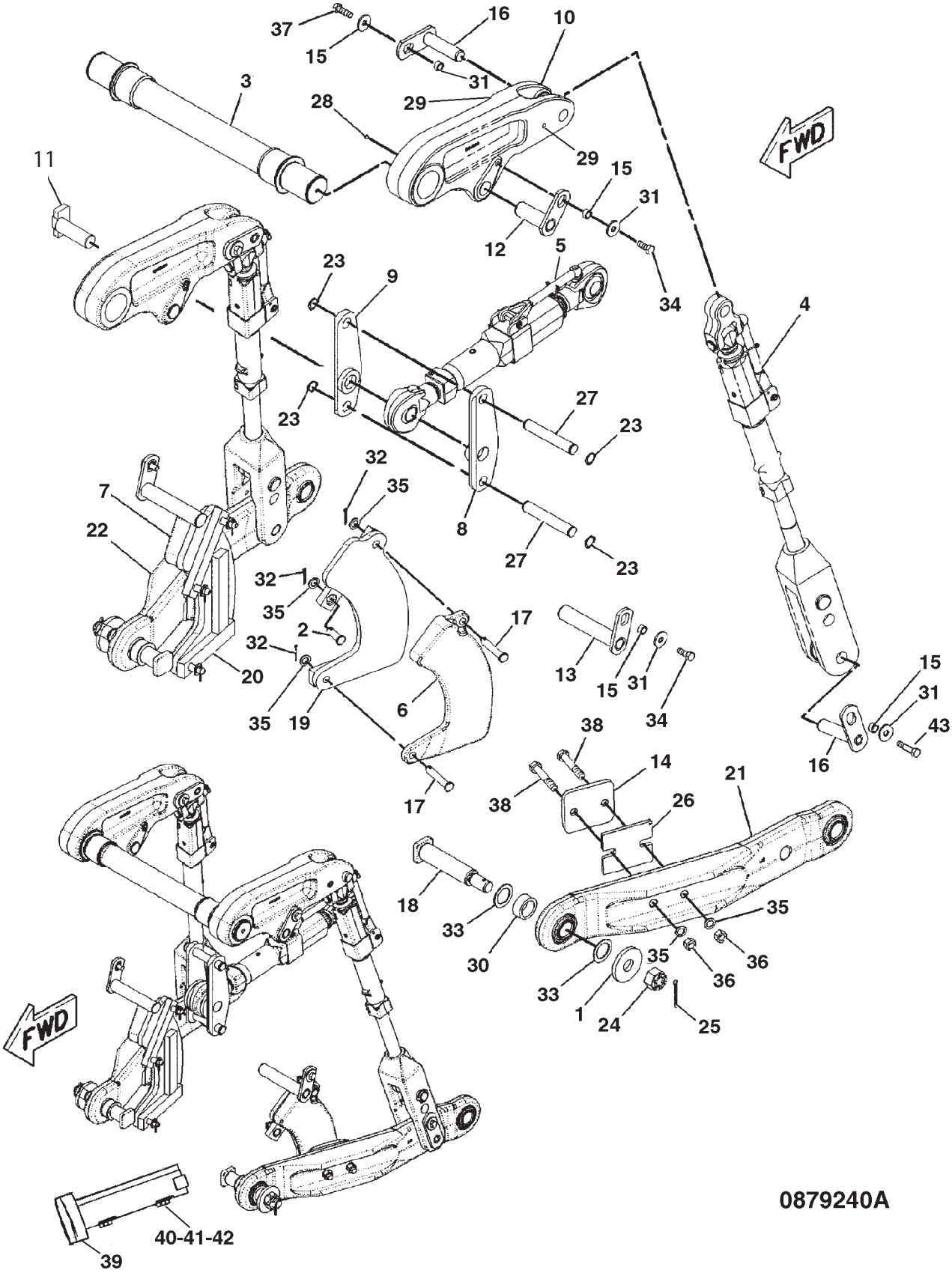

HITCH GP-3 POINT - 184-5065
CATEGORY 4

ITEM	NUMBER	QTY	DESCRIPTION
-	184-5065	--	HITCH GP-3POINT [A] (NOT SERVICED)
1	400291X1	2	SPACER (39X110X12)
2	CH152-4241	2	PIN
3	186-1063	1	ROCKSHAFT GP (NOT SERVICED) (SEE BREAKDOWN FOR COMPONENTS)
4	186-1090	2	LINK GP-LIFT (SEE BREAKDOWN FOR COMPONENTS)
5	186-1091	1	LINK GP-UPPER (SEE BREAKDOWN FOR COMPONENTS)
6	189-3307	1	LIMITER (LH)
7	189-3308	1	LIMITER (RH)
8	190-2608	1	SUPPORT ASM (TOP LINK LH)
9	190-2609	1	SUPPORT ASM (TOP LINK RH)
10	190-2624	2	ARM-LIFT (3 POINT HITCH)
11	CH196-3019	1	PIN
12	CH196-3025	2	PIN ASM (LH)
13	CH196-3030	2	PIN ASM (LH)
14	198-8378	2	BLOCK
15	CH200-0010	8	SPACER (17.5X25.4X12.5)
16	CH200-8708	4	PIN ASM (QUICK COUPLER)
17	CH223-9804	4	PIN
18	CH206-4640	2	PIN (DRAFTARM)
19	208-0563	1	SPACER ASM (LH)
20	208-0564	1	SPACER ASM (RH)
21	213-7061	1	LINK ASM (LH) (INCL. LINK, BALL & RACE)
22	213-7062	1	LINK ASM (RH) (INCL. LINK, BALL & RACE)
23	400290X1	4	RING-RETAINING,EXT (29IDX2.36)
24	400285X1	2	NUT-CASTLE (M36X4-6H)
25	400283X1	2	PIN-COTTER (6.3DIAX80)
26	189-3302	2	SPACER (SWAY BLOCK)
27	CH190-2634	2	PIN-TOP LINK SUPT (31.7DIAX194)
28	400289X1	1	PLUG-PROTECTIVE, PLASTIC (M7)
29	400093X1	6	PLUG-PROTECTIVE, PLASTIC (M14)
30	CH196-3034	2	SPACER (51X70X28)
31	400078X1	8	WASHER (16.5X50X5)
32	400284X1	6	PIN-COTTER
33	400288X1	4	WASHER-HARD (51X74X3)
34	400191X1	4	BOLT (M16X2X40MM)
35	400080X1	18	WASHER-PLATED (22X35X3.5)
36	400286X1	4	NUT (M20X2.5)
37	400056X1	2	BOLT (M16X2X50MM)
38	400236X1	4	BOLT (M20X2.5X120MM)
39	201-8342	2	LIMITER ASM-LG
40	400040X1	8	BOLT (M10X1.5X20)
41	400287X1	8	WASHER-HARD
42	201-8344	4	PLATE
43	400244X1	2	BOLT (M16X2X45)

[A] PART OF 169-0028;180-6639;189-3300
HITCH AR-3 POINT

0879240A
PR: t05i29k58b0449

LINES GP-CYLINDER - 158-2363
3 POINT HITCH

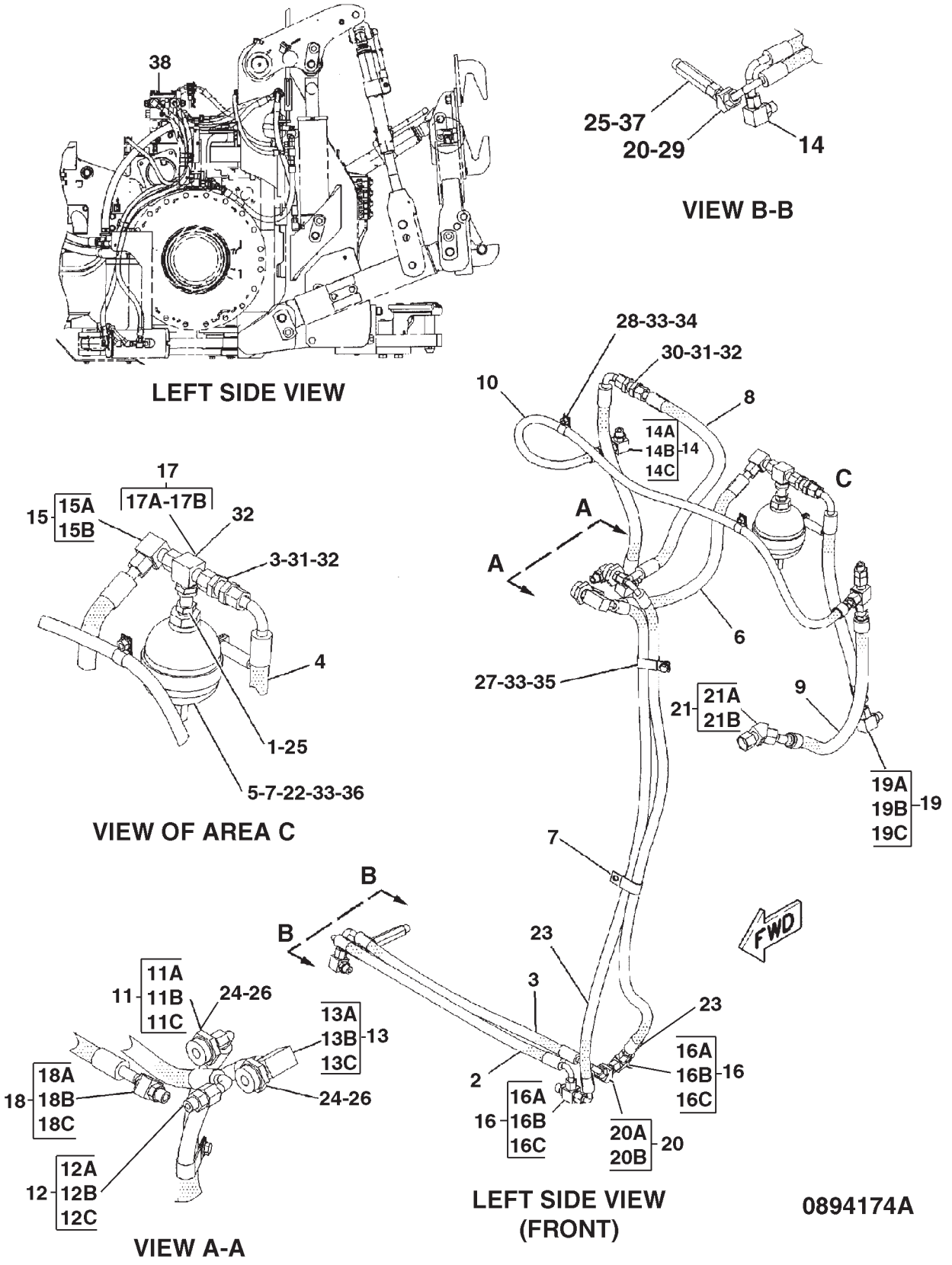

LINES GP-CYLINDER - 158-2363

3 POINT HITCH

ITEM	NUMBER	QTY	DESCRIPTION
-	158-2363	--	LINES GP-CYLINDER [A] (NOT SERVICED)
1	CH108-7251	1	COUPLING
2	CH174-5810	1	HOSE ASM
3	CH174-9215	1	HOSE ASM
4	CH197-4832	2	HOSE ASM
5	CH199-7718	1	CLAMP
6	CH211-9968	1	HOSE ASM
7	CH212-0279	1	SPACER
8	CH213-6273	1	HOSE ASM
9	CH213-8872	1	HOSE ASM
10	CH218-2969	1	HOSE ASM
11	CH148-8340	1	CONNECTOR AS -8ORFS-8STOR
11A	CH3K-0360	1	SEAL-O-RING (16.36IDX2.21DIA)
11B	CH6V-8398	1	SEAL-O-RING (16.03ODX1.78DIA)
11C	-----	1	CONNECTOR (ORDER ITEM 11)
12	CH148-8342	2	CONNECTOR AS (20ORFSX20STOR)
12A	CH3K-0360	1	SEAL-O-RING
12B	-----	1	CONNECTOR (ORDER ITEM 12)
12C	400322X1	1	SEAL-O-RING
13	CH148-8346	1	ELBOW AS-90DEG (8STOR-8ORFS)
13A	CH3K-0360	1	SEAL-O-RING (16.36IDX2.21DIA)
13B	CH6V-8398	1	SEAL-O-RING (16.03ODX1.78DIA)
13C	-----	1	ELBOW (ORDER ITEM 13)
14	CH148-8364	2	ELBOW AS-90DEG (10 PORT ORFS)
14A	CH3K-0360	1	SEAL-O-RING (16.36IDX2.21DIA)
14B	CH6V-8398	1	SEAL-O-RING (16.03ODX1.78DIA)
14C	-----	1	ELBOW (ORDER ITEM 14)

CONTINUED

[A] PART OF 169-0027;169-0028;179-0852;
180-6639 HITCH AR-3 POINT
[B] PART REQUIRED WHEN HOSE ASM IS
SERVICED WITH REUSABLE COUPLINGS

LINES GP-CYLINDER - 158-2363
3 POINT HITCH

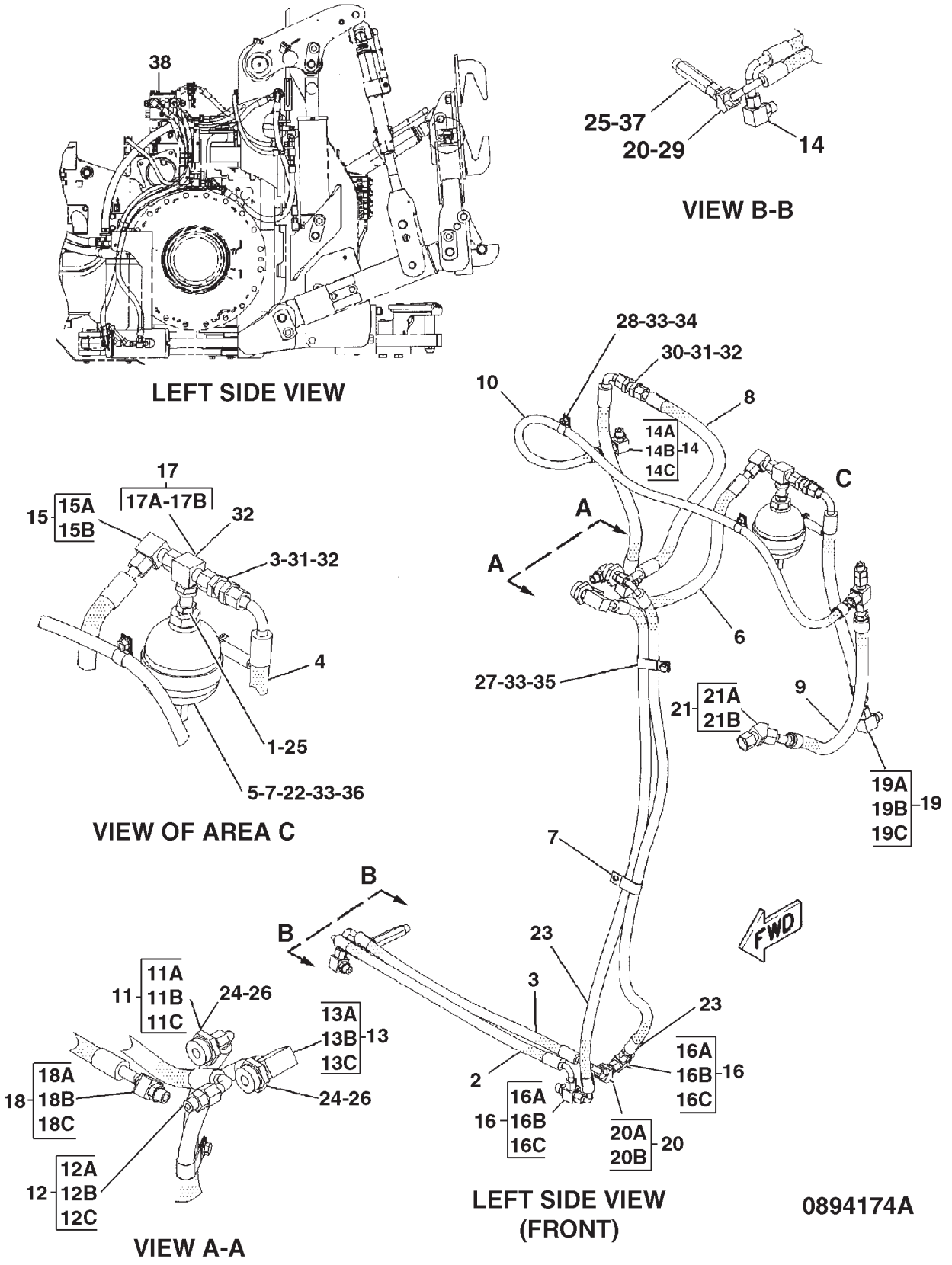

LINES GP-CYLINDER - 158-2363
3 POINT HITCH

ITEM	NUMBER	QTY	DESCRIPTION
-	158-2363	--	LINES GP-CYLINDER [A] (NOT SERVICED)
15	CH148-8393	1	ELBOW AS-90DEG (10ORFS SWIVEL)
15A	-----	1	ELBOW (ORDER ITEM 15)
15B	400322X1	1	SEAL-O-RING (19.28IDX1.78DIA)
16	CH148-8428	2	TEE AS (8ORFSX8ORFSX8STOR)
16A	CH3K-0360	1	SEAL-O-RING
16B	CH6V-8398	2	SEAL-O-RING (16.03ODX1.78DIA)
16C	-----	1	TEE-FACE SEAL (ORDER ITEM 16)
17	CH148-8446	2	TEE AS-SWIVEL (10ORFSX3)
17A	-----	1	TEE-SWIVEL (ORDER ITEM 17)
17B	400322X1	2	SEAL-O-RING (19.28IDX1.78DIA)
18	CH150-3037	1	ELBOW AS-45DEG (10ORFSX8STOR)
18A	CH3K-0360	1	SEAL-O-RING
18B	400322X1	1	SEAL-O-RING (19.28IDX1.78DIA)
18C	-----	1	ELBOW (ORDER ITEM 18)
19	400412X1	2	ELBOW AS-90DEG (8STORX10ORFS)
19A	CH3K-0360	1	SEAL-O-RING (16.36IDX2.21DIA)
19B	-----	1	ELBOW (ORDER ITEM 18)
19C	400322X1	1	SEAL-O-RING (19.28IDX1.78DIA)
20	400616X1	2	ELBOW AS-8 ORFS 45DEG
20A	CH6V-8398	1	SEAL-O-RING (16.03ODX1.78DIA)
20B	-----	1	ELBOW (ORDER ITEM 20)
21	CH171-6723	1	ELBOW ASM-45DEG (12ORFSX12ORFS)
21A	400366X1	1	SEAL-O-RING (22.5ODX1.78DIA)
21B	-----	1	ELBOW (ORDER ITEM 21)
22	211-1156	1	ACCUMULATOR ASM-HYDRAULIC
23	CH211-8202	2	HOSE ASM
24	400593X1	2	SEAL-O-RING (37.46IDX3DIA)
25	CH3K-0360	2	SEAL-O-RING (16.36IDX2.21DIA)
26	CH5P-8905	2	ADAPTER-O-RING
27	CH6D-1641	2	CLIP
28	CH6D-4246	2	CLIP
29	CH6V-8398	1	SEAL-O-RING (16.03ODX1.78DIA)
30	CH6V-8996	2	UNION-BULKHEAD
31	CH6V-9170	2	NUT-BULKHEAD (1-14)
32	400322X1	4	SEAL-O-RING
33	400287X1	4	WASHER-HARD (11X21X2.5)
34	WR522218	2	NUT (M10X1.5)
35	400040X1	1	BOLT (M10X1.5X20MM)
36	400225X1	1	BOLT (M10X1.5X90MM)
37	CH9X-2304	1	CONNECTOR
38	CH193-5914	1	PLUG

[A] PART OF 169-0027;169-0028;179-0852;
180-6639 HITCH AR-3 POINT
[B] PART REQUIRED WHEN HOSE ASM IS
SERVICED WITH REUSABLE COUPLINGS

LINES GP-CYLINDER - 180-0503
POWERED DRAWBAR

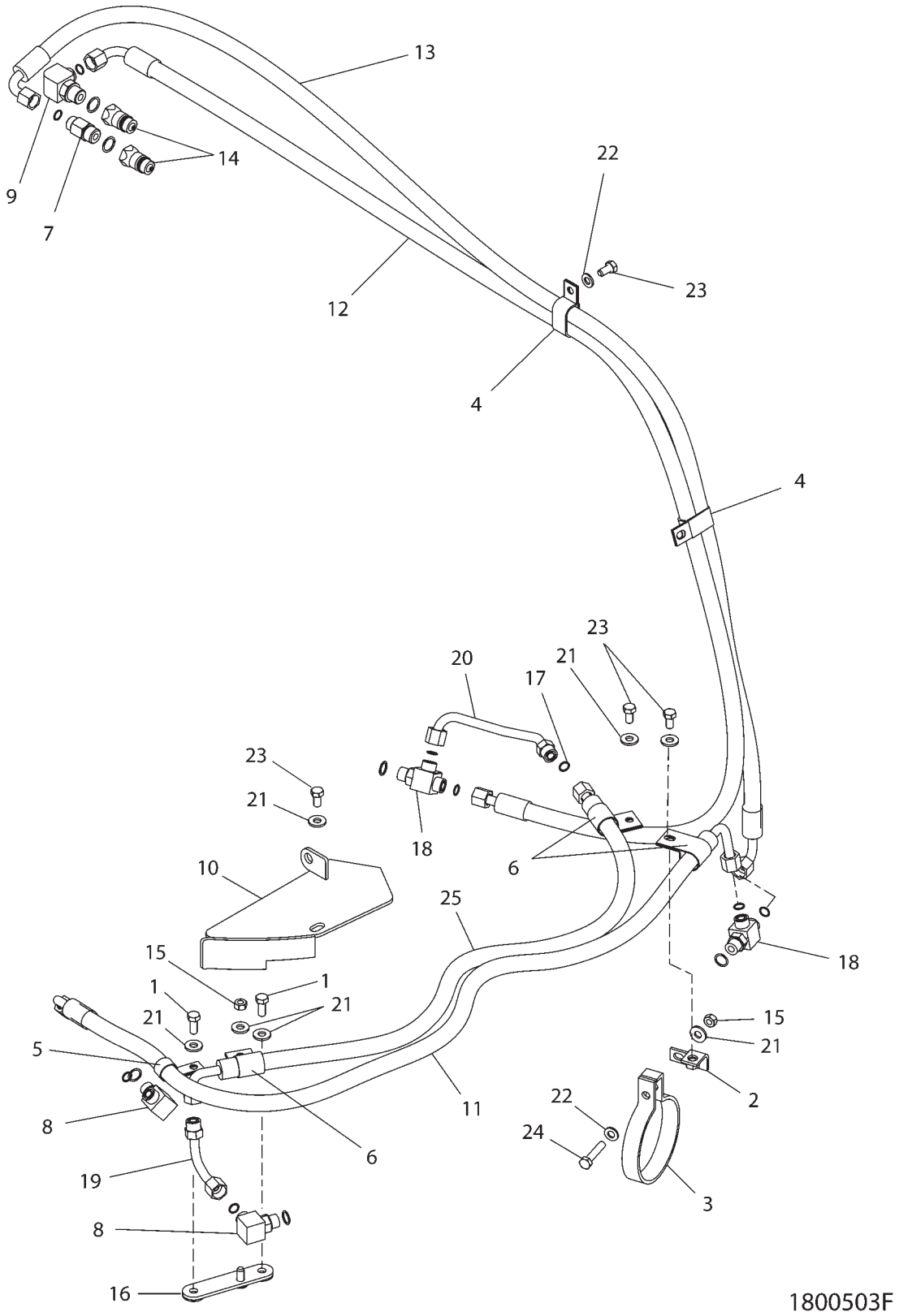

LINES GP-CYLINDER - 180-0503
POWERED DRAWBAR

ITEM	NUMBER	QTY	DESCRIPTION
-	180-0503	--	LINES GP-CYLINDER [A] (NOT SERVICED)
1	400039X1	2	BOLT (M10X1.5X25MM)
2	209-6244	1	BRACKET ASM
3	CH122-1162	1	CLAMP
4	CH6D-1641	2	CLIP-LOOP (24IDX2)
5	CH4L-3641	1	CLIP (25.4ID)
6	CH5D-4204	3	CLIP (28.58ID)
7	CH164-5557	1	CONNECTOR ASM (8ORFSX10STOR)
	400319X1	1	SEAL-O-RING (19.18IDX2.46DIA)
	CH6V-8398	1	SEAL-O-RING (16.03ODX1.78DIA)
8	CH148-8364	2	ELBOW AS-90DEG (8STOR-8ORFS)
	CH3K-0360	1	SEAL-O-RING (16.36IDX2.21DIA)
	CH6V-8398	1	SEAL-O-RING (16.03ODX1.78DIA)
9	CH148-8372	1	ELBOW AS (10STOR-8ORFS)
	400319X1	1	SEAL-O-RING (19.18IDX2.46DIA)
	CH6V-8398	1	SEAL-O-RING (16.03ODX1.78DIA)
10	210-6063	1	GUARD ASM
11	CH211-2723	1	HOSE ASM
12	CH211-2724	1	HOSE ASM
13	CH211-2725	1	HOSE ASM
14	CH159-5898	2	FITTING ASM
15	WR522218	2	NUT (M10X1.5)
16	209-9800	1	PLATE ASM
17	CH6V-8398	2	SEAL-O-RING (16.03ODX1.78DIA)
18	CH148-8428	2	TEE AS (8ORFSX8ORFSX8STOR)
	CH3K-0360	1	SEAL-O-RING (16.36IDX2.21DIA)
	CH6V-8398	2	SEAL-O-RING (16.03ODX1.78DIA)
19	210-1503	1	TUBE ASM
20	210-4464	1	TUBE ASM
21	CH7X-7729	7	WASHER (11X25X3)
22	400287X1	2	WASHER-HARD (11X21X2.5)
23	400040X1	4	BOLT (M10X1.5X20MM)
24	400226X1	1	BOLT (M10X1.5X50MM)
25	CH211-2722	1	HOSE ASM

[A] PART OF 184-5033 & 210-7489
CONTROL AR-DRAWBAR

1800503F
PR: t05i29k58b0451

LINES GP-POWER TAKE-OFF - 189-2976

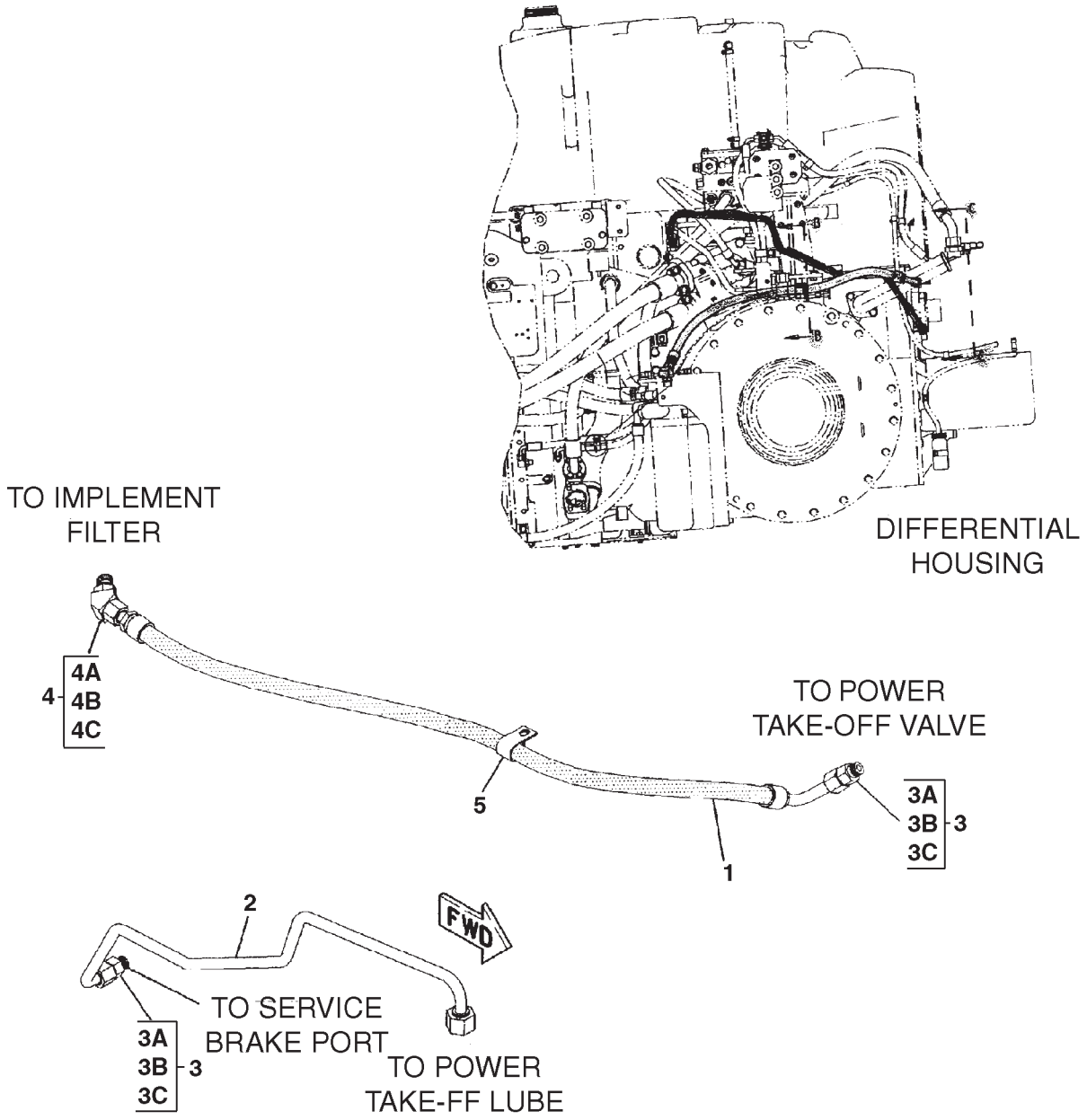

LINES GP-POWER TAKE-OFF - 189-2976

ITEM	NUMBER	QTY	DESCRIPTION
-	189-2976	--	LINES GP-PTO [A] (NOT SERVICED)
1	211-2885	1	HOSE ASM (15.9ID SAE 100R1)
2	219-8801	1	TUBE ASM
3	CH148-8342	2	CONNECTOR AS (20ORFSX20STOR)
3A	CH3K-0360	1	SEAL-O-RING (16.36IDX2.21DIA)
3B	-----	1	CONNECTOR (ORDER ITEM 12)
3C	400322X1	1	SEAL-O-RING (19.28IDX1.78DIA)
4	CH155-3504	1	ELBOW AS-45DEG (10ORFSX10STOR)
4A	400319X1	1	SEAL-O-RING (19.18IDX2.46DIA)
4B	-----	1	ELBOW (ORDER ITEM 4)
4C	400322X1	1	SEAL-O-RING (19.28IDX1.78DIA)
5	CH4S-1962	1	CLIP-LOOP (25.4ID)

[A] PART OF 163-0400; 224-8603 KIT-PTO;
183-2197; 183-2198 GAUGE AR-TRACK

0888048A
PR: t05i29k58b0452

LINK GP-LIFT
186-1090

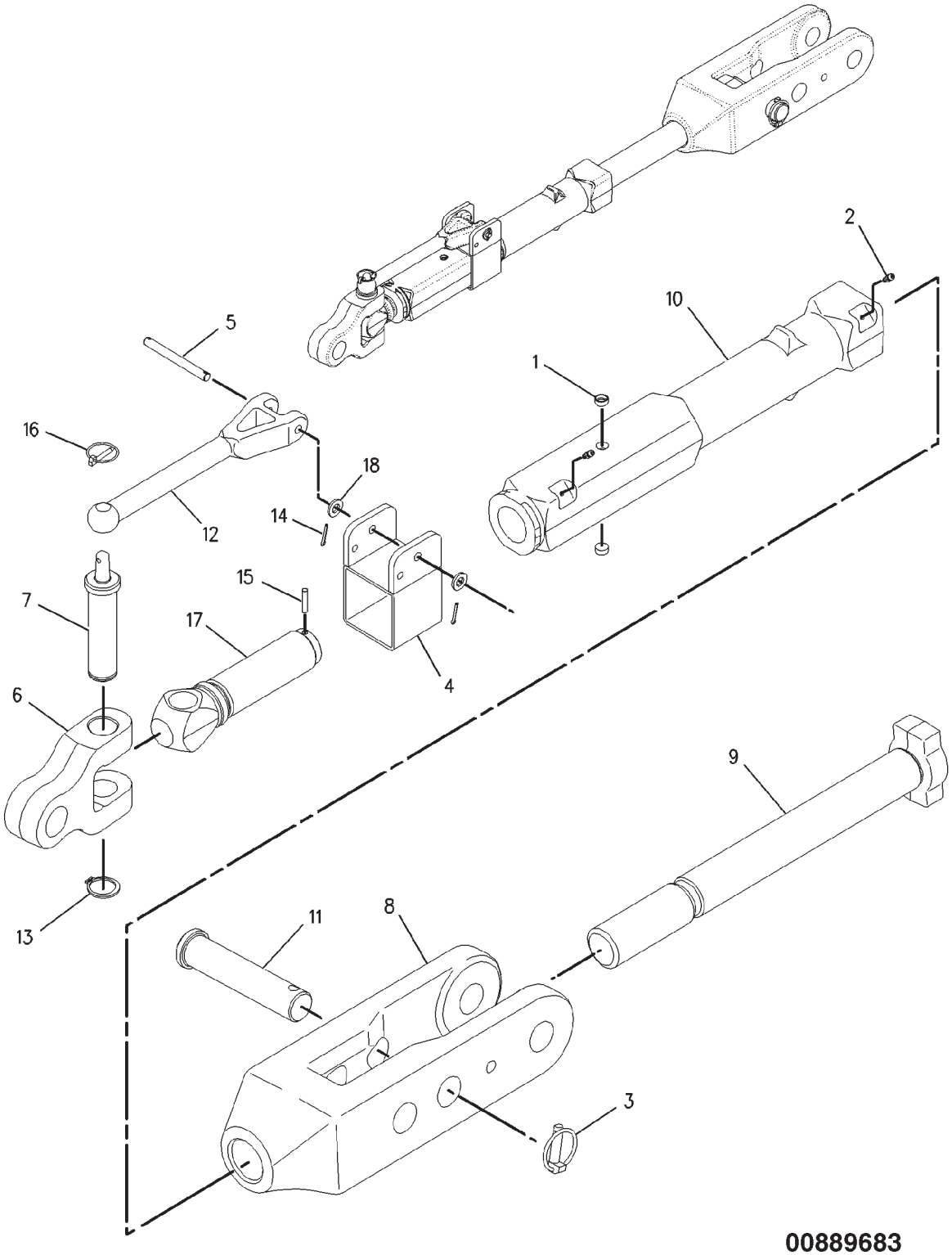

LINK GP-LIFT
186-1090

ITEM	NUMBER	QTY	DESCRIPTION
-	186-1090	--	LINK GP-LIFT [A]
1	CH0T-0200	2	PLUG-CUP
2	CH6V-1506	2	FITTING-GREASE
3	CH119-1329	1	PIN-LINCH
4	184-5063	1	FRAME ASM
5	CH186-1069	1	PIN
6	186-0983	1	PIVOT
7	CH186-1081	1	PIN
8	186-1093	1	CLEVIS
9	CH186-1094	1	ROD-LIFT LINK
10	186-1095	1	TUBE
11	CH186-1096	1	PIN
12	189-3296	1	HANDLE
13	400290X1	1	RING-RETAINING
14	CH095-0845	2	PIN-COTTER
15	CH095-9230	1	PIN-SPRING
16	CH5D-8159	1	PIN ASM
17	186-1020	1	ROD END-LOWER
18	400287X1	2	WASHER-HARD (11X21X2.5)

[A] PART OF 179-3317; 184-5065
HITCH GP-3 POINT

00889683
PR: t05i29k58b0453

LINK GP-UPPER
186-1091

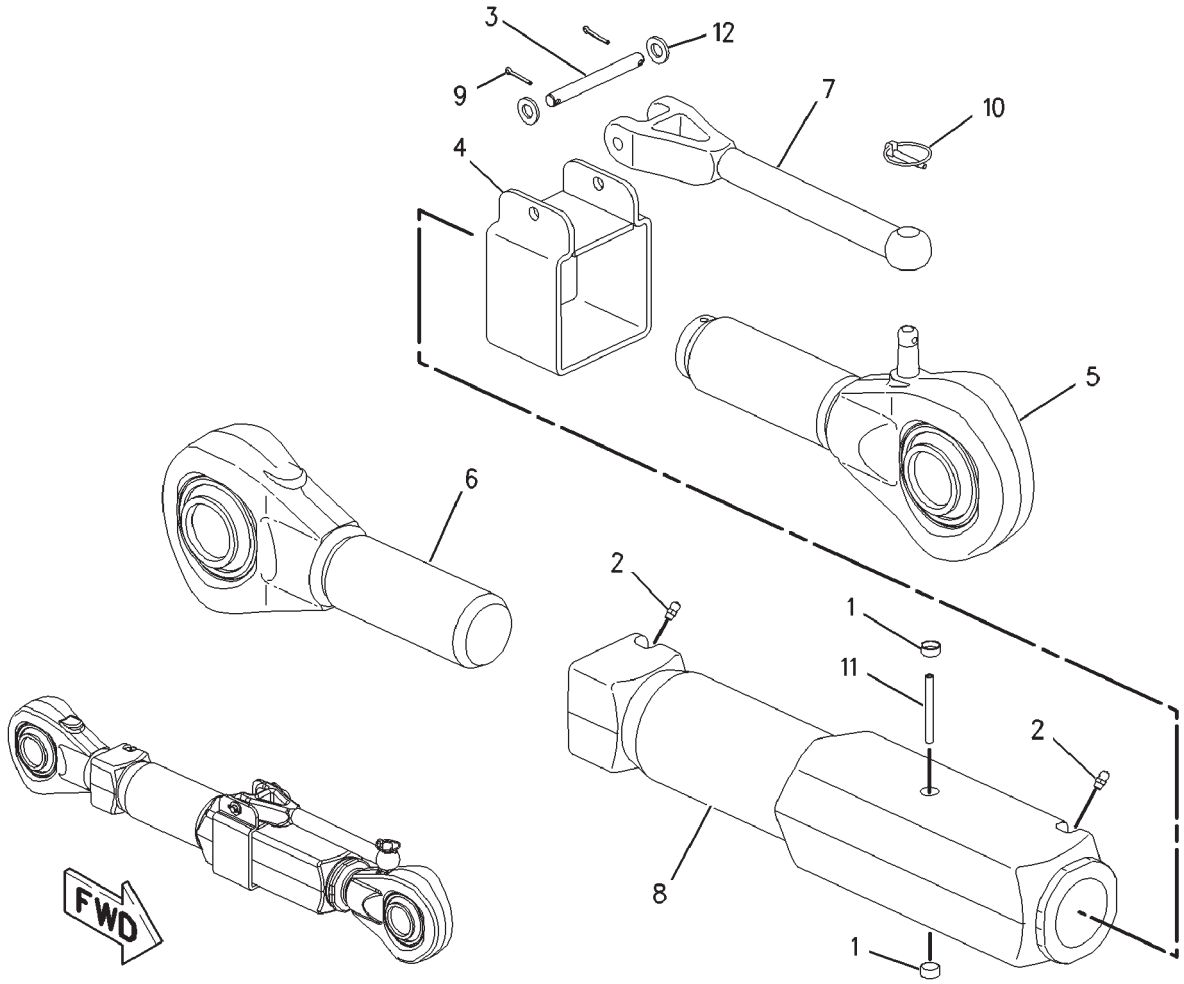

00898208

LINK GP-UPPER
186-1091

ITEM	NUMBER	QTY	DESCRIPTION
-	186-1091	--	LINK GP-UPPER [A]
1	CH0T-0200	2	PLUG-CUP
2	CH6V-1506	2	FITTING-GREASE
3	CH186-1069	1	PIN
4	CH189-3284	1	FRAME ASM
5	CH210-7531	1	ROD END ASM (LH)
6	CH210-7532	1	ROD END ASM (RH)
7	189-3296	1	HANDLE
8	210-7523	1	TUBE
9	CH095-0845	2	PIN-COTTER
10	CH5D-8159	1	PIN ASM
11	CH6V-8130	1	PIN-SPRING
12	400287X1	2	WASHER-HARD (11X21X2.5)

[A] PART OF 179-3317; 184-5065
HITCH GP-3 POINT

00898208
PR: t05i29k58b0454

MOUNTING GP-CYLINDER - 184-5035

CONTROLLED DRAWBAR

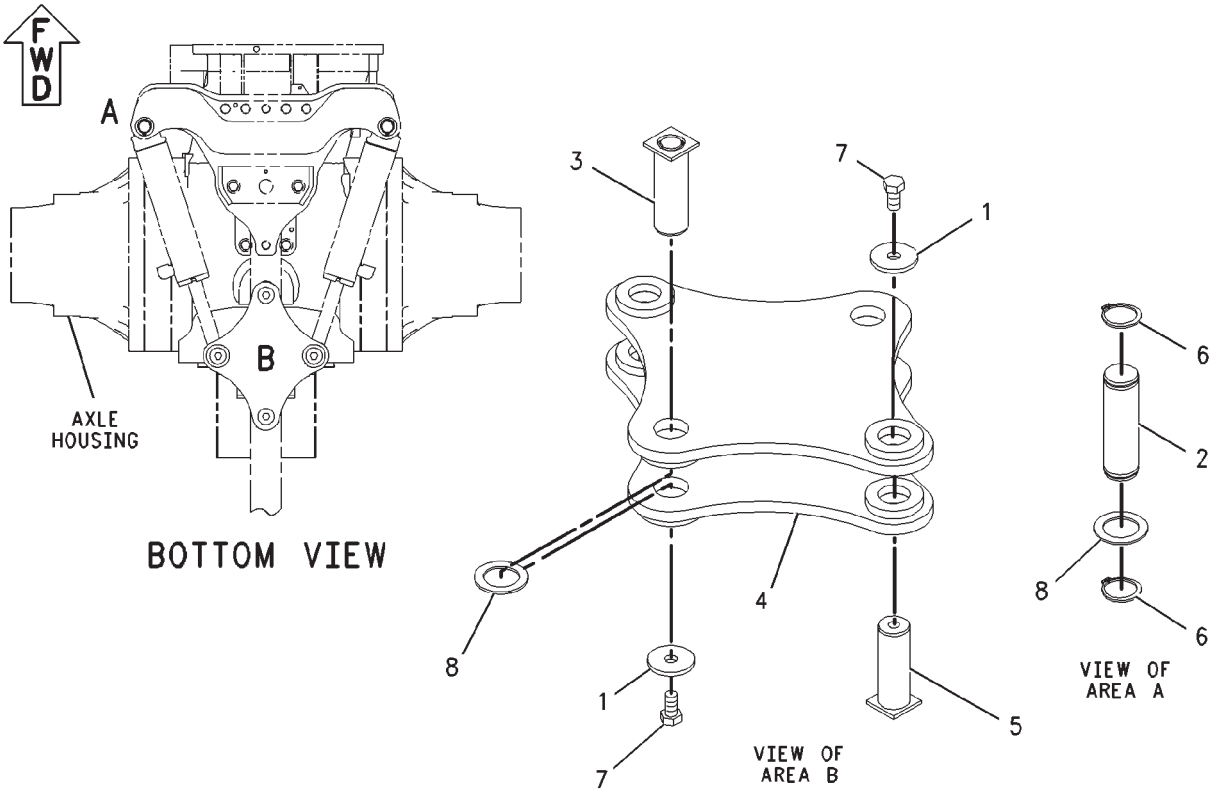

MOUNTING GP-CYLINDER - 184-5035

CONTROLLED DRAWBAR

ITEM	NUMBER	QTY	DESCRIPTION
-	184-5035	--	MOUNTING GP-CYLINDER [A] (NOT SERVICED)
1	CH7D-0734	4	WASHER (.656X2.38X.250 IN THK)
2	CH190-2611	2	PIN
3	CH190-2612	2	PIN ASM
4	190-2613	2	PLATE ASM
5	210-7491	2	PIN ASM
6	CH201-8106	4	RING-RETAINING
7	400088X1	4	BOLT (M16X2X30MM)
8	CH9R-0158	4	WASHER (46X69X3)

[A] PART OF 184-5033 & 210-7489
CONTROL AR-DRAWBAR

00888167
PR: t05i29k58b0455

PLUG GP-3 PT-HITCH - 224-9662

DRAWBAR HITCH APPLICATIONS

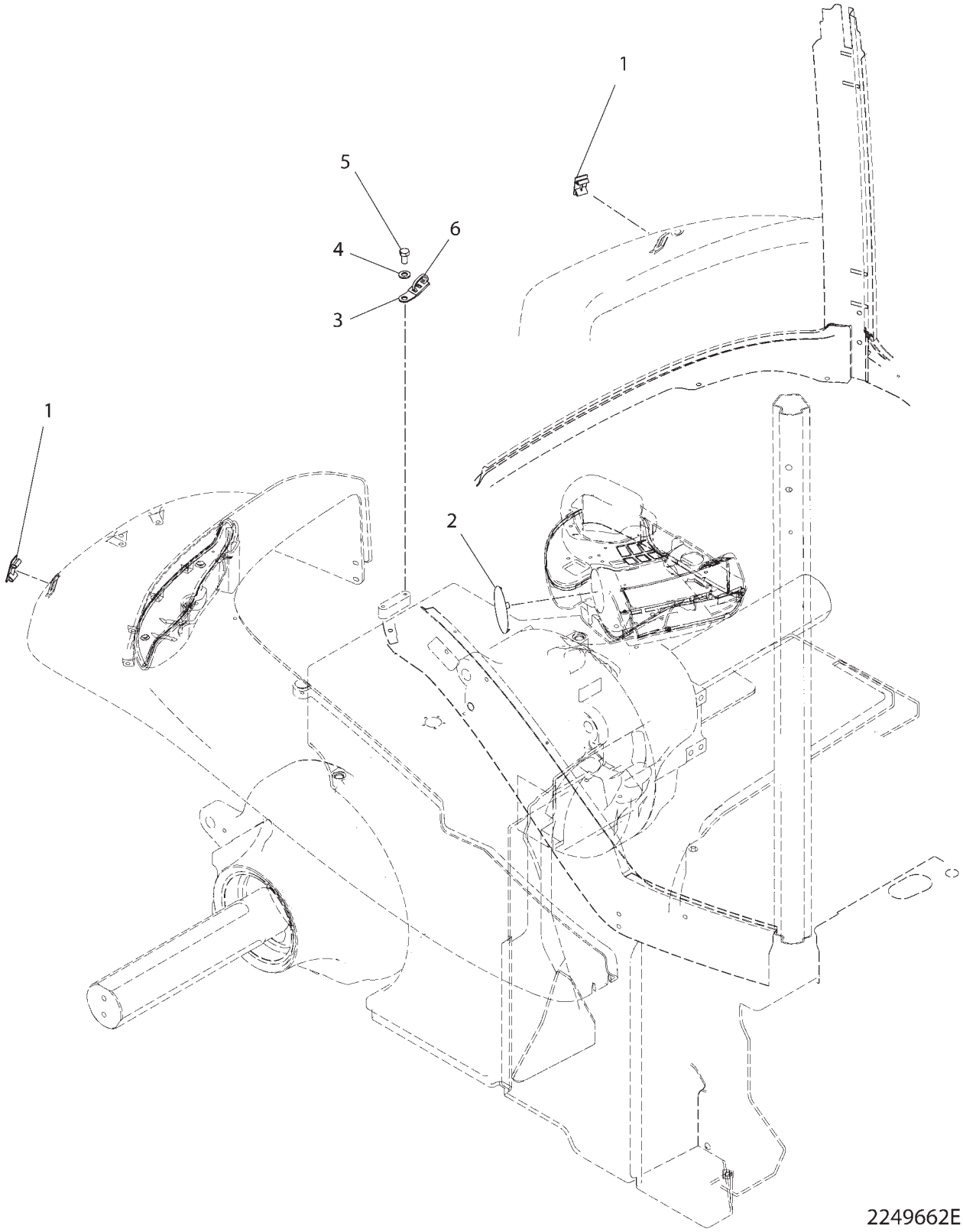

PLUG GP-3 PT-HITCH - 224-9662

DRAWBAR HITCH APPLICATIONS

ITEM	NUMBER	QTY	DESCRIPTION
-	224-9662	--	PLUG GP-3 PT HITCH [A]
1	CH109-2356	2	PLUG
2	CH214-1071	1	PLUG
3	CH4P-7581	1	CLIP
4	400287X1	1	WASHER-HARD (11IDX21ODX2.5)
5	400040X1	1	BOLT (M10X1.5X20)
6	CH7K-1181	1	STRAP-CABLE

[A] PART OF:
179-0851 HITCH AR
179-0853 HITCH AR-NON AG
184-5033 CONTROL AR-DRAWBAR

2249662E
PR: t05i29k58b0456

POWER TAKE-OFF (KIT) - 163-0400
ROW & SPECIAL APPLICATIONS

NO ILLUSTRATION

NOTIF

POWER TAKE-OFF (KIT) - 163-0400

ROW & SPECIAL APPLICATIONS

ITEM	NUMBER	QTY	DESCRIPTION
-	163-0400	--	KIT-PTO
1	152-0446	1	CONTROL GP-PTO (NOT SERVICED) (SEE BREAKDOWN FOR COMPONENTS)
2	183-4470	1	GUARD GP-PTO (NOT SERVICED) (SEE BREAKDOWN FOR COMPONENTS)
3	187-4930	1	POWER TAKE-OFF GP (NOT SERVICED) (SEE BREAKDOWN FOR COMPONENTS)
4	189-2976	1	LINES GP-PTO (NOT SERVICED) (SEE BREAKDOWN FOR COMPONENTS)

NOTIF
PR: t05i29k58b0457

POWER TAKE-OFF (KIT) - 224-8603

EAME

NO ILLUSTRATION

NOTIF

POWER TAKE-OFF (KIT) - 224-8603

EAME

ITEM	NUMBER	QTY	DESCRIPTION
-	224-8603	--	KIT-PTO
1	224-5884	1	CONTROL GP-PTO (NOT SERVICED) (SEE BREAKDOWN FOR COMPONENTS)
2	183-4470	1	GUARD GP-PTO (NOT SERVICED) (SEE BREAKDOWN FOR COMPONENTS)
3	187-4930	1	POWER TAKE-OFF GP (NOT SERVICED) (SEE BREAKDOWN FOR COMPONENTS)
4	189-2976	1	LINES GP-PTO (NOT SERVICED) (SEE BREAKDOWN FOR COMPONENTS)

NOTIF
PR: t05i29k58b0458

GUARD GP-POWER TAKE-OFF - 183-4470

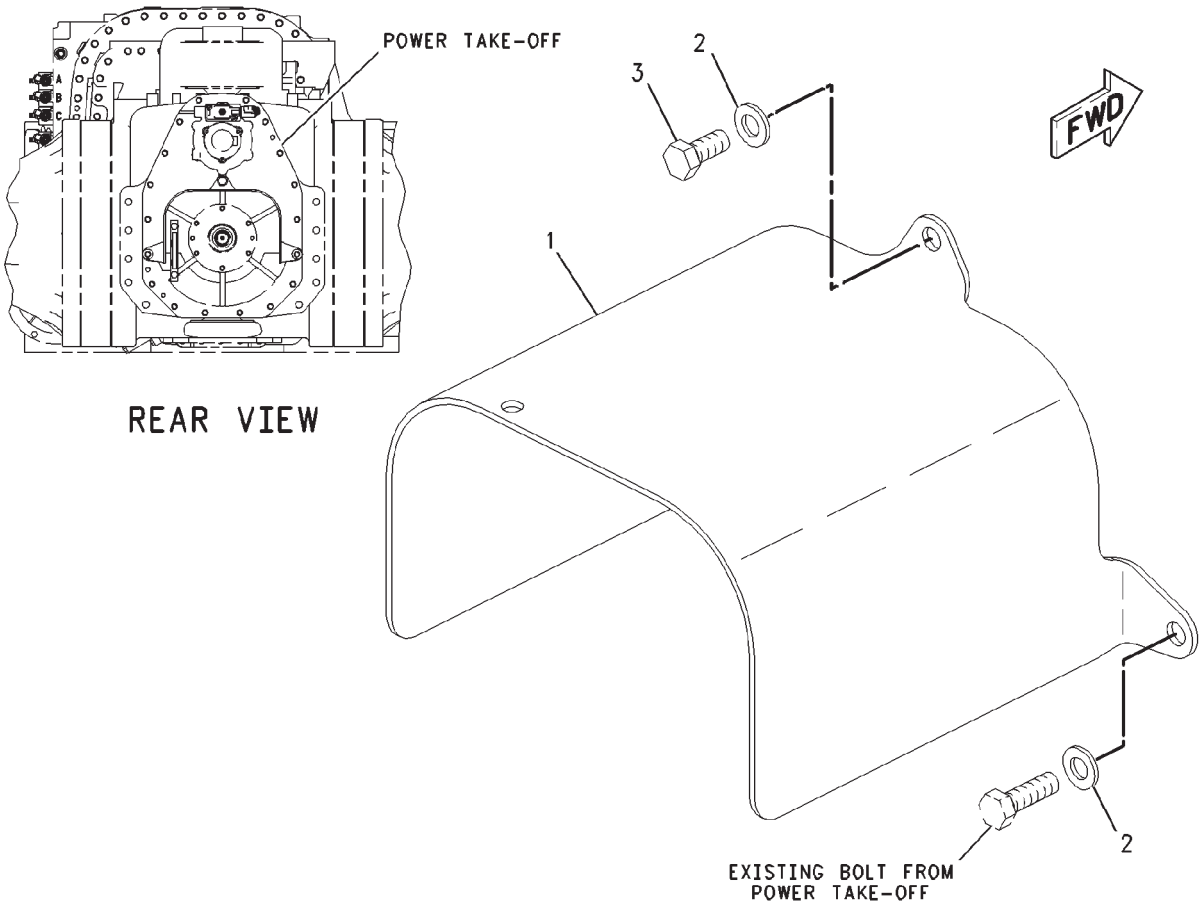

00828240

GUARD GP-POWER TAKE-OFF - 183-4470

ITEM	NUMBER	QTY	DESCRIPTION
-	183-4470	--	GUARD GP-POWER TAKE-OFF [A] (NOT SERVICED)
1	502050D1	1	PLATE
2	CH8T-4122	3	WASHER-HARD (17X32X3.5MM THK)
3	AG518357	1	BOLT (M16X2X35MM)

[A] PART OF 163-0400; 224-8603 KIT-PTO; 183-2197; 183-2198 GAUGE AR-TRACK

00828240
PR: t05i29k58b0459

ROCKSHAFT GP - 186-1063

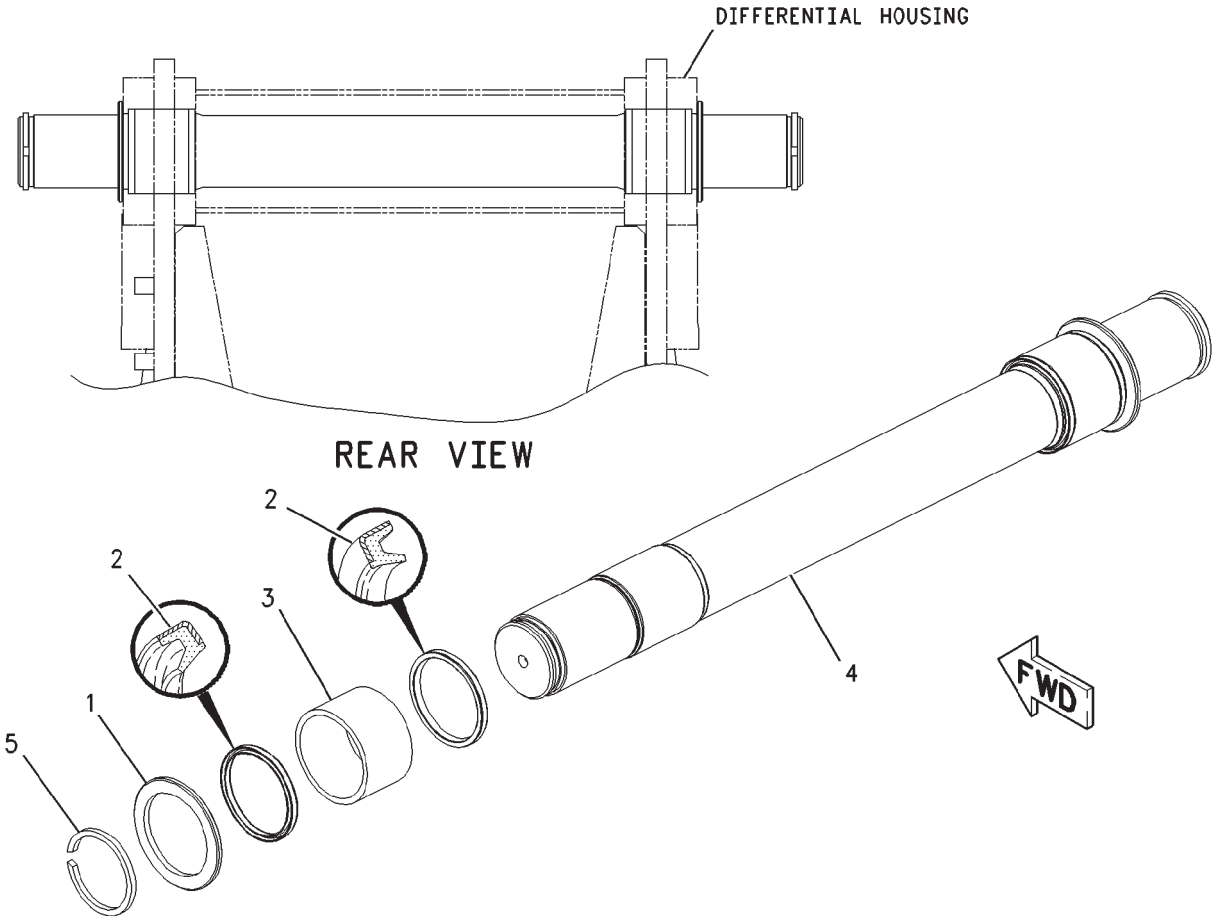

00851422

ROCKSHAFT GP - 186-1063

ITEM	NUMBER	QTY	DESCRIPTION
-	186-1063	--	ROCKSHAFT GP [A] (NOT SERVICED)
1	CH6K-9070	2	WASHER-THRUST
2	CH7K-9211	4	SEAL-LIP
3	CH170-2320	2	BEARING
4	186-1064	1	SHAFT-SPLINED
5	400097X1	2	RING-RETAINING

[A] PART OF 179-3317; 184-5065
HITCH GP-3 POINT

00851422
PR: t05i29k58b0460

SUPPORT GP-DRAWBAR - 180-4038
SCRAPER HITCH

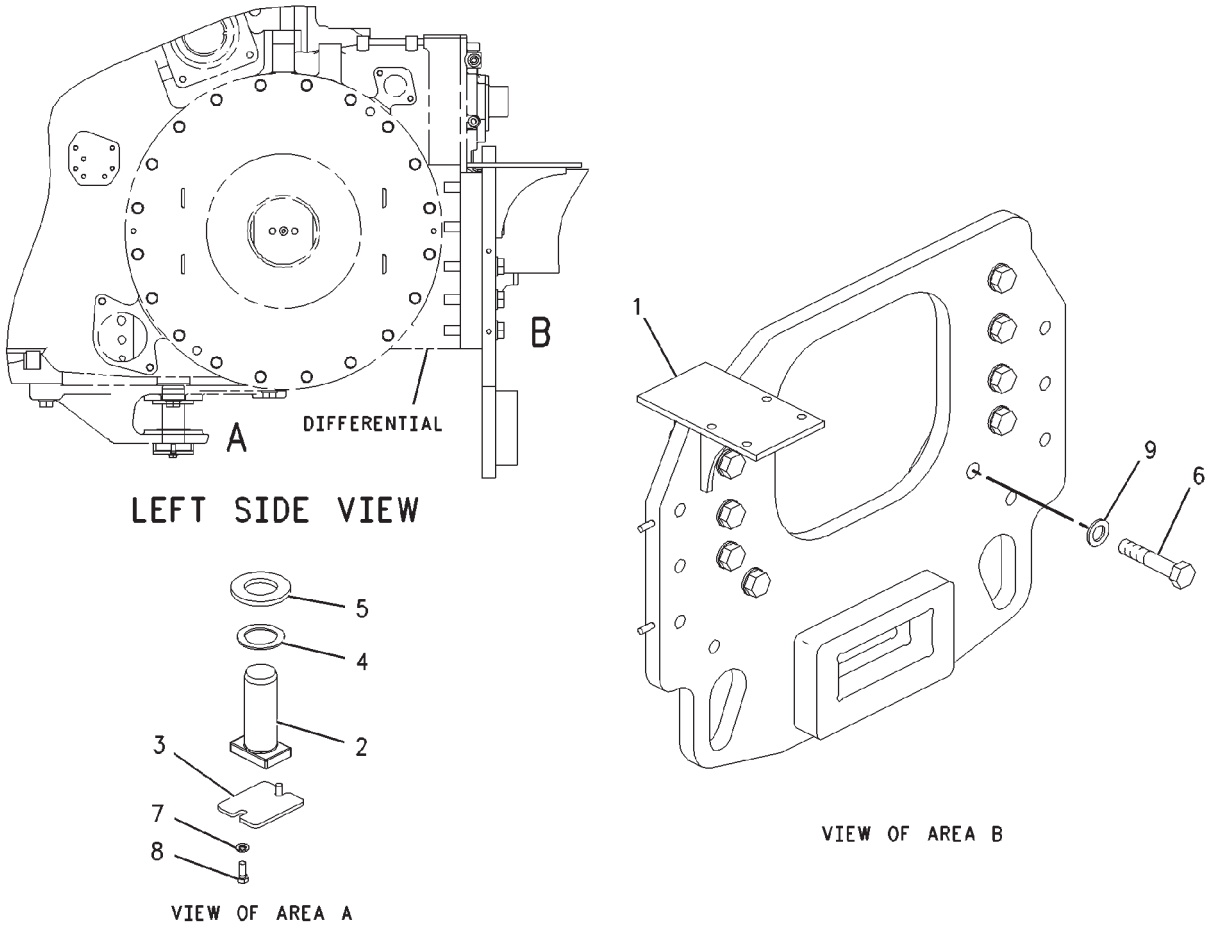

SUPPORT GP-DRAWBAR - 180-4038

SCRAPER HITCH

ITEM	NUMBER	QTY	DESCRIPTION
-	180-4038	--	SUPPORT GP-DRAWBAR [A]
1	189-3325	1	PLATE ASM
2	CH200-8751	1	PIN-DRAWBAR
3	501948D1	1	RETAINER
4	400288X1	1	WASHER-HARD (51X74X3)
5	CH7Y-0725	1	WASHER-HARD (52X92X8)
6	400213X1	10	BOLT (M24X3X120MM)
7	400287X1	2	WASHER-HARD (11X21X2.5)
8	400039X1	2	BOLT (M10X1.5X25MM)
9	400081X1	10	WASHER-HARD (26X44X4)

[A] PART OF 179-0853 HITCH AR-NON AG

00851221
PR: t05i29k58b0461

SUPPORT GP-DRAWBAR - 210-7508

ROW AND SPECIAL APPLICATIONS

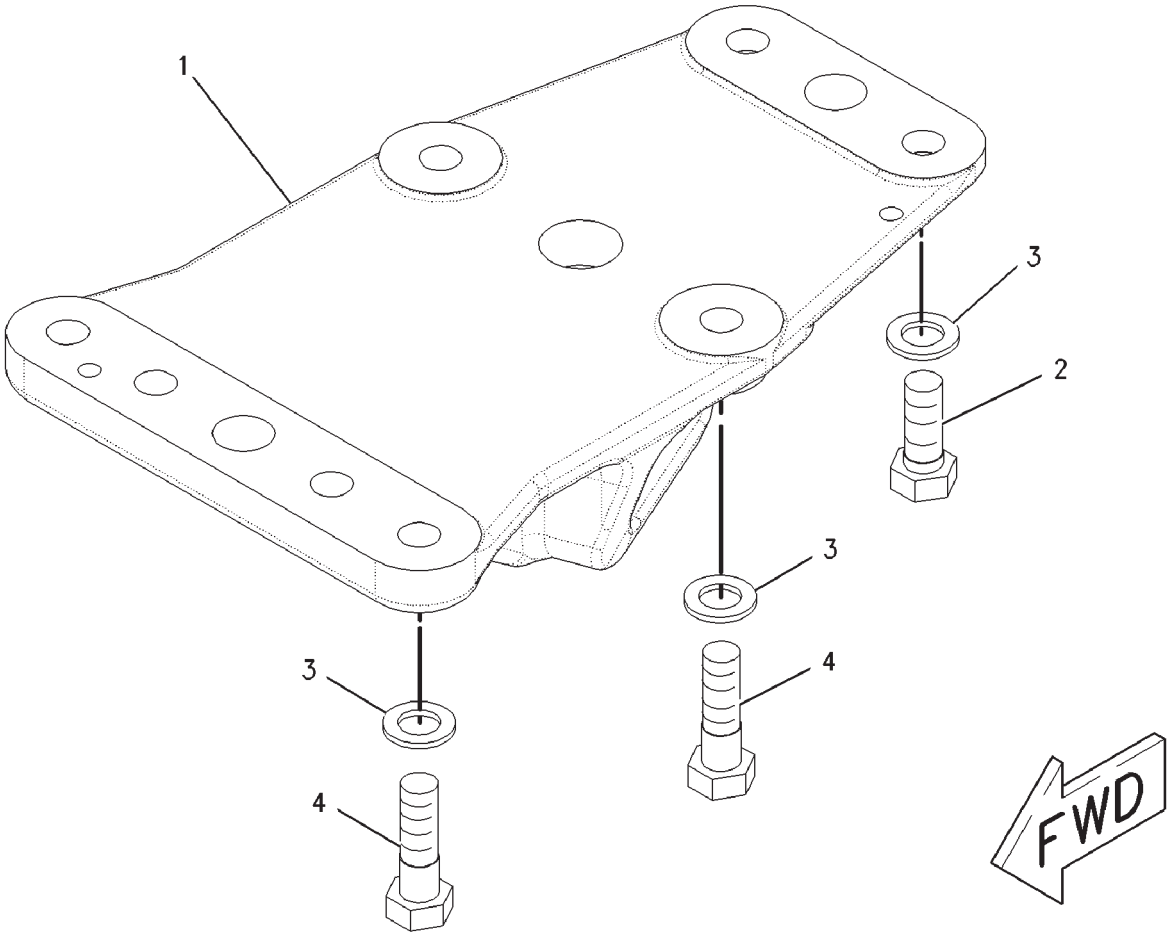

00897590

SUPPORT GP-DRAWBAR - 210-7508

ROW AND SPECIAL APPLICATIONS

ITEM	NUMBER	QTY	DESCRIPTION
-	210-7508	--	SUPPORT GP-DRAWBAR [A]
1	210-7506	1	SUPPORT
2	400035X1	2	BOLT (M24X3X60MM)
3	400081X1	8	WASHER-HARD (26X44X4)
4	400067X1	6	BOLT (M24X3X80MM)

[A] PART OF 179-0853 HITCH AR-NON AG

00897590
PR: t05i29k58b0462

SUPPORT GP-FRAME - 210-7509
CONTROLLED DRAWBAR

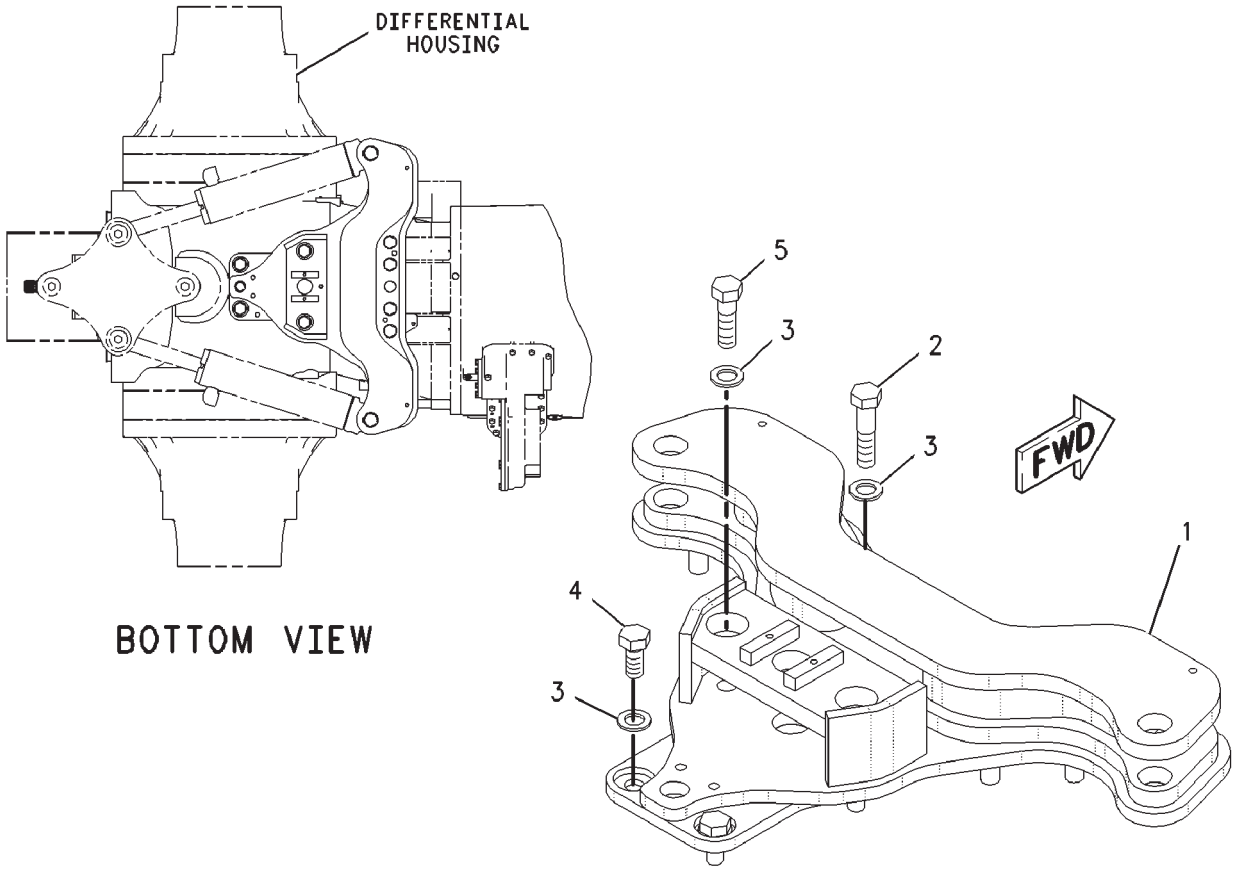

00893786

SUPPORT GP-FRAME - 210-7509
CONTROLLED DRAWBAR

ITEM	NUMBER	QTY	DESCRIPTION
-	210-7509	--	SUPPORT GP-DRAWBAR [A] (NOT SERVICED)
1	210-7503	1	PLATE ASM
2	400184X1	4	BOLT (M24X3X100MM)
3	400081X1	8	WASHER-HARD (26X44X4)
4	400232X1	2	BOLT (M24X3X50MM)
5	400067X1	2	BOLT (M24X3X80MM)

[A] PART OF 184-5033 & 210-7489
CONTROL AR-DRAWBAR

00893786
PR: t05i29k58b0463

AIR CONDITIONER & MOUNTING GP-BASIC

151-9986
(S/N: PRIOR TO BAM50633; BBP50486; BCC50765; BDS50909)

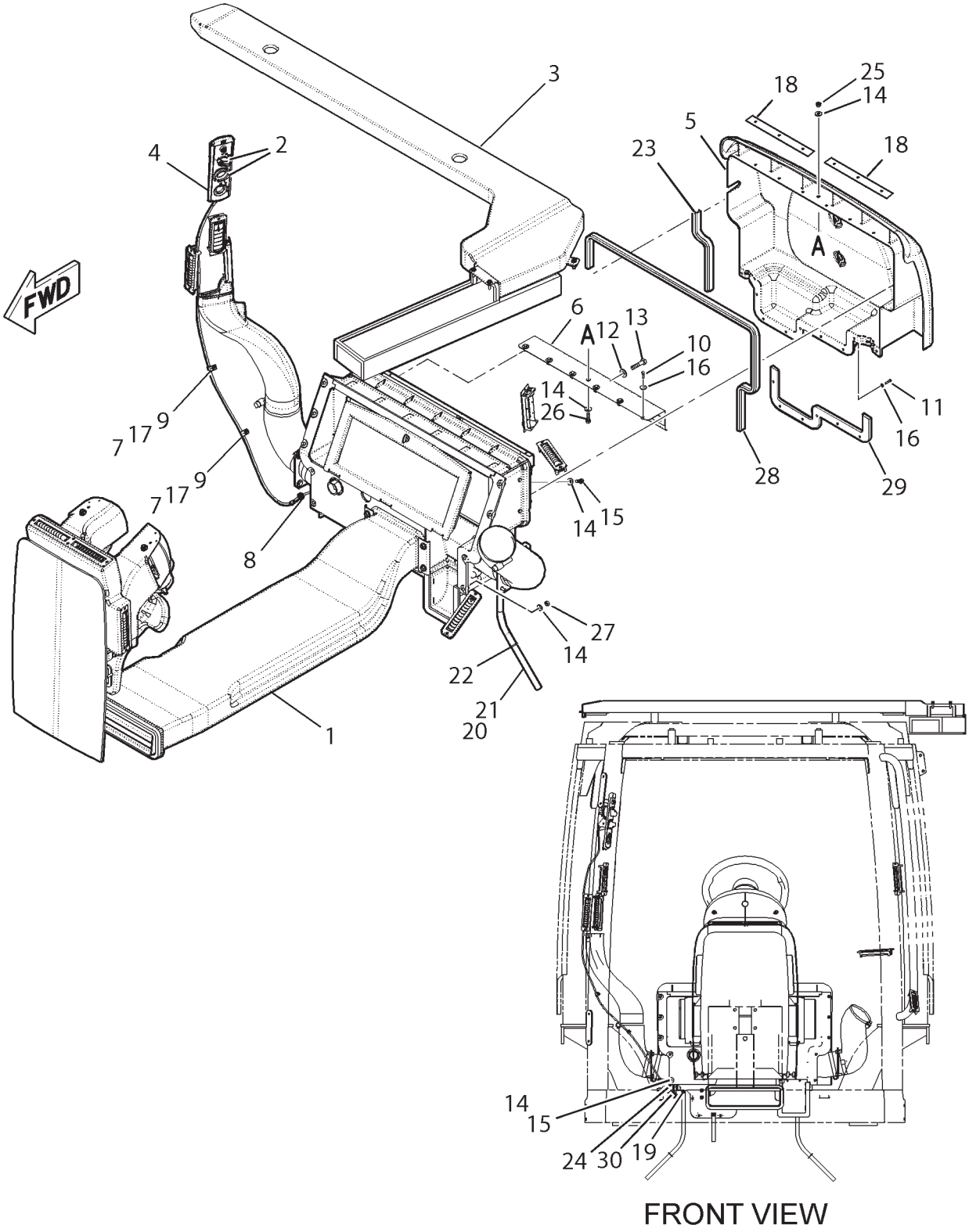

AIR CONDITIONER & MOUNTING GP-BASIC

151-9986
(S/N: PRIOR TO BAM50633; BBP50486; BCC50765; BDS50909)

ITEM	NUMBER	QTY	DESCRIPTION
-	151-9986	--	AIR CONDITIONER & MOUNTING GP [A] (NOT SERVICED)
1	152-0428	1	AIR CONDITIONER GP (S/N: PRIOR TO BAM40605;BBP40472;BCC40709;BDS40834) (NOT SERVICED) (SEE BREAKDOWN FOR COMPONENTS)
1	502500D1	1	AIR CONDITIONER GP (S/N: EFF BAM40605;BBP40472;BCC40709;BDS40834) (NOT SERVICED) (SEE BREAKDOWN FOR COMPONENTS)
2	CH216-2628	2	KNOB AS
3	166-4556	1	FILTER GP-CAB AIR (NOT SERVICED) (SEE BREAKDOWN FOR COMPONENTS)
4	166-4586	1	CONTROL GP-AIR & TEMP (NOT SERVICED) (SEE BREAKDOWN FOR COMPONENTS)
5	166-4603	1	COVER
6	174-5770	1	BRACKET ASY.
7	CH195-7925	3	CLIP
8	400948X1	1	GROMMET
9	400018X1	3	BOLT (M6X1.0X10MM)
10	400152X1	6	BOLT (M6X1X16MM)
11	400022X1	9	BOLT (M6X1.0X25MM)
12	CH7X-7729	1	WASHER (11X25X3MM THK)
13	400049X1	1	BOLT (M10X1.5X45MM)
14	400599X1	12	WASHER-HARD (M8X20.5X2MM THK)
15	400053X1	6	BOLT (M8X1.25X20MM)
16	CH5P-4115	9	WASHER-HARD (7.2X19X2MM THK)
17	CH9X-8267	3	WASHER (6.6X12X2MM THK)
18	501147D1	2	STRIP
19	CH3S-5096	3	CLAMP
20	CH7T-9793	3	VALVE (CHECK)
21	CH5P-4829	AR	TUBE (42DM)
22	400837X1	3	STRAP-CABLE
23	501144D1	1	SEAL
24	500473D1	1	CLIP
25	CH131-3540	1	LOCKNUT
26	400341X1	1	BOLT (M8X1.25X25MM)
27	400340X1	4	NUT (M8X1.25 THD)
28	501145D1	1	SEAL
29	502517D1	1	PLATE
30	CH8Y-5737	1	CLIP-COMP (4.3IDX5.1ODX4.8)

[A] PART OF 500842D1; 500844D1 CAB AR

1519986A
PR: t05i29k58b0464

AIR CONDITIONER & MOUNTING GP-BASIC

502502D1
(S/N: EFF BAM50633; BBP50486; BCC50765; BDS50909)

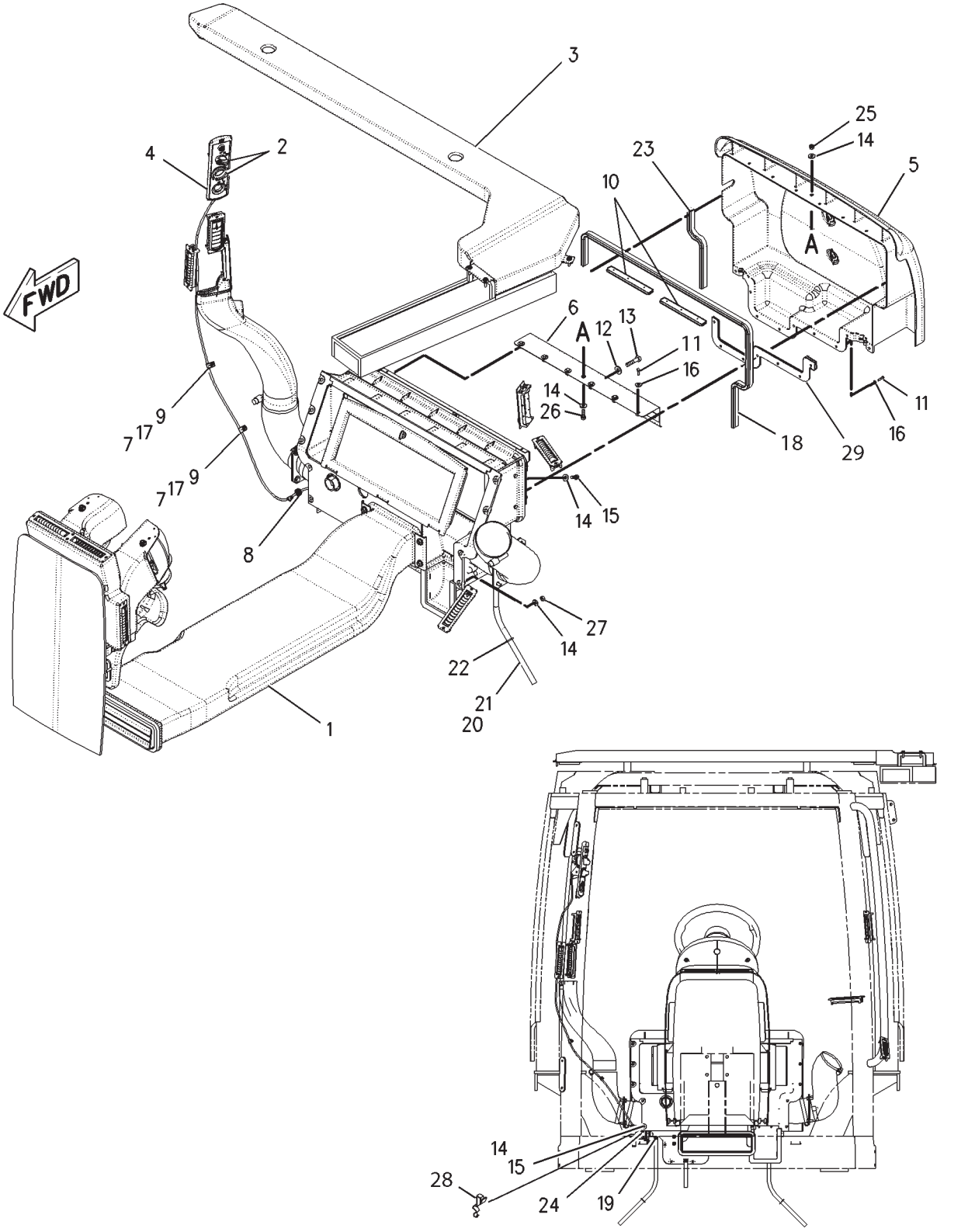

502502D1

AIR CONDITIONER & MOUNTING GP-BASIC

502502D1
(S/N: EFF BAM50633; BBP50486; BCC50765; BDS50909)

ITEM	NUMBER	QTY	DESCRIPTION
-	502502D1	--	AIR CONDITIONER & MTG GP [A] (NOT SERVICED)
1	502500D1	1	AIR CONDITIONER GP (NOT SERVICED) (SEE BREAKDOWN FOR COMPONENTS)
2	CH216-2628	2	KNOB AS (CONTROL)
3	166-4556	1	DUCT GP-CAB AIR (NOT SERVICED) (SEE BREAKDOWN FOR COMPONENTS)
4	166-4586	1	CONTROL GP-AIR & TEMPERATURE (SEE BREAKDOWN FOR COMPONENTS)
5	166-4603	1	COVER
6	174-5770	1	BRACKET AS
7	CH195-7925	3	CLIP
8	400948X1	1	GROMMET
9	400018X1	3	BOLT (M6X1.0X10MM)
10	501147D1	2	STRIP
11	400022X1	15	BOLT (M6X1.0X25MM)
12	CH7X-7729	1	WASHER (11X25X3MM THK)
13	400049X1	1	BOLT (M10X1.5X45MM)
14	400599X1	12	WASHER-HARD (8.8X20.5X2MM THK)
15	400053X1	6	BOLT (M8X1.25X20MM)
16	CH5P-4115	8	WASHER-HARD (7.2X19X2MM THK)
17	CH9X-8267	3	WASHER (6.6X12X2MM THK)
18	501145D1	1	SEAL-FOAM
19	CH3S-5096	3	CLAMP
20	CH7T-9793	3	VALVE (CHECK)
21	CH5P-4829	AR	TUBE (44.1 DM)
22	400837X1	2	STRAP-CABLE
23	501144D1	1	SEAL-FOAM
24	CH8Y-5737	1	CLIP
25	CH131-3540	1	LOCKNUT
26	400341X1	1	BOLT (M8X1.25X25MM)
27	400340X1	4	NUT (M8X1.25 THD)
28	500473D1	1	CLIP
29	502517D1	1	PLATE

[A] PART OF 500842D1; 500844D1 CAB AR

502502DE
PR: t05i29k58b0465

AIR CONDITIONER & MOUNTING GP-DELUXE

166-4592
(S/N: PRIOR TO BAM50619; BBP50482; BCC50756; BDS50902)

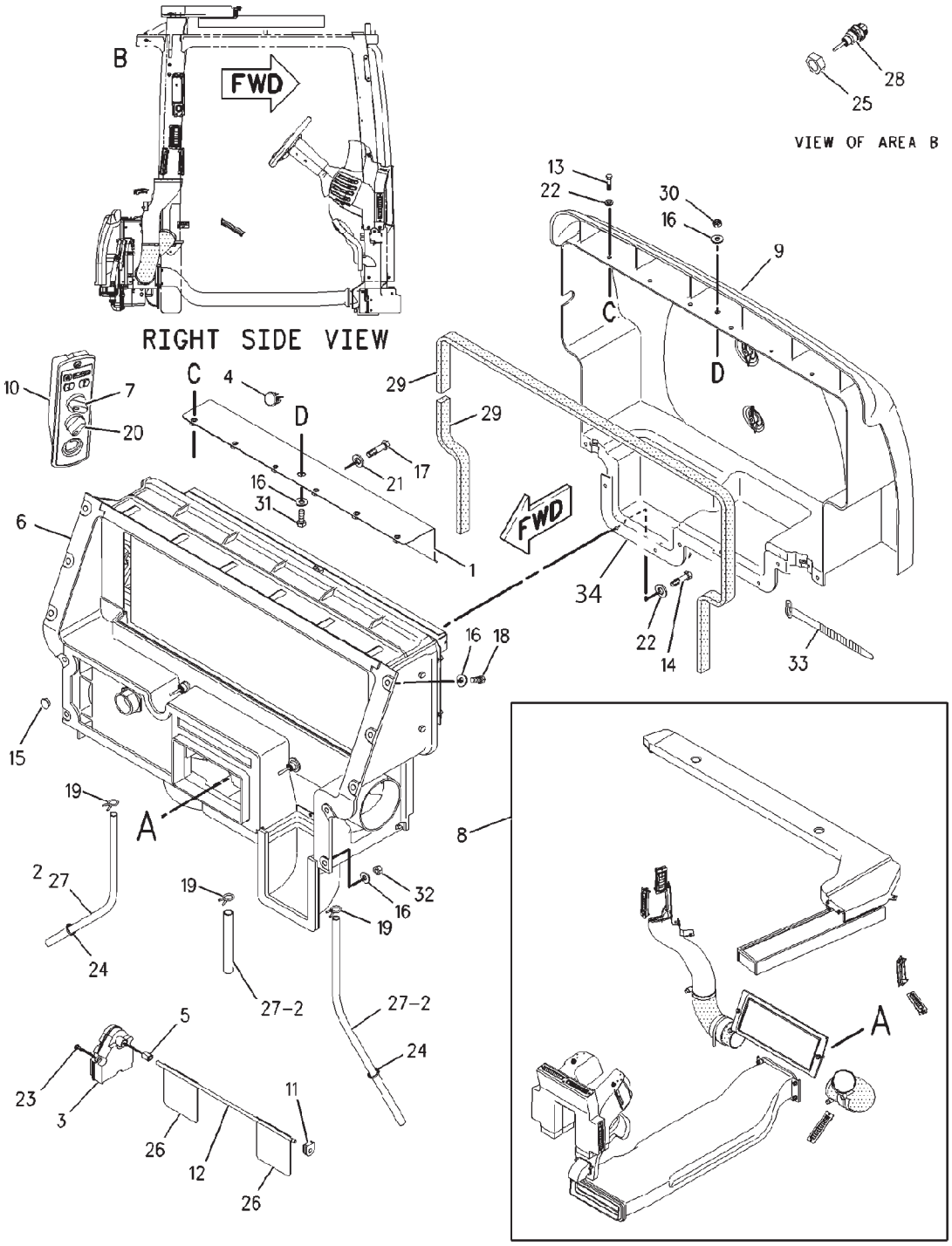

00891734

AIR CONDITIONER & MOUNTING GP-DELUXE

166-4592
(S/N: PRIOR TO BAM50619; BBP50482; BCC50756; BDS50902)

ITEM	NUMBER	QTY	DESCRIPTION
-	166-4592	--	AIR CONDITIONER & MOUNTING GP [A] (NOT SERVICED)
1	174-5770	1	BRACKET AS
2	CH7T-9793	3	VALVE (CHECK) (A/C DRAIN)
3	501745D1	1	ACTUATOR
4	CH128-2162	1	SENSOR GP-LIGHT (SUN LOAD)
5	CH131-3093	1	BUSHING
6	152-0427	1	AIR CONDITIONER GP (S/N: PRIOR TO BAM40575;BBP40461;BCC40683;BDS40763) (NOT SERVICED) (SEE BREAKDOWN FOR COMPONENTS)
6	502499D1	1	AIR CONDITIONER GP (S/N: EFF BAM40575; BBP40461;BCC40683;BDS40763) (NOT SERVICED) (SEE BREAKDOWN FOR COMPONENTS)
7	CH216-2628	2	KNOB AS
8	166-4556	1	FILTER GP-CAB AIR (NOT SERVICED) (SEE BREAKDOWN FOR COMPONENTS)
9	166-4603	1	COVER
10	166-4587	1	CONTROL GP-AIR & TEMP (S/N: PRIOR TO BAM40608;BBP40474;BCC40730;BDS40873)
10	501740D1	1	CONTROL GP-AIR & TEMP (S/N: EFF BAM40608;BBP40474;BCC40730;BDS40873)
11	CH192-4765	1	BUSHING
12	198-4070	1	DOOR ASY.
13	400152X1	6	BOLT (M6X1X16MM)
14	400022X1	9	BOLT (M6X1.0X25MM)
15	CH6K-6361	1	BUTTON-PLUG
16	400599X1	12	WASHER-HARD (8.8X20.5X2MM THK)
17	400049X1	1	BOLT (M10X1.5X45MM)
18	400053X1	6	BOLT (M8X1.25X20MM)
19	CH3S-5096	3	CLAMP
20	501144D1	1	SEAL-FOAM
21	CH7X-7729	1	WASHER (11X25X3MM THK)
22	CH5P-4115	8	WASHER-HARD (7.2X19X2MM THK)
23	CH9X-1046	3	SCREW (M4X0.7X18MM)
24	400837X1	3	STRAP-CABLE
25	CH107-5591	1	NUT-JAM (3/4-16 THD)
26	CH3E-6600	AR	SEAL (BULK) (16CM)
27	CH5P-4829	AR	TUBE (42DM)
28	501697D1	1	SENDER GP-TEMPERATURE (OUTSIDE AIR)
29	501145D1	1	SEAL-FOAM
30	CH131-3540	1	LOCKNUT
31	400341X1	1	BOLT (M8X1.25X25MM)
32	400340X1	4	NUT (M8X1.25 THD)
33	501147D1	2	STRIP
34	502517D1	1	PLATE

[A] PART OF 500841D1;500843D1;500849D1
CAB AR

00891734
PR: t05i29k58b0466

AIR CONDITIONER & MOUNTING GP-DELUXE

502501D1
(S/N: EFF BAM50619;BBP50482;
BCC50756;BDS50902)

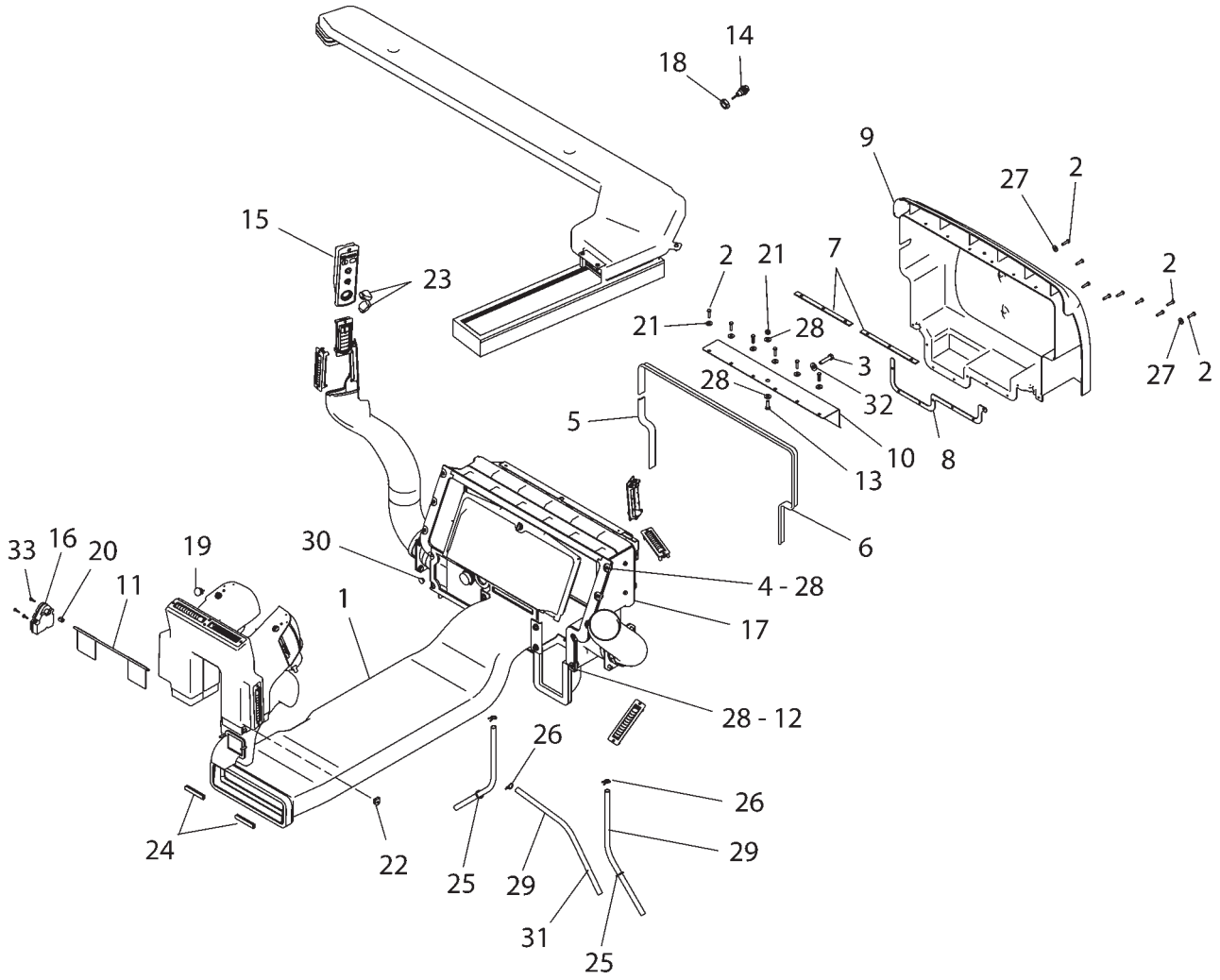

502501DD

AIR CONDITIONER & MOUNTING GP-DELUXE

502501D1
(S/N: EFF BAM50619;BBP50482;
BCC50756;BDS50902)

ITEM	NUMBER	QTY	DESCRIPTION
-	502501D1	--	AIR CONDITIONER & MOUNTING GP [A] (NOT SERVICED)
1	166-4556	1	DUCT GP-CAB AIR (NOT SERVICED) (SEE BREAKDOWN FOR COMPONENTS)
2	400022X1	15	BOLT (M6X1.0X25MM)
3	400049X1	1	BOLT (M10X1.5X45MM)
4	400053X1	6	BOLT (M8X1.25X20MM)
5	501144D1	1	SEAL-FOAM
6	501145D1	1	SEAL-FOAM
7	501147D1	2	STRIP
8	502517D1	1	PLATE
9	166-4603	1	COVER
10	174-5770	1	BRACKET AS
11	198-4070	1	DOOR AS
12	400340X1	4	NUT (M8X1.25)
13	400341X1	1	BOLT (M8X1.25X25MM)
14	501697D1	1	SENSOR
15	501740D1	1	CONTROL GP-AIR & TEMPERATURE
16	501745D1	1	ACTUATOR
17	502499D1	1	AIR CONDITIONER GP (NOT SERVICED) (SEE BREAKDOWN FOR COMPONENTS)
18	CH107-5591	1	LOCKNUT (3/4-16)
19	CH128-2162	1	SENSOR GP-LIGHT (SUN LOAD)
20	CH131-3093	1	BUSHING
21	CH131-3540	1	LOCKNUT (M8X1.25)
22	CH192-4765	1	BUSHING
23	CH216-2628	2	KNOB AS-CONTROL
24	CH3E-6600	AR	SEAL (BULK) (16CM)
25	400837X1	2	STRAP-CABLE
26	CH3S-5096	3	CLAMP
27	CH5P-4115	8	WASHER-HARD (7.2X19X2)
28	400599X1	12	WASHER-HARD (8.8X20.5X2)
29	CH5P-6129	AR	TUBE (BULK) (44.1DM)
30	CH6K-6361	1	BUTTON-PLUG
31	CH7T-9793	3	VALVE (CHECK)
32	CH7X-7729	1	WASHER (11X25X3)
33	CH9X-1046	3	SCREW (M4X0.7X18MM)

[A] PART OF 500841D1;500843D1;500849D1
CAB AR

502501DD
PR: t05i29k58b0467

AIR CONDITIONER GP-BASIC - 152-0428

(S/N: PRIOR TO BAM40605; BBP40472; BCC40709; BDS40834)
1 OF 3

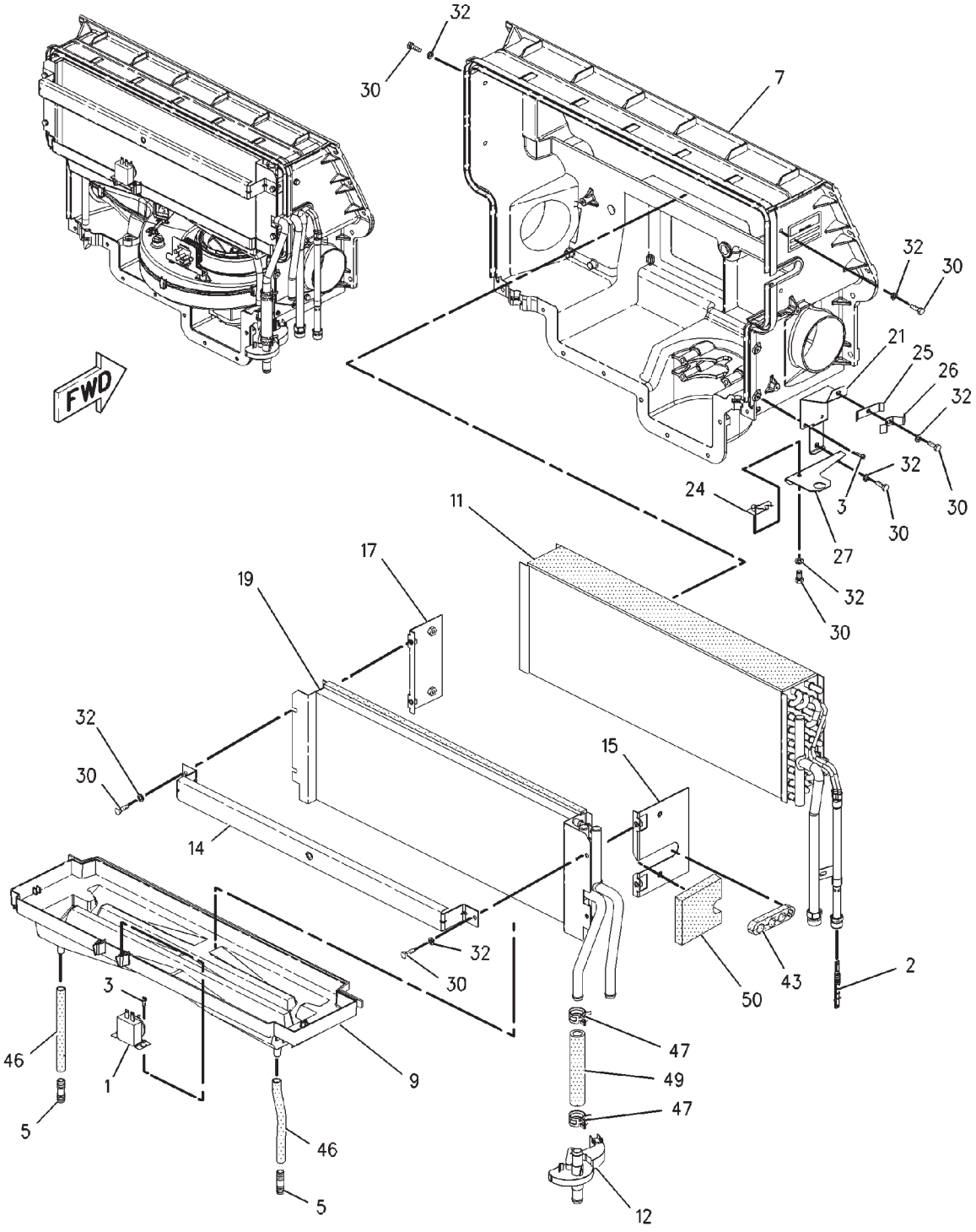

00898876

AIR CONDITIONER GP-BASIC - 152-0428

(S/N: PRIOR TO BAM40605; BBP40472; BCC40709; BDS40834)

ITEM	NUMBER	QTY	DESCRIPTION
-	152-0428	--	AIR CONDITIONER GP [A] (NOT SERVICED)
1	3E-5464	1	SWITCH ASY-THERMOSTAT (AIR CONDITIONER)
2	7X-2049	1	TUBE ASY-REFRIGERANT ORIFICE
3	8L-9381	12	SCREW-TAPPING (8-32X0.50 IN)
5	9X-4994	2	CONNECTOR
7	168-2311	1	CASE ASY.
9	168-2318	1	PAN-DRAIN
11	168-2324	1	COIL ASY-EVAPORATOR
12	168-2326	1	VALVE ASY-WATER (CAB HEATER)
14	174-3978	1	BRACKET
15	174-3979	1	RETAINER
17	174-3981	1	RETAINER
19	193-0238	1	COIL ASY-HEATER
21	206-7461	1	BRACKET ASY.
24	217-3441	1	BRACKET ASY.
25	217-3442	1	BRACKET
26	217-3443	1	BRACKET
27	217-3444	1	ANGLE
30	8T-4138	14	BOLT (M6X1X20MM)
32	9X-8256	23	WASHER (6.6X12X2MM THK)
43	180-2470	1	GASKET
46	207-1293	AR	TUBE (4DM)
47	9X-2488	2	CLAMP-HOSE
49	136-1953	AR	HOSE (13 CM)
50	223-4941	1	GASKET

[A] PART OF 151-9986 AIR CONDITIONER AND MOUNTING GP

00898876
PR: t05i29k58b0468

AIR CONDITIONER GP-BASIC - 152-0428

(S/N: PRIOR TO BAM40605; BBP40472; BCC40709; BDS40834)
2 OF 3

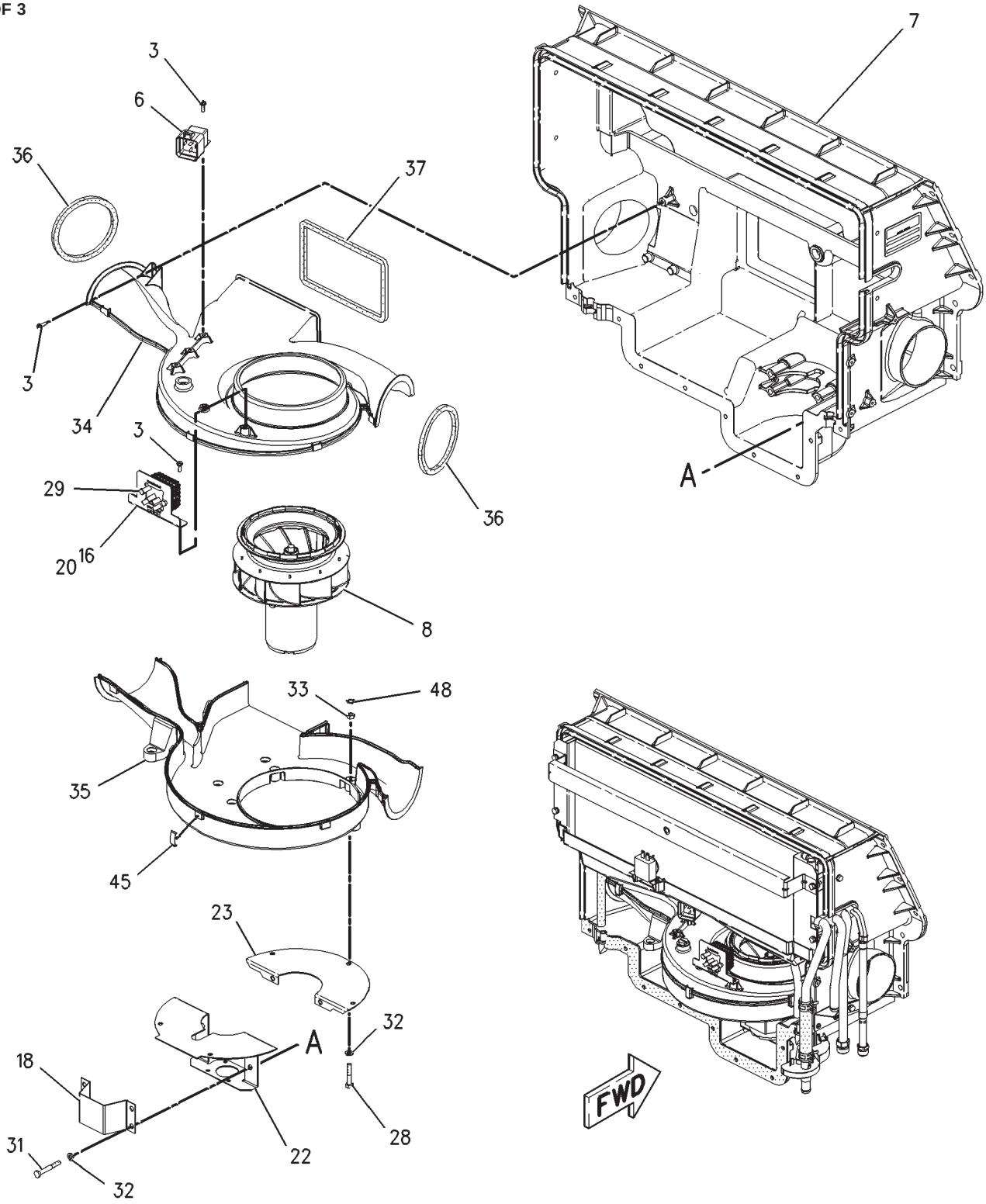

00874740

AIR CONDITIONER GP-BASIC - 152-0428

(S/N: PRIOR TO BAM40605; BBP40472; BCC40709; BDS40834)

ITEM	NUMBER	QTY	DESCRIPTION
-	152-0428	--	AIR CONDITIONER GP [A] (NOT SERVICED)
3	8L-9381	12	SCREW-TAPPING (8-32X0.50 IN)
6	115-1615	1	RELAY ASY. (12 VOLT) (CAB BLOWER FAN)
7	168-2311	1	CASE ASY.
8	168-2313	1	FAN ASY. (CAB BLOWER)
	7T-0093	2	PIN-CONNECTOR
16	174-3980	1	BRACKET ASY.
18			NOT USED
20	193-4445	1	RESISTOR
22	206-7462	1	BRACKET
23	206-7463	1	BRACKET ASY.
28	6V-7357	5	BOLT (M6X1.0X25MM)
29	7I-2272	2	BOLT (M5X0.8X12MM)
31	9X-2480	4	BOLT (M6X1.0X45MM)
32	9X-8256	23	WASHER (6.6X12X2MM THK)
33	400300X1	9	NUT (M6X1 THD)
34	168-2315	1	HOUSING-BLOWER
35	168-2316	1	HOUSING-BLOWER
36	180-2463	2	GASKET
37	180-2464	1	GASKET
45	185-4015	10	CLIP
48	7H-3937	9	LOCKWASHER

[A] PART OF 151-9986 AIR CONDITIONER AND MOUNTING GP

AIR CONDITIONER GP-BASIC - 152-0428

(S/N: PRIOR TO BAM40605; BBP40472; BCC40709; BDS40834)
3 OF 3

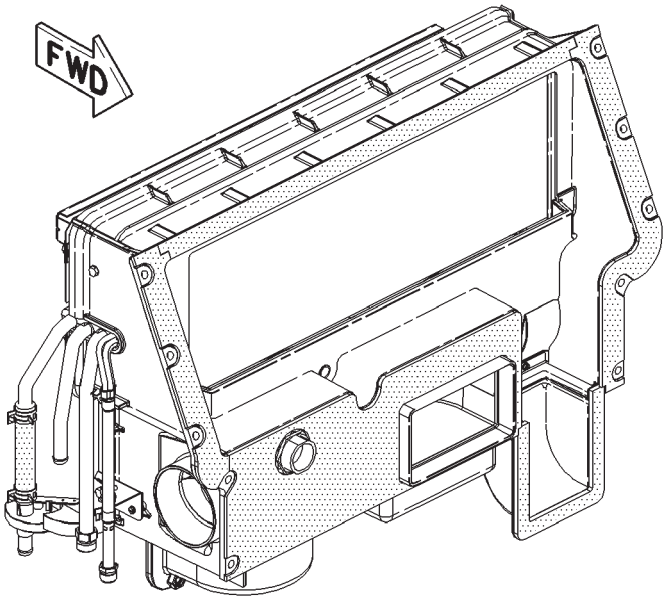

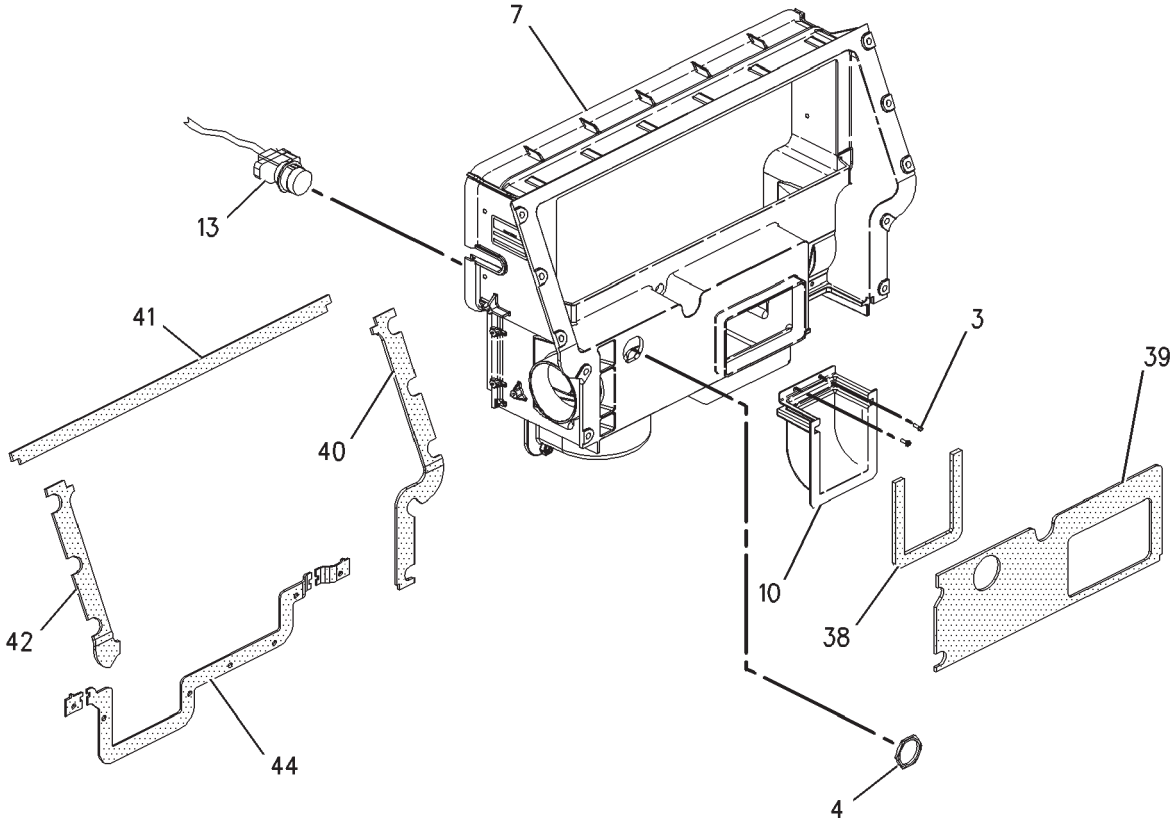

00874741

AIR CONDITIONER GP-BASIC - 152-0428

(S/N: PRIOR TO BAM40605; BBP40472; BCC40709; BDS40834)

ITEM	NUMBER	QTY	DESCRIPTION
-	152-0428	--	AIR CONDITIONER GP [A] (NOT SERVICED)
3	8L-9381	12	SCREW-TAPPING (8-32X0.50 IN)
4	8N-1536	1	NUT (1 5/8-18 THD)
7	168-2311	1	CASE ASY.
10	501706D1	1	DUCT - FRESH AIR
13	168-2327	1	HARNESS ASY. (HEATER/AC)
38	180-2465	1	GASKET
39	180-2466	1	GASKET
40	180-2467	1	GASKET
41	180-2468	1	GASKET
42	180-2469	1	GASKET
44	180-2471	1	GASKET

[A] PART OF 151-9986 AIR CONDITIONER AND MOUNTING GP

00874741
PR: t05i29k58b0470

CONDITIONER GP-AIR-BASIC - 502500D1

(S/N: PRIOR TO BAM40605; BBP40472; BCC40709; BDS40834)

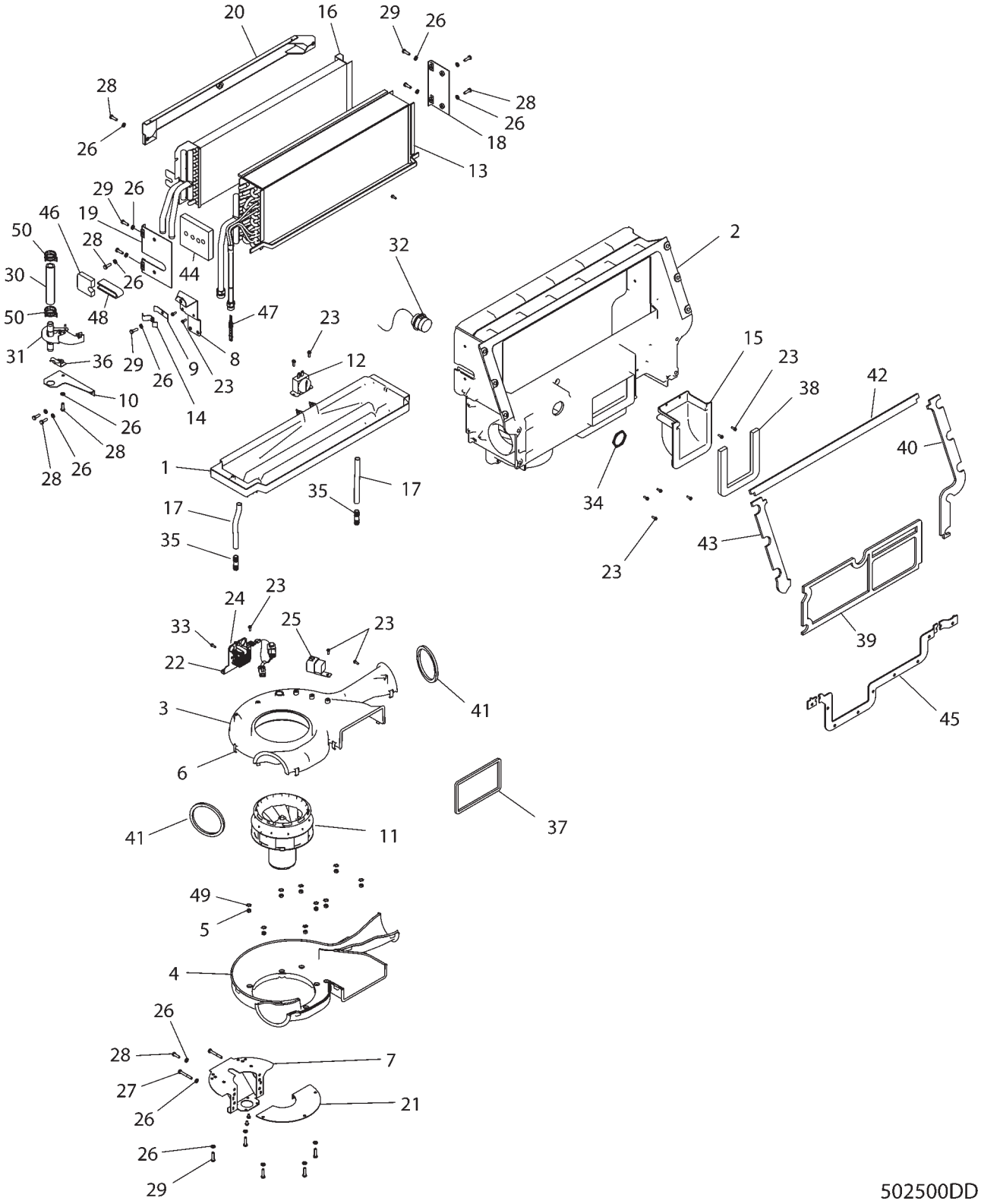

CONDITIONER GP-AIR-BASIC - 502500D1

(S/N: PRIOR TO BAM40605; BBP40472; BCC40709; BDS40834)

ITEM	NUMBER	QTY	DESCRIPTION
-	502500D1	--	CONDITIONER GP-AIR [A] (NOT SERVICED)
1	501705D1	1	PAN-DRAIN
2	501701D2	1	CASE AS
3	501703D1	1	HOUSING-BLOWER
4	501704D1	1	HOUSING-BLOWER
5	400300X1	9	NUT M6X1
6	400296X1	10	CLIP
7	501730D1	1	BRACKET AS.
8	501729D1	1	BRACKET AS.
9	501733D1	1	BRACKET
10	501735D1	1	ANGLE
11	501702D1	1	FAN AS.
12	400299X1	1	SWITCH AS.-THERMOSTAT
13	501709D1	1	COIL AS.-EVAP
14	501734D1	1	BRACKET
15	501706D1	1	DUCT-FRESH AIR
16	501727D1	1	COIL AS.-HEATER
17	400298X1	AR	TUBE-BULK (4 DM)
18	501716D1	1	RETAINER
19	501714D1	1	RETAINER
20	501713D1	1	BRACKET AS.
21	501731D1	1	BRACKET AS.
22	502267D1	1	THERMISTOR KIT
23	400305X1	22	SCREW-SELF TAPPING
24	501728D1	1	RESISTOR
25	400292X1	1	RELAY AS.
26	400310X1	23	WASHER
27	400307X1	4	BOLT M6X1X45
28	400221X1	14	BOLT-M6X1X20MM ZNDI HHD 10.9
29	400022X1	5	BOLT-M6X1X25MM ZNDI HHD 10.9
30	400294X1	AR	HOSE-BULK (13 CM)
31	501710D1	1	VALVE AS.-WATER
32	501711D2	1	HARNESS AS
33	400302X1	2	BOLT-HEX HEAD
34	400306X1	1	NUT-PANEL
35	400309X1	2	CONNECTOR
36	501732D1	1	BRACKET AS.
37	501719D1	1	GASKET
38	501720D2	1	GASKET
39	501721D2	1	GASKET
40	501722D2	1	GASKET
41	501718D1	2	GASKET
42	501723D2	1	GASKET
43	501724D2	1	GASKET
44	501725D1	1	GASKET
45	501726D1	1	GASKET
46	501737D1	1	GASKET
47	400932X1	1	ORIFICE AS.-A/C
48	502528D1	1	TAPE-REFRIGERANT
49	400301X1	9	WASHER-TOOTH
50	400308X1	2	CLAMP-HOSE

[A] PART OF: 502502D1 A/C & MTG GP

502500DD
PR: t05i29k58b0471

AIR CONDITIONER GP-DELUXE - 152-0427

(S/N: PRIOR TO BAM40575;BBP40461; BCC40683;BDS40763)

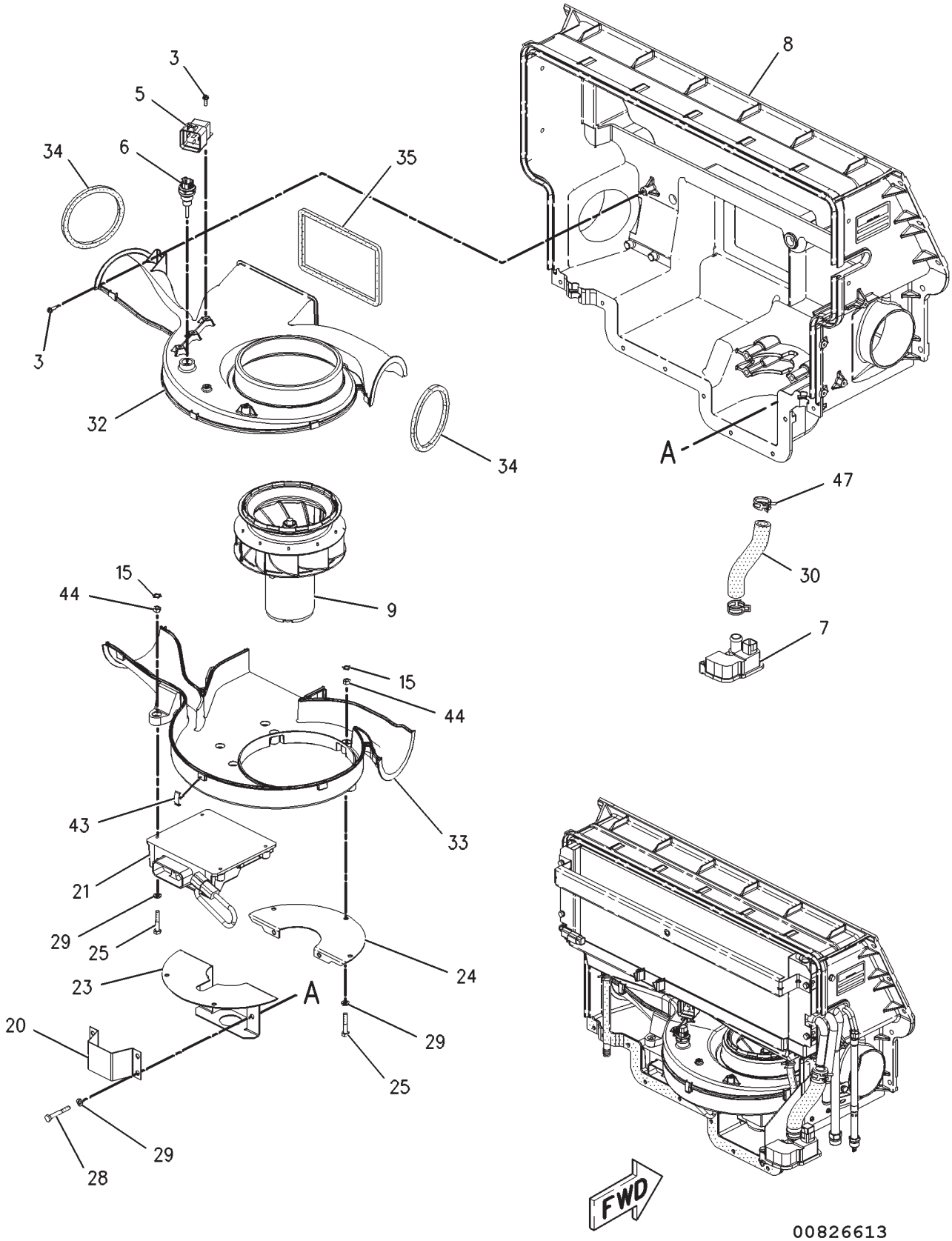

AIR CONDITIONER GP-DELUXE - 152-0427

(S/N: PRIOR TO BAM40575;BBP40461; BCC40683;BDS40763)

ITEM	NUMBER	QTY	DESCRIPTION
-	152-0427	--	AIR CONDITIONER GP [A] (NOT SERVICED)
3	8L-9381	7	SCREW-TAPPING (8-32X0.50 IN)
5	115-1615	1	RELAY ASY. (12 VOLT)
6	130-9811	2	SENSOR GP-TEMPERATURE
7	156-5863	1	VALVE AS-WATER
8	168-2311	1	CASE ASY.
9	168-2313	1	FAN ASY.
	7T-0093	2	PIN-CONNECTOR (ONE MALE PIN)
	177-9645	1	KIT-RECEPTACLE (2 PIN)(INCL. FOLLOWING)
	177-9641	1	RECEPTACLE ASY.
	177-9642	1	WEDGE
15	7H-3937	9	LOCKWASHER
20	180-2455	1	BRACKET
21	180-2461	1	CONTROL ASY.
23	206-7462		BRACKET
24	206-7463	1	BRACKET ASY.
25	6V-7357	5	BOLT (M6X1.0X25MM)
28	9X-2480	4	BOLT (M6X1.0X45MM)
29	9X-8256	28	WASHER (6.6X12X2MM THK)
30	5P-0765	AR	HOSE (20CM)
32	168-2315	1	HOUSING-BLOWER
33	168-2316	1	HOUSING-BLOWER
34	180-2463	2	GASKET
35	180-2464	1	GASKET
43	185-4015	10	CLIP
44	400300X1	11	NUT (M6X1 THD)
47	9X-2488	4	CLAMP-HOSE

[A] PART OF 166-4592 AIR CONDITIONER AND MOUNTING GP

00826613
PR: t05i29k58b0472

AIR CONDITIONER GP-DELUXE - 152-0427

(S/N: PRIOR TO BAM40575;BBP40461; BCC40683;BDS40763)

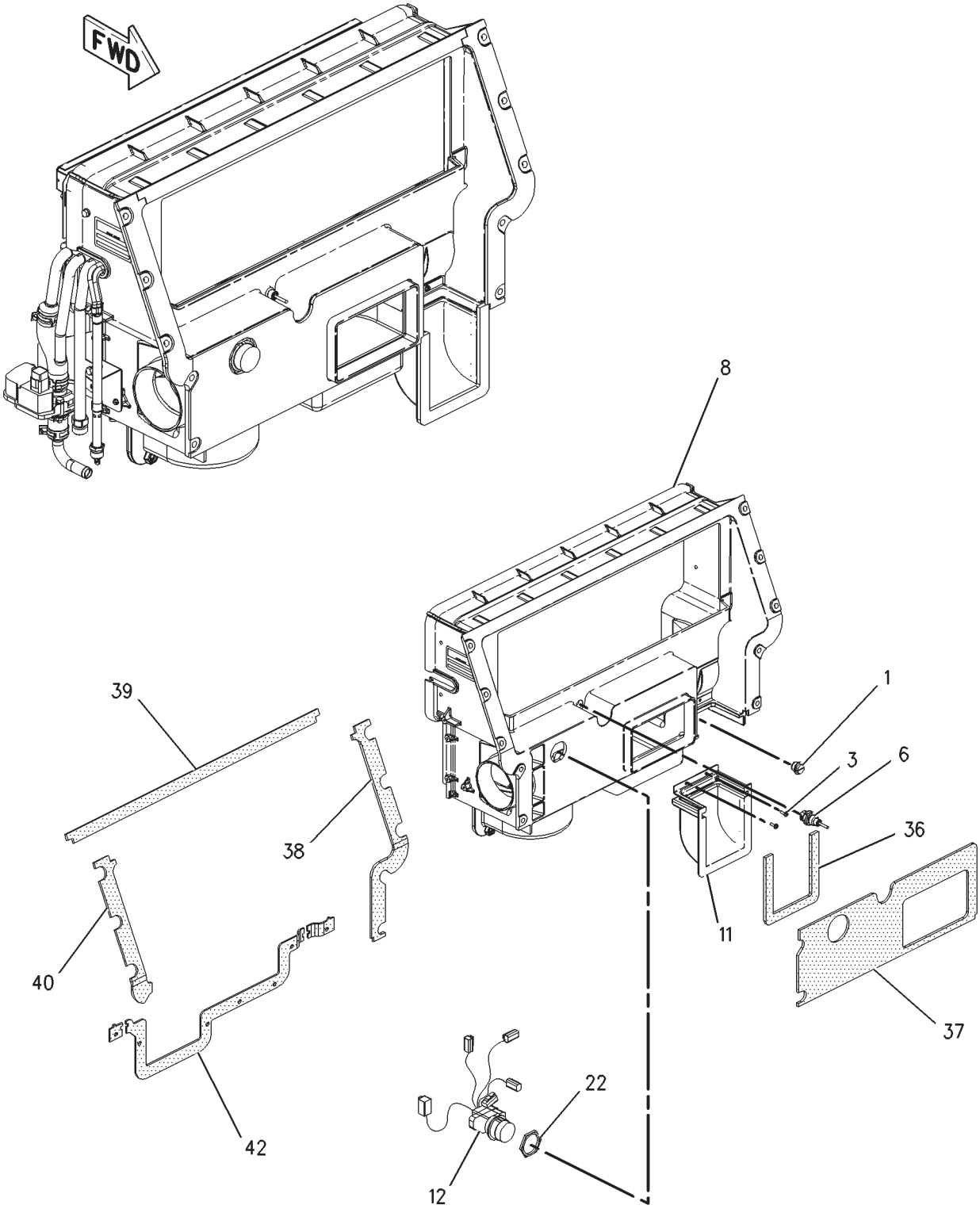

00826614

AIR CONDITIONER GP-DELUXE - 152-0427

(S/N: PRIOR TO BAM40575;BBP40461; BCC40683;BDS40763)

ITEM	NUMBER	QTY	DESCRIPTION
-	152-0427	--	AIR CONDITIONER GP [A] (NOT SERVICED)
1	1P-1669	1	PLUG-SEAL
3	8L-9381	7	SCREW-TAPPING (8-32X0.50 IN)
6	130-9811	2	SENSOR GP-TEMPERATURE
8	168-2311	1	CASE ASY.
11	501706D1	1	DUCT - FRESH AIR
12	168-2322	1	HARNESS ASY. (AIR CONDITIONER)
22	180-9214	1	NUT (11/16-18 THD)
36	180-2465	1	GASKET
37	180-2466	1	GASKET
38	180-2467	1	GASKET
39	180-2468	1	GASKET
40	180-2469	1	GASKET
42	180-2471	1	GASKET

[A] PART OF 166-4592 AIR CONDITIONER AND MOUNTING GP

00826614
PR: t05i29k58b0473

AIR CONDITIONER GP-DELUXE - 502499D1

**(S/N: EFF BAM40575;BBP40461;
BCC40683;BDS40763)**

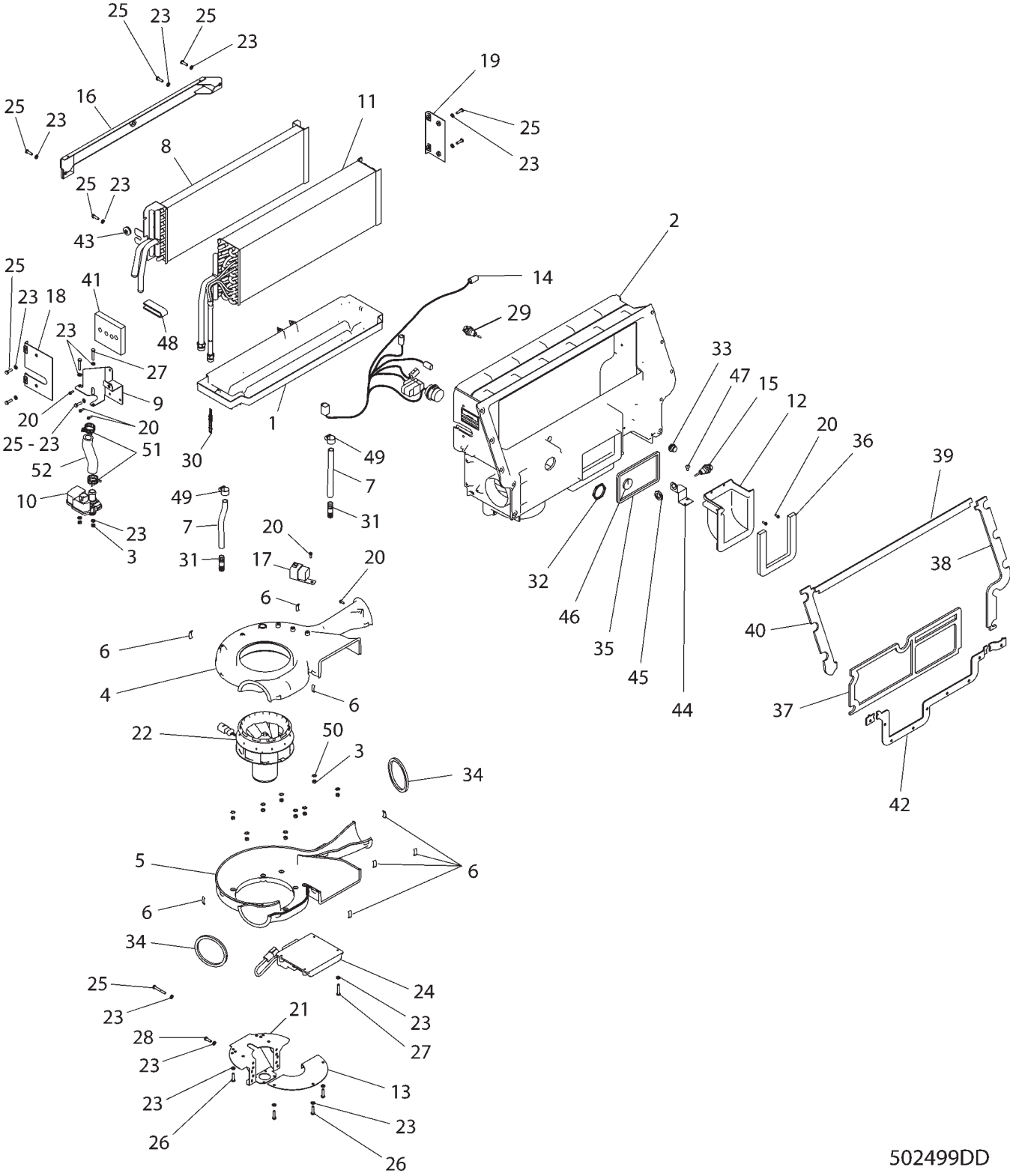

AIR CONDITIONER GP-DELUXE - 502499D1

(S/N: EFF BAM40575;BBP40461; BCC40683;BDS40763)

ITEM	NUMBER	QTY	DESCRIPTION
-	502499D1	--	CONDITIONER GP-AIR [A] (NOT SERVICED)
1	501705D1	1	PAN-DRAIN
2	501701D2	1	CASE AS
3	400300X1	11	NUT M6X1
4	501703D1	1	HOUSING-BLOWER
5	501704D1	1	HOUSING-BLOWER
6	400296X1	10	CLIP
7	400298X1	4	TUBE-BULK
8	501708D1	1	COIL AS.-HEATER
9	501712D1	1	BRACKET AS.
10	501700D1	1	VALVE AS.-WATER
11	501709D1	1	COIL AS.-EVAP
12	501706D1	1	DUCT-FRESH AIR
13	501731D1	1	BRACKET AS.
14	501707D2	1	HARNESS AS
15	501697D1	2	SENSOR GP.
16	501713D1	1	BRACKET AS.
17	400292X1	1	RELAY AS.
18	501714D1	1	RETAINER
19	501716D1	1	RETAINER
20	400305X1	7	SCREW-SELF TAPPING
21	501730D1	1	BRACKET AS.
22	501702D1	1	FAN AS.
23	400310X1	28	WASHER
24	501717D1	1	CONTROL AS.
25	400221X1	11	BOLT-M6X1X20MM ZNDI HHD 10.9
26	400022X1	5	BOLT-M6X1X25MM ZNDI HHD 10.9
27	400185X1	6	BOLT-M6X1X35MM ZNDI HHD 10.9
28	400307X1	4	BOLT M6X1
29	400293X1	1	SENSOR AS.
30	400932X1	1	ORIFICE AS.-A/C
31	400309X1	2	CONNECTOR
32	400295X1	1	NUT-HEX
33	400297X1	1	PLUG
34	501718D1	2	GASKET
35	501719D1	1	GASKET
36	501720D2	1	GASKET
37	501721D2	1	GASKET
38	501722D2	1	GASKET
39	501723D2	1	GASKET
40	501724D2	1	GASKET
41	501725D1	1	GASKET
42	501726D1	1	GASKET
43	501146D1	1	GROMMET-WIRE
44	502033D1	1	BRACKET
45	400780X1	1	NUT-JAM #8 3/4-16 UNF 2B
46	502036D1	1	GASKET HVAC SENSOR PROBE
47	CH217-5909	2	SCREW-1/4-15X12.7 PAN THD CTG
48	502528D1	1	TAPE-REFRIGERANT
49	400109X1	2	CLAMP-HOSE
50	400301X1	9	LOCKWASHER-TOOTH
51	400308X1	2	CLAMP-HOSE
52	501738D1	AR	HOSE-HEATER (3/4ID) (20CM)

[A] PART OF 502501D1
AIR CONDITIONER & MTG GP

502499DD
PR: t05i29k58b0474

ANTENNA GP-RADIO - 168-1951

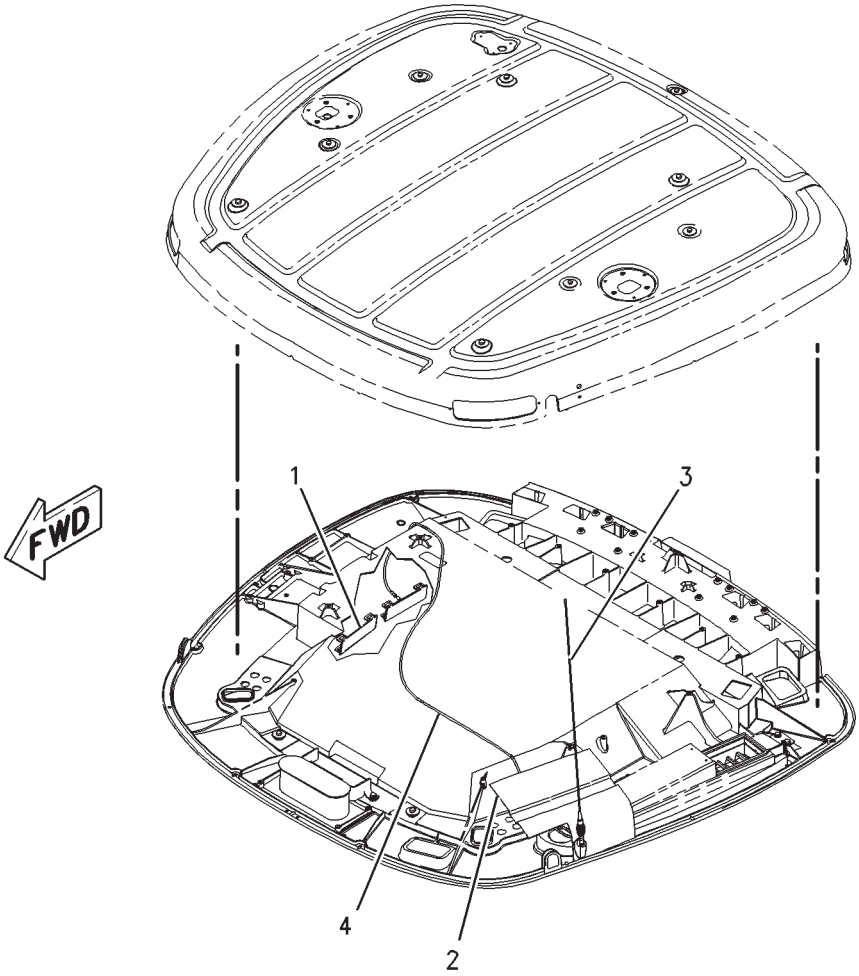

00786383

ANTENNA GP-RADIO - 168-1951

ITEM	NUMBER	QTY	DESCRIPTION
-	168-1951	--	ANTENNA GP-RADIO [A] (NOT SERVICED)
1	400128X1	2	COVER
2	136-5330	1	PLATE-GROUNDING
3	CH166-4615	1	ANTENNA
4	171-1576	1	CABLE-ANTENNA

[A] PART OF 500841D1; 500842D1;
500844D1; 500849D1 CAB AR

00786383
PR: t05i29k58b0475

ANTENNA GP-RADIO - 210-1570
BUSINESS BAND

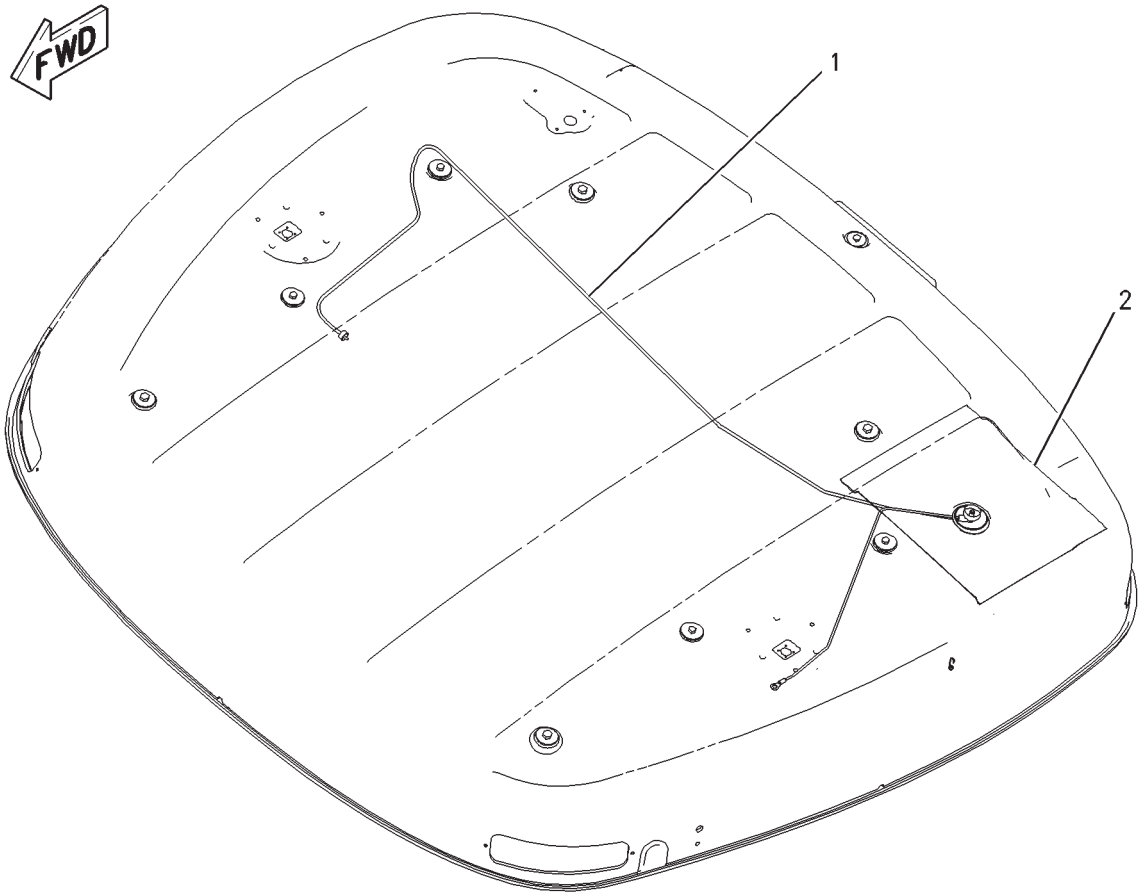

00835371

ANTENNA GP-RADIO - 210-1570
BUSINESS BAND

ITEM	NUMBER	QTY	DESCRIPTION
-	210-1570	--	ANTENNA GP-RADIO [A] (NOT SERVICED)
1	209-8430	1	CABLE
2	210-2654	1	PLATE-GROUND

[A] PART OF 500843D1; 500849D1 CAB AR

00835371
PR: t05i29k58b0476

CAB AR-BASIC - 500842D1
EAME ONLY

NO ILLUSTRATION

NOTIF

CAB AR-BASIC - 500842D1
EAME ONLY

ITEM	NUMBER	QTY	DESCRIPTION
-	500842D1	--	CAB AR-BASIC (SERVICED BY COMPONENTS)
1	136-5477	1	WIRING GP-ARMREST (NOT SERVICED) (SEE BREAKDOWN FOR COMPONENTS)
2	152-0004	1	CAB GP-BASIC (SEE BREAKDOWN FOR COMPONENTS)
3	152-0005	1	WIRING GP-CAB (NOT SERVICED) (SEE BREAKDOWN FOR COMPONENTS)
4	152-0418	1	LINER GP-OPERATOR (NOT SERVICED) (SEE BREAKDOWN FOR COMPONENTS)
5	152-0419	1	SPEAKER GP-RADIO (NOT SERVICED) (SEE BREAKDOWN FOR COMPONENTS)
6	152-0424	1	VISOR GP-CAB (FRONT) (NOT SERVICED) (SEE BREAKDOWN FOR COMPONENTS)
7	500768D1	1	CONSOLE GP (NOT SERVICED) (SEE BREAKDOWN FOR COMPONENTS)
8	152-0433	1	SEAT GP-TRAINING (NOT SERVICED) (SEE BREAKDOWN FOR COMPONENTS)
9	500839D1	1	CONSOLE GP-MTG & (NOT SERVICED) (SEE BREAKDOWN FOR COMPONENTS)
10	152-0438	1	CONTROL GP-BRAKE & CLUTCH (NOT SERVICED) (SEE BREAKDOWN FOR COMPONENTS)
11	152-0444	1	ROOF GP-CAB (NOT SERVICED) (SEE BREAKDOWN FOR COMPONENTS)
12	152-0447	1	CONTROL GP-DECELERATOR (NOT SERVICED) (SEE BREAKDOWN FOR COMPONENTS)
13	162-4101	1	LIGHTING GP-WARNING (NOT SERVICED) (SEE BREAKDOWN FOR COMPONENTS)
14	151-9986	1	AIR CONDITIONER & MTG GP (S/N: PRIOR TO BAM50633;BBP50486;BCC50765;BDS50909) (NOT SERVICED) (SEE BREAKDOWN FOR COMPONENTS)
14	502502D1	1	AIR CONDITIONER & MTG GP (S/N: EFF BAM50633;BBP50486;BCC50765;BDS50909) (NOT SERVICED) (SEE BREAKDOWN FOR COMPONENTS)
15	168-1946	1	WIRING GP-CONSOLE (NOT SERVICED) (SEE BREAKDOWN FOR COMPONENTS)
16	168-1951	1	ANTENNA GP-RADIO (NOT SERVICED) (SEE BREAKDOWN FOR COMPONENTS)
17	172-6857	1	CONTROL GP-PARKING BRAKE (NOT SERVICED) (SEE BREAKDOWN FOR COMPONENTS)
18	196-3968	1	WIPER GP (DELUXE) (NOT SERVICED) (SEE BREAKDOWN FOR COMPONENTS)
19	206-0588	1	MIRROR GP (NOT SERVICED) (SEE BREAKDOWN FOR COMPONENTS)
20	208-2880	1	LINES GP-HEATER (NOT SERVICED) (SEE BREAKDOWN FOR COMPONENTS)
21	209-5608	1	MIRROR GP-REAR VIEW (NOT SERVICED) (SEE BREAKDOWN FOR COMPONENTS)
22	224-3917	1	TRIM GP-CAB (NOT SERVICED) (SEE BREAKDOWN FOR COMPONENTS)
23	500761D1	1	COVER GP (NOT SERVICED) (SEE BREAKDOWN FOR COMPONENTS)

NOTIF
PR: t05i29k58b0477

CAB AR-DELUXE - 500841D1
EAME ONLY

NO ILLUSTRATION

NOTIF

CAB AR-DELUXE - 500841D1
EAME ONLY

ITEM	NUMBER	QTY	DESCRIPTION
-	500841D1	--	CAB AR-DELUXE (SERVICED BY COMPONENTS)
1	136-5477	1	WIRING GP-ARMREST (NOT SERVICED) (SEE BREAKDOWN FOR COMPONENTS)
2	152-0004	1	CAB GP-BASIC (SEE BREAKDOWN FOR COMPONENTS)
3	152-0005	1	WIRING GP-CAB (NOT SERVICED) (SEE BREAKDOWN FOR COMPONENTS)
4	152-0418	1	LINER GP-OPERATOR (NOT SERVICED) (SEE BREAKDOWN FOR COMPONENTS)
5	152-0419	1	SPEAKER GP-RADIO (NOT SERVICED) (SEE BREAKDOWN FOR COMPONENTS)
6	152-0424	1	VISOR GP-CAB (FRONT) (NOT SERVICED) (SEE BREAKDOWN FOR COMPONENTS)
7	500768D1	1	CONSOLE GP (NOT SERVICED) (SEE BREAKDOWN FOR COMPONENTS)
8	152-0433	1	SEAT GP-TRAINING (NOT SERVICED) (SEE BREAKDOWN FOR COMPONENTS)
9	500839D1	1	CONSOLE GP-MTG & (NOT SERVICED) (SEE BREAKDOWN FOR COMPONENTS)
10	152-0438	1	CONTROL GP-BRAKE & CLUTCH (NOT SERVICED) (SEE BREAKDOWN FOR COMPONENTS)
11	152-0444	1	ROOF GP-CAB (NOT SERVICED) (SEE BREAKDOWN FOR COMPONENTS)
12	152-0447	1	CONTROL GP-DECELERATOR (NOT SERVICED) (SEE BREAKDOWN FOR COMPONENTS)
13	162-4101	1	LIGHTING GP-WARNING (NOT SERVICED) (SEE BREAKDOWN FOR COMPONENTS)
14	166-4592	1	CONDITIONER GP-MOUNTING & (NOT SERVICED) (S/N: PRIOR TO BAM50619;BBP50482; BCC50756;BDS50902) (SEE BREAKDOWN FOR COMPONENTS)
14	502501D1	1	CONDITIONER GP-MOUNTING & (NOT SERVICED) (S/N: EFF BAM50619;BBP50482; BCC50756;BDS50902) (SEE BREAKDOWN FOR COMPONENTS)
15	168-1946	1	WIRING GP-CONSOLE (NOT SERVICED) (SEE BREAKDOWN FOR COMPONENTS)
16	168-1951	1	ANTENNA GP-RADIO (NOT SERVICED) (SEE BREAKDOWN FOR COMPONENTS)
17	172-6857	1	CONTROL GP-PARKING BRAKE (NOT SERVICED) (SEE BREAKDOWN FOR COMPONENTS)
18	196-3968	1	WIPER GP (DELUXE) (NOT SERVICED) (SEE BREAKDOWN FOR COMPONENTS)
19	206-0588	1	MIRROR GP (NOT SERVICED) (SEE BREAKDOWN FOR COMPONENTS)
20	208-2881	1	LINES GP-HEATER (NOT SERVICED) (SEE BREAKDOWN FOR COMPONENTS)
21	209-5608	1	MIRROR GP-REAR VIEW (NOT SERVICED) (SEE BREAKDOWN FOR COMPONENTS)
22	224-3917	1	TRIM GP-CAB (NOT SERVICED) (SEE BREAKDOWN FOR COMPONENTS)
23	173-6501	1	WIRING GP-SHUTOFF (TIME DELAY LIGHTING) (NOT SERVICED) (SEE BREAKDOWN FOR COMPONENTS)
24	500761D1	1	COVER GP (NOT SERVICED) (SEE BREAKDOWN FOR COMPONENTS)

NOTIF
PR: t05i29k58b0478

CAB AR-BASIC - 500844D1
ROW & SPECIAL APPLICATIONS

NO ILLUSTRATION

NOTIF

CAB AR-BASIC - 500844D1
ROW & SPECIAL APPLICATIONS

ITEM	NUMBER	QTY	DESCRIPTION
-	500844D1	--	CAB AR (NOT SERVICED)
1	136-5477	1	WIRING GP-CONSOLE (NOT SERVICED) (SEE BREAKDOWN FOR COMPONENTS)
2	151-9986	1	AIR CONDITIONER & MTG GP (S/N: PRIOR TO BAM50633;BBP50486;BCC50765;BDS50909) (NOT SERVICED) (SEE BREAKDOWN FOR COMPONENTS)
2	502502D1	1	AIR CONDITIONER & MTG GP (S/N: EFF BAM50633;BBP50486;BCC50765;BDS50909) (NOT SERVICED) (SEE BREAKDOWN FOR COMPONENTS)
3	152-0003	1	CAB GP (SEE BREAKDOWN FOR COMPONENTS)
4	152-0417	1	ROOF GP-CAB (NOT SERVICED) (SEE BREAKDOWN FOR COMPONENTS)
5	152-0418	1	HEADLINER GP (NOT SERVICED) (SEE BREAKDOWN FOR COMPONENTS)
6	152-0420	1	WIRING GP-CAB (NOT SERVICED) (SEE BREAKDOWN FOR COMPONENTS)
7	500768D1	1	CONSOLE GP (NOT SERVICED) (SEE BREAKDOWN FOR COMPONENTS)
8	152-0433	1	SEAT GP-COMPANION (NOT SERVICED) (SEE BREAKDOWN FOR COMPONENTS)
9	500839D1	1	CONSOLE GP & MTG (NOT SERVICED) (SEE BREAKDOWN FOR COMPONENTS)
10	152-0438	1	CONTROL GP-CLUTCH & BRAKE (NOT SERVICED) (SEE BREAKDOWN FOR COMPONENTS)
11	152-0447	1	CONTROL GP-DECELERATOR (NOT SERVICED) (SEE BREAKDOWN FOR COMPONENTS)
12	168-1951	1	ANTENNA GP-RADIO (NOT SERVICED) (SEE BREAKDOWN FOR COMPONENTS)
13	208-2880	1	LINES GP-HEATER (NOT SERVICED) (SEE BREAKDOWN FOR COMPONENTS)
14	224-3917	1	TRIM GP-CAB (NOT SERVICED) (SEE BREAKDOWN FOR COMPONENTS)

NOTIF
PR: t05i29k58b0479

CAB AR-DELUXE - 500843D1

MT835 & MT845
ROW & SPECIAL APPLICATIONS

NO ILLUSTRATION

NOTIF

CAB AR-DELUXE - 500843D1

MT835 & MT845
ROW & SPECIAL APPLICATIONS

ITEM	NUMBER	QTY	DESCRIPTION
-	500843D1	--	CAB AR (NOT SERVICED)
1	136-5477	1	WIRING GP-ARMREST (NOT SERVICED) (SEE BREAKDOWN FOR COMPONENTS)
2	136-5659	1	BATTERY & WIRING GP (NOT SERVICED (SEE BREAKDOWN FOR COMPONENTS)
3	152-0003	1	CAB GP (SEE BREAKDOWN FOR COMPONENTS)
4	152-0417	1	ROOF GP-CAB (NOT SERVICED) (SEE BREAKDOWN FOR COMPONENTS)
5	152-0418	1	HEADLINER GP (NOT SERVICED) (SEE BREAKDOWN FOR COMPONENTS)
6	152-0419	1	SPEAKER GP-RADIO (NOT SERVICED) (SEE BREAKDOWN FOR COMPONENTS)
7	152-0420	1	WIRING GP-CAB (NOT SERVICED) (SEE BREAKDOWN FOR COMPONENTS)
8	152-0424	1	VISOR GP-CAB (FRONT)(NOT SERVICED) (SEE BREAKDOWN FOR COMPONENTS)
9	500768D1	1	CONSOLE GP (NOT SERVICED) (SEE BREAKDOWN FOR COMPONENTS)
10	152-0433	1	SEAT GP-COMPANION (NOT SERVICED) (SEE BREAKDOWN FOR COMPONENTS)
11	500839D1	1	CONSOLE GP-MOUNTING (NOT SERVICED) (SEE BREAKDOWN FOR COMPONENTS)
12	152-0438	1	CONTROL GP-CLUTCH & BRAKE (NOT SERVICED) (SEE BREAKDOWN FOR COMPONENTS)
13	152-0447	1	CONTROL GP-DECELERATOR (NOT SERVICED) (SEE BREAKDOWN FOR COMPONENTS)
14	162-4096	1	WIRING GP-SHUTOFF (ENGINE) (NOT SERVICED) (SEE BREAKDOWN FOR COMPONENTS)
15	162-4097	1	WIRING GP-CONSOLE (NOT SERVICED) (SEE BREAKDOWN FOR COMPONENTS)
16	166-4592	1	CONDITIONER GP-MOUNTING & (NOT SERVICED) (S/N: PRIOR TO BAM50619;BBP50482; BCC50756;BDS50902) (SEE BREAKDOWN FOR COMPONENTS)
16	502501D1	1	CONDITIONER GP-MOUNTING & (NOT SERVICED) (S/N: EFF BAM50619;BBP50482; BCC50756;BDS50902) (SEE BREAKDOWN FOR COMPONENTS)
17	168-1951	1	ANTENNA GP-RADIO (AM/FM) (NOT SERVICED) (SEE BREAKDOWN FOR COMPONENTS)
18	173-6501	1	WIRING GP-SHUTOFF (TIME DELAY LIGHTING) (NOT SERVICED) (SEE BREAKDOWN FOR COMPONENTS)
19	196-3968	1	WIPER GP-WINDOW (NOT SERVICED) (SEE BREAKDOWN FOR COMPONENTS)
20	208-2881	1	LINES GP-HEATER (NOT SERVICED) (SEE BREAKDOWN FOR COMPONENTS)
21	209-5608	1	MIRROR GP-REAR VIEW (NOT SERVICED) (SEE BREAKDOWN FOR COMPONENTS)
22	210-1570	1	ANTENNA GP-RADIO (BUSINESS BAND) (NOT SERVICED) (SEE BREAKDOWN FOR COMPONENTS)
23	224-3917	1	TRIM GP-CAB (NOT SERVICED) (SEE BREAKDOWN FOR COMPONENTS)

NOTIF
PR: t05i29k58b0480

CAB AR-DELUXE - 500849D1

MT855 & MT865
ROW & SPECIAL APPLICATIONS

NO ILLUSTRATION

NOTIF

CAB AR-DELUXE - 500849D1

MT855 & MT865
ROW & SPECIAL APPLICATIONS

ITEM	NUMBER	QTY	DESCRIPTION
-	500849D1	--	CAB AR (NOT SERVICED)
1	136-5477	1	WIRING GP-ARMREST (NOT SERVICED) (SEE BREAKDOWN FOR COMPONENTS)
2	136-5663	1	BATTERY & WIRING GP (NOT SERVICED (SEE BREAKDOWN FOR COMPONENTS)
3	152-0003	1	CAB GP (SEE BREAKDOWN FOR COMPONENTS)
4	152-0417	1	ROOF GP-CAB (NOT SERVICED) (SEE BREAKDOWN FOR COMPONENTS)
5	152-0418	1	HEADLINER GP (NOT SERVICED) (SEE BREAKDOWN FOR COMPONENTS)
6	152-0419	1	SPEAKER GP-RADIO (NOT SERVICED) (SEE BREAKDOWN FOR COMPONENTS)
7	152-0420	1	WIRING GP-CAB (NOT SERVICED) (SEE BREAKDOWN FOR COMPONENTS)
8	152-0424	1	VISOR GP-CAB (FRONT)(NOT SERVICED) (SEE BREAKDOWN FOR COMPONENTS)
9	500768D1	1	CONSOLE GP (NOT SERVICED) (SEE BREAKDOWN FOR COMPONENTS)
10	152-0433	1	SEAT GP-COMPANION (NOT SERVICED) (SEE BREAKDOWN FOR COMPONENTS)
11	500839D1	1	CONSOLE GP-MOUNTING (NOT SERVICED) (SEE BREAKDOWN FOR COMPONENTS)
12	152-0438	1	CONTROL GP-CLUTCH & BRAKE (NOT SERVICED) (SEE BREAKDOWN FOR COMPONENTS)
13	152-0447	1	CONTROL GP-DECELERATOR (NOT SERVICED) (SEE BREAKDOWN FOR COMPONENTS)
14	162-4096	1	WIRING GP-SHUTOFF (ENGINE) (NOT SERVICED) (SEE BREAKDOWN FOR COMPONENTS)
15	162-4097	1	WIRING GP-CONSOLE (NOT SERVICED) (SEE BREAKDOWN FOR COMPONENTS)
16	166-4592	1	CONDITIONER GP-MOUNTING & (NOT SERVICED) (S/N: PRIOR TO BAM50619;BBP50482; BCC50756;BDS50902) (SEE BREAKDOWN FOR COMPONENTS)
16	502501D1	1	CONDITIONER GP-MOUNTING & (NOT SERVICED) (S/N: EFF BAM50619;BBP50482; BCC50756;BDS50902) (SEE BREAKDOWN FOR COMPONENTS)
17	168-1951	1	ANTENNA GP-RADIO (AM/FM) (NOT SERVICED) (SEE BREAKDOWN FOR COMPONENTS)
18	173-6501	1	WIRING GP-SHUTOFF (TIME DELAY LIGHTING) (NOT SERVICED) (SEE BREAKDOWN FOR COMPONENTS)
19	196-3968	1	WIPER GP-WINDOW (NOT SERVICED) (SEE BREAKDOWN FOR COMPONENTS)
20	208-2881	1	LINES GP-HEATER (NOT SERVICED) (SEE BREAKDOWN FOR COMPONENTS)
21	209-5608	1	MIRROR GP-REAR VIEW (NOT SERVICED) (SEE BREAKDOWN FOR COMPONENTS)
22	210-1570	1	ANTENNA GP-RADIO (BUSINESS BAND) (NOT SERVICED) (SEE BREAKDOWN FOR COMPONENTS)
23	224-3917	1	TRIM GP-CAB (NOT SERVICED) (SEE BREAKDOWN FOR COMPONENTS)

NOTIF
PR: t05i29k58b0481

CAB GP - 152-0003
ROW & SPECIAL APPLICATIONS

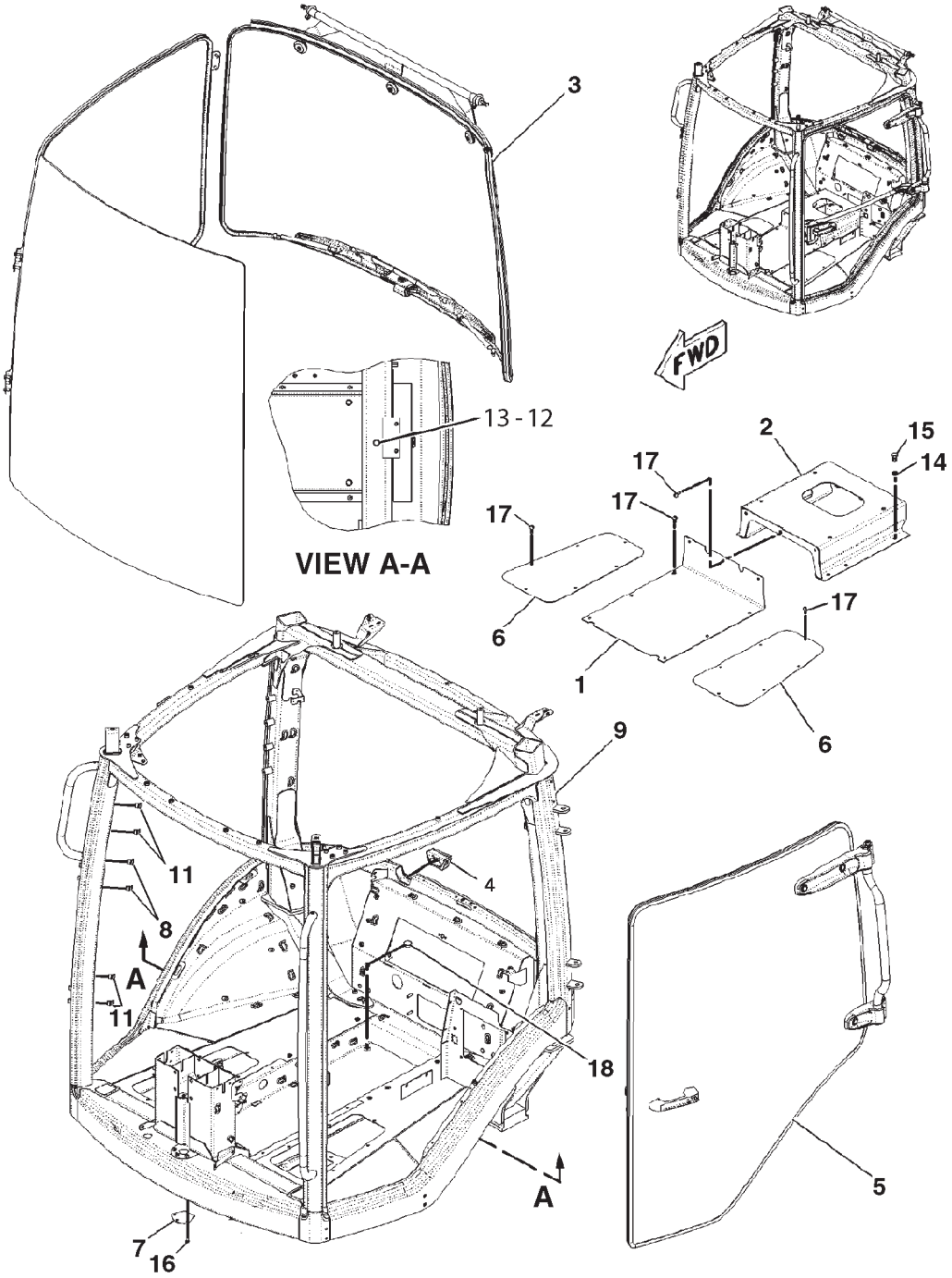

0888610B

CAB GP - 152-0003
ROW & SPECIAL APPLICATIONS

ITEM	NUMBER	QTY	DESCRIPTION
-	152-0003	--	CAB GP [A]
1	151-8559	1	PLATE-COVER
2	151-9961	1	PLATE ASM-SEAT PEDISTAL
3	151-9994	1	WINDOW GP-CAB (NOT SERVICED) (SEE BREAKDOWN FOR COMPONENTS)
4	164-7017	1	SEAL-WIRING (REAR)
5	164-7068	1	DOOR GP-LH (NOT SERVICED) (S/N: PRIOR TO BAM40608; BBP40474; BCC40741; BDS40890) (FOR COMPLETE REPLACEMENT, ORD EFF) (SEE BREAKDOWN FOR COMPONENTS)
5	500927D1	1	DOOR GP-LH (NOT SERVICED) (S/N: EFF BAM40608; BBP40474; BCC40741; BDS40890) (SEE BREAKDOWN FOR COMPONENTS)
6	166-4558	2	COVER-FLOOR MODULE
7	180-9966	1	COVER
8	CH187-4902	8	INSERT
9	-----	1	FRAME AS (ORDER CAB GP)
10	-----		NOT USED
11	CH225-6215	4	BUTTON-PLUG
12	CH3E-4353	1	WASHER-HARD (11X25X3)
13	400190X1	1	BOLT (M12X1.75X16MM)
14	400287X1	6	WASHER-HARD (11X21X2.5)
15	400058X1	6	BOLT (M10X1.5X30MM)
16	400227X1	5	BOLT (M8X1.25X16MM)
17	CH9X-2042	21	SCREW-TRUSS HEAD (M6X1X12MM)
18	CH9X-3994	2	PLUG

[A] PART OF 500843D1; 500844D1; 500849D1
CAB AR

0888610B
PR: t05i29k58b0482

CAB GP - 152-0004
EAME ONLY

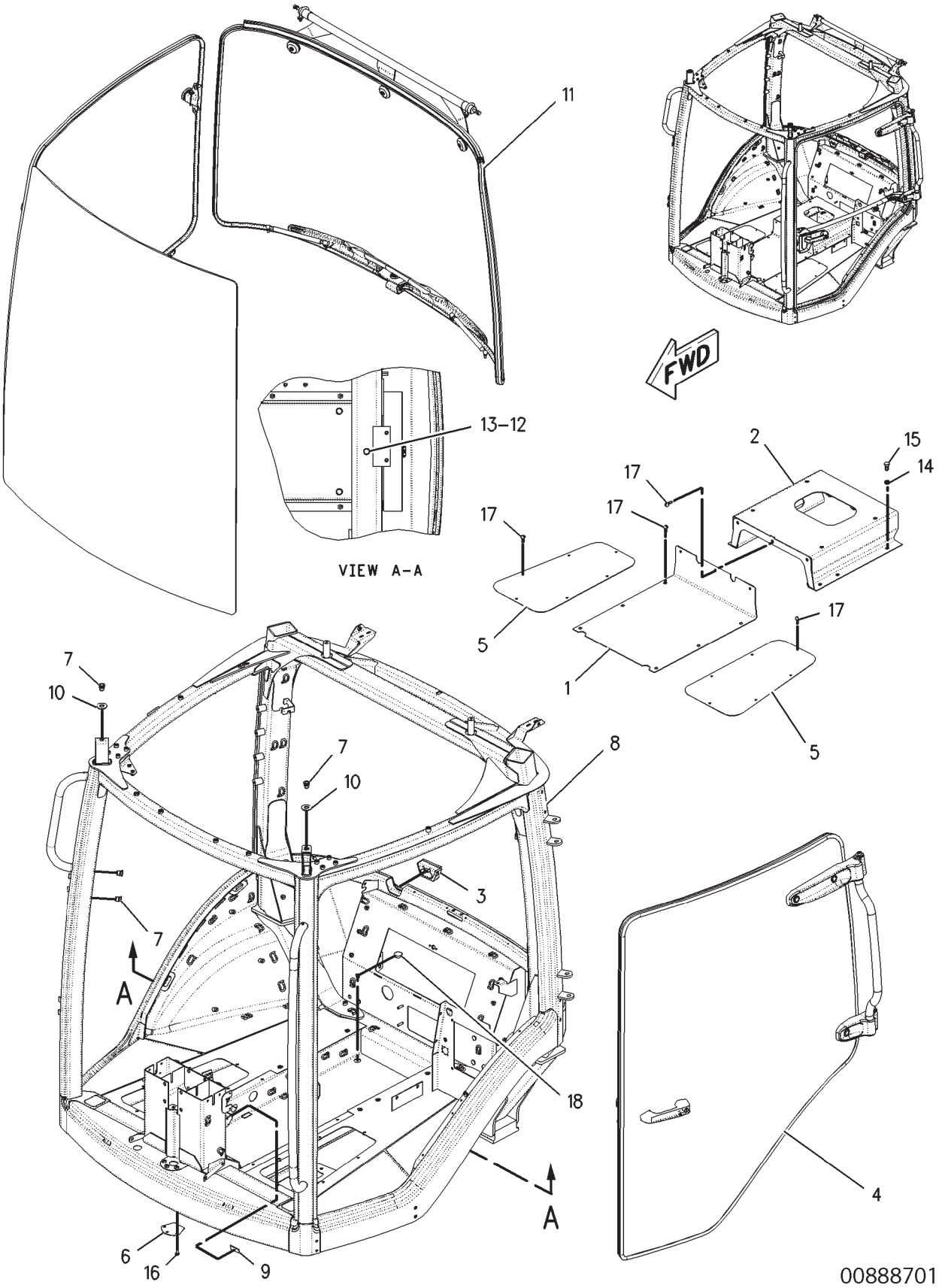

CAB GP - 152-0004
EAME ONLY

ITEM	NUMBER	QTY	DESCRIPTION
-	152-0004	--	CAB GP [A]
1	151-8559	1	PLATE-COVER
2	151-9961	1	PLATE AS-SEAT PEDISTAL
3	164-7017	1	SEAL
4	164-7068	1	DOOR GP-LH (NOT SERVICED) (S/N: PRIOR TO BAM40608; BBP40474; BCC60741; BDS40890) (FOR COMPLETE REPLACEMENT, ORD EFF) (SEE BREAKDOWN FOR COMPONENTS)
4	500927D1	1	DOOR GP-LH (NOT SERVICED) (S/N: EFF BAM40608; BBP40474; BCC60741; BDS40890) (SEE BREAKDOWN FOR COMPONENTS)
5	166-4558	2	COVER
6	180-9966	1	COVER
7	CH187-4902	6	INSERT
8	-----	1	FRAME AS (ORDER CAB GP)
9	202-0843	1	PAD
10	090-8865	2	SPACER (17X40X3MM THK)
11	151-9995	1	GLASS GP-WINDSHIELD (NOT SERVICED) (SEE BREAKDOWN FOR COMPONENTS)
12	CH3E-4353	1	WASHER-HARD (11X25X3MM THK)
13	400190X1	1	BOLT (M12X1.75X16MM)
14	400287X1	6	WASHER-HARD (11X21X2.5MM THK)
15	400058X1	6	BOLT (M10X1.5X30MM)
16	400227X1	5	BOLT (M8X1.25X16MM)
17	CH9X-2042	21	SCREW-TRUSS HEAD (M6X1X12MM)
18	CH9X-3994	2	PLUG

[A] PART OF 500841D1;500842D1 CAB AR

00888701
PR: t05i29k58b0483

COMPRESSOR GP-REFRIGERANT - CH178-9570

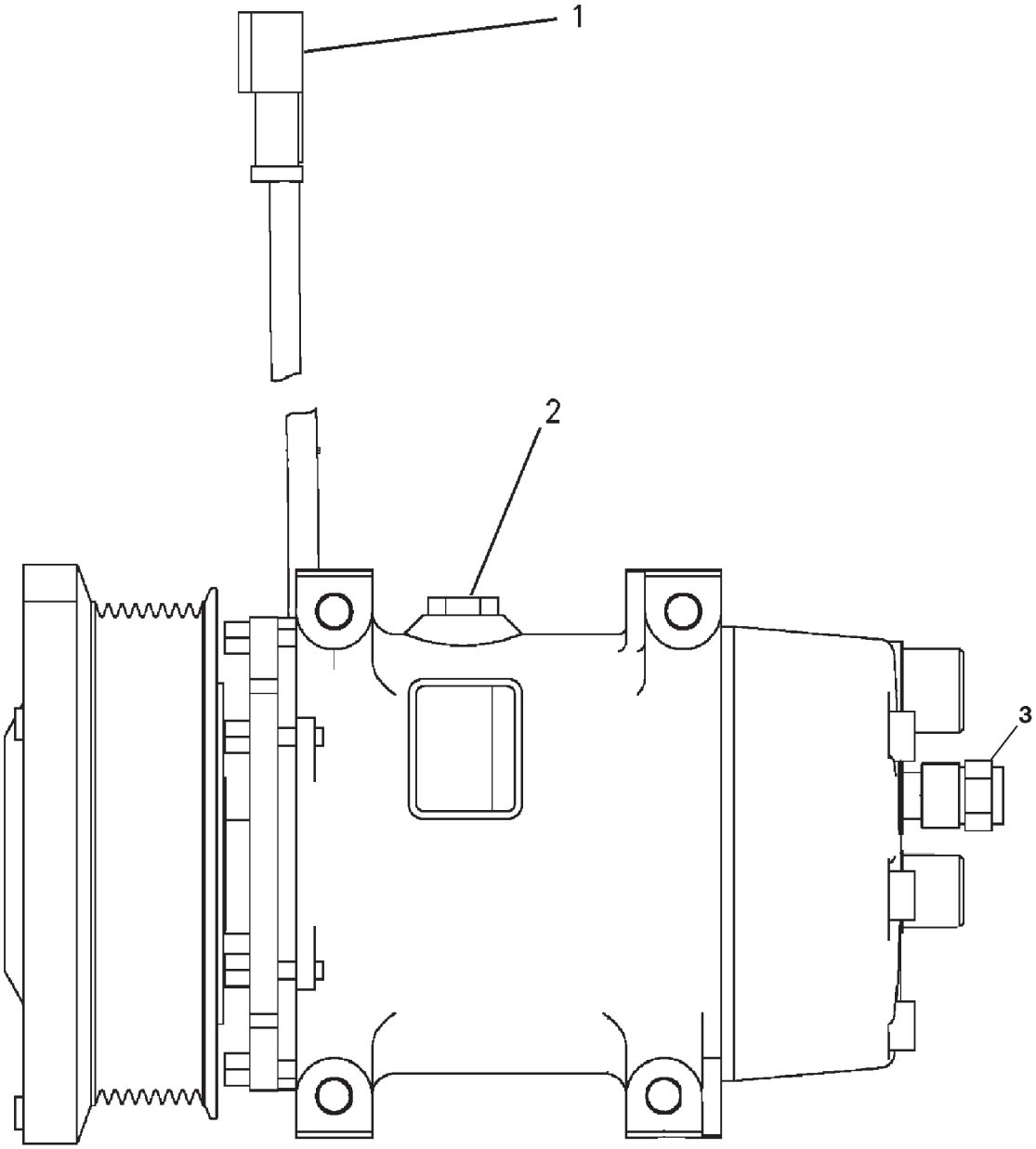

0777332A

COMPRESSOR GP-REFRIGERANT - CH178-9570

ITEM	NUMBER	QTY	DESCRIPTION
-	CH178-9570	--	COMPRESSOR GP-REFRIGERANT [A]
1	CH102-8802	1	KIT-RECEPTACLE (2 PIN)
			(INCLUDES WEDGE AND RECEPTACLE ASM)
			(SERVICED AS COMPLETE KIT ONLY)
2	CH7T-4532	1	PLUG ASM (W/SEAL)
3	CH114-3469	1	VALVE ASM (INCL SEAL)
	CH9X-7378	1	SEAL

[A] PART OF 187-1792 MOUNTING GP-REFRIGERANT COMPR

0777332A
PR: t05i29k58b0484

CONSOLE GP-OPERATOR - 152-0434
WITH PTO

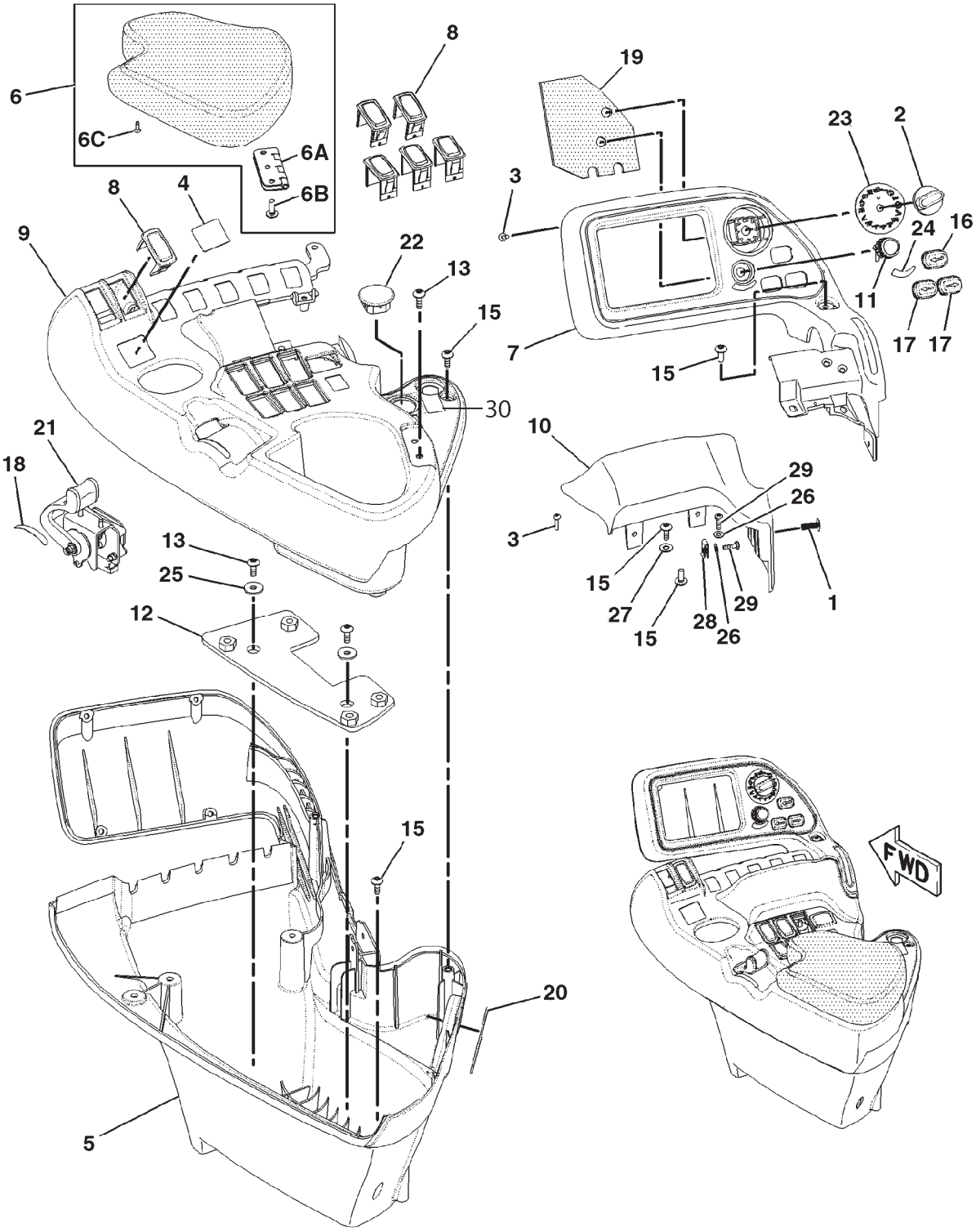

1520434A

CONSOLE GP-OPERATOR - 152-0434
WITH PTO

ITEM	NUMBER	QTY	DESCRIPTION
-	152-0434	--	CONSOLE GP-OPERATOR [A] (NOT SERVICED)
1	400110X1	2	CLIP-TREE
2	CH157-0449	1	KNOB-CONTROL (TRACTOR MGMT CENTER SELECTOR)
3	CH9X-1046	6	SCREW (M4X0.7X18MM)
4	501524D1	1	FILM (TRANSMISSION SHIFT)
5	162-6737	1	CONSOLE ASY. (BOTTOM)
	179-4207	3	INSERT (M6X1 THD)
6	162-6738	1	PAD ASY. (ARM)
6A	162-4105	1	HINGE ASY.
6B	207-2021	3	SCREW
6C	207-2022	5	SCREW
7	164-7042	1	HOUSING ASY.
	173-8818	4	INSERT (M4X0.7 THD)
8	CH165-5975	6	PLUG
9	502064D1	1	CONSOLE ASY. (TOP)
	173-8818	2	INSERT (M4X0.7 THD)
	179-4206	13	INSERT (M5X0.8 THD)
10	166-4608	1	PAD (PALM)
11	CH168-2333	1	KNOB (TRACTOR MGMT CENTER ADJUSTMENT)
12	169-6390	1	PLATE AS
	CH8T-3490	4	NUT-WELD (M10X1.5 THD)
13	CH207-2021	4	SCREW
15	CH9X-2044	7	SCREW-TRUSS HEAD (M6X1X16MM)
16	CH178-7962	1	BUTTON (TRACTOR MGMT CENTER ENTER KEY)
17	CH178-7963	2	BUTTON (TRACTOR MGMT CENTER TAB KEYS)
18	501531D1	1	FILM (THROTTLE INSTRUCTION)
19	180-5237	1	SEAL
20	221-5433	1	COVER
21	207-2031	1	CONTROL GP-GOVERNOR (NOT SERVICED) (SEE BREAKDOWN FOR COMPONENTS)
22	CH207-2039	1	PLUG
23	501521D1	1	FILM-IDENTIFICATION (TRACTOR MGMT CENTER SELECTOR)
24	501522D1	1	FILM-IDENTIFICATION (TRACTOR MGMT CENTER ADJUSTMENT)
25	CH9X-6165	2	WASHER (6.5X22X2.5MM THK)
26	CH2A-3211	2	WASHER (5.5X12.3X.8MM THK)
27	CH5P-0537	1	WASHER-HARD (7.2X14.5X2MM THK)
28	400356X1	1	CLIP-SPRING (M5X.8-6H)
29	CH8T-6693	2	SCREW-MACHINE (M5X0.8X16MM)
30	501532D1	1	FILM-PTO
-	501530D1	1	DECAL SHEET-CONSOLE (NOT SHOWN) (INCLS ALL DECALS)

[A] PART OF 152-0436 SEAT GP; 500484D2; 500485D2;500486D2;500487D2;500488D2; 500489D2;500491D2;500791D2;500792D2; 500793D2;500794D2 ARMREST GP

1520434A
PR: t05i29k58b0485

CONSOLE GP - 500768D1

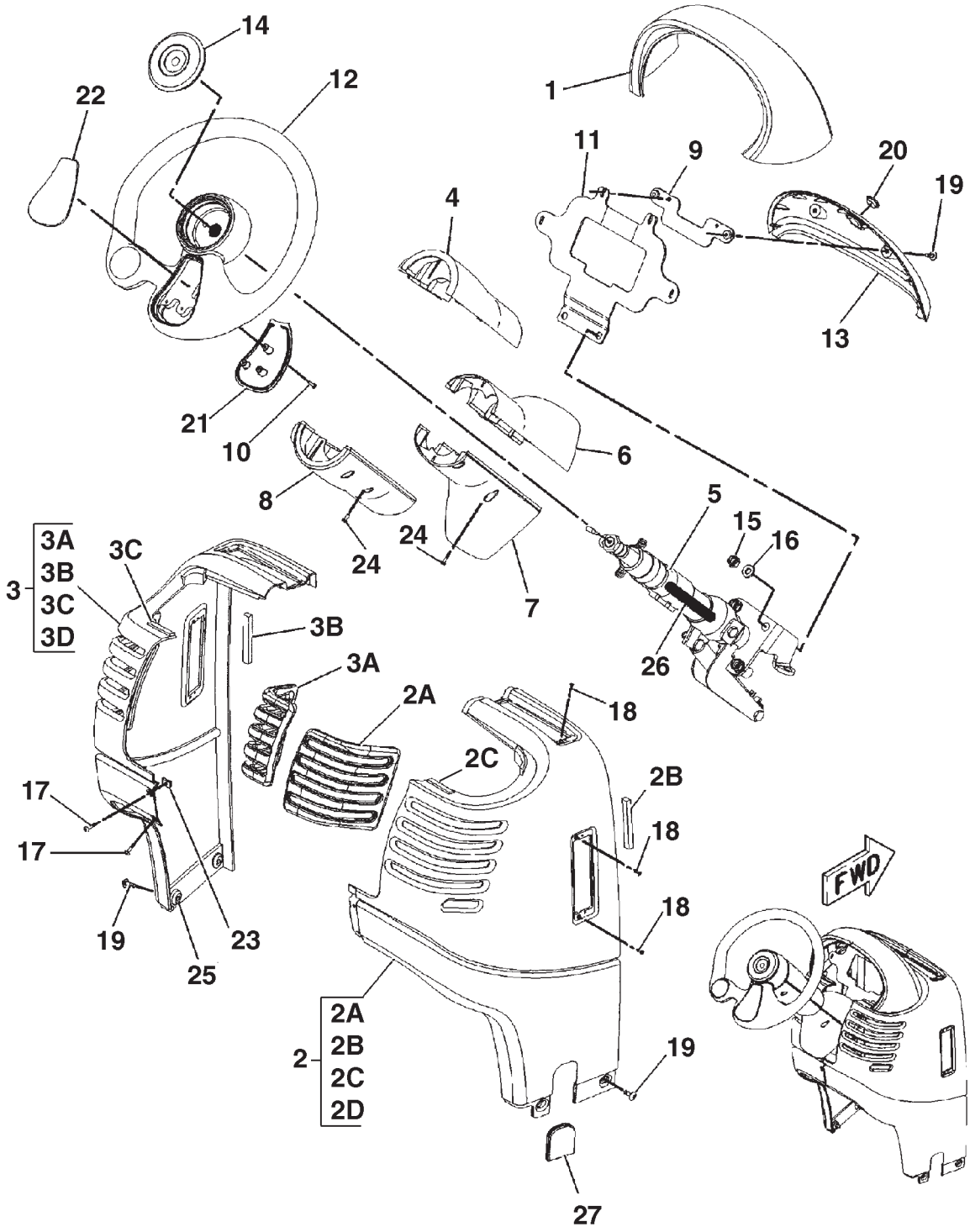

0789409A

CONSOLE GP - 500768D1

ITEM	NUMBER	QTY	DESCRIPTION
-	500768D1	--	CONSOLE GP [A] (NOT SERVICED)
1	CH162-6660	1	COVER AS
2	200-1770	1	CONSOLE ASM-RH (INCLS 2A-2E)
2A		1	CONSOLE-RIGHT (ORDER IT 2)
2B	169-6386	1	SEAL
2C	201-4113	1	BUMPER
2D	201-9789		SEAL
3	200-1771	1	CONSOLE ASM-LH (INCLS 3A-3D)
3A		1	CONSOLE-LEFT (ORDER IT 3)
3B	169-6385	1	SEAL
3C	201-4113	1	BUMPER
3D	201-9789		SEAL
4	164-7044	1	COVER-TOP (UPPER COLUMN)
5	CH166-3611	1	COLUMN AS-STEERING
			(SEE BREAKDOWN FOR COMPONENTS)
6	166-3754	1	COVER-TOP (LOWER COLUMN)
7	166-3755	1	COVER (LOWER COLUMN)
8	166-4555	1	COVER (UPPER COLUMN)
9	192-9017	1	BRACKET ASM(INCLUDES BRACKET AND NUT)
	400313X1	2	NUT-WELD (M6X1)
10	CH186-1682	3	SCREW-PAN HEAD (6-32X0.75 IN)
11	179-8220	1	BRACKET ASM
	CH7T-1099	1	LINK
12	195-5230	1	STEERING WHEEL
13	CH178-7965	1	COVER
14	195-5229	1	BUTTON-HORN
15	CH8T-0389	4	LOCKNUT (M10X1.5)
16	400287X1	4	WASHER-HARD (11X21X2.5)
17	CH9X-1046	2	SCREW (M4X0.7X18MM)
18	CH104-2091	6	SCREW-FLAT HEAD (6-20X0.5 IN)
19	CH9X-2044	6	SCREW-TRUSS HEAD (M6X1X16MM)
20	CH7X-1434	1	PLUG
21	195-5227	1	COVER (REMOTE RADIO CONTROL)
22	195-5228	1	COVER
23	400084X1	1	NUT-RETAINER (M4X0.07X0.6-3.8 PANEL)
24	CH119-5026	8	SCREW-PAN HEAD (10-16X0.63 IN)
25	400085X1	4	NUT-RETAINER (M6X1X1.63-3.8 PANEL)
26	CH191-1780	AR	CONDUIT-FLEXIBLE (14CM)
			(REQUIRED ONLY ON TRACTORS NOT
			EQUIPPED W/REMOTE RADIO CONTROLS)
27	201-4114	1	GROMMET

[A] PART OF 152-0012; 152-0013;
222-4146; 500841D1; 500842D1
CAB AR

0789409A
PR: t05i29k58b0486

COVER GP - 500761D1

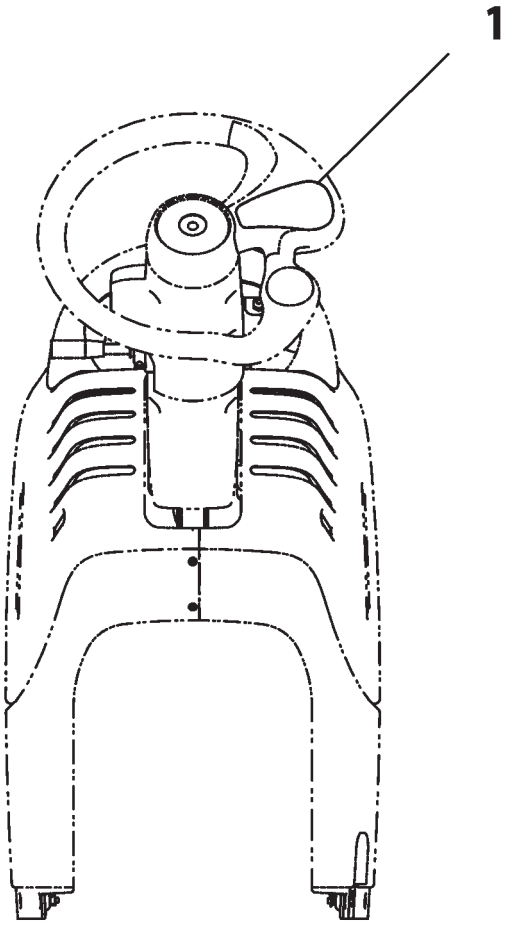

500761DB

COVER GP - 500761D1

ITEM	NUMBER	QTY	DESCRIPTION
-	502796D1	--	COVER GP (NOT SERVICED)
-	500761D1	--	COVER GP [A] (NOT SERVICED)
1	195-5228	1	COVER

[A] PART OF 500841D1; 500842D1 CAB AR;
502796D1 COVER GP

500761DB
PR: t05i29k58b0487

CONTROL GP-AIR & TEMPERATURE
166-4586

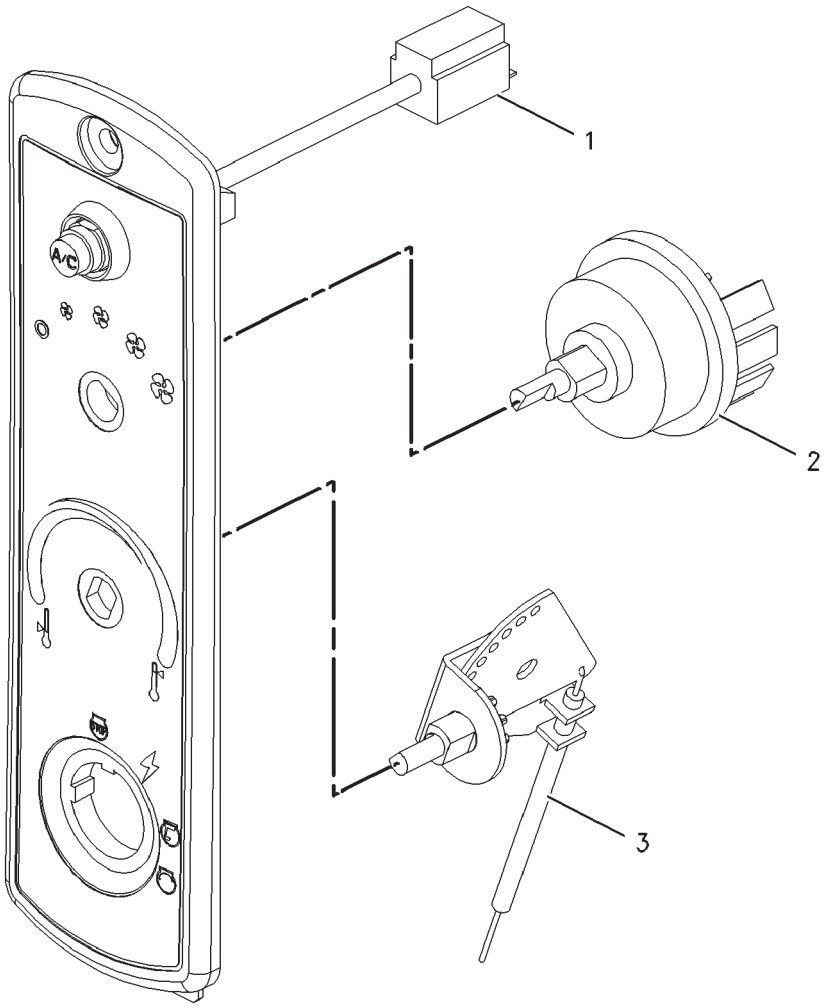

00876899

CONTROL GP-AIR & TEMPERATURE
166-4586

ITEM	NUMBER	QTY	DESCRIPTION
-	166-4586	--	CONTROL GP-AIR & TEMPERATURE [A]
1	CH130-5742	1	SWITCH-AIR CONDITIONER
2	CH157-0217	1	SWITCH ASM-ROTARY (BLOWER FAN SPEED)
	CH6V-8362	6	SCREW-MACHINE (8-32X0.31 IN)
	CH9B-7233	6	LOCKWASHER
3	CH208-6662	1	CABLE (CAB TEMPERATURE CONTROL)

[A] PART OF 151-9986;502502D1
AIR CONDITIONER & MOUNTING GP

00876899
PR: t05i29k58b0488

CONTROL GP-BRAKE & CLUTCH
152-0438

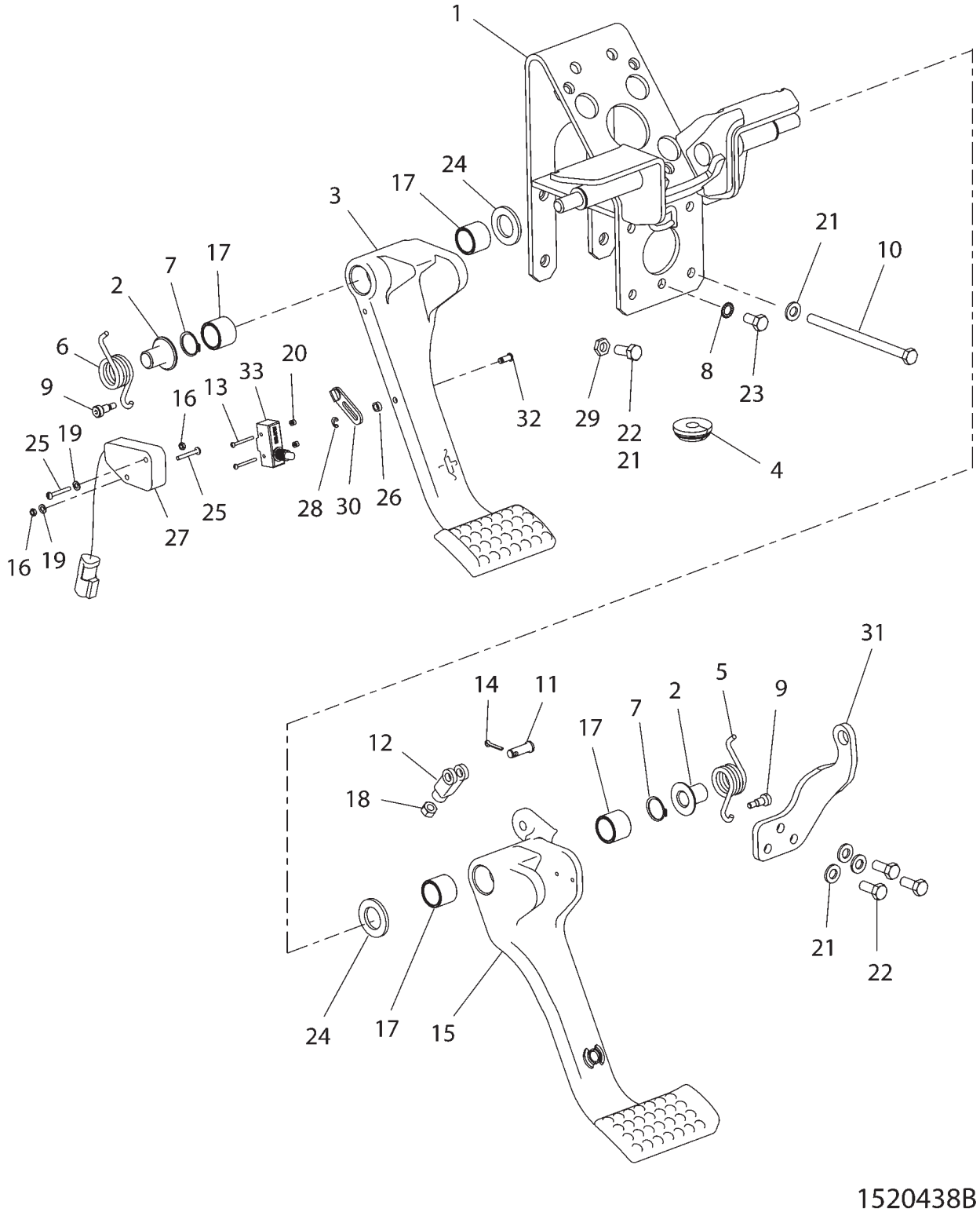

CONTROL GP-BRAKE & CLUTCH
152-0438

ITEM	NUMBER	QTY	DESCRIPTION
-	152-0438	--	CONTROL GP - BRAKE & CLUTCH [A] (NOT SERVICED)
1	500442D1	1	BRACKET AS.
2	CH192-4767	2	BUSHING-PLASTIC 16.3 ID W/LIP
3	501944D1	1	PEDAL-CLUTCH
4	CH212-4443	1	GROMMET-RUB 12.5 IDX32 ODX2.5
5	400120X1	1	SPRING-TORSION LH 81.3NM/TURN
6	400121X1	1	SPRING-TORSION RH 81.3NM/TURN
7	CH001-5600	2	RING-RETAINING EXT 23.5 IDX1.1
8	CH124-7346	1	WASHER-LOCK, EXT T 10.2ID
9	400004X1	2	BOLT-M6X1X23.25MM PL SHDR HSHD
10	400137X1	4	BOLT-M10X1.5X160 ZNDI HHD 10.9
11	CH1B-0676	1	PIN 9.4DIAX29 STL
12	CH1F-5403	1	ROD END-ADJUSTABLE
13	CH216-9085	2	SCREW-M3X0.5X35MM PAN, CROSS
14	CH3B-4615	1	PIN-COTTER 3.18 DIAX19MM STL
15	500378D1	1	PEDAL-BRAKE
16	CH5C-8312	2	NUT-M4X0.7 THD HEX
17	400124X1	4	BRG-SLEEVE BRZ 25.44 IDX25.4LG
18	CH6V-8183	1	NUT-3/8-24 THD FULL
19	CH8T-0328	2	WASHER-HARD 5.5IDX10ODX1MM
20	CH8T-2658	2	NUT-M3X0.5-6H HHD SLF LOCK
21	400287X1	7	WASHER-HARD 11IDX21ODX2.5 ZND1
22	400039X1	4	BOLT-M10X1.5X25 ZNDI HHD 10.9
23	400040X1	1	BOLT-M10X1.5X20 ZNDI HHD 10.9
24	400081X1	2	WASHER-HARD 26IDX44ODX4MM ZNDI
25	CH9X-2606	2	SCREW-PAN M4X0.7X30
26	CH4E-7808	1	SPACER 10 ODX6.6 IDX4
27	500619D1	1	SENSOR-POSITION
28	400553X1	1	E-CLIP 5MM SHAFT
29	400576X1	1	NUT-HEX JAM M10X1.5 THD
30	500450D1	1	BRACKET AS
31	500493D1	1	PLATE
32	500513D1	1	PIN
33	500717D1	1	SWITCH-PUSH BUTTON

[A] PART OF 500841D1;500842D1;500844D1;
500849D1 CAB AR

1520438B
PR: t05i29k58b0489

CONTROL GP-HITCH - 152-0445
REAR 3 POINT

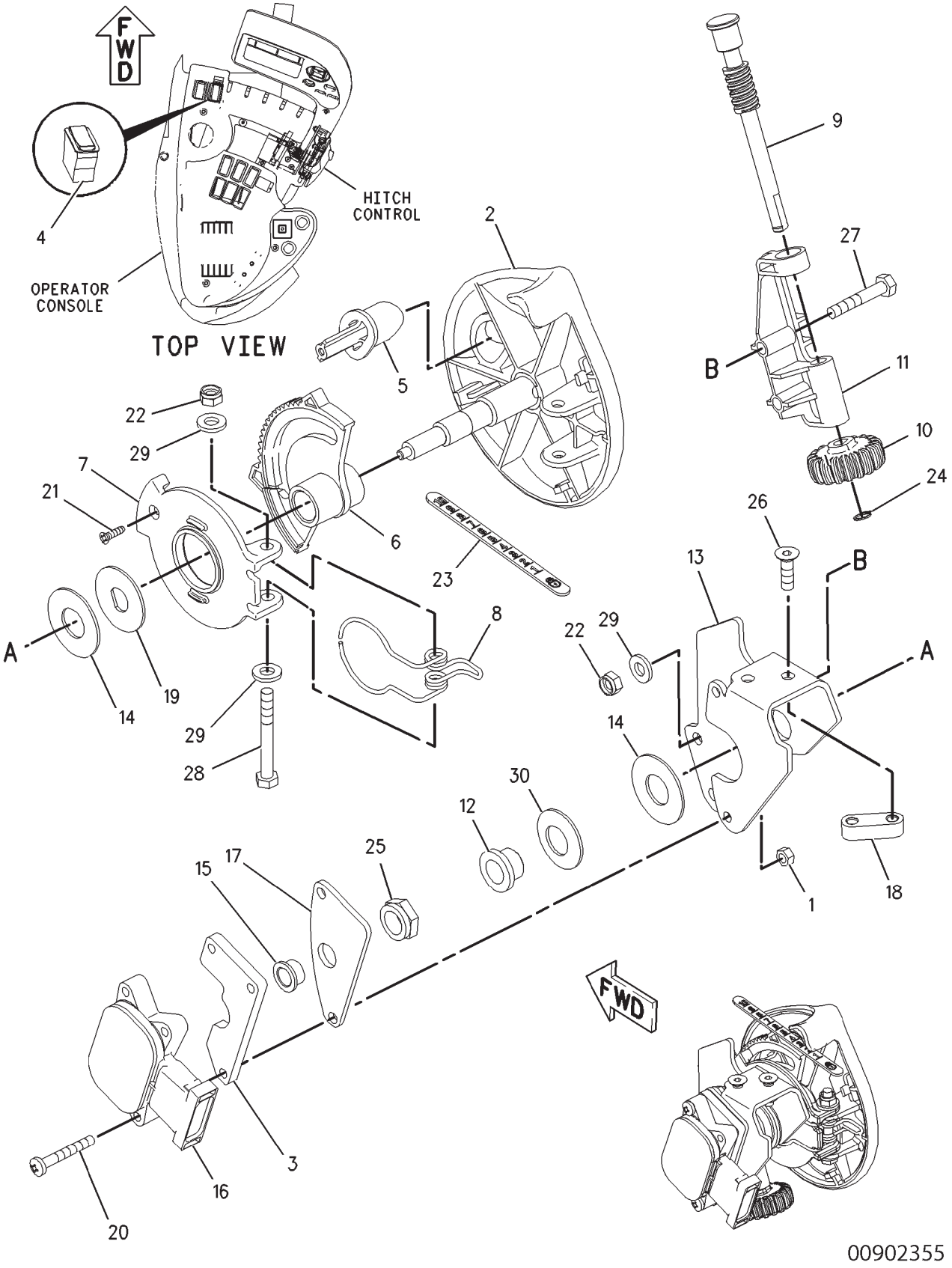

CONTROL GP-HITCH - 152-0445
REAR 3 POINT

ITEM	NUMBER	QTY	DESCRIPTION
-	152-0445	--	CONTROL GP-HITCH [A]
1	CH179-4324	2	LOCKNUT (M5X.8)
2	164-7040	1	HANDLE
3	169-6391	1	SPACER-RUBBER
4	169-8227	1	SWITCH-ROCKER (3 POINT HITCH CONTROL)
5	172-6851	1	BUTTON
6	172-6852	1	GEAR
7	172-6853	1	STOP
8	172-6858	1	SPRING
9	172-6863	1	GEAR
10	172-6864	1	KNOB (HEIGHT ADJ-3 POINT HITCH CONT)
11	172-6865	1	BRACKET
12	CH174-5747	1	BUSHING
13	179-4227	1	BRACKET
14	400334X1	2	WASHER (16.5X37X1.5)
15	CH187-4917	1	BUSHING
16	500382D1	1	SENSOR GP-POSITION
17	CH207-2023	1	PLATE
18	CH207-2024	1	PLATE
19	CH214-2184	1	WASHER
20	400071X1	2	SCREW-MACHINE (M5X0.8X35MM)
21	CH113-0899	1	SCREW-FLAT HEAD (6-20X0.5 IN)
22	CH129-3178	3	LOCKNUT (M6X1)
23	501523D1	1	FILM-INSTRUCTION (3 POINT HITCH)
24	CH3P-3547	1	RING-RETAINING
25	CH4K-8341	1	LOCKNUT (1/2-20)
26	400256X1	2	BOLT-HEX SOCKET (M6X1X20MM)
27	400070X1	2	BOLT (M6X1X35MM)
28	400186X1	1	BOLT (M6X1X50MM)
29	CH8T-4205	4	WASHER-HARD (7.2X14.5X2MM)
30	400074X1	1	WASHER-SPRING

[A] PART OF 169-0027;169-0028;186-0979;
189-3300 HITCH AR-3 POINT

00902355
PR: t05i29k58b0490

CONTROL GP-IMPLEMENT - 4TH HANDLE
136-5355

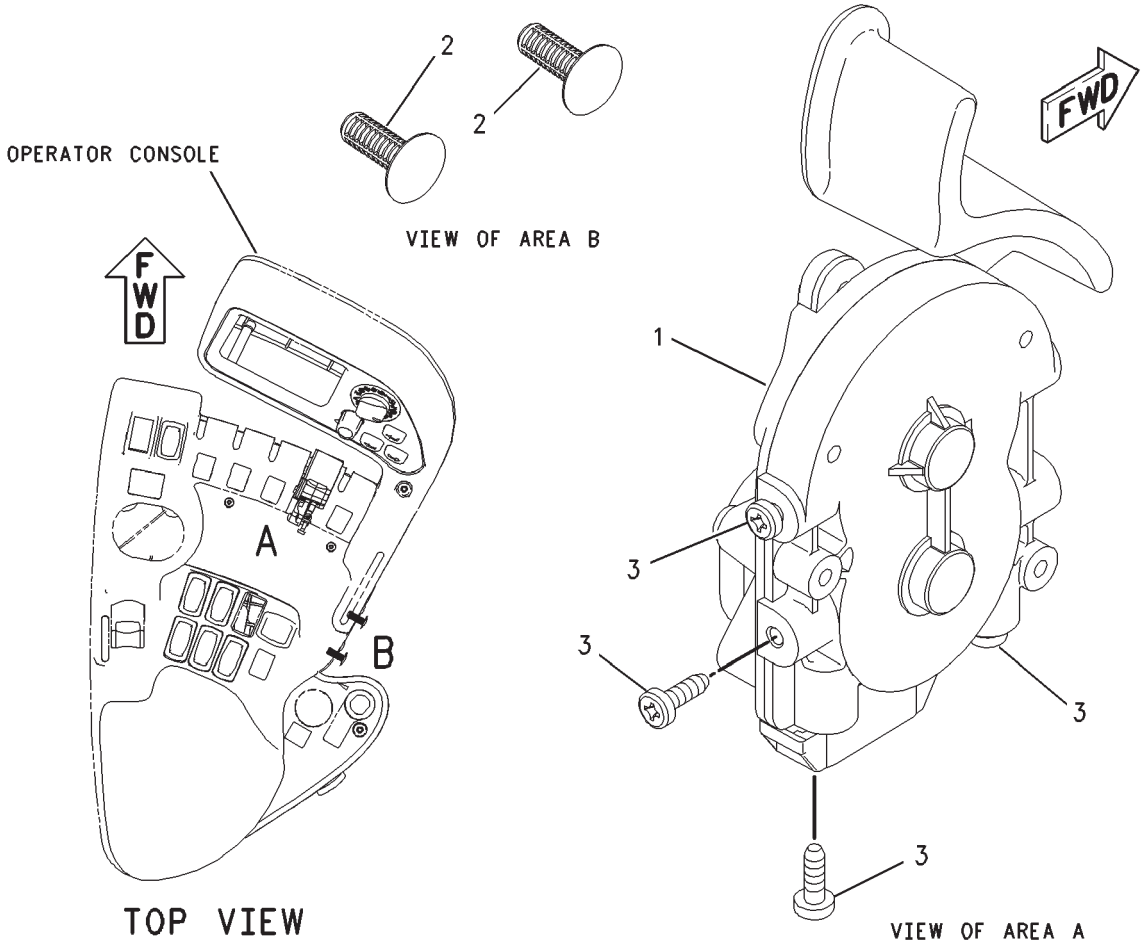

00880990

CONTROL GP-IMPLEMENT - 4TH HANDLE
136-5355

ITEM	NUMBER	QTY	DESCRIPTION
-	136-5355	--	CONTROL GP-IMPLEMENT [A] (NOT SERVICED)
1	209-8704	1	CONTROL GP-IMPLEMENT (SEE BREAKDOWN FOR COMPONENTS)
2	400110X1	2	CLIP
3	400834X1	4	SCREW-TRUSS HEAD (8-16X0.5 IN)

[A] PART OF 185-8699 CONVERSION GP-CONTROL VALVE

00880990
PR: t05i29k58b0491

CONTROL GP-IMPLEMENT - 4 HANDLES
152-0443

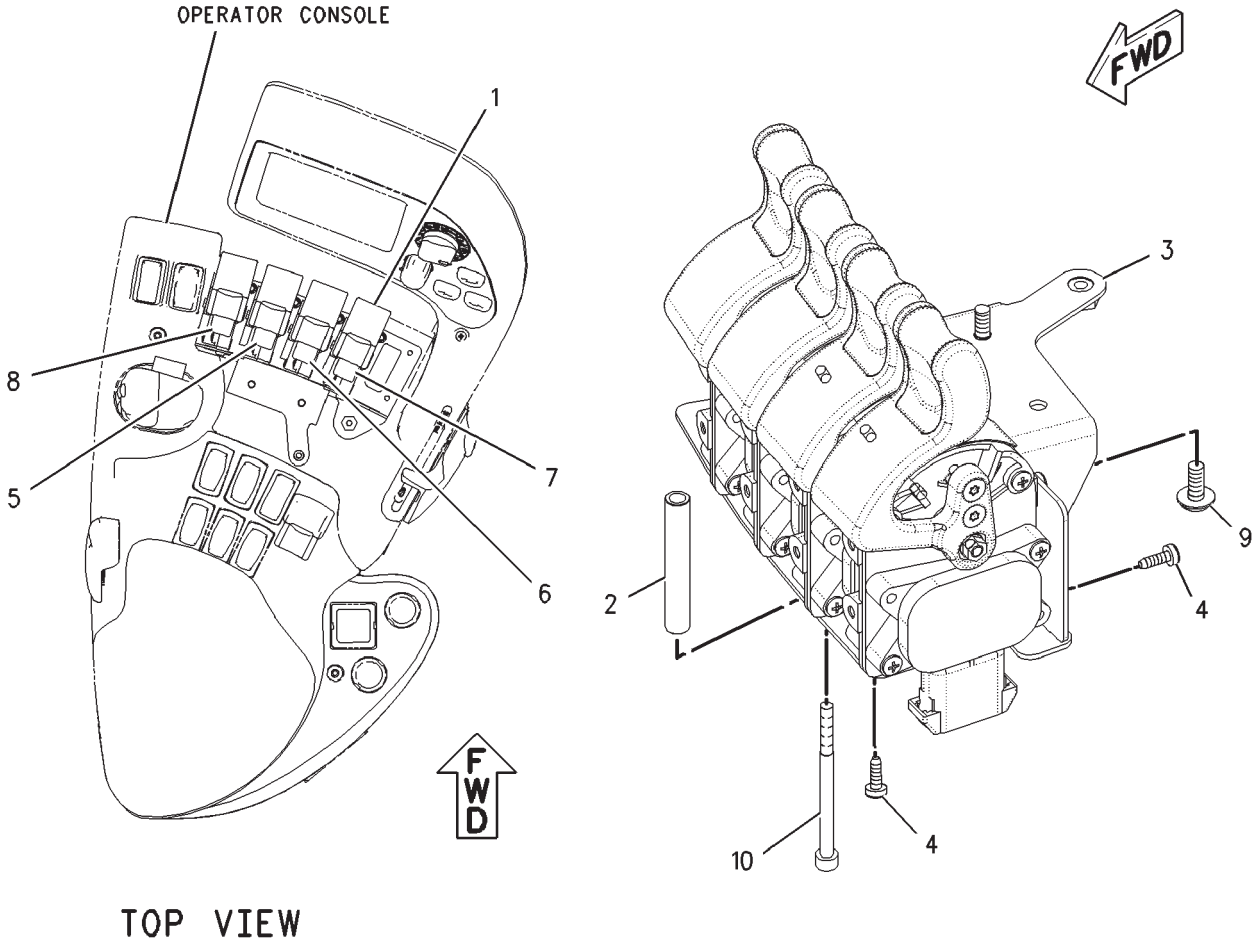

00876314

CONTROL GP-IMPLEMENT - 4 HANDLES
152-0443

ITEM	NUMBER	QTY	DESCRIPTION
-	152-0443	--	CONTROL GP-IMPLEMENT [A] (NOT SERVICED)
1	209-8704	4	CONTROL GP-IMPLEMENT (SEE BREAKDOWN FOR COMPONENTS)
2	CH195-2626	4	SPACER (6.4X9.6X61)
3	169-6362	1	PLATE ASM
4	CH212-3416	16	SCREW-PAN HEAD (8-16X0.5 IN)
5	501526D1	1	FILM (ELECTRO HYDRAULIC LEVER #2)
6	501527D1	1	FILM (ELECTRO HYDRAULIC LEVER #3)
7	501528D1	1	FILM (ELECTRO HYDRAULIC LEVER #4)
8	501525D1	1	FILM (ELECTRO HYDRAULIC LEVER #1)
9	CH207-2021	2	SCREW
10	400254X1	4	BOLT-SOCKET HEAD (M5X.08X70MM)

[A] PART OF:
180-1434 VALVE AR-BANK 4
502051D1 VALVE AR-4 IMPL

00876314
PR: t05i29k58b0492

CONTROL GP-IMPLEMENT - 6TH HANDLE
152-0448

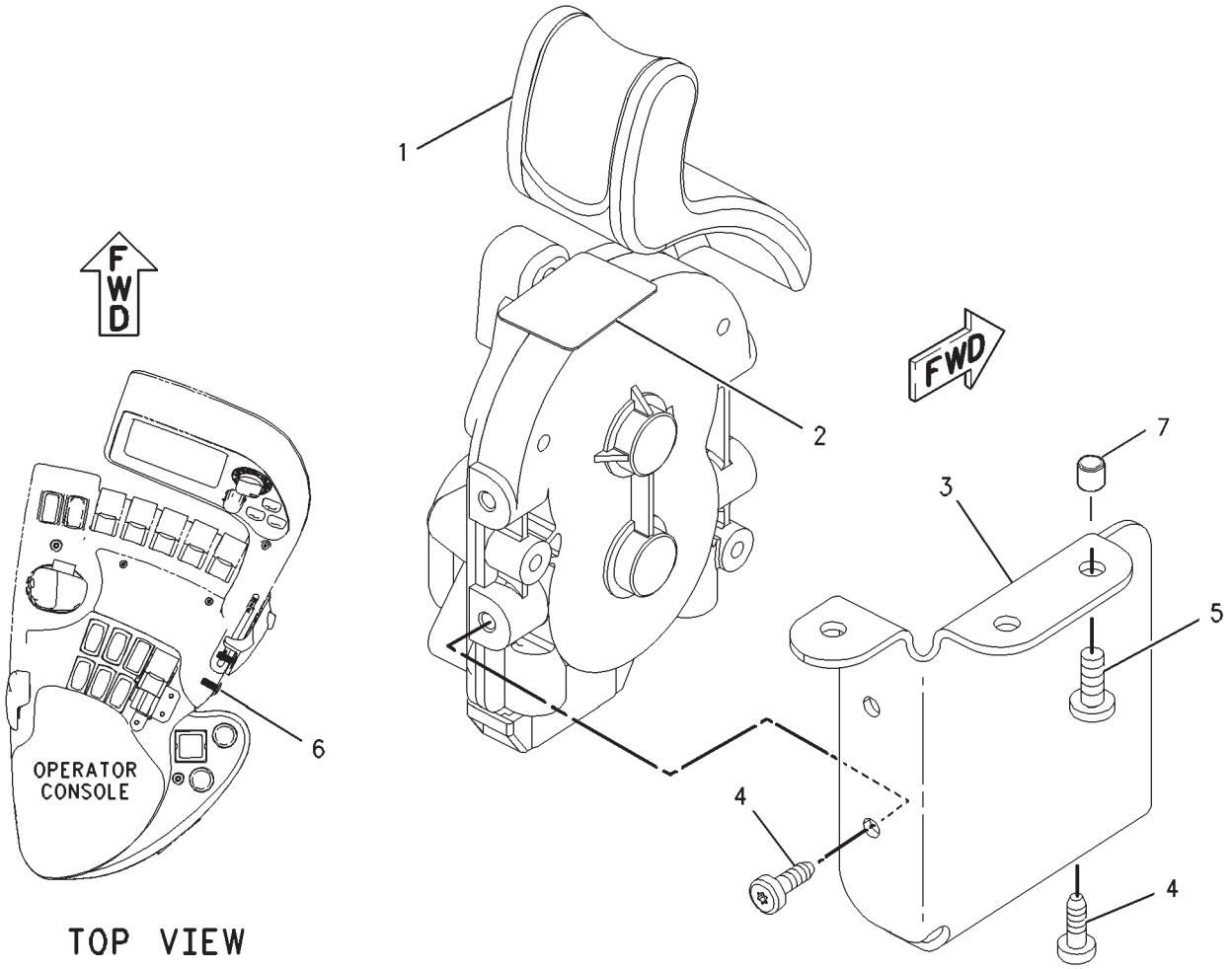

00879185

CONTROL GP-IMPLEMENT - 6TH HANDLE
152-0448

ITEM	NUMBER	QTY	DESCRIPTION
-	152-0448	--	CONTROL GP-IMPLEMENT [A] (NOT SERVICED)
1	209-8704	1	CONTROL GP-IMPLEMENT (SEE BREAKDOWN FOR COMPONENTS)
2	501530D1	1	FILM (ELECTRO HYDRAULIC LEVER)
3	169-6384	1	BRACKET
4	CH212-3416	4	SCREW-PAN HEAD (8-16X0.5 IN)
5	CH6V-9673	3	SCREW-MACHINE (M5X0.8X12MM)
6	400110X1	2	FASTENER
7	CH179-4206	3	INSERT (19/64-24 X M5 X 0.8 ID) (NOT ILLUSTRATED)

[A] PART OF:
185-8701 CONVERSION GP-CONTROL VALVE
500791D2;500792D2;500793D2;500794D2
ARMREST GP

00879185
PR: t05i29k58b0493

CONTROL GP-IMPLEMENT - 5 HANDLES
166-4590

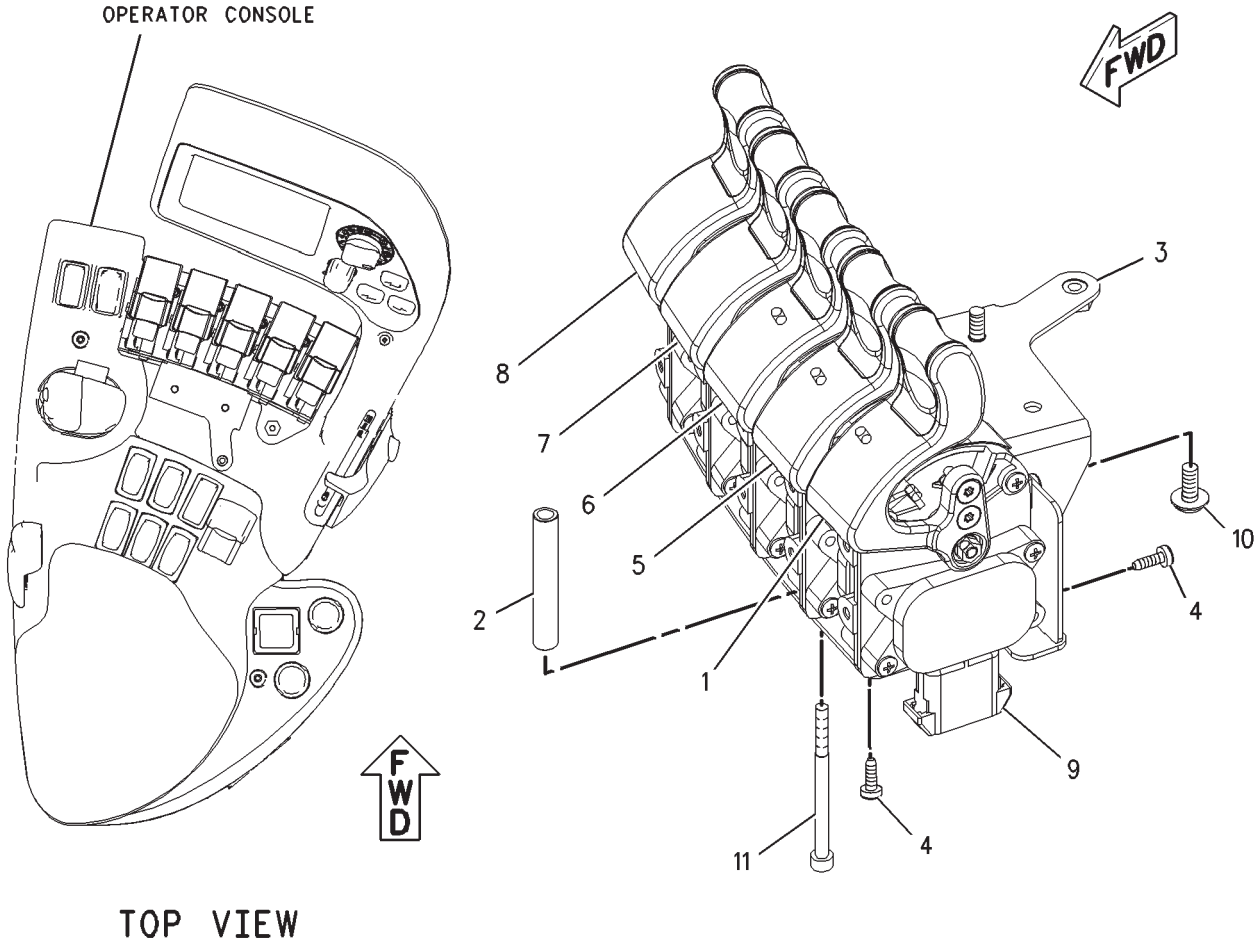

CONTROL GP-IMPLEMENT - 5 HANDLES
166-4590

ITEM	NUMBER	QTY	DESCRIPTION
-	166-4590	--	CONTROL GP-IMPLEMENT [A] (NOT SERVICED)
1	501529D1	1	FILM (ELECTRO HYDRAULIC LEVER)
2	CH195-2626	4	SPACER (6.4X9.6X61)
3	169-6362	1	PLATE ASM
4	CH212-3416	20	SCREW-PAN HEAD (8-16X0.5 IN)
5	501525D1	1	FILM (ELECTRO HYDRAULIC LEVER)
6	501526D1	1	FILM (ELECTRO HYDRAULIC LEVER)
7	501527D1	1	FILM (ELECTRO HYDRAULIC LEVER)
8	501528D1	1	FILM (ELECTRO HYDRAULIC LEVER)
9	209-8704	5	CONTROL GP-IMPLEMENT (SEE BREAKDOWN FOR COMPONENTS)
10	CH207-2021	2	SCREW
11	400254X1	4	BOLT-SOCKET HEAD (M5X.08X70MM)

[A] PART OF:
180-1438 VALVE AR-BANK 5
502052D1 VALVE AR-IMPL
500488D2;500489D2;500490D2;500491D2;
500791D2;500792D2;500793D2;500794D2
ARMREST GP

00884953
PR: t05i29k58b0494

CONTROL GP-IMPLEMENT
209-8704

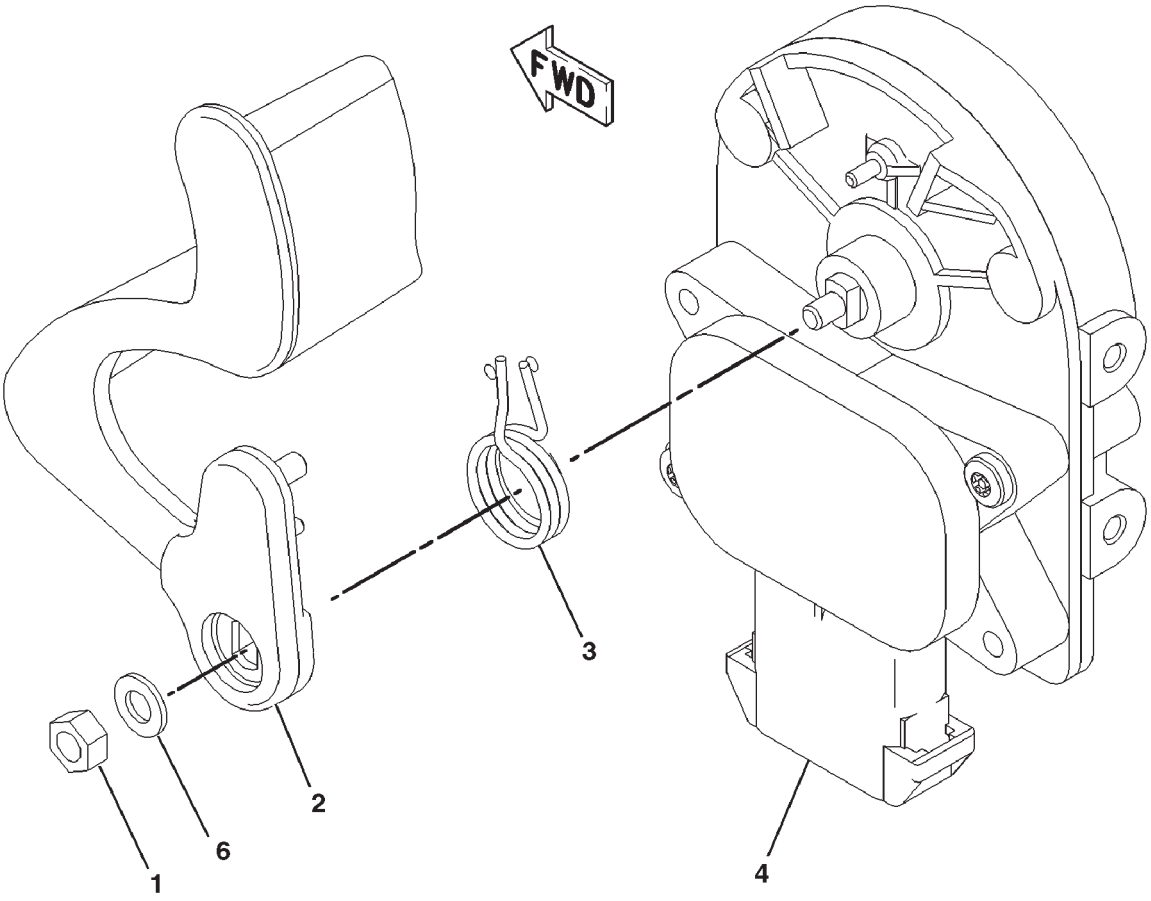

0894755A

CONTROL GP-IMPLEMENT
209-8704

ITEM	NUMBER	QTY	DESCRIPTION
-	209-8704	--	CONTROL GP-IMPLEMENT [A]
1	CH162-6555	1	LOCKNUT (M5X.8)
2		1	HANDLE ASM (NOT SERVICED SEPARATELY)
3	CH206-2491	1	SPRING-TORSION RH
4		1	CONTROL ASM (NOT SERVICED SEPARATELY)
5		--	(NOT USED)
6	CH8T-3016	1	WASHER (5.3X10X1)

[A] PART OF 136-5355;152-0443;152-0448;
166-4590 CONTROL GP-IMPLEMENT

0894755A
PR: t05i29k58b0495

CONTROL GP-TRANSMISSION - 169-6346

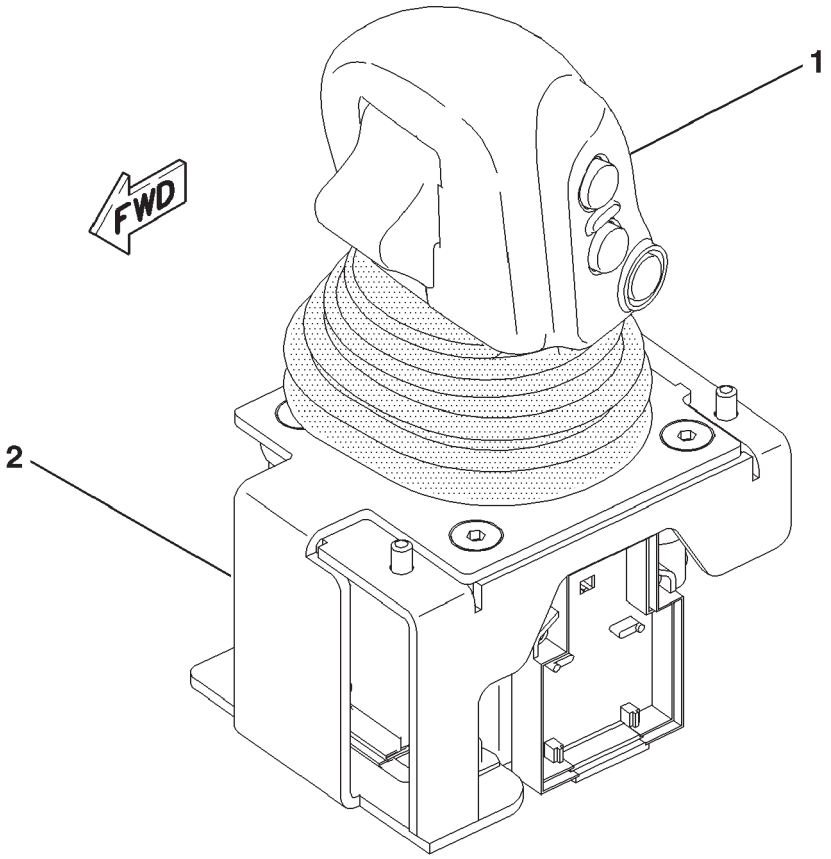

01696346

CONTROL GP-TRANSMISSION - 169-6346

ITEM	NUMBER	QTY	DESCRIPTION
-	169-6346	--	CONTROL GP-TRANSMISSION [A] (NOT SERVICED)
1	169-6347	1	CONTROL GP-TRANSMISSION (NOT SERVICED) (SEE BREAKDOWN FOR COMPONENTS)
2	216-7694	1	CONTROL GP-TRANSMISSION (NO SERVICED COMPONENTS)

[A] PART OF 136-5477; 166-1211
WIRING GP-ARMREST

01696346
PR: t05i29k58b0496

CONTROL GP-TRANSMISSION
169-6347

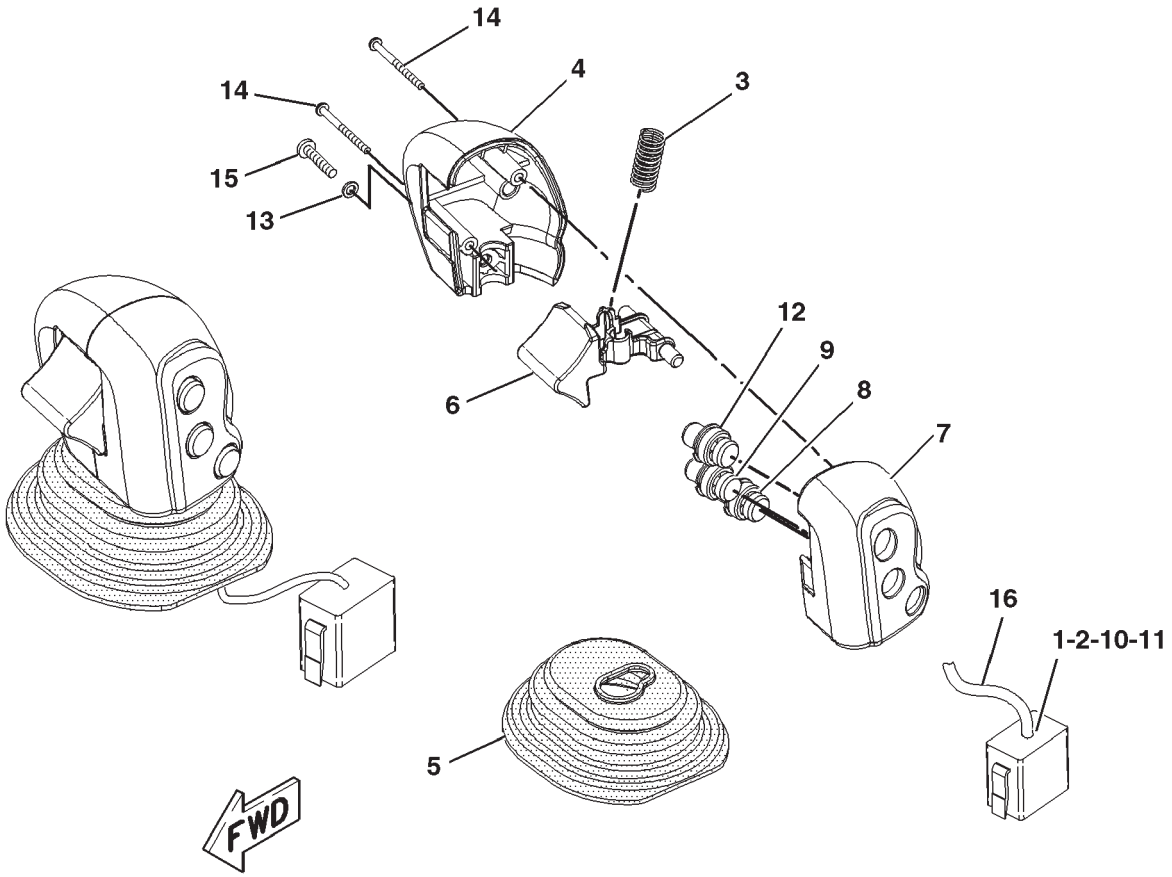

1696347B

CONTROL GP-TRANSMISSION
169-6347

ITEM	NUMBER	QTY	DESCRIPTION
-	169-6347	--	CONTROL GP-TRANSMISSION [A] (NOT SERVICED)
1	400715X1	9	SOCKET-CONNECTOR (16-18AWG)
2	CH9G-3695	3	PLUG (GROMMET SEALING)
3	CH9S-1347	1	SPRING
4	164-7041	1	HANDLE
5	166-4553	1	BOOT
6	168-2334	1	TRIGGER
7	172-6869	1	HANDLE ASM
8	502640D1	1	SWITCH ASM (AUTO SHIFT)
	502122D1	1	CAP-PUSHBUTTON
9	502120D1	1	SWITCH ASM (DOWN SHIFT)
	502122D1	1	CAP-PUSHBUTTON
10	CH155-2258	1	WEDGE-PLUG LOCK (12 PIN)
11	CH155-2255	1	KIT-CONNECTING PLUG (12 PIN) (SERVICED ONLY AS COMPLETE KIT) (INCLUDES WEDGE AND PLUG ASM)
12	502121D1	1	SWITCH ASM (UP SHIFT)
	502122D1	1	CAP-PUSHBUTTON
13	CH3B-4501	1	LOCKWASHER (4.42X7.22X1.02M THK)
14	400073X1	2	BOLT-HEX SCKT
15	CH6V-9492	1	SCREW-MACHINE (M4X0.7X25MM)
16	-----	AR	LOOM (BLACK) (19CM) (NOT SERVICED)

[A] PART OF 169-6346 CONTROL GP-TRANSMISSION

1696347B
PR: t05i29k58b0497

DOOR GP-CAB (LH) - 164-7068

(S/N: PRIOR TO BAM40608; BBP40474; BCC60741; BDS40890)

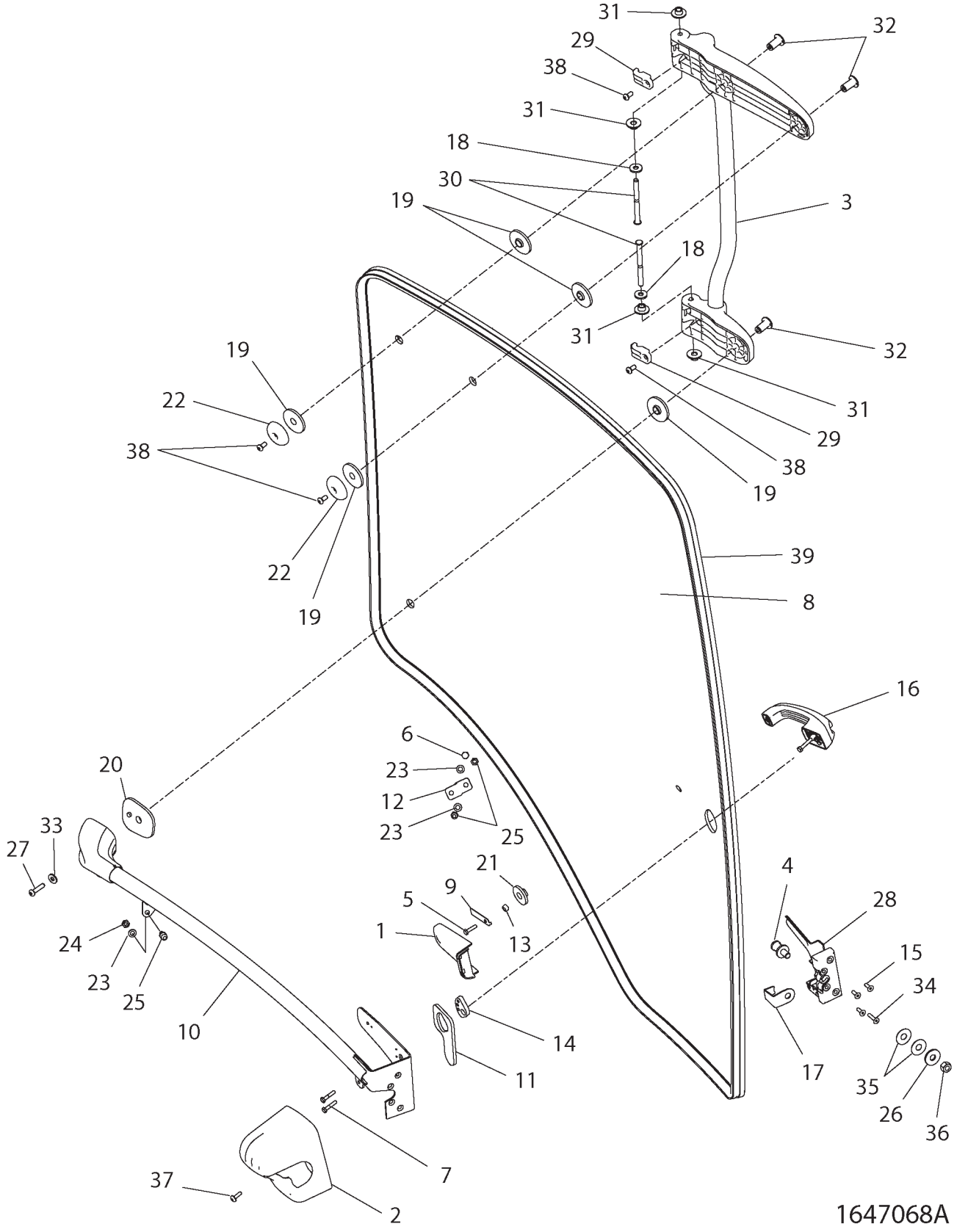

DOOR GP-CAB (LH) - 164-7068

(S/N: PRIOR TO BAM40608; BBP40474; BCC60741; BDS40890)

ITEM	NUMBER	QTY	DESCRIPTION
-	164-7068	--	DOOR GP-CAB [A] (FOR COMPLETE REPLACEMENT, ORDER EFF DOOR GP-CAB)
1	164-7013	1	COVER
2	164-7014	1	COVER-DOOR LATCH (LH)
3	164-7067	1	HINGE AS-DOOR
4	180-6240	1	STRIKER AS.-LONG BODY
5	400022X1	1	BOLT-M6X1X25MM ZNDI HHD 10.9
6	400053X1	1	BOLT-M8X1.25X20 ZNDI HHD 10.9
7	400065X1	2	BOLT-M6X1X30MM ZNDI HHD 10.9
8	151-9983	1	GLASS
9	179-4219	1	CLIP-COVER
10	501028D1	1	TUBE AS
11	164-7054	1	WASHER (DOOR LATCH)
12	500957D1	1	BRACKET
13	500929D1	1	GASKET
14	502011D1	1	BUSHING-DOOR
15	400256X1	3	BOLT-M6X1X20MM PL FLSHD 12.9
16	500658D1	1	HANDLE AS
	CH5P-8500	1	KEY
17	123-0380	1	GUARD - STRIKER
18	500624D1	2	WASHER-M10 NYLON
19	400330X1	5	WASHER 15 ID W/LID
20	400331X1	1	WASHER - DOOR
21	400332X1	1	WASHER (DOOR HANDLE)
22	400333X1	2	WASHER - HINGE
23	400339X1	3	WASHER - HARD
24	400340X1	2	NUT-M8X1.25X13 HEX ZND1
25	CH090-9554	2	STUD-BALL
26	CH140-5181	1	WASHER-13IDX35ODX3.2MM
27	CH142-2304	1	SCREW-BTN HD M8X1.25X35 ZNDI
28	CH164-7057	1	LATCH AS.-LH
29	CH164-7070	2	CLAMP
30	CH166-4573	2	PIN-HINGE (DOOR)
31	CH166-4574	4	BUSHING-HINGE (DOOR)
32	CH169-6392	3	BOSS
33	CH3E-4352	1	WASHER-HARD 8.8IDX20.5ODX2.5MM
34	CH8C-6802	1	SCREW-FLHD M6X1X30 HHD 12.9
35	CH8T-0318	2	SHIM-35 ODX13.5 IDX0.8 ZN
36	CH8T-4244	1	NUT-M12X1.75 HEX ZN
37	CH9X-2045	1	SCREW-M6X1X20MM ORG TORX T30
38	CH9X-2616	4	SCREW-BTNHD M8X1.25X16 ORG12.9
39	CH208-2404	AR	SEAL - BULK (520 CM)

[A] PART OF: 152-0001;152-0002 CAB GP

1647068A
PR: t05i29k58b0498

DOOR GP-CAB (LH) - 500927D1

(S/N: EFF BAM40608; BBP40474; BCC60741; BDS40890)

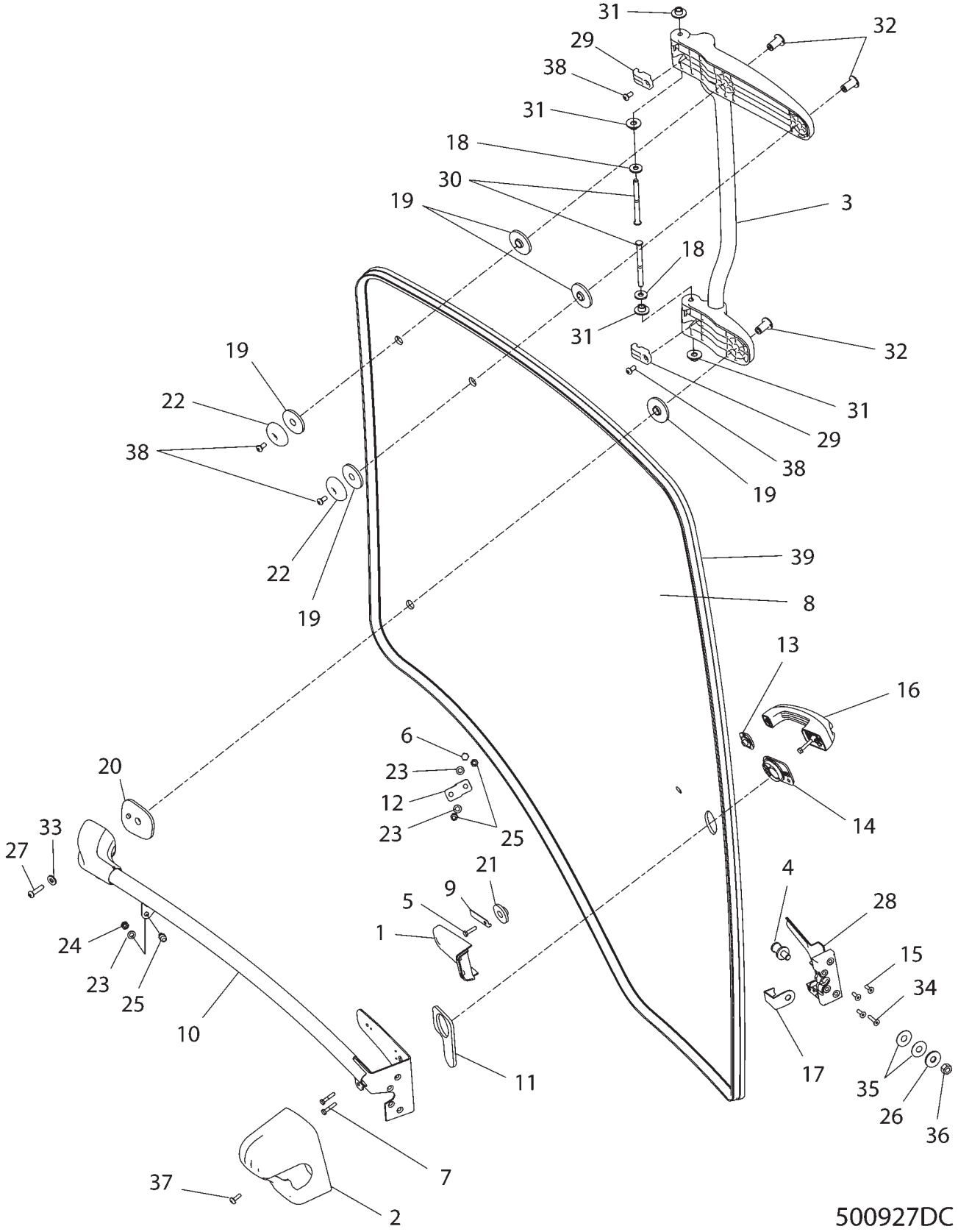

DOOR GP-CAB (LH) - 500927D1

(S/N: EFF BAM40608; BBP40474; BCC60741; BDS40890)

ITEM	NUMBER	QTY	DESCRIPTION
-	500927D1	--	DOOR GP-CAB [A] (NOT SERVICED)
1	164-7013	1	COVER
2	164-7014	1	COVER-DOOR LATCH (LH)
3	164-7067	1	HINGE AS-DOOR
4	180-6240	1	STRIKER AS.-LONG BODY
5	400022X1	1	BOLT-M6X1X25MM ZNDI HHD 10.9
6	400053X1	1	BOLT-M8X1.25X20 ZNDI HHD 10.9
7	400065X1	2	BOLT-M6X1X30MM ZNDI HHD 10.9
8	500625D1	1	GLASS
9	500660D1	1	CLIP
10	500931D1	1	TUBE AS
11	502010D1	1	WASHER
12	500957D1	1	BRACKET
13	500929D1	1	GASKET
14	502011D1	1	GASKET
15	400256X1	3	BOLT-M6X1X20MM PL FLSHD 12.9
16	500658D1	1	HANDLE AS
	CH5P-8500	1	KEY
17	123-0380	1	GUARD-STRIKER
18	500624D1	2	WASHER-M10 NYLON
19	400330X1	5	WASHER 15 ID W/LID
20	400331X1	1	WASHER-DOOR
21	400332X1	1	WASHER (DOOR HANDLE)
22	400333X1	2	WASHER-HINGE
23	400339X1	3	WASHER-HARD
24	400340X1	2	NUT-M8X1.25X13 HEX ZND1
25	CH090-9554	2	STUD-BALL
26	CH140-5181	1	WASHER-13IDX35ODX3.2MM
27	CH142-2304	1	SCREW-BTN HD M8X1.25X35 ZNDI
28	CH164-7057	1	LATCH AS.-LH
29	CH164-7070	2	CLAMP
30	CH166-4573	2	PIN-HINGE (DOOR)
31	CH166-4574	4	BUSHING-HINGE (DOOR)
32	CH169-6392	3	BOSS
33	CH3E-4352	1	WASHER-HARD 8.8IDX20.5ODX2.5MM
34	CH8C-6802	1	SCREW-FLHD M6X1X30 HHD 12.9
35	CH8T-0318	2	SHIM-35 ODX13.5 IDX0.8 ZN
36	CH8T-4244	1	NUT-M12X1.75 HEX ZN
37	CH9X-2045	1	SCREW-M6X1X20 MM ORG TORX T30
38	CH9X-2616	4	SCREW-BTNHD M8X1.25X16 ORG12.9
39	CH208-2404	AR	SEAL-BULK (520 CM)

[A] PART OF: 152-0001;152-0002
152-0003;152-0004 CAB GP

500927DC
PR: t05i29k58b0499

DUCT GP-CAB AIR
166-4556

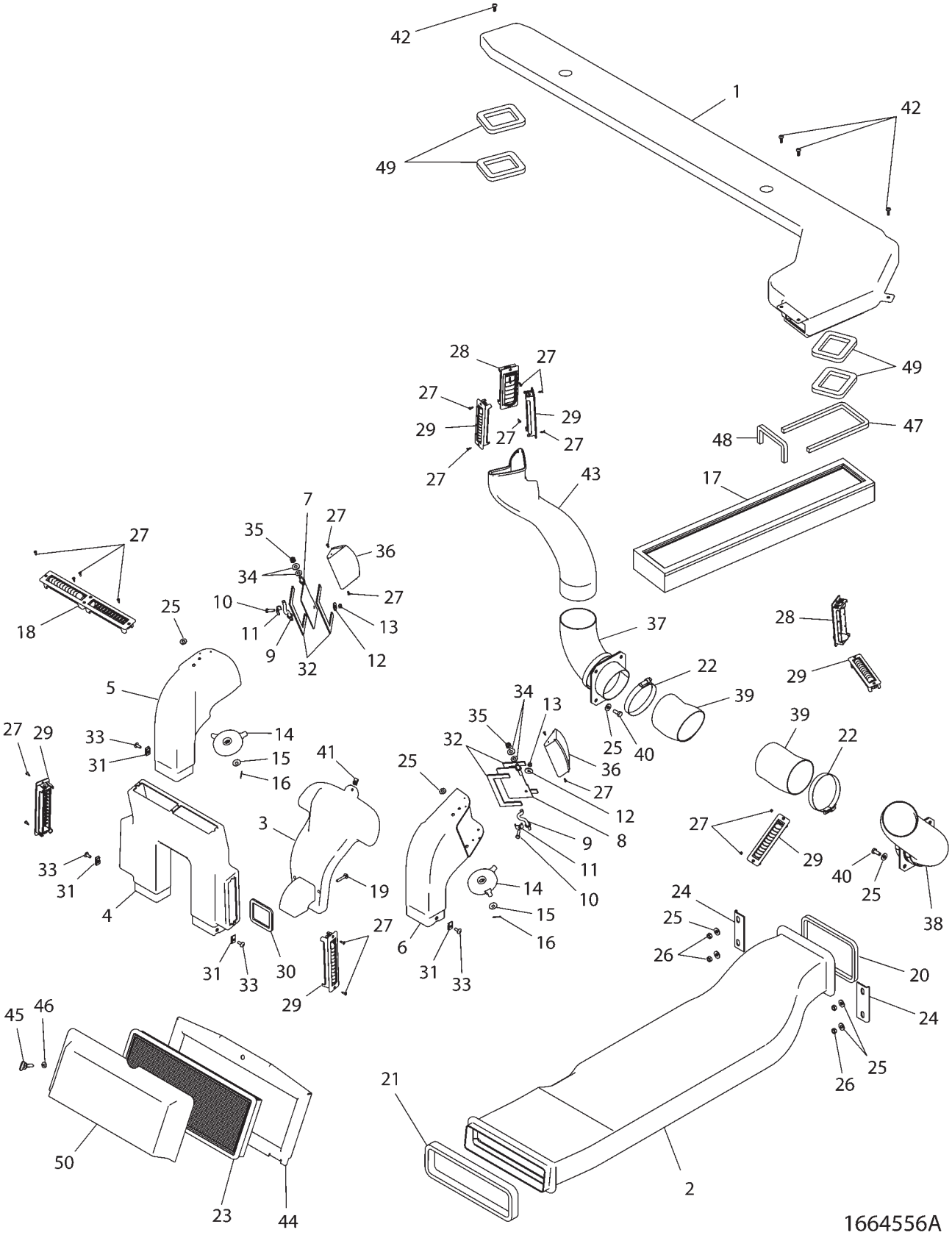

DUCT GP-CAB AIR
166-4556

ITEM	NUMBER	QTY	DESCRIPTION
-	166-4556	--	FILTER GP-CAB AIR [A] (NOT SERVICED)
1	162-6691	1	DUCT-ROOF
2	166-4617	1	DUCT-CENTER
3	169-6337	1	DUCT-FRONT (LOWER)
4	504445D1	1	DUCT-FRONT (DEFROST)
5	164-7023	1	DUCT-RH
6	166-4595	1	DUCT-LH
7	179-4221	1	BRACKET ASM-LH
8	179-4223	1	BRACKET ASM-RH
9	179-4225	2	ROD ASM
10	400221X1	2	BOLT (M6X1X20MM)
11	214-4667	2	PLATE
12	CH117-8929	2	WASHER-HARD (6.6IDX22ODX2)
13	400300X1	2	NUT (M6X1)
14	162-6734	2	WHEEL
15	CH9T-2281	2	SPRING
16	CH3B-4605	2	PIN-COTTER
17	501881D1	1	FILTER-AIR (CAB-OUTSIDE)
18	CH164-8478	1	LOUVER ASM
19	CH9X-2046	2	SCREW-TRUSS HEAD (M6X1X35MM)
20	178-7974	1	GASKET
21	501210D1	1	GASKET
22	400127X1	6	CLAMP-HOSE
23	501153D1	1	FILTER-AIR (CAB-RECIRCULATION)
24	169-6373	2	CLAMP-CENTER DUCT
25	400599X1	14	WASHER-HARD (8.8X20.5X2)
26	400340X1	4	NUT (M8X1.25)
27	CH104-2091	26	SCREW-FLAT HEAD (6-20X0.5 IN)
28	501826D1	3	LOUVER ASM
29	CH171-4047	6	LOUVER ASM
30	187-4906	1	GASKET
31	400085X1	4	NUT (U-TYPE RETAINER)
32	187-4921	4	SEAL
33	CH9X-2044	4	SCREW-TRUSS HEAD (M6X1X16MM)
34	214-1118	4	SPACER (8.4X18X2)
35	CH131-3540	2	LOCKNUT
36	197-3083	2	PLATE
37	201-1186	1	ADAPTER ASM-RH
	210-3258	1	ADAPTER-CONDITIONER
	210-3292	1	GASKET
38	203-6965	1	ADAPTER ASM-LH
	210-3258	1	ADAPTER-CONDITIONER
	210-3292	1	GASKET
39	203-6966	2	HOSE
40	400053X1	8	BOLT (M8X1.25X20MM)
41	400084X1	1	NUT (U-TYPE RETAINER)
42	CH210-4352	4	SCREW-PAN HEAD
43	180-5239	1	DUCT-RH
44	202-0848	1	COVER
45	CH216-9165	1	THUMBSCREW
46	CH2R-2376	1	WASHER (7X16X.8)
47	217-3513	1	SEAL
48	217-3514	1	SEAL
49	222-4774	4	GASKET
50	225-1406	1	COVER-FILTER

[A] PART OF 151-9986; 166-4592; 502501D1
AIR CONDITIONER & MOUNTING GP

1664556A
PR: t05i29k58b0500

HEADLINER GP - 152-0418
OPERATOR COMPARTMENT

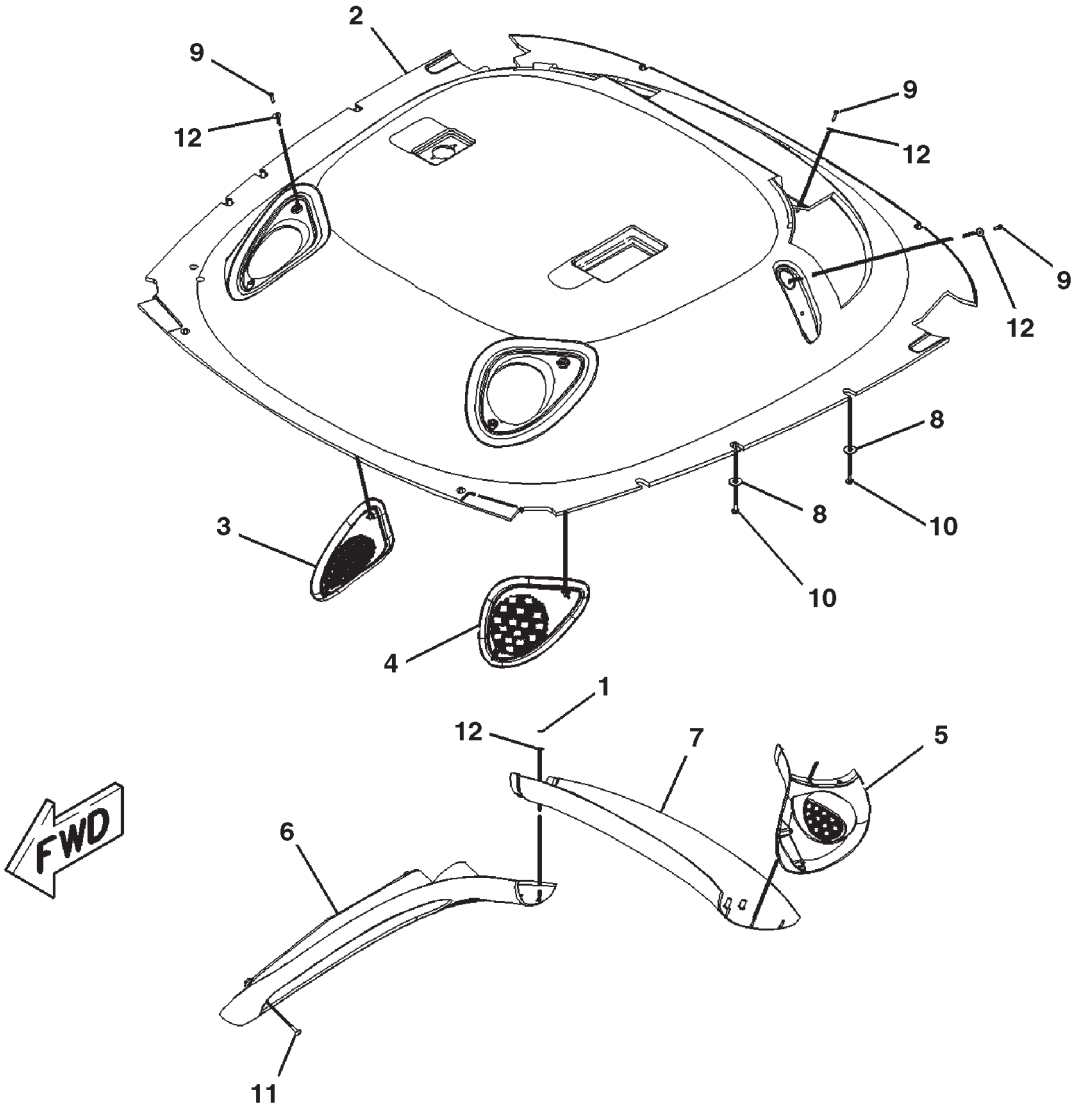

0842870A

HEADLINER GP - 152-0418
OPERATOR COMPARTMENT

ITEM	NUMBER	QTY	DESCRIPTION
-	152-0418	--	HEADLINER GP [A] (NOT SERVICED)
1	CH4V-2264	5	NUT-PUSH
2	162-6687	1	HEADLINER
3	162-6688	1	COVER-FRONT SPEAKER (RH)
4	162-6689	1	COVER-FRONT SPEAKER (LH)
5	162-6690	1	COVER-REAR SPEAKER (LH)
6	162-6692	1	BEZEL
7	168-2305	1	COVER-REAR
8	CH101-2867	10	WASHER-HARD (8.8X25.5X2M THK)
9	CH119-5026	10	SCREW-PAN HEAD (10-16X0.63 IN)
10	CH9X-2044	10	SCREW-TRUSS HEAD (M6X1X16MM)
11	CH9X-2045	4	SCREW-TRUSS HEAD (M6X1X20MM)
12	400076X1	15	WASHER (5X16X1.2)

[A] PART OF 152-0012; 152-0013;
222-4146; 500841D1 CAB AR

0842870A
PR: t05i29k58b0501

LINES GP-A/C - 172-5343

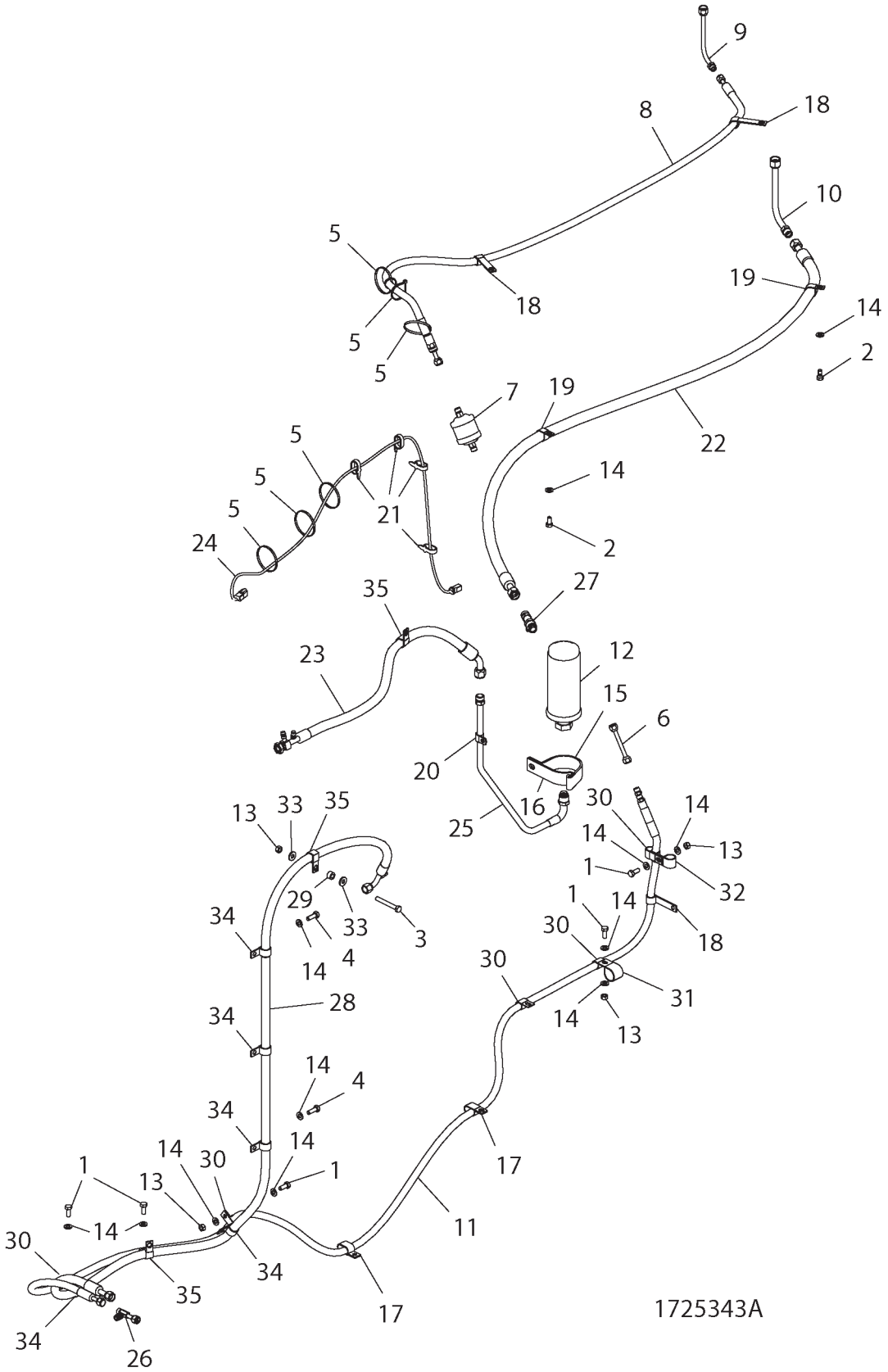

LINES GP-A/C - 172-5343

ITEM	NUMBER	QTY	DESCRIPTION
-	172-5343	--	LINES GP-A/C [A] (NOT SERVICED)
1	400039X1	5	BOLT-M10X1.5X25 ZNDI HHD 10.9
2	400040X1	2	BOLT-M10X1.5X20 ZNDI HHD 10.9
3	400044X1	1	BOLT-M10X1.5X80 ZNDI HHD 10.9
4	400058X1	2	BOLT-M10X1.5X30 ZNDI HHD 10.9
5	CH7K-1181	6	STRAP-CABLE 0.19-4.00
6	500973D1	1	ADAPTER-A/C
7	500978D1	1	FILTER-A/C
8	195-4507	1	HOSE AS
9	195-4512	1	TUBE AS
	CH9X-7381	1	SEAL-O-RING
10	195-4513	1	TUBE AS
	CH9X-7382	1	SEAL-O-RING
11	221-1775	1	HOSE AS
12	500758D1	1	ACCUMULATOR DRYER-A/C
13	WR522218	4	NUT-M10-1.5,CL10.9,ZN,H,REG
14	400287X1	12	WASHER-HARD 11IDX21ODX2.5 ZND1
15	400603X1	1	CLIP-2 PIECE BOTTOM 88.9 OD
16	400604X1	1	CLIP-2 PIECE TOP 88.9 OD
17	400665X1	2	CLIP-LOOP 19ID X 2
18	400695X1	3	CLIP-LOOP 20.64ID
19	400700X1	2	CLIP-LOOP 28.58ID
20	400702X1	1	CLIP-ONE TUBE COATED
21	400837X1	5	STRAP-CABLE (PLASTIC)
22	500990D1	1	HOSE AS. (FOR 15.9 ID SAE)
23	502041D1	1	HOSE AS. (FOR 12.7 ID SAE)
24	502042D1	1	HARNESS AS.-JUMPER
25	502043D1	1	TUBE AS.-A/C
26	502044D1	1	FITTING-A/C
27	502045D1	1	ADAPTER-A/C
28	502338D1	1	HOSE AS.
	CH9X-7381	2	SEAL-O-RING
	CH9X-7378	1	SEAL-O-RING (8.92IDX1.83DIA)
29	CH114-5785	1	SPACER 10.5IDX19ODX11.5 ZN
30	CH3S-8664	6	CLIP-LOOP 19.05 ID
31	CH4D-7388	1	CLIP-LOOP 34.9 ID
32	CH4S-1962	1	CLIP-LOOP 25.4 ID
33	CH7X-7729	2	WASHER-11IDX5ODX3MM
34	CH8S-0948	3	CLIP-LOOP-20.64 ID
35	CH9X-8250	4	CLIP-LOOP 23.8 ID

[A] PART OF 172-5361;172-5362;172-5363;
172-5364;187-1741;187-1742;187-1743;
187-1744 INSTALLATION AR-ENGINE

1725343A
PR: t05i29k58b0502

LINES GP-HEATER - 208-2880

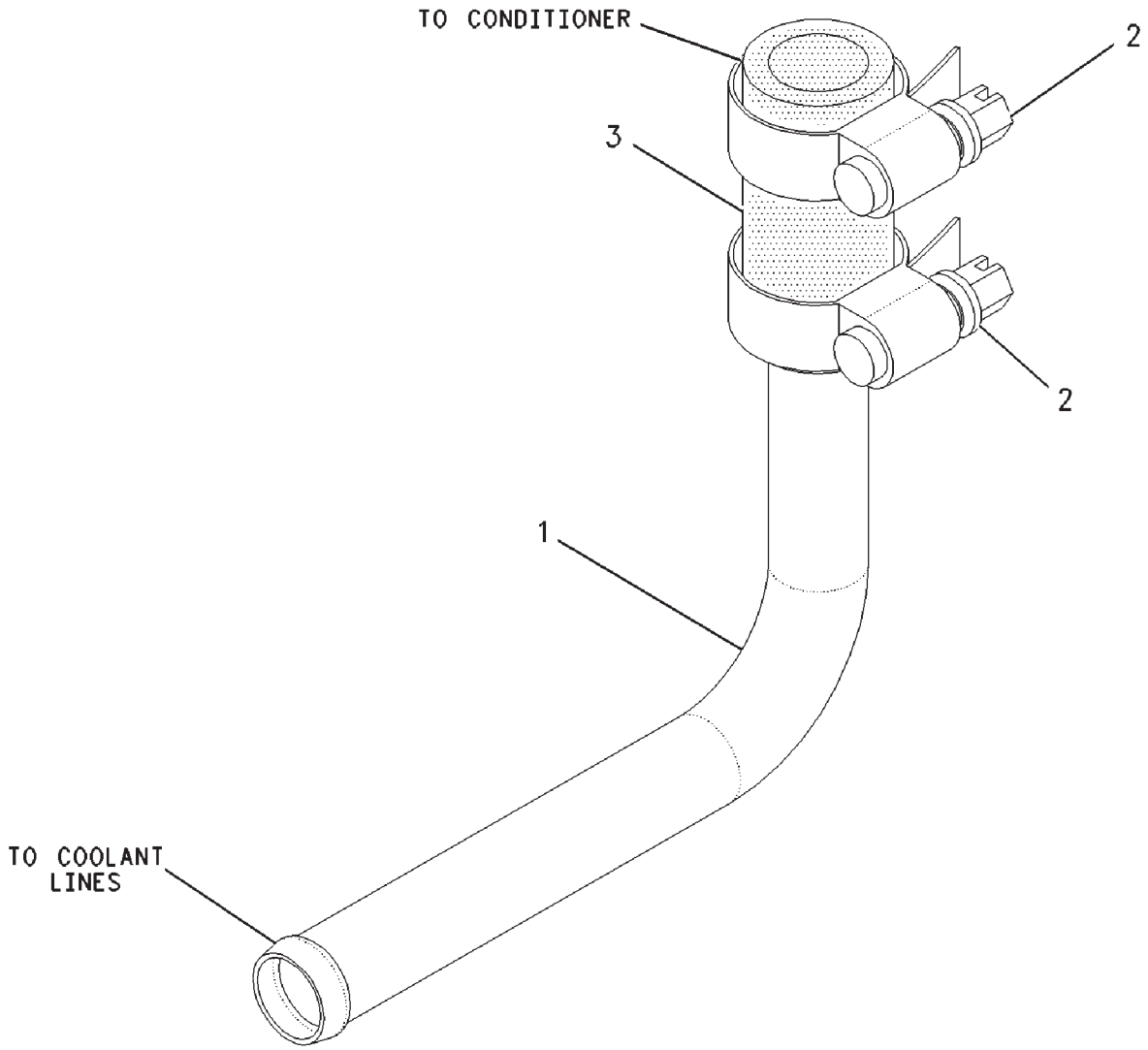

00893577

LINES GP-HEATER - 208-2880

ITEM	NUMBER	QTY	DESCRIPTION
-	208-2880	--	LINES GP-HEATER [A] (NOT SERVICED)
1	CH208-2878	1	ELBOW
2	400108X1	2	CLAMP-HOSE
3	CH5P-0767	AR	HOSE (5 CM)

[A] PART OF 152-0009; 152-0013;
500764D1; 500842D1; 500844D1
CAB AR

00893577
PR: t05i29k58b0503

LINES GP-HEATER - DELUXE
208-2881

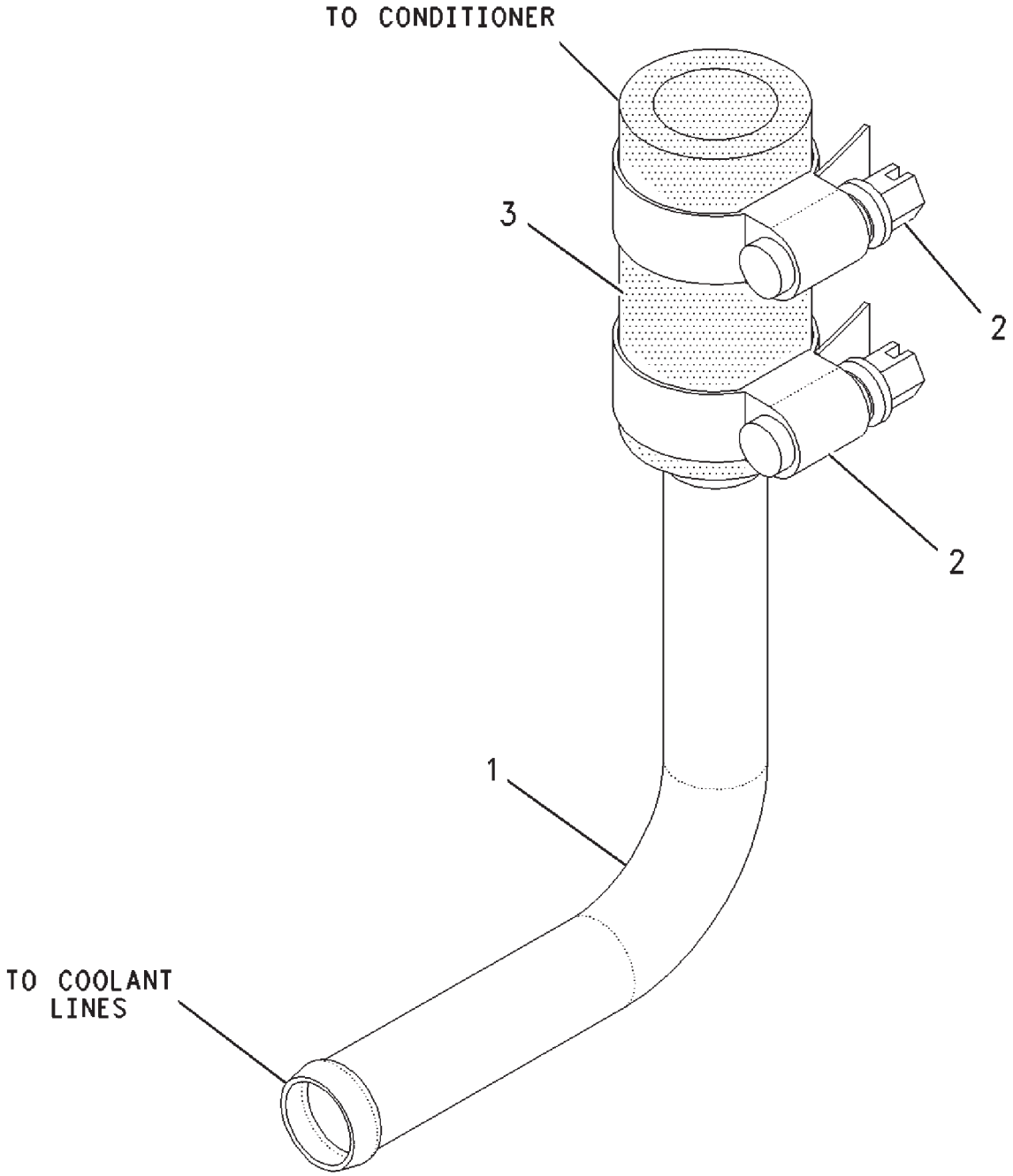

00893020

LINES GP-HEATER - DELUXE
208-2881

ITEM	NUMBER	QTY	DESCRIPTION
-	208-2881	--	LINE GP-HEATER [A] (NOT SERVICED)
1	195-4520	1	TUBE
2	400125X1	2	CLAMP-HOSE
3	501738D1	AR	HOSE (6CM)

[A] PART OF 500841D1;500843D1;500849D1
CAB AR

00893020
PR: t05i29k58b0504

MIRROR GP-REAR VIEW - 209-5607
MANUAL ADJUSTMENT

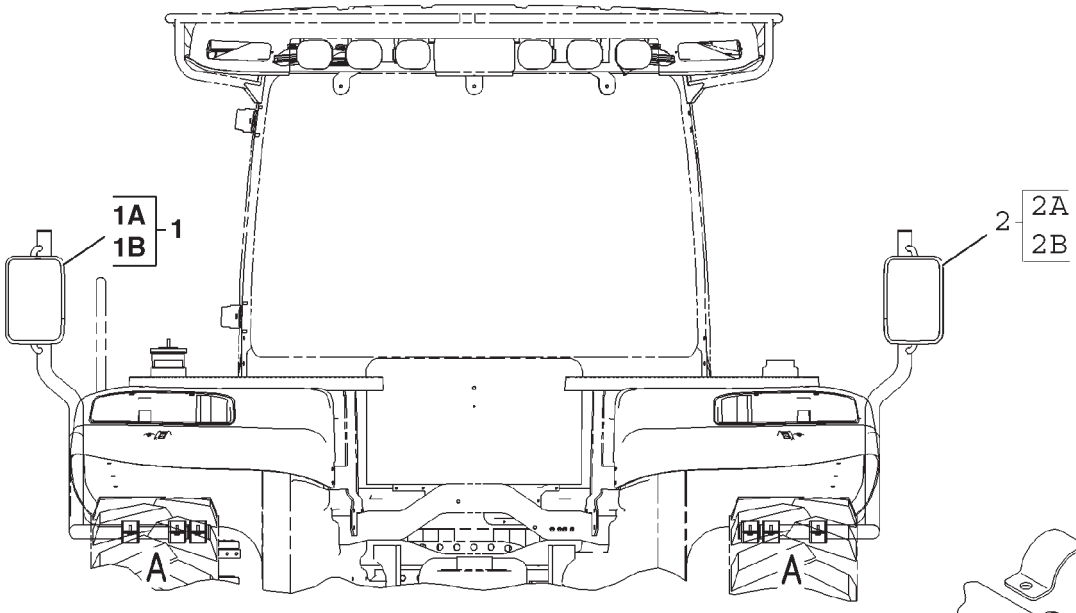

REAR VIEW

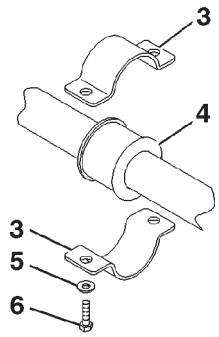

VIEW OF AREA A

0852423B

MIRROR GP-REAR VIEW - 209-5607
MANUAL ADJUSTMENT

ITEM	NUMBER	QTY	DESCRIPTION
-	502776D1	--	MIRROR GP-REAR VIEW (FIELD INSTALLED)
-	209-5607	--	MIRROR GP-REAR VIEW (NOT SERVICED, ORDER FIELD INSTALLED)
1	206-0586	1	MIRROR ASM-REAR VIEW (LH) (INCLUDES 1A & 1B)
1A	206-0581	1	SUPPORT ASM
1B	206-0578	1	MIRROR ASM
2	209-5605	1	MIRROR GP-REAR VIEW (RH) (INCLUDES 2A & 2B)
2A	209-5604	1	SUPPORT ASM
2B	206-0578	1	MIRROR ASM
3	CH209-9233	16	CLAMP
4	400111X1	8	GROMMET
5	400599X1	16	WASHER-HARD (8.8X20.5X2)
6	400245X1	16	BOLT (M8X1.25X30MM)

0852423B
PR: t05i29k58b0505

MIRROR GP-REAR VIEW - 209-5608
POWER ADJUSTMENT & HEATED

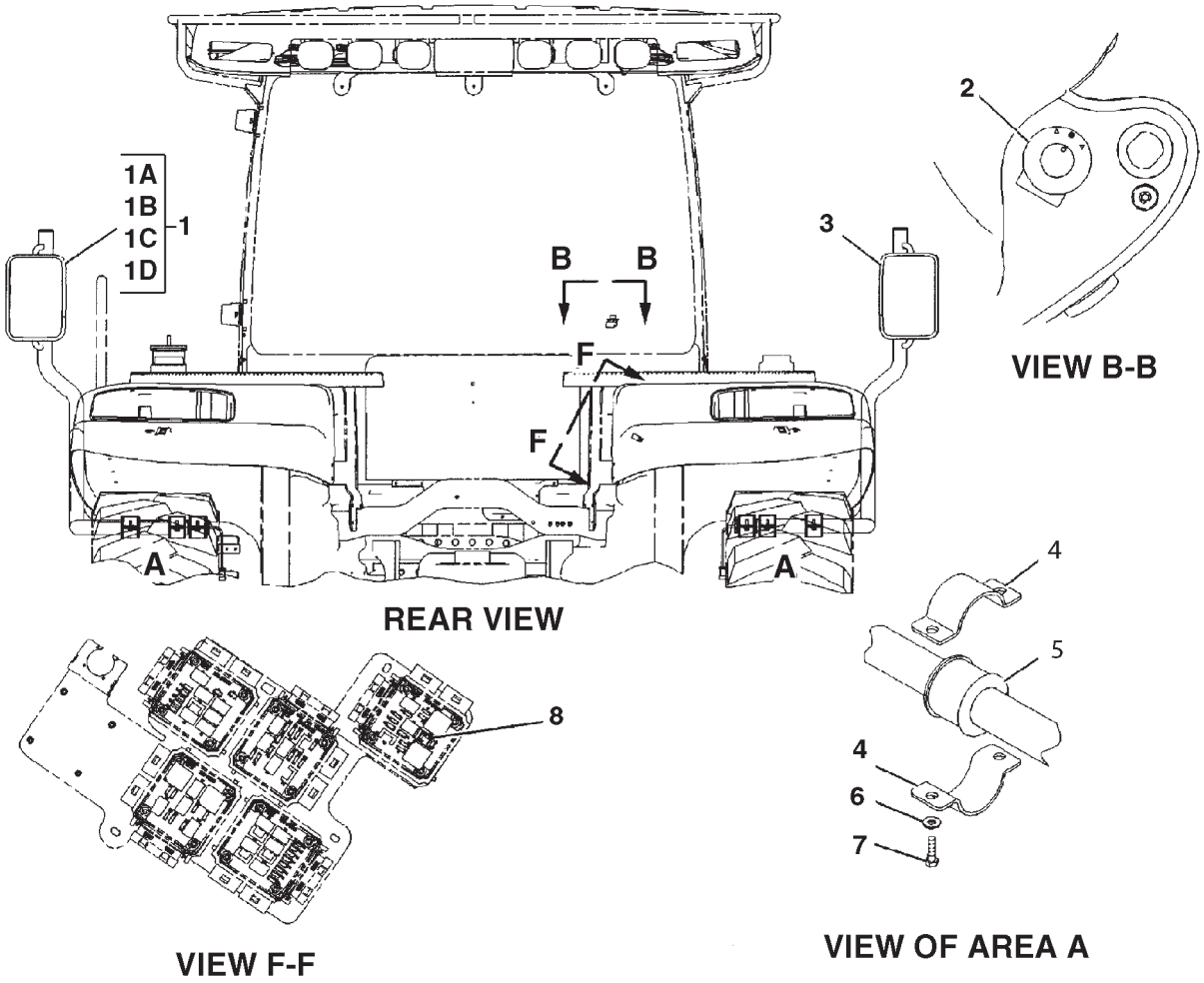

0892108A

MIRROR GP-REAR VIEW - 209-5608
POWER ADJUSTMENT & HEATED

ITEM	NUMBER	QTY	DESCRIPTION
-	209-5608	--	MIRROR GP-REAR VIEW [A] (NOT SERVICED)
1	206-0584	1	MIRROR ASM-REAR VIEW (LH) (INCLS 1A-1D)
1A	CH102-8805	1	KIT-RECEPTACLE (6 PIN)
1B	206-0580	1	HARNESS ASM (REAR VIEW MIRROR)
1C	206-0581	1	SUPPORT ASM (LH)
1D	206-0579	1	MIRROR
	207-0511		GLASS-MIRROR
2	207-2038	1	SWITCH
3	209-5606	1	MIRROR GP-REAR VIEW (RH)
	102-8805	1	KIT-RECEPTACLE (6 PIN)
	206-0580	1	HARNESS (REAR VIEW MIRROR)
	209-5604	1	SUPPORT (RH)
	206-0579	1	MIRROR HEAD
	207-0511	1	GLASS-MIRROR
4	CH209-9233	16	CLAMP
5	400111X1	8	GROMMET
6	400599X1	16	WASHER-HARD (8.8X20.5X2)
7	400245X1	16	BOLT (M8X1.25X30MM)
8	CH146-9439	1	RELAY (12 VOLT)

[A] PART OF 500841D1; 500842D1;
500843D1; 500849D1 CAB AR

0892108A
PR: t05i29k58b0506

MIRROR GP - 206-0588

SIDE AREA VIEW
EAME ONLY

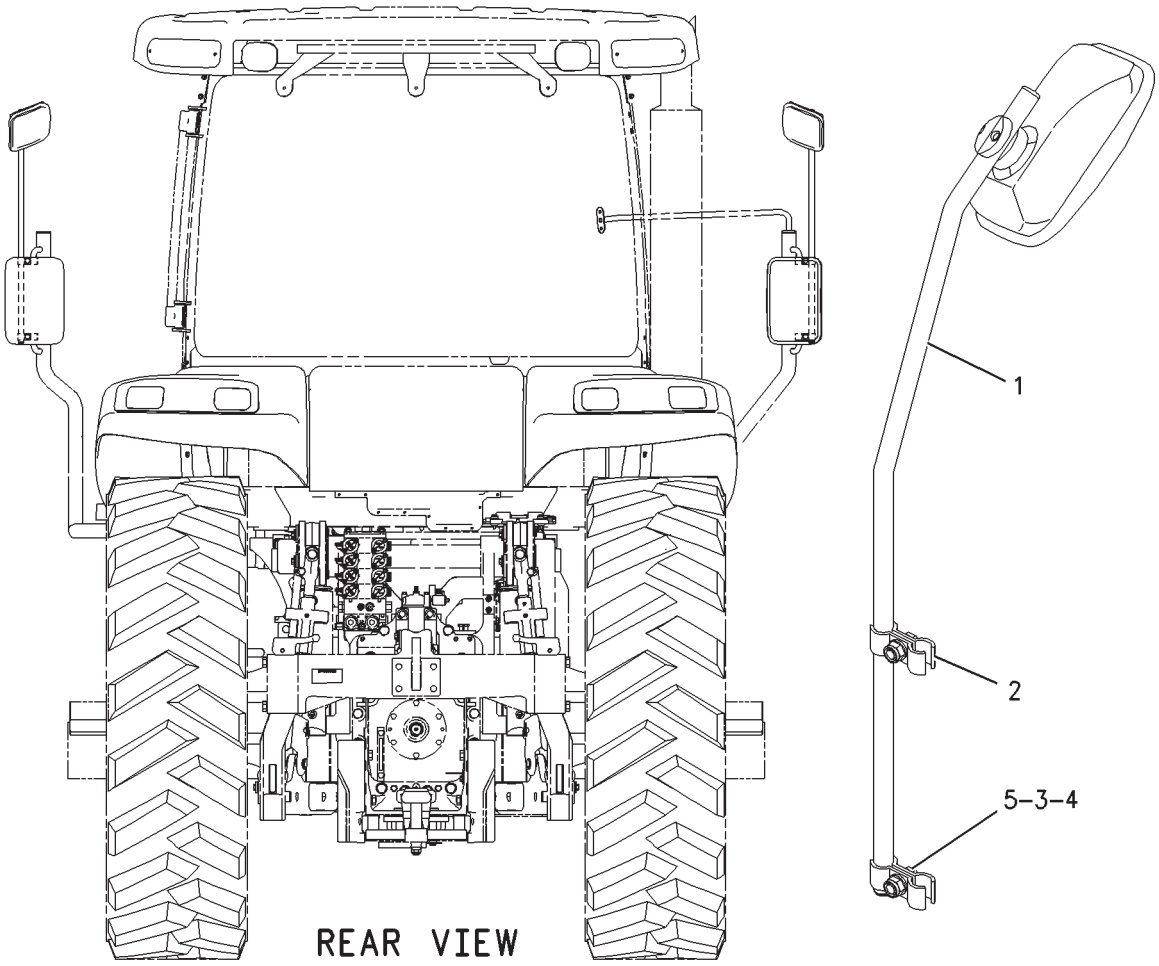

00821303

MIRROR GP - 206-0588

SIDE AREA VIEW
EAME ONLY

ITEM	NUMBER	QTY	DESCRIPTION
-	206-0588	--	MIRROR GP-SIDE AREA VIEW [A] (NOT SERVICED)
1	206-0589	2	MIRROR AS
2	CH4H-7655	8	CLAMP-TUBE
3	CH8T-0389	4	LOCKNUT (M10X1.5 THD)
4	400287X1	8	WASHER-HARD (11X21X2.5MM THK)
5	400039X1	4	BOLT (M10X1.5X25MM)

[A] PART OF 500841D1; 500842D1 CAB AR

00821303
PR: t05i29k58b0507

RADIO GP-STD - 168-1952

12V HD, AM/FM/WB/CASS W/GREEN BACKLIGHT

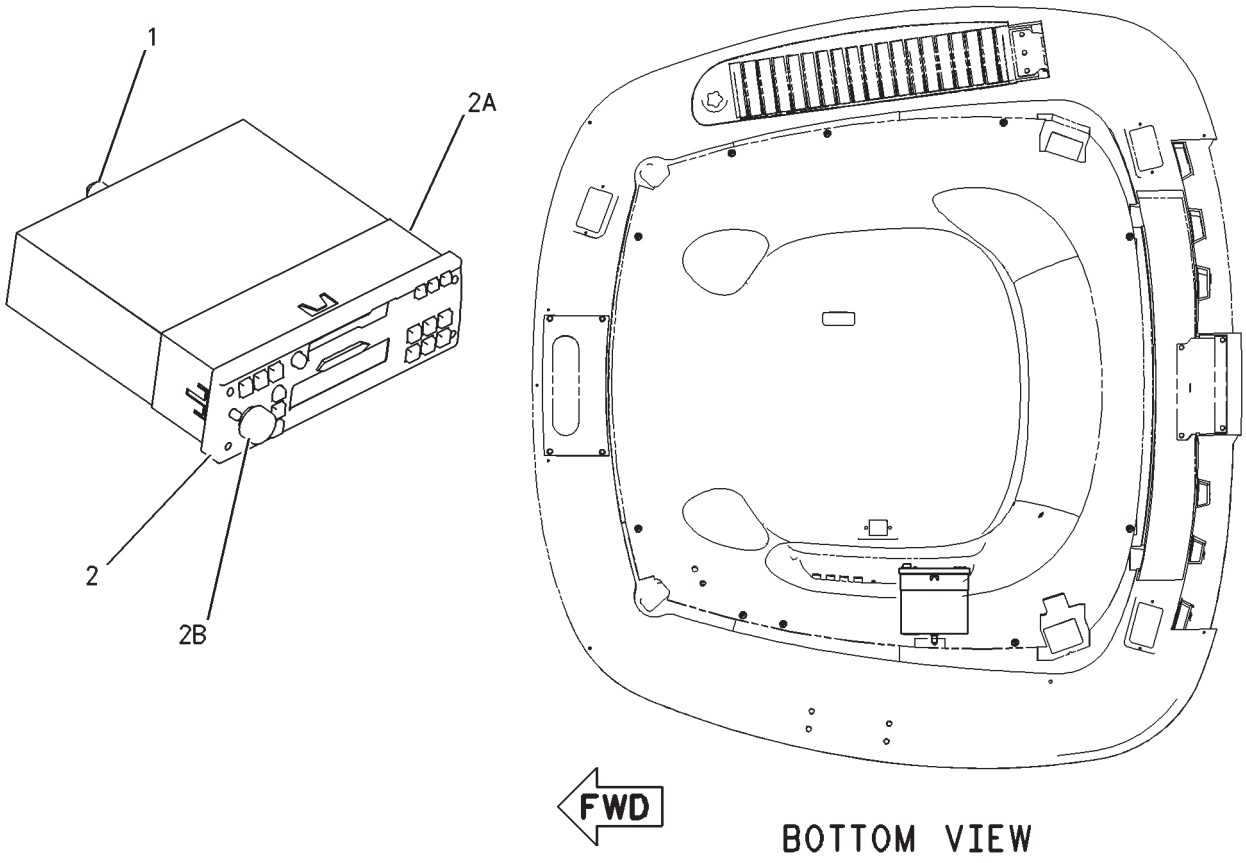

00732187

RADIO GP-STD - 168-1952

12V HD, AM/FM/WB/CASS W/GREEN BACKLIGHT

ITEM	NUMBER	QTY	DESCRIPTION
-	168-1952	--	RADIO GP
1	CH136-5490	1	BUSHING
2	CH169-6324	1	RADIO GP
2A	CH192-7054	1	SLEEVE
2B	CH142-9681	1	KNOB (RADIO VOLUME)
-	400455X1	1	CONNECTOR [A]

[A] MATING CONNECTOR REQUIRED TO CONNECT RADIO

00732187
PR: t05i29k58b0508

RADIO GP-DELUXE - 168-1970

12V HD AM/FM/WB/CAS/REMOTE/GRN BACKLIGHT ROW AND SPECIAL APPLICATIONS

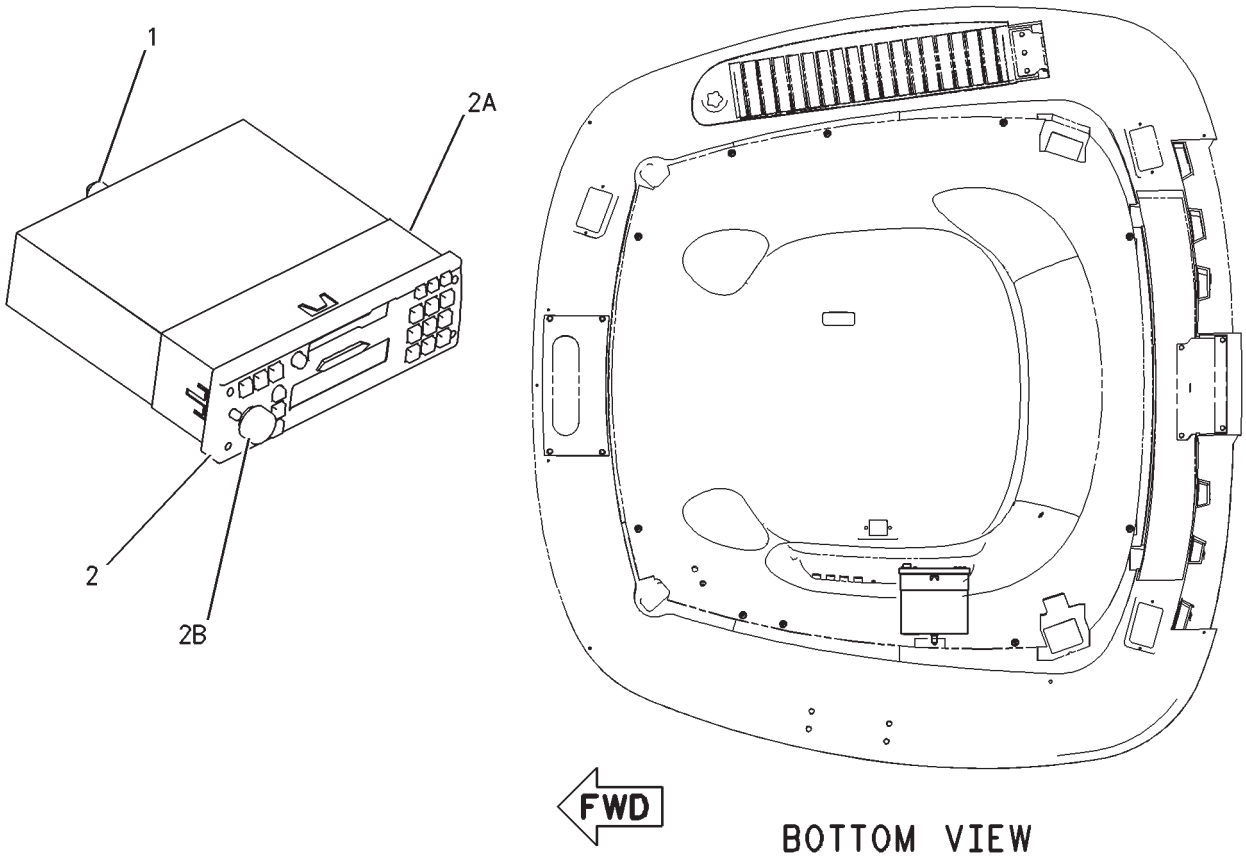

RADIO GP-DELUXE - 168-1970

12V HD AM/FM/WB/CAS/REMOTE/GRN BACKLIGHT
ROW AND SPECIAL APPLICATIONS

ITEM	NUMBER	QTY	DESCRIPTION
-	168-1970	--	RADIO GP
1	CH136-5490	1	BUSHING
2	CH169-6325	1	RADIO GP
2A	CH192-7054	1	SLEEVE [A]
2B	CH142-9681	1	KNOB (RADIO VOLUME)
-	CH170-7251	1	CHANGER-CD [B]
-	400455X1	1	CONNECTOR [C]

[A] FOR FRONT RADIO MOUNTING
[B] CD CHANGER WITH RADIO COMPATIBLE
[C] MATING CONNECTOR REQUIRED TO CONNECT RADIO

00732192
PR: t05i29k58b0509

RADIO GP-DELUXE CD - 170-5739

12V HD AM/FM/WB/CD/REMOTE/GRN BACKLIGHT
ROW AND SPECIAL APPLICATIONS

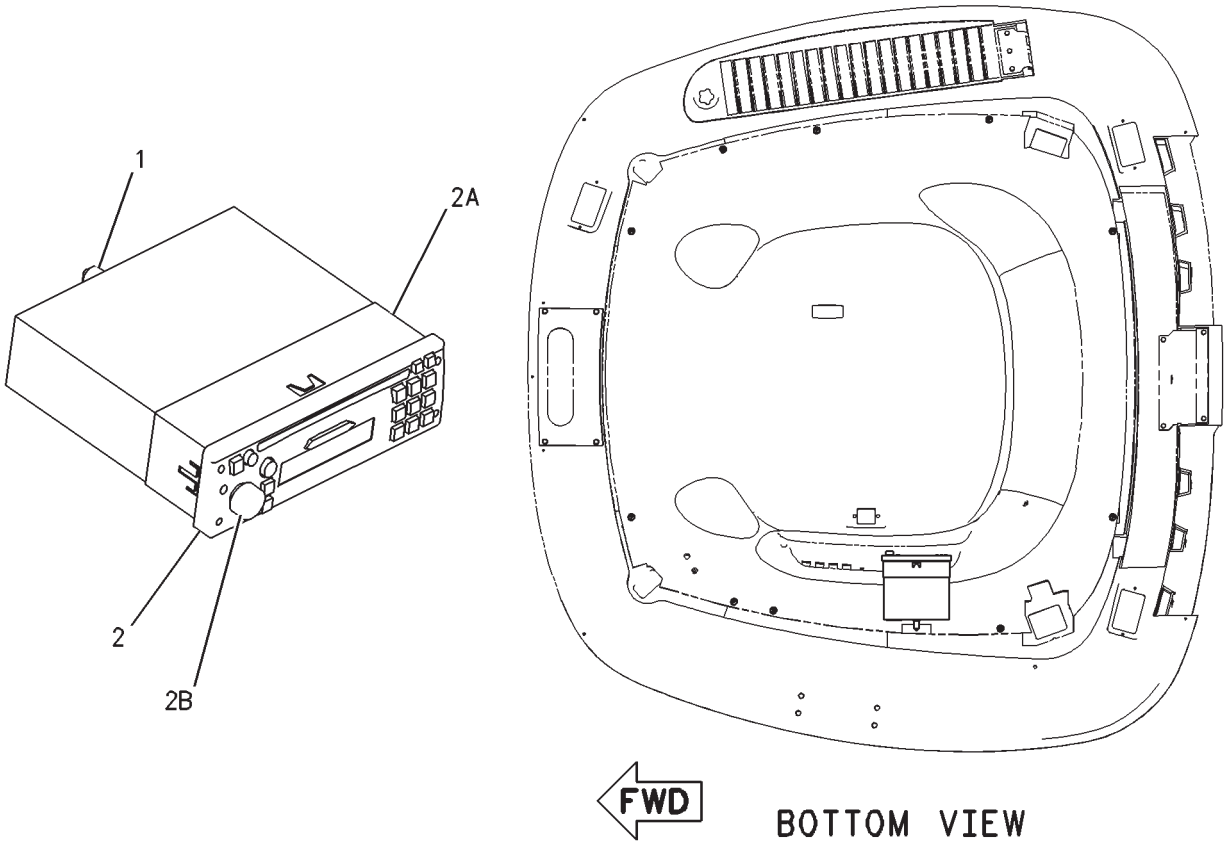

00732194

RADIO GP-DELUXE CD - 170-5739

12V HD AM/FM/WB/CD/REMOTE/GRN BACKLIGHT
ROW AND SPECIAL APPLICATIONS

ITEM	NUMBER	QTY	DESCRIPTION
-	170-5739	--	RADIO GP
1	CH136-5490	1	BUSHING
2	CH169-6326	1	RADIO GP
2A	CH192-7054	1	SLEEVE [A]
2B	CH142-9681	1	KNOB (RADIO VOLUME)
-	400455X1	1	CONNECTOR RADIO [B]
-	CH170-7251	1	CHANGER-CD [C]

[A] FOR FRONT RADIO MOUNTING
[B] MATING CONNECTOR REQUIRED TO CONNECT RADIO
[C] CD CHANGER COMPATIBLE WITH RADIO

00732194
PR: t05i29k58b0510

CHANGER GP-COMPACT DISC - 173-6507

ROW AND SPECIAL APPLICATIONS

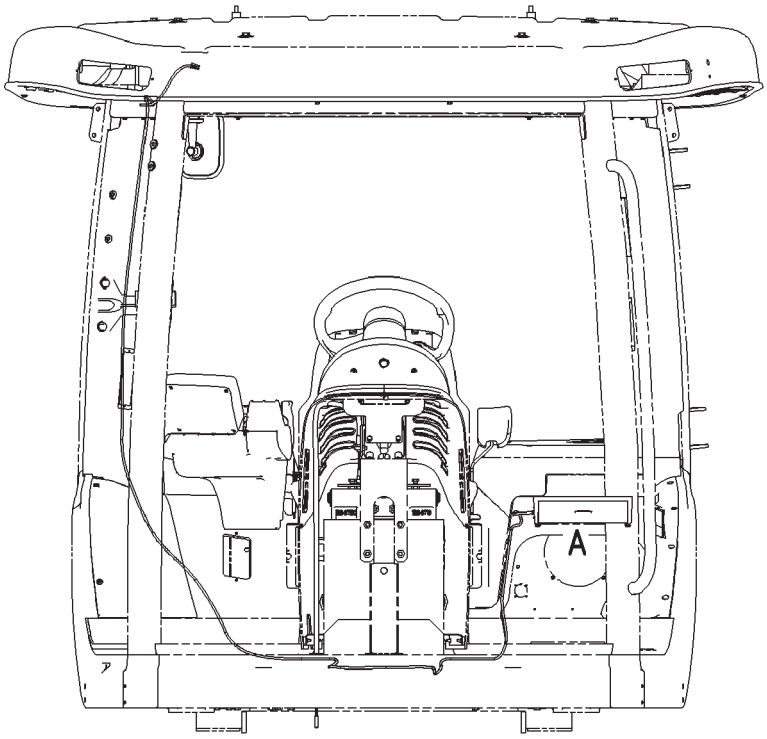

FRONT VIEW

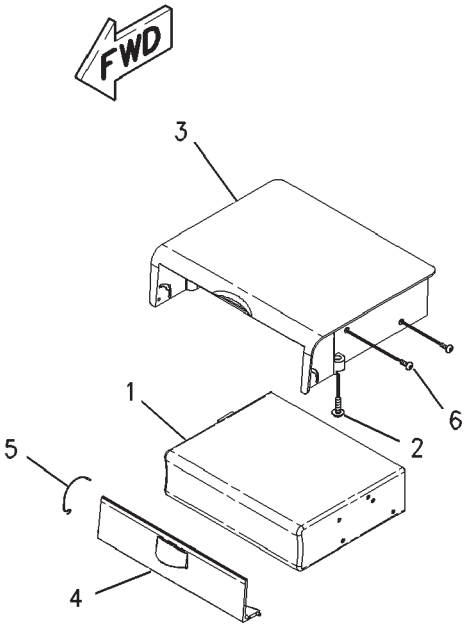

VIEW OF AREA A

CHANGER GP-COMPACT DISC - 173-6507

ROW AND SPECIAL APPLICATIONS

ITEM	NUMBER	QTY	DESCRIPTION
-	173-6507	--	CHANGER GP-COMPACT DISC
1	CH170-7251	1	CHANGER-COMPACT DISC [A]
	170-7253	1	MAGAZINE ASM-COMPACT DISC (6 DISC) [A] (NOT SHOWN, NOT PART OF THIS GROUP)
2	CH9X-2045	2	SCREW-TRUSS HEAD (M6X1X20MM)
3	172-6844	1	FRAME
4	172-6845	1	DOOR
5	CH172-6847	1	SPRING
6	CH7Y-7388	4	SCREW-BUTTON HEAD (M5X0.8X12MM)
-	400486X1	1	CONNECTOR CD CHANGER [B]

[A] CD MAGAZINE TO BE USED WITH CD CHANGER
[B] MATING CONNECTOR REQUIRED TO CONNECT TO CD CHANGER

00885053
PR: t05i29k58b0511

RADIO GP-AUTOGUIDE - 232-0869

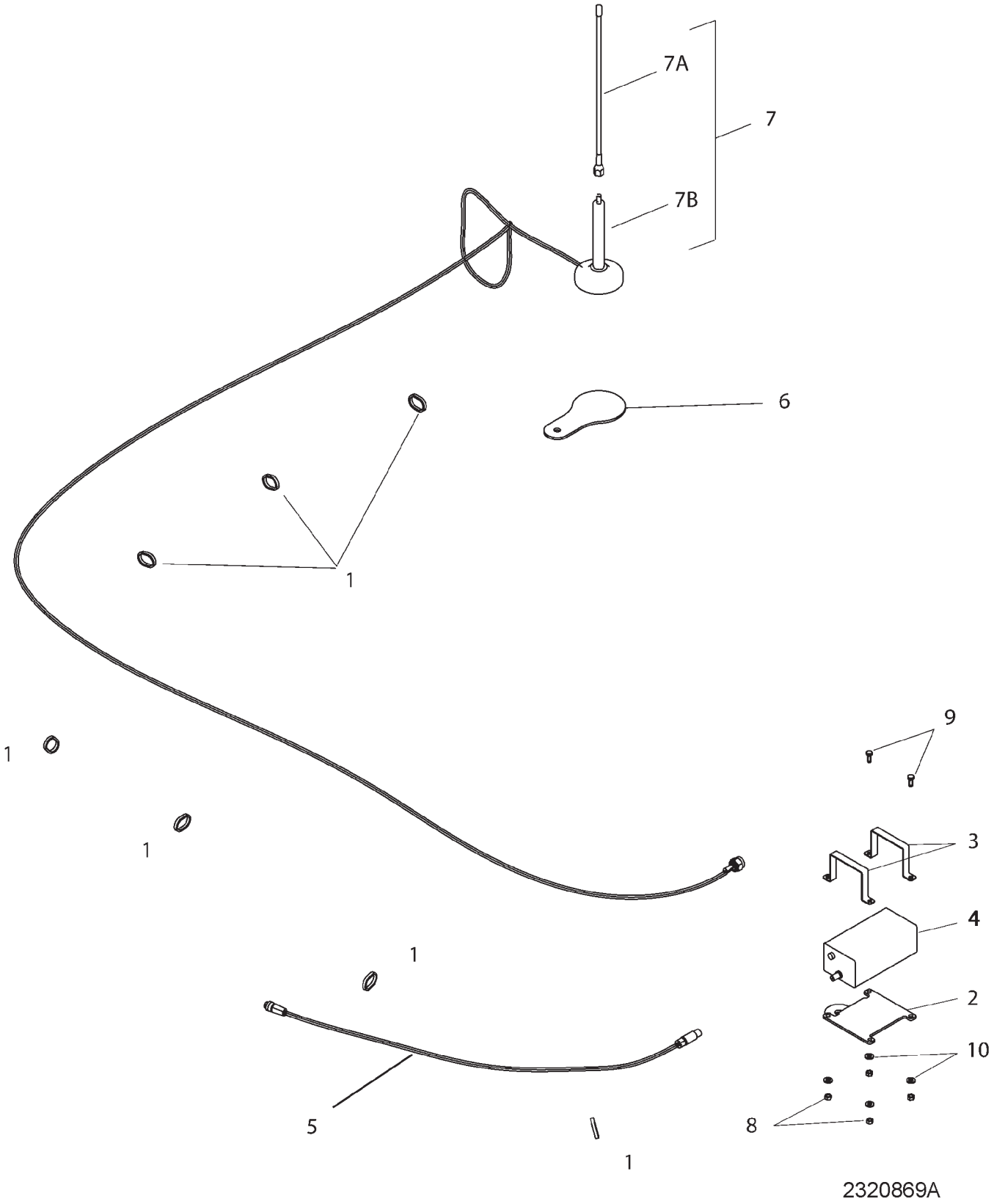

RADIO GP-AUTOGUIDE - 232-0869

ITEM	NUMBER	QTY	DESCRIPTION
-	233-6580	--	RADIO GP-AUTOGUIDE (FIELD)
-	232-0869	--	RADIO GP-AUTOGUIDE (FACT) (NOT SERVICED, ORDER FIELD INSTALLED)
1	CH7K-1181	7	STRAP-CABLE 0.19-4.00
2	219-4779	1	BRACKET
3	219-4796	2	BRACKET
4	221-2642	1	MOUNT AS.-RADIO
5	221-5389	1	HARNESS AS
6	500361D1	1	PLATE
7	500362D1	1	ANTENNA AS-FREEWAVE (INCL 7A & 7B)
7A	500364D1	1	WHIP
7B	500363D1	1	BASE
8	400300X1	4	NUT M6X1
9	400152X1	4	BOLT-M6X1X16MM ZNDI HHD 10.9
10	CH8T-4205	4	WASHER-HARD 7.2IDX14.5ODX2MM

2320869A
PR: t05i29k58b0512

ROOF GP-CAB - 152-0417
ROW AND SPECIAL APPLICATIONS

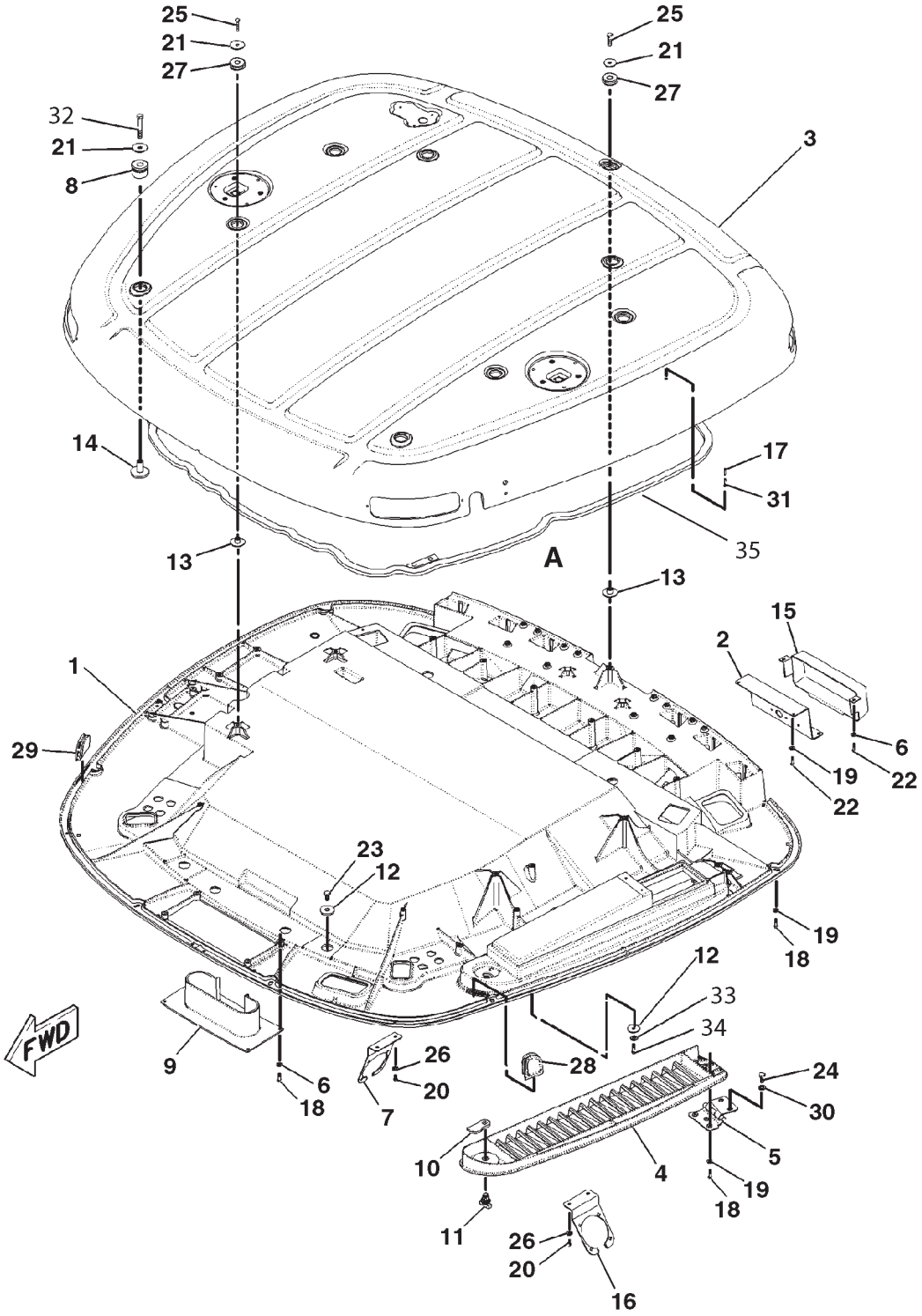

0892132B

ROOF GP-CAB - 152-0417
ROW AND SPECIAL APPLICATIONS

ITEM	NUMBER	QTY	DESCRIPTION
-	152-0417	--	ROOF GP-CAB [A](NOT SERVICED)
1	152-0441	1	ROOF ASM (INNER)
	CH216-7617	14	INSERT (M6)
	CH222-4435	7	INSERT (M8X1.25)
2	162-6654	1	PLATE
3	162-6655	1	ROOF ASM (OUTER)
	CH216-7616	8	INSERT (M4)
	CH216-7617	7	INSERT (M6)
4	162-6693	1	DOOR-FILTER
5	CH195-2614	1	HINGE ASM
6	CH8T-4205	6	WASHER-HARD (7.2X14.5X2MM)
7	502322D1	1	BRACKET (REAR SPEAKER-RH)
8	CH195-2609	4	GROMMET
9	168-2284	1	COVER
10	CH179-3160	1	CAM-LATCH
11	CH174-6381	1	LATCH
12	400119X1	4	SPACER (13X44X5MM THK)
13	CH195-2607	5	SPACER
14	CH195-2608	4	SPACER
15	179-4203	1	COVER
16	502321D1	1	BRACKET (REAR SPEAKER-LH)
17	CH217-5909	1	SCREW-PAN HEAD (M6X1X16MM)
18	400048X1	14	BOLT (M6X1X20MM)
19	CH5P-4115	14	WASHER-HARD (7.2X19X2)
20	CH110-2028	4	SCREW-PAN HEAD (10-14X.75 IN)
21	CH8T-4226	9	WASHER-PLATED (10.5X45X3)
22	400152X1	6	BOLT (M6X1X16MM)
23	400040X1	2	BOLT (M10X1.5X20MM)
24	400227X1	2	BOLT (M8X1.25X16MM)
25	400042X1	5	BOLT (M8X1.25X35MM)
26	400310X1	4	WASHER (6.6X12X2)
27	CH195-2600	5	GROMMET
28	CH195-2601	1	GROMMET-LH
29	CH195-2602	1	GROMMET-RH
30	400339X1	2	WASHER-HARD (8.8X16X2)
31	CH196-2881	1	CLIP
32	400066X1	4	BOLT (M10X1.50X70MM)
33	400287X1	2	WASHER-HARD (11X21X2.5)
34	400058X1	2	BOLT (M10X1.5X30MM)
35	217-2214	1	INSULATION GP-WEATHER (NOT SERVICED)
			(SEE BREAKDOWN FOR COMPONENTS)

[A] PART OF 500843D1; 500844D1; 500849D1
CAB AR

0892132B
PR: t05i29k58b0513

ROOF GP-CAB - 152-0444
EAME ONLY

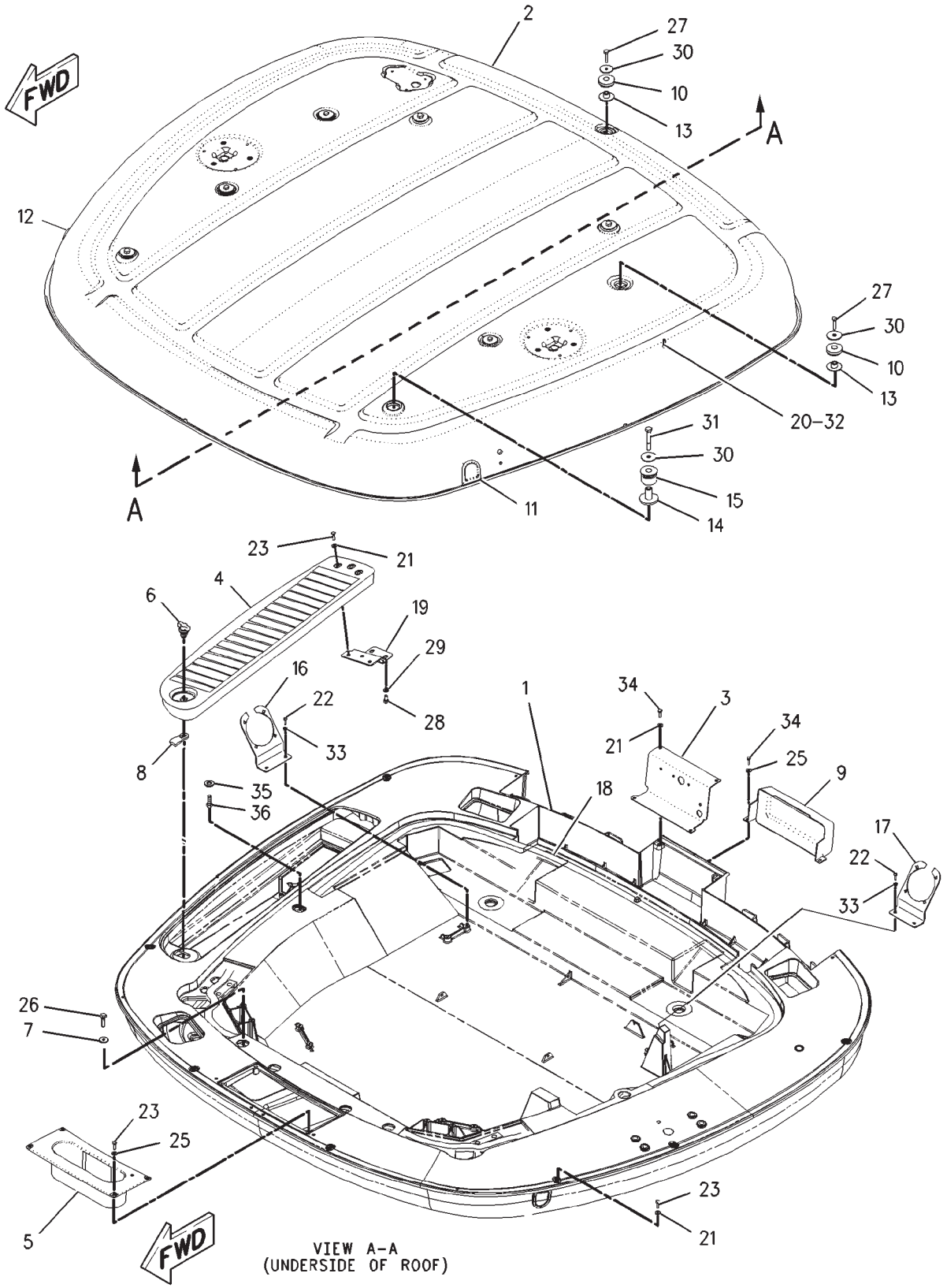

1520444B

ROOF GP-CAB - 152-0444
EAME ONLY

ITEM	NUMBER	QTY	DESCRIPTION
-	152-0444	--	ROOF GP-CAB [A] (NOT SERVICED)
1	152-0441	1	ROOF AS (INNER)
2	162-4111	1	ROOF AS (OUTER)
3	162-6654	1	PLATE
4	162-6693	1	DOOR AS (FILTER)
5	168-2284	1	COVER
6	CH174-6381	1	LATCH AS
7	400119X1	4	SPACER (13X44X5MM THK)
8	CH179-3160	1	CAM-LATCH
9	179-4203	1	COVER-REAR WIPER
10	CH195-2600	5	GROMMET
11	CH195-2601	1	GROMMET-LH
12	CH195-2602	1	GROMMET-RH
13	CH195-2607	5	SPACER
14	CH195-2608	4	SPACER
15	CH195-2609	4	GROMMET
16	502321D1	1	BRACKET (REAR SPEAKER)(RH)
17	502322D1	1	BRACKET (REAR SPEAKER)(LH)
18	217-2214	1	INSULATION GP-COLD WEATHER
			(SEE BREAKDOWN FOR COMPONENTS)
19	CH195-2614	1	HINGE AS-FILTER DOOR
	400313X1	3	NUT-WELD (M6)
20	CH196-2881	1	CLIP
21	CH5P-4115	14	WASHER-HARD (7.2X19X2MM THK)
22	CH110-2028	4	SCREW-PAN HEAD (10-14X.75 IN)
23	400048X1	14	BOLT (M6X1.0X20MM)
24			NOT USED
25	CH8T-4205	6	WASHER-HARD (7.2X14.5X2MM THK)
26	400040X1	2	BOLT (M10X1.5X20MM)
27	400042X1	5	BOLT (M8X1.25X35MM)
28	400227X1	2	BOLT (M8X1.25X16MM)
29	400339X1	2	WASHER-HARD (8.8X16X2MM THK)
30	CH8T-4226	9	WASHER-PLATED (10.5X45X3MM THK)
31	400066X1	4	BOLT (M10X1.50X70MM)
32	CH217-5909	1	SCREW-PAN HEAD (1/4-15X12.7)
33	400310X1	4	WASHER (6.6X12X2MM THK)
34	400152X1	6	BOLT (M6X1X16MM)
35	400287X1	2	WASHER-HARD (11X21X2.5MM THK)
36	400058X1	2	BOLT (M10X1.5X30MM)

[A] PART OF 152-0008; 152-0009;
500841D1; 500842D1 CAB AR

1520444B
PR: t05i29k58b0514

INSULATION GP-WEATHER - 217-2214

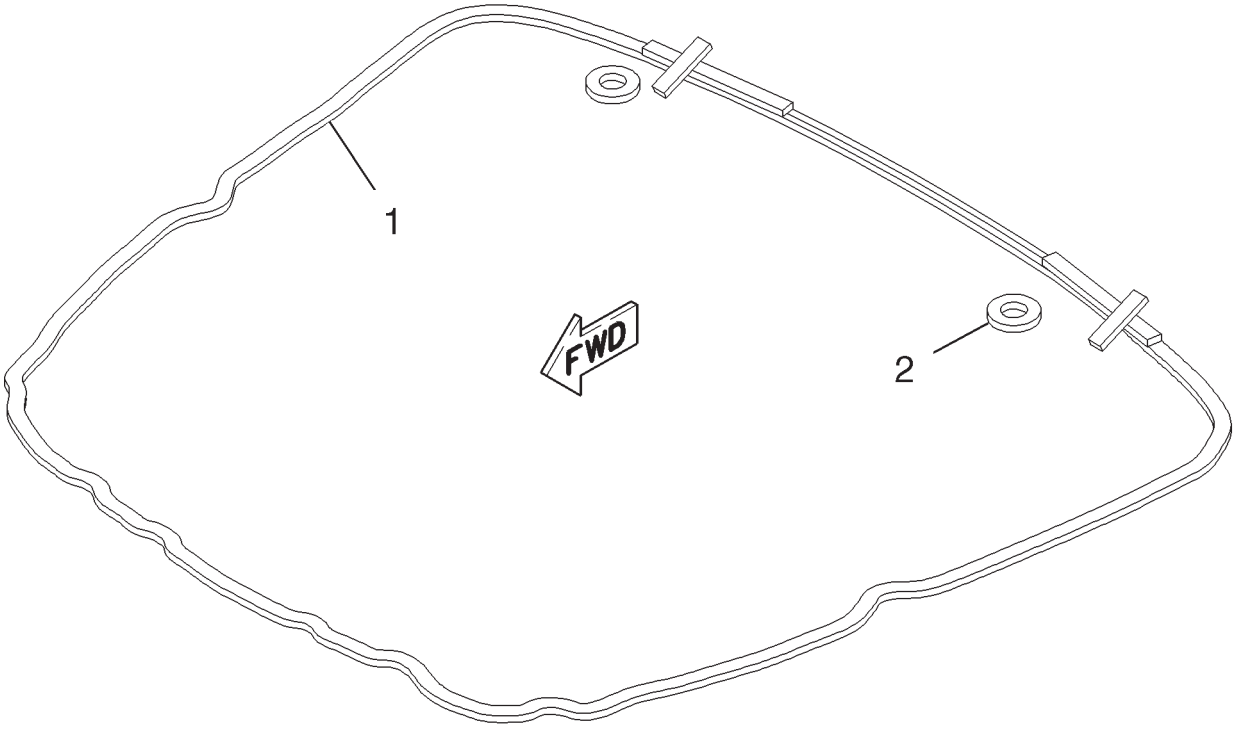

INSULATION GP-WEATHER - 217-2214

ITEM	NUMBER	QTY	DESCRIPTION
-	217-2214	--	INSULATION GP-WEATHER [A]
1	CH217-2130	1	SEAL (7620LX24WX12THK ADH BACK)
2	CH217-2131	2	SEAL (38IDX76ODX12THK ADH BACK)

[A] PART OF 152-0417; 152-0444 CAB AR

2172214C
PR: t05i29k58b0515

CONSOLE GP-MTG - 500839D1

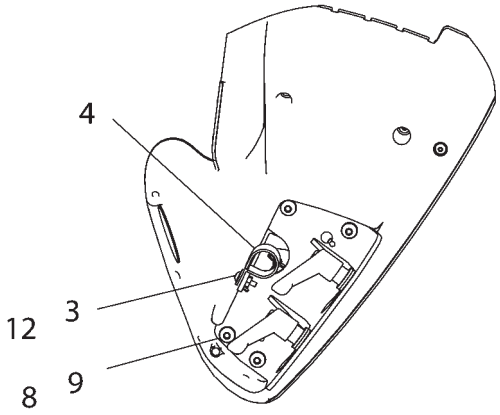

VIEW OF UNDERSIDE OF ARMREST

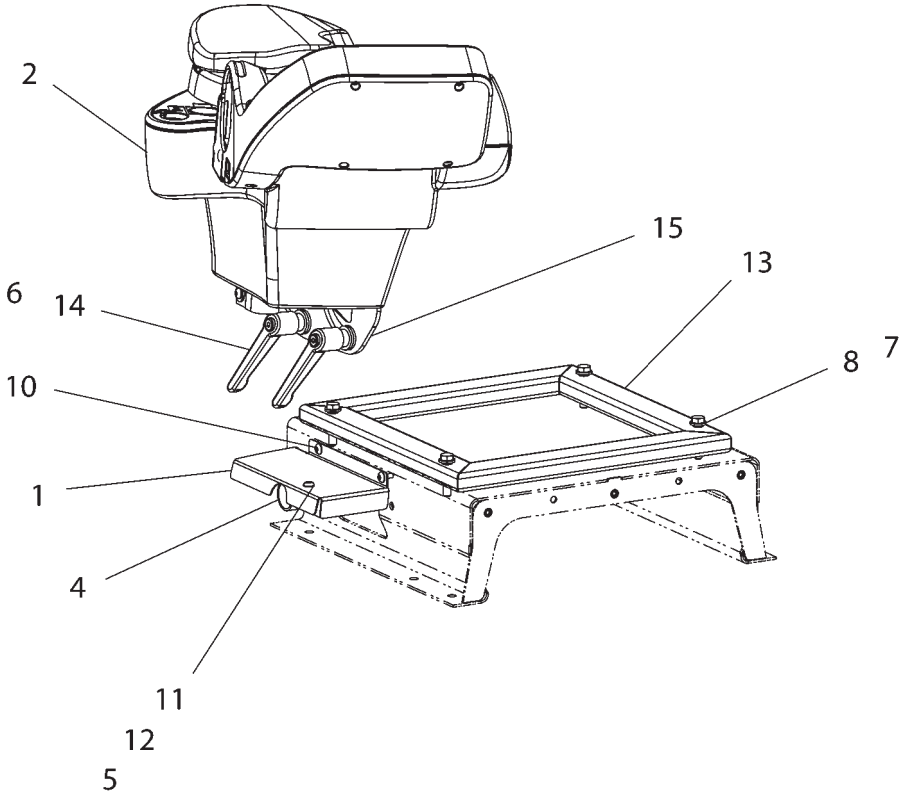

500839DC

CONSOLE GP-MTG - 500839D1

ITEM	NUMBER	QTY	DESCRIPTION
-	500839D1	--	CONSOLE GP-MOUNTING [A] (NOT SERVICED)
1	178-7952	1	BRACKET-ARMREST
2	152-0434	1	CONSOLE GP-OPERATOR
3	CH3E-8020	1	SCREW-M6X1X25 ORG TORX
4	CH4D-7388	2	CLIP-LOOP 34.9 ID
5	400300X1	1	NUT M6X1
6	CH5P-8247	4	WASHER-HARD 17IDX32ODX3.5MM
7	400161X1	4	BOLT-M10X1.5X50 PH&O HHD 10.9
8	CH6V-5839	8	WASHER-HARD 11IDX21ODX2.5MM
9	CH9X-2039	4	SCREW-M10X1.5X35 ORG TORX
10	CH9X-2044	2	SCREW-M6X1X16MM TRUSS HEAD
11	CH9X-2045	1	SCREW-M6X1X20 MM ORG TORX T30
12	CH9X-6165	2	WASHER-6.5IDX22ODX2.5MM
13	500483D1	1	SUPPORT AS
14	500854D1	2	LEVER
15	219-9656	1	BRACKET AS.-ARMREST

PART OF 500841D1; 500842D1; 500844D1;
500849D1 CAB AR

500839DC
PR: t05i29k58b0516

ARMREST GP - 500484D2
4 IMP W/PTO-W/O HTCH

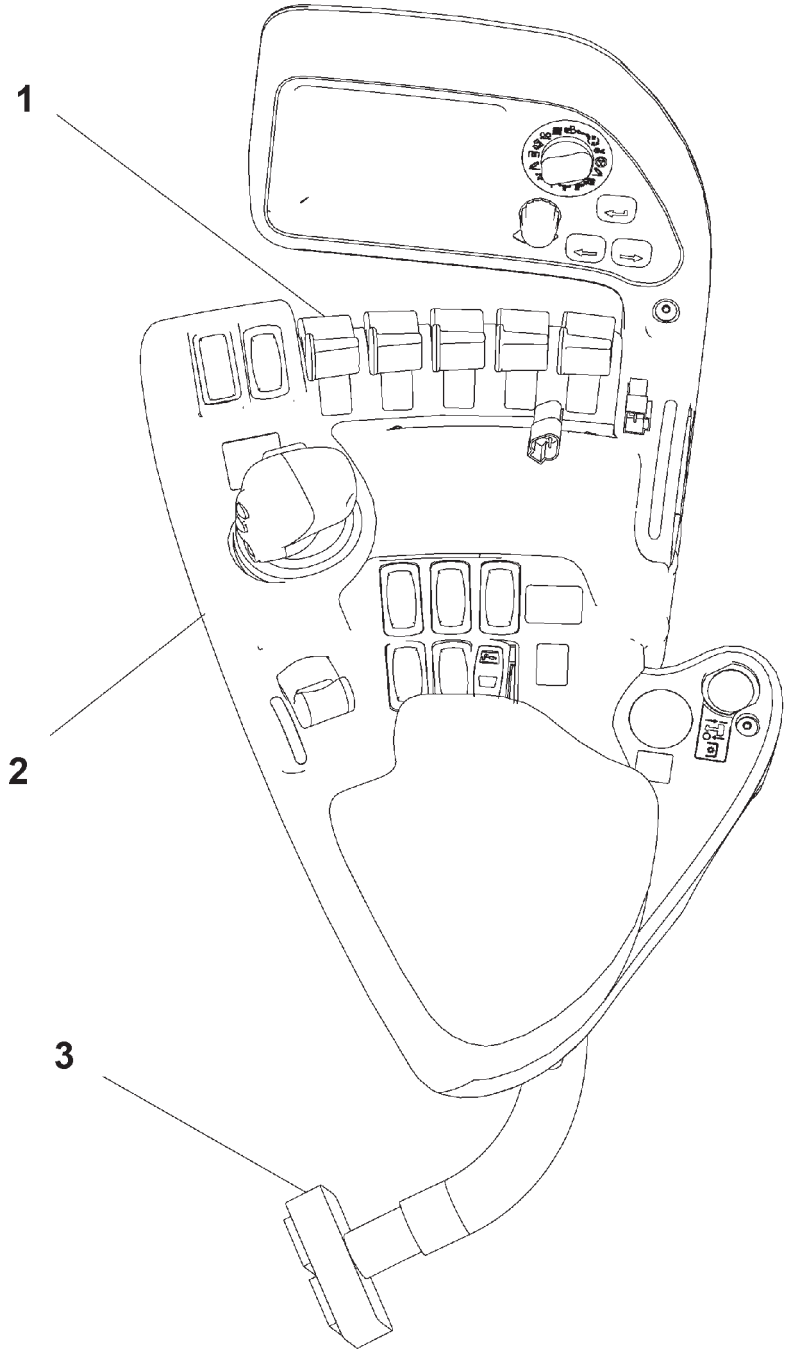

500484D2

ARMREST GP - 500484D2
4 IMP W/PTO-W/O HTCH

ITEM	NUMBER	QTY	DESCRIPTION
-	500484D2	--	ARMREST GP (NOT SERVICED)
1	152-0434	1	CONSOLE GP-OPERATOR (A) (NOT SERIVCED) (SEE BREAKDOWN FOR COMPONENTS)
2	152-0443	1	CONTROL GP (NOT SERIVCED) (SEE BREAKDOWN FOR COMPONENTS)
3	166-1211	1	WIRING GP-ARMREST (NOT SERIVCED) (SEE BREAKDOWN FOR COMPONENTS)

500484D2
PR: t05i29k58b0517

ARMREST GP - 500485D2
4 IMP W/PTO-W/HITCH

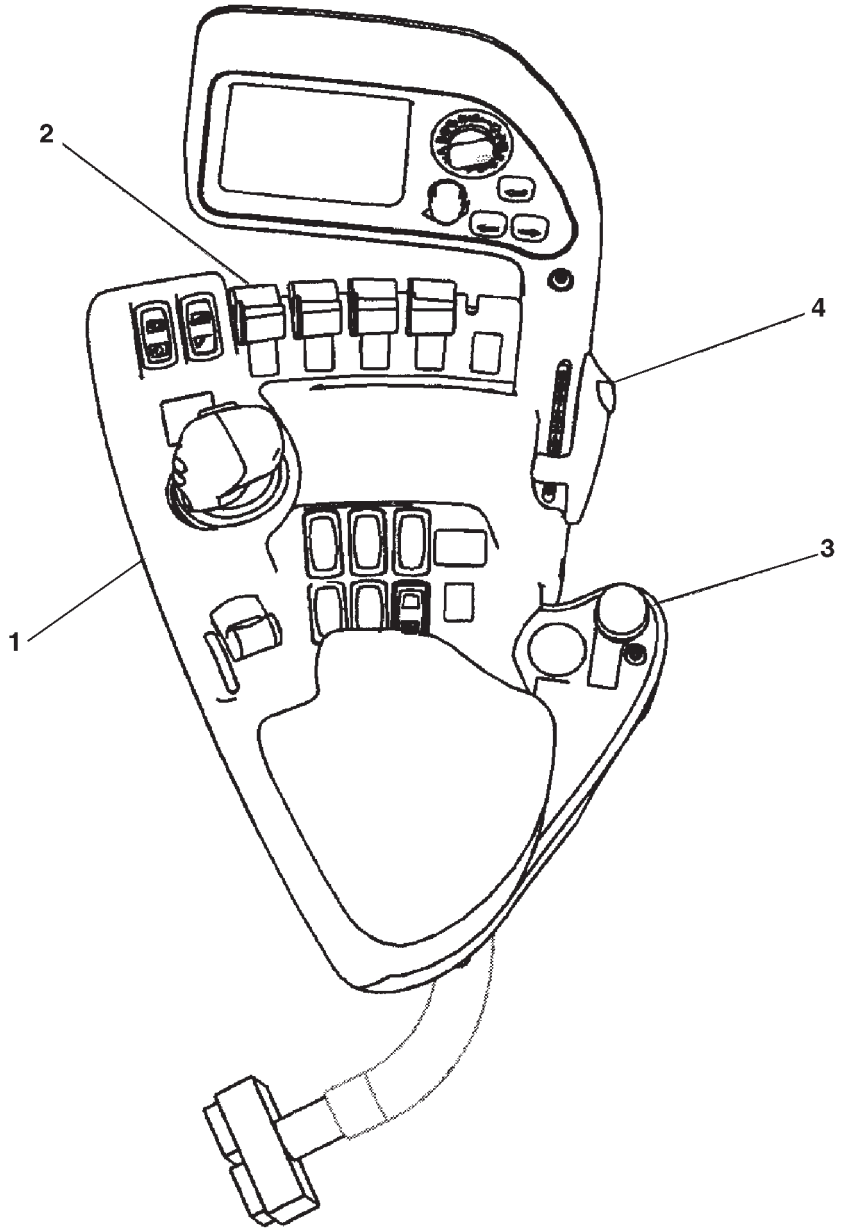

500485DA

ARMREST GP - 500485D2
4 IMP W/PTO-W/HITCH

ITEM	NUMBER	QTY	DESCRIPTION
-	500485D2	--	ARMREST GP (NOT SERVICED)
1	152-0434	1	CONSOLE GP-OPERATOR (A) (NOT SERIVCED) (SEE BREAKDOWN FOR COMPONENTS)
2	152-0443	1	CONTROL GP (NOT SERIVCED) (SEE BREAKDOWN FOR COMPONENTS)
3	166-1211	1	WIRING GP-B (NOT SERIVCED) (SEE BREAKDOWN FOR COMPONENTS)
4	152-0445	1	CONTROL GP-HITCH (NOT SERIVCED) (SEE BREAKDOWN FOR COMPONENTS)

500485DA
PR: t05i29k58b0518

ARMREST GP - 500486D2
4 IMP W/O PTO-W/O HITCH

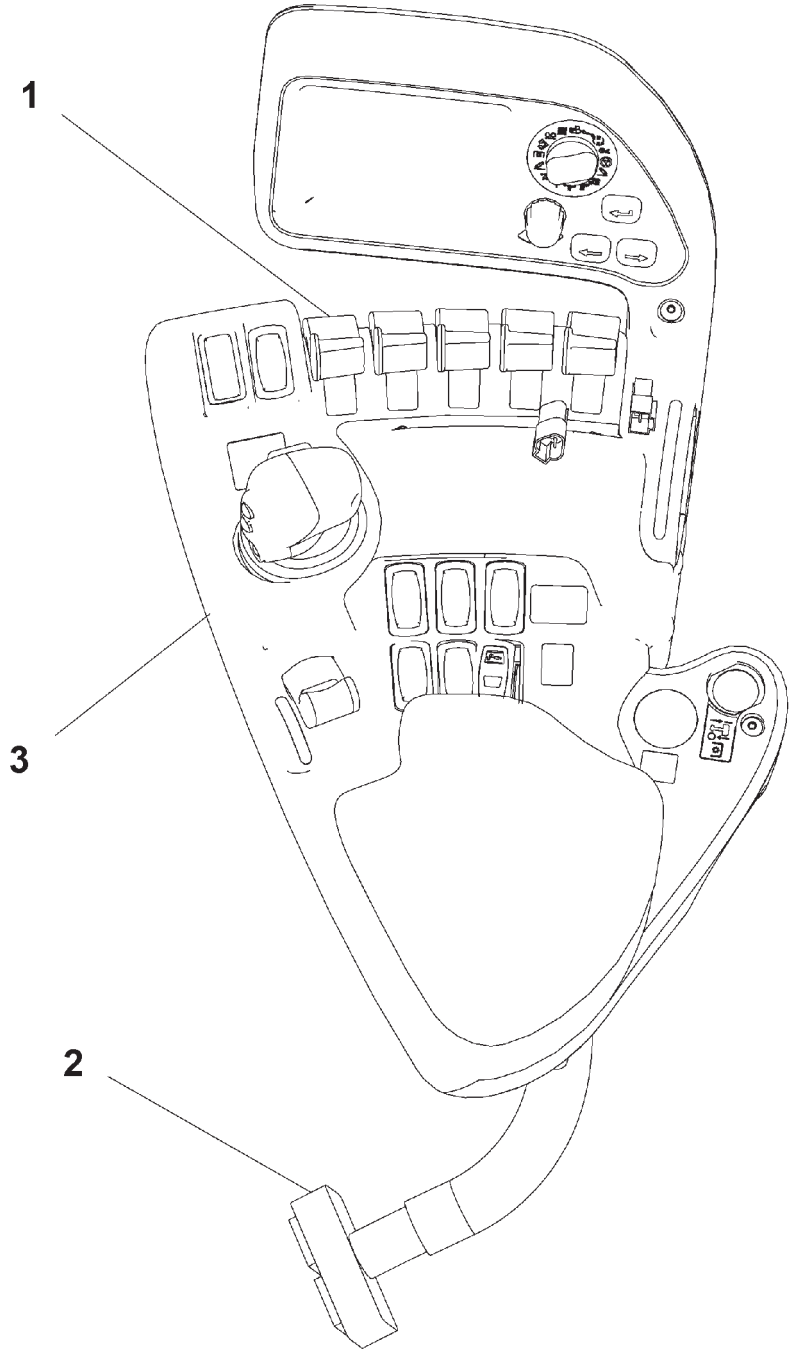

500486D2

ARMREST GP - 500486D2
4 IMP W/O PTO-W/O HITCH

ITEM	NUMBER	QTY	DESCRIPTION
-	500486D2	--	ARMREST GP (NOT SERVICED)
1	152-0443	1	CONTROL GP (NOT SERIVCED) (SEE BREAKDOWN FOR COMPONENTS)
2	136-5477	1	WIRING GP-ARMREST (NOT SERIVCED) (SEE BREAKDOWN FOR COMPONENTS)
3	152-0434	1	CONSOLE GP-OPERATOR (A) (NOT SERIVCED) (SEE BREAKDOWN FOR COMPONENTS)

500486D2
PR: t05i29k58b0519

ARMREST GP - 500487D2
4 IMP W/O PTO-W/HITCH

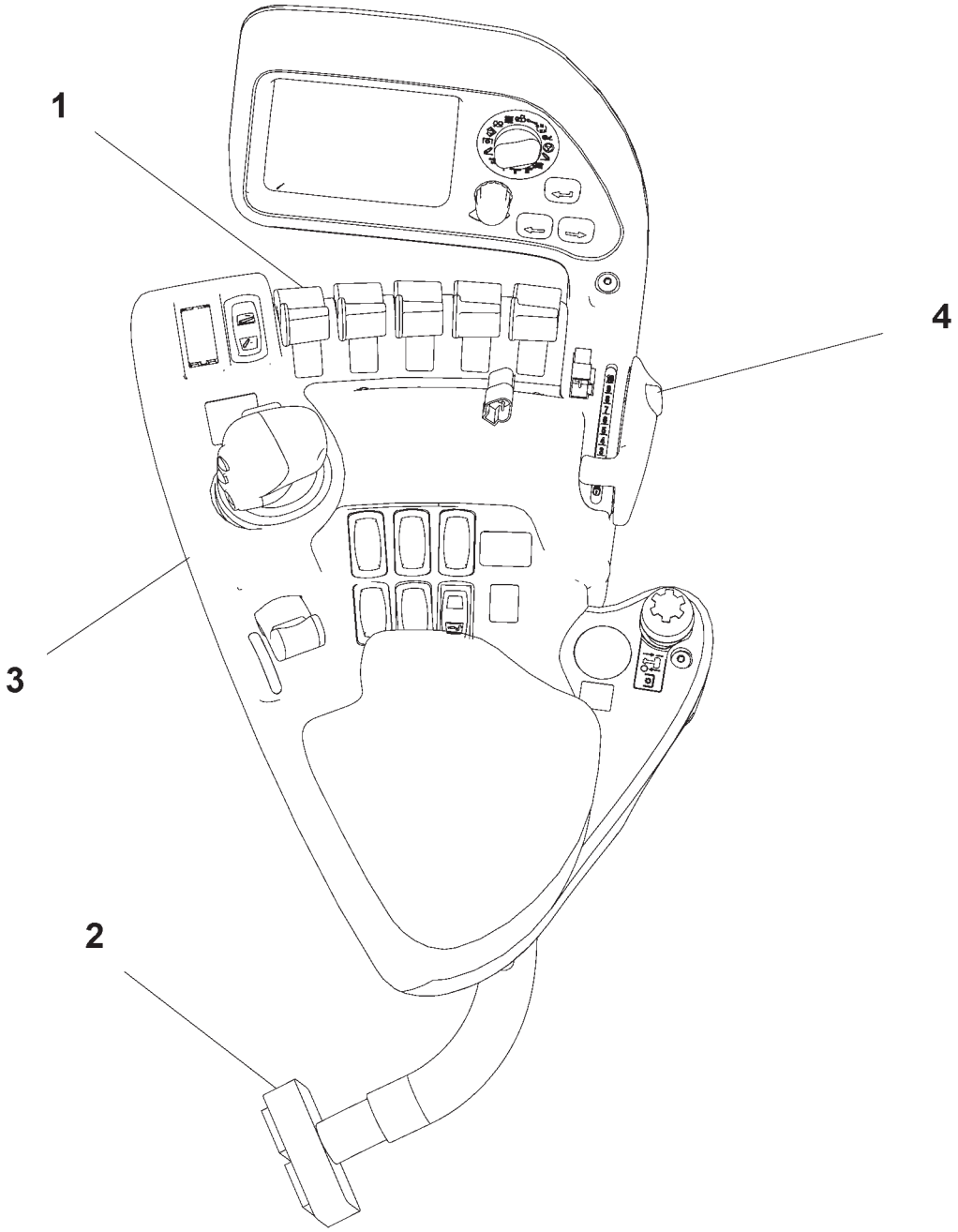

500487D2

ARMREST GP - 500487D2
4 IMP W/O PTO-W/HITCH

ITEM	NUMBER	QTY	DESCRIPTION
-	500487D2	--	ARMREST GP (NOT SERVICED)
1	152-0443	1	CONTROL GP (NOT SERIVCED) (SEE BREAKDOWN FOR COMPONENTS)
2	136-5477	1	WIRING GP-ARMREST (NOT SERIVCED) (SEE BREAKDOWN FOR COMPONENTS)
3	152-0434	1	CONSOLE GP-OPERATOR (A) (NOT SERIVCED) (SEE BREAKDOWN FOR COMPONENTS)
4	152-0445	1	CONTROL GP-HITCH (NOT SERIVCED) (SEE BREAKDOWN FOR COMPONENTS)

500487D2
PR: t05i29k58b0520

ARMREST GP - 500488D2
5 IMP W/PTO-W/O HITCH

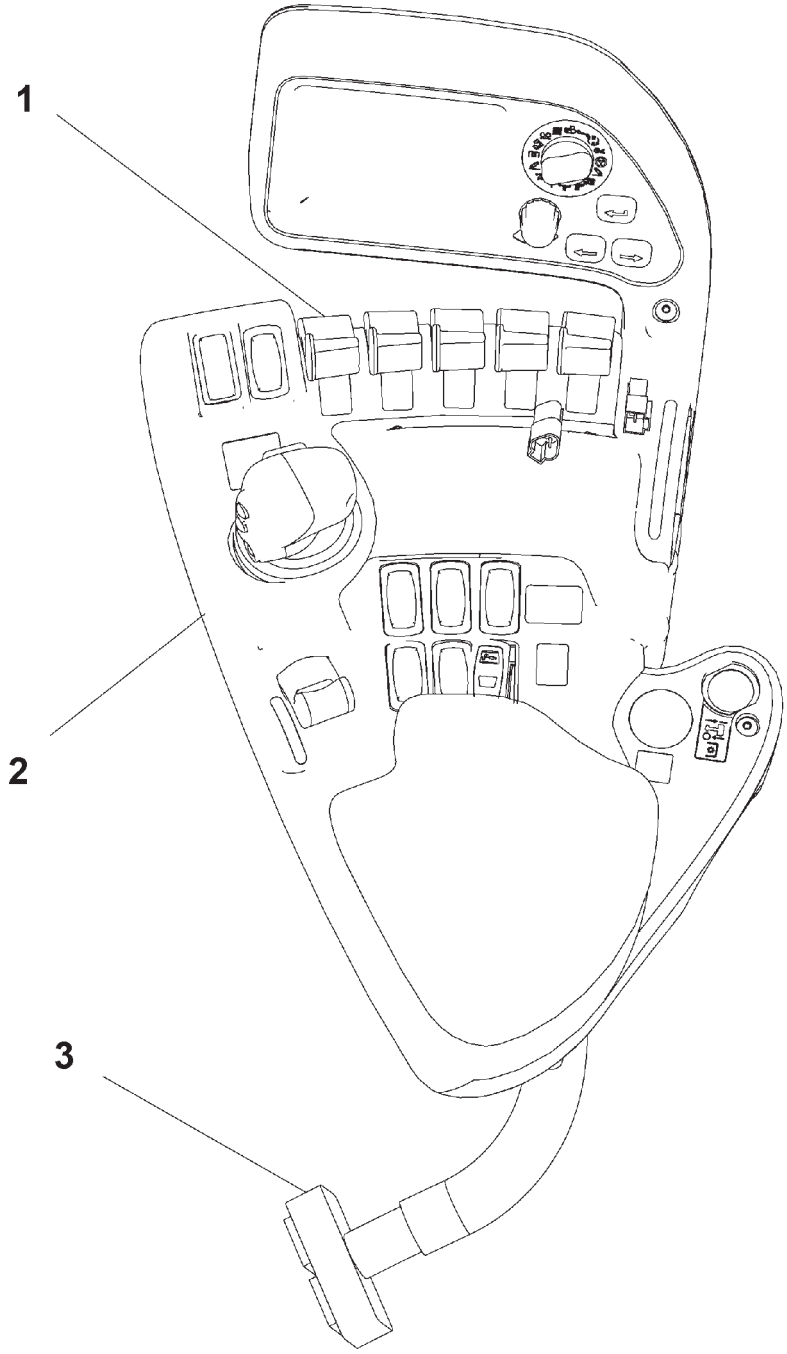

500488D2

ARMREST GP - 500488D2
5 IMP W/PTO-W/O HITCH

ITEM	NUMBER	QTY	DESCRIPTION
-	500488D2	--	ARMREST GP (NOT SERVICED)
1	166-4590	1	CONTROL GP (NOT SERIVCED) (SEE BREAKDOWN FOR COMPONENTS)
2	152-0434	1	CONSOLE GP-OPERATOR (A) (NOT SERIVCED) (SEE BREAKDOWN FOR COMPONENTS)
3	166-1211	1	WIRING GP-ARMREST (NOT SERIVCED) (SEE BREAKDOWN FOR COMPONENTS)

500488D2
PR: t05i29k58b0521

ARMREST GP - 500489D2
5 IMP W/PTO-W/HTCH

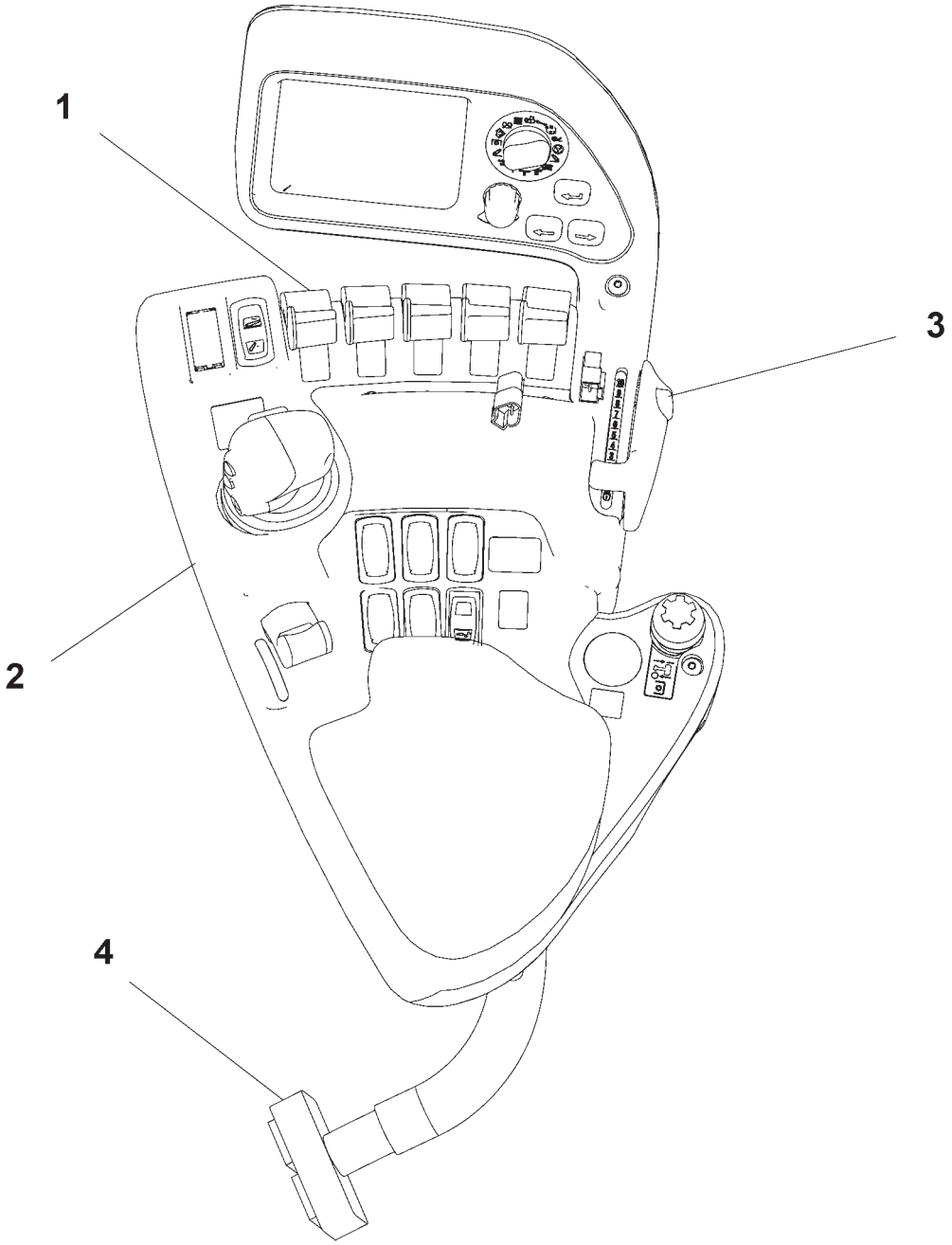

500489D2

ARMREST GP - 500489D2
5 IMP W/PTO-W/HTCH

ITEM	NUMBER	QTY	DESCRIPTION
-	500489D2	--	ARMREST GP (NOT SERVICED)
1	166-4590	1	CONTROL GP (NOT SERIVCED) (SEE BREAKDOWN FOR COMPONENTS)
2	152-0434	1	CONSOLE GP-OPERATOR (A) (NOT SERIVCED) (SEE BREAKDOWN FOR COMPONENTS)
3	152-0445	1	CONTROL GP-HITCH (NOT SERIVCED) (SEE BREAKDOWN FOR COMPONENTS)
4	166-1211	1	WIRING GP-ARMREST (NOT SERIVCED) (SEE BREAKDOWN FOR COMPONENTS)

500489D2
PR: t05i29k58b0522

ARMREST GP - 500490D2
5 IMP W/O PTO-W/O HITCH

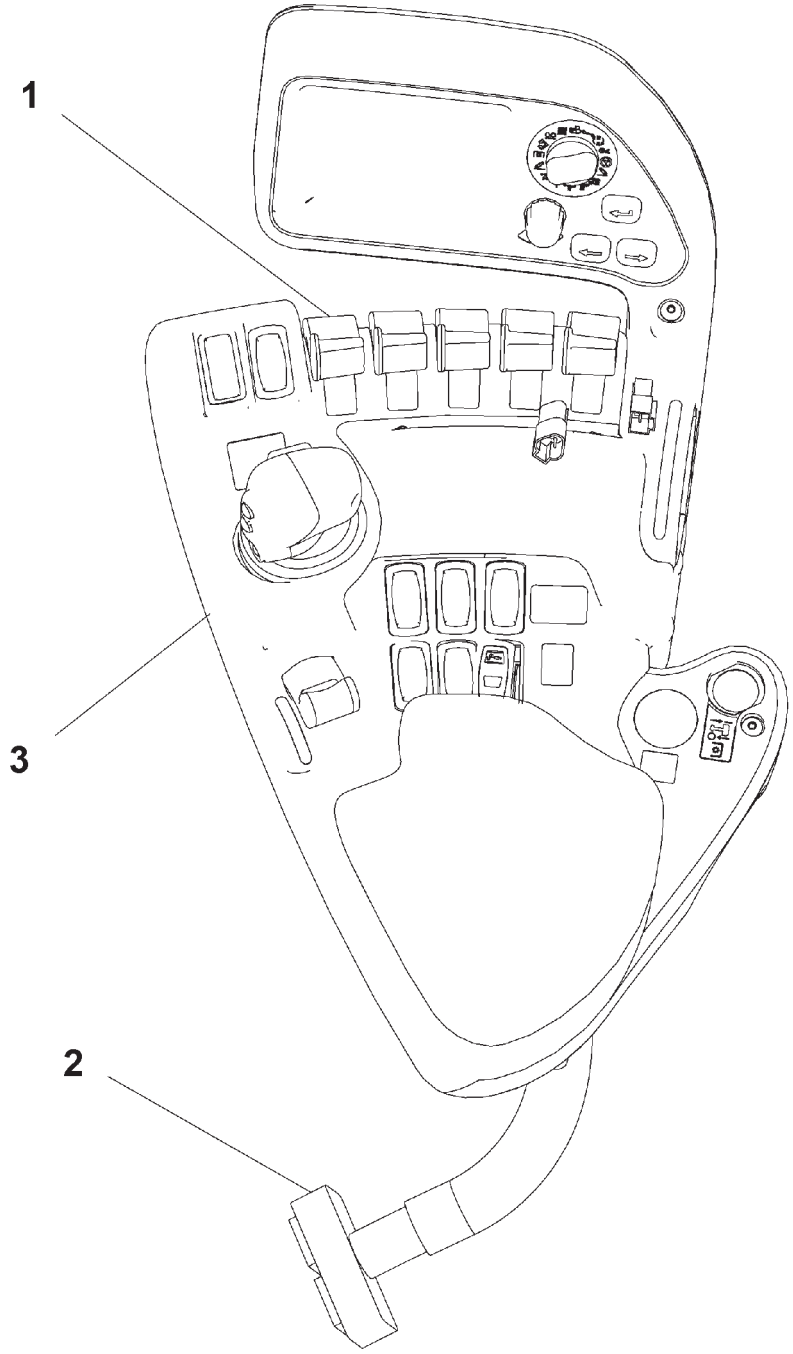

500490D2

ARMREST GP - 500490D2
5 IMP W/O PTO-W/O HITCH

ITEM	NUMBER	QTY	DESCRIPTION
-	500490D2	--	ARMREST GP (NOT SERVICED)
1	166-4590	1	CONTROL GP (NOT SERVICED, (SEE BREAKDOWN FOR COMPONENTS)
2	136-5477	1	WIRING GP-ARMREST (NOT SERIVCED) (SEE BREAKDOWN FOR COMPONENTS)
3	152-0434	1	CONSOLE GP-OPERATOR (A) (NOT SERIVCED) (SEE BREAKDOWN FOR COMPONENTS)

500490D2
PR: t05i29k58b0523

ARMREST GP - 500491D2
5 IMP W/O PTO-W/HITCH

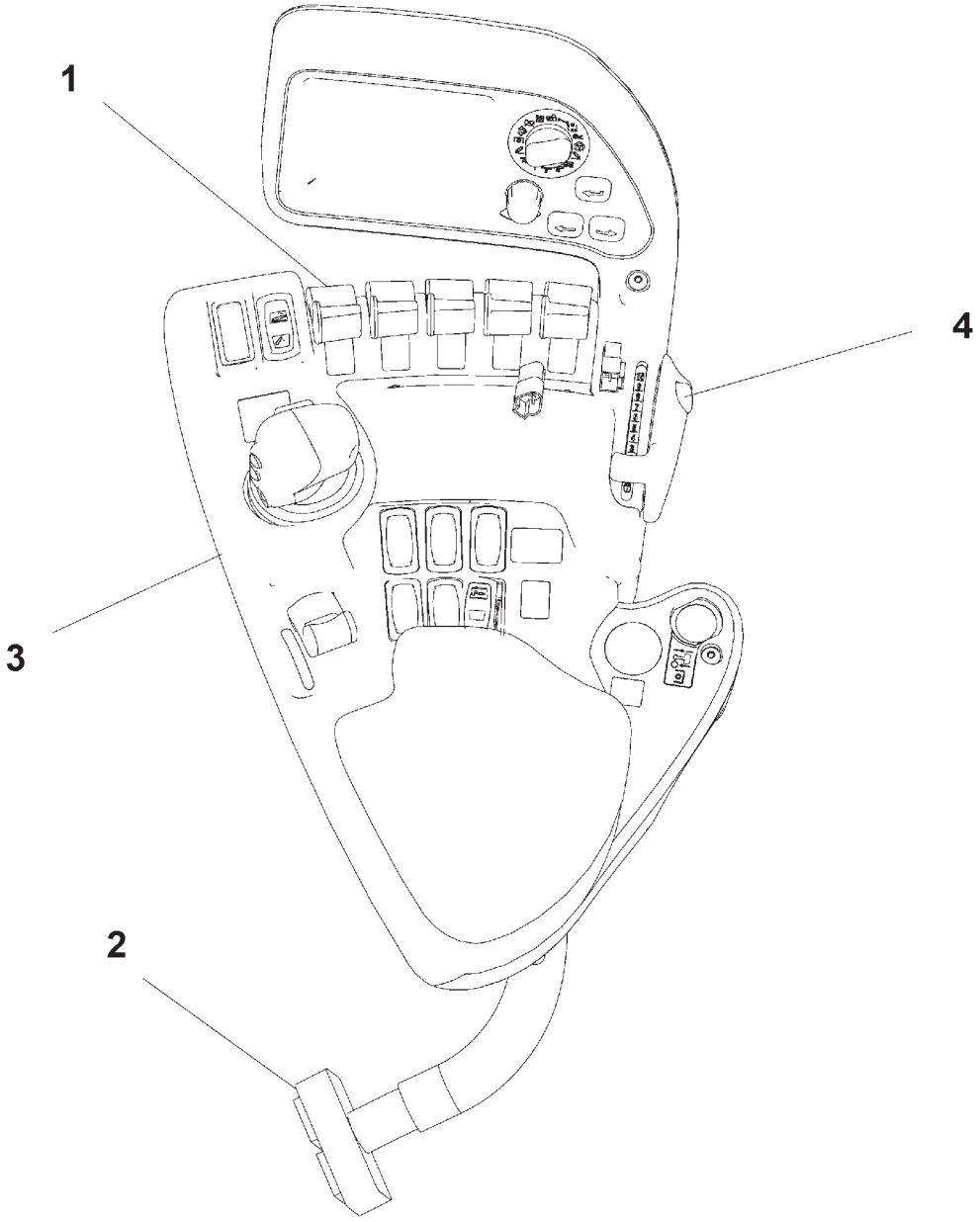

500491D2

ARMREST GP - 500491D2
5 IMP W/O PTO-W/HITCH

ITEM	NUMBER	QTY	DESCRIPTION
-	500491D2	--	ARMREST GP (NOT SERVICED)
1	166-4590	1	CONTROL GP (NOT SERIVCED) (SEE BREAKDOWN FOR COMPONENTS)
2	136-5477	1	WIRING GP-ARMREST (NOT SERIVCED) (SEE BREAKDOWN FOR COMPONENTS)
3	152-0434	1	CONSOLE GP-OPERATOR (A) (NOT SERIVCED) (SEE BREAKDOWN FOR COMPONENTS)
4	152-0445	1	CONTROL GP-HITCH (NOT SERIVCED) (SEE BREAKDOWN FOR COMPONENTS)

500491D2
PR: t05i29k58b0524

ARMREST GP - 500791D2
6 IMP W/PTO-W/O HITCH

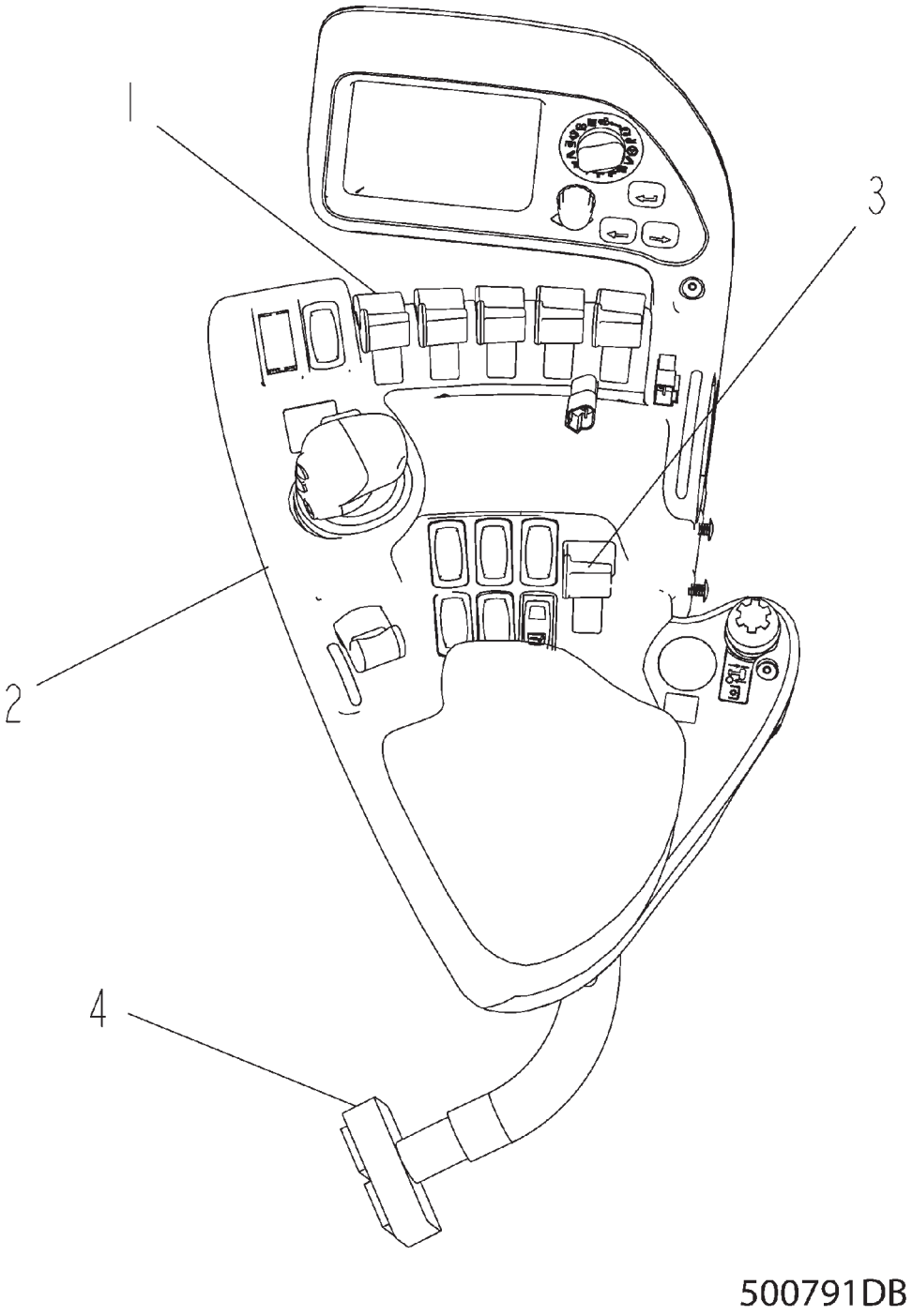

ARMREST GP - 500791D2
6 IMP W/PTO-W/O HITCH

ITEM	NUMBER	QTY	DESCRIPTION
-	500791D2	--	ARMREST GP (NOT SERVICED)
1	166-4590	1	CONTROL GP (NOT SERIVCED) (SEE BREAKDOWN FOR COMPONENTS)
2	152-0434	1	CONSOLE GP-OPERATOR (A) (NOT SERIVCED) (SEE BREAKDOWN FOR COMPONENTS)
3	152-0448	1	CONTROL GP (NOT SERIVCED) (SEE BREAKDOWN FOR COMPONENTS)
4	166-1211	1	WIRING GP-ARMREST (NOT SERIVCED) (SEE BREAKDOWN FOR COMPONENTS)

500791DB
PR: t05i29k58b0525

ARMREST GP - 500792D2
6 IMP W/PTO-W/HITCH

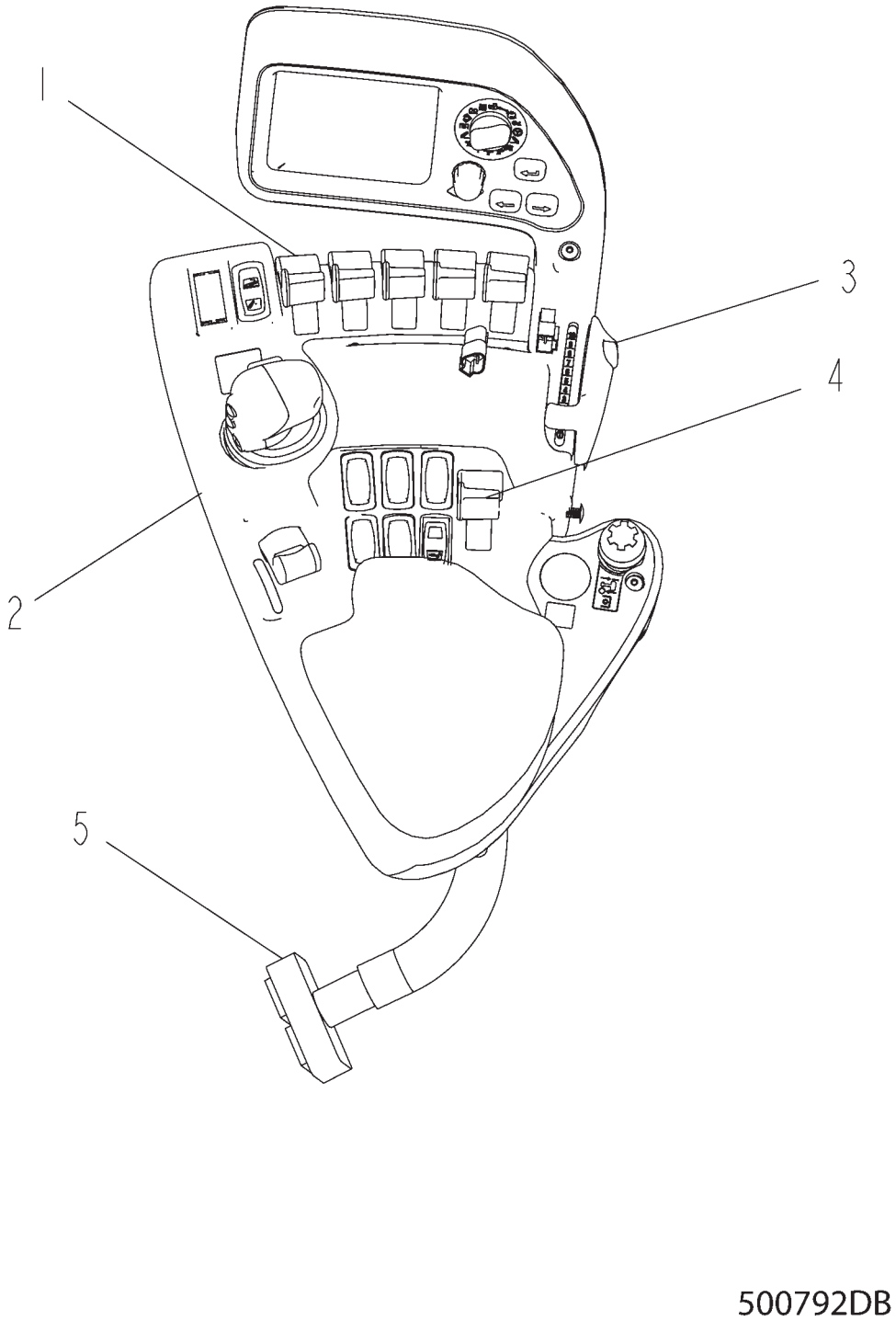

ARMREST GP - 500792D2
6 IMP W/PTO-W/HITCH

ITEM	NUMBER	QTY	DESCRIPTION
-	500792D2	--	ARMREST GP (NOT SERVICED)
1	166-4590	1	CONTROL GP (NOT SERIVCED) (SEE BREAKDOWN FOR COMPONENTS)
2	152-0434	1	CONSOLE GP-OPERATOR (A) (NOT SERIVCED) (SEE BREAKDOWN FOR COMPONENTS)
3	152-0445	1	CONTROL GP-HITCH (NOT SERIVCED) (SEE BREAKDOWN FOR COMPONENTS)
4	152-0448	1	CONTROL GP (NOT SERIVCED) (SEE BREAKDOWN FOR COMPONENTS)
5	166-1211	1	WIRING GP-ARMREST (NOT SERIVCED) (SEE BREAKDOWN FOR COMPONENTS)

500792DB
PR: t05i29k58b0526

ARMREST GP - 500793D2
6 IMP W/O PTO-W/O HITCH

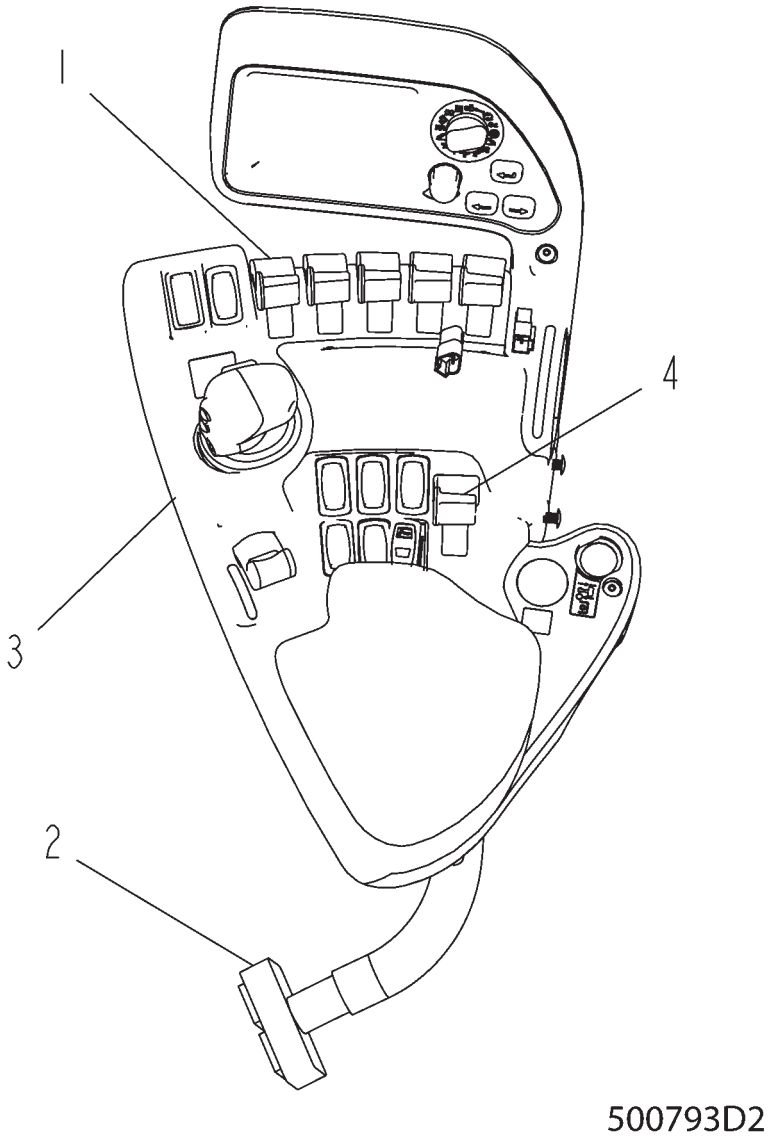

ARMREST GP - 500793D2
6 IMP W/O PTO-W/O HITCH

ITEM	NUMBER	QTY	DESCRIPTION
-	500793D2	--	ARMREST GP (NOT SERVICED)
1	166-4590	1	CONTROL GP (NOT SERIVCED) (SEE BREAKDOWN FOR COMPONENTS)
2	136-5477	1	WIRING GP-ARMREST (NOT SERIVCED) (SEE BREAKDOWN FOR COMPONENTS)
3	152-0434	1	CONSOLE GP-OPERATOR (A) (NOT SERIVCED) (SEE BREAKDOWN FOR COMPONENTS)
4	152-0448	1	CONTROL GP (NOT SERIVCED) (SEE BREAKDOWN FOR COMPONENTS)

500793DB
PR: t05i29k58b0527

ARMREST GP - 500794D2
6 IMP W/O PTO-W/HITCH

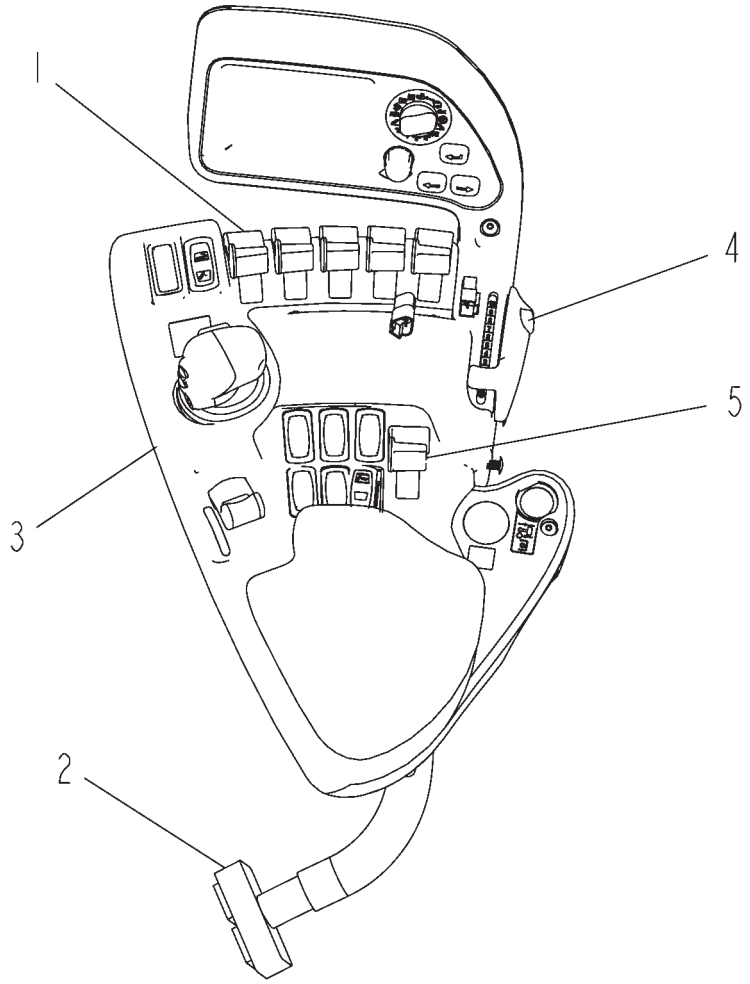

500794DB

ARMREST GP - 500794D2
6 IMP W/O PTO-W/HITCH

ITEM	NUMBER	QTY	DESCRIPTION
-	500794D2	--	ARMREST GP (NOT SERVICED)
1	166-4590	1	CONTROL GP (NOT SERIVCED) (SEE BREAKDOWN FOR COMPONENTS)
2	136-5477	1	WIRING GP-ARMREST (NOT SERIVCED) (SEE BREAKDOWN FOR COMPONENTS)
3	152-0434	1	CONSOLE GP-OPERATOR (A) (NOT SERIVCED) (SEE BREAKDOWN FOR COMPONENTS)
4	152-0445	1	CONTROL GP-HITCH (NOT SERIVCED) (SEE BREAKDOWN FOR COMPONENTS)
5	152-0448	1	CONTROL GP (NOT SERIVCED) (SEE BREAKDOWN FOR COMPONENTS)

500794DB
PR: t05i29k58b0528

SEAT GP-TRAINING - 152-0433

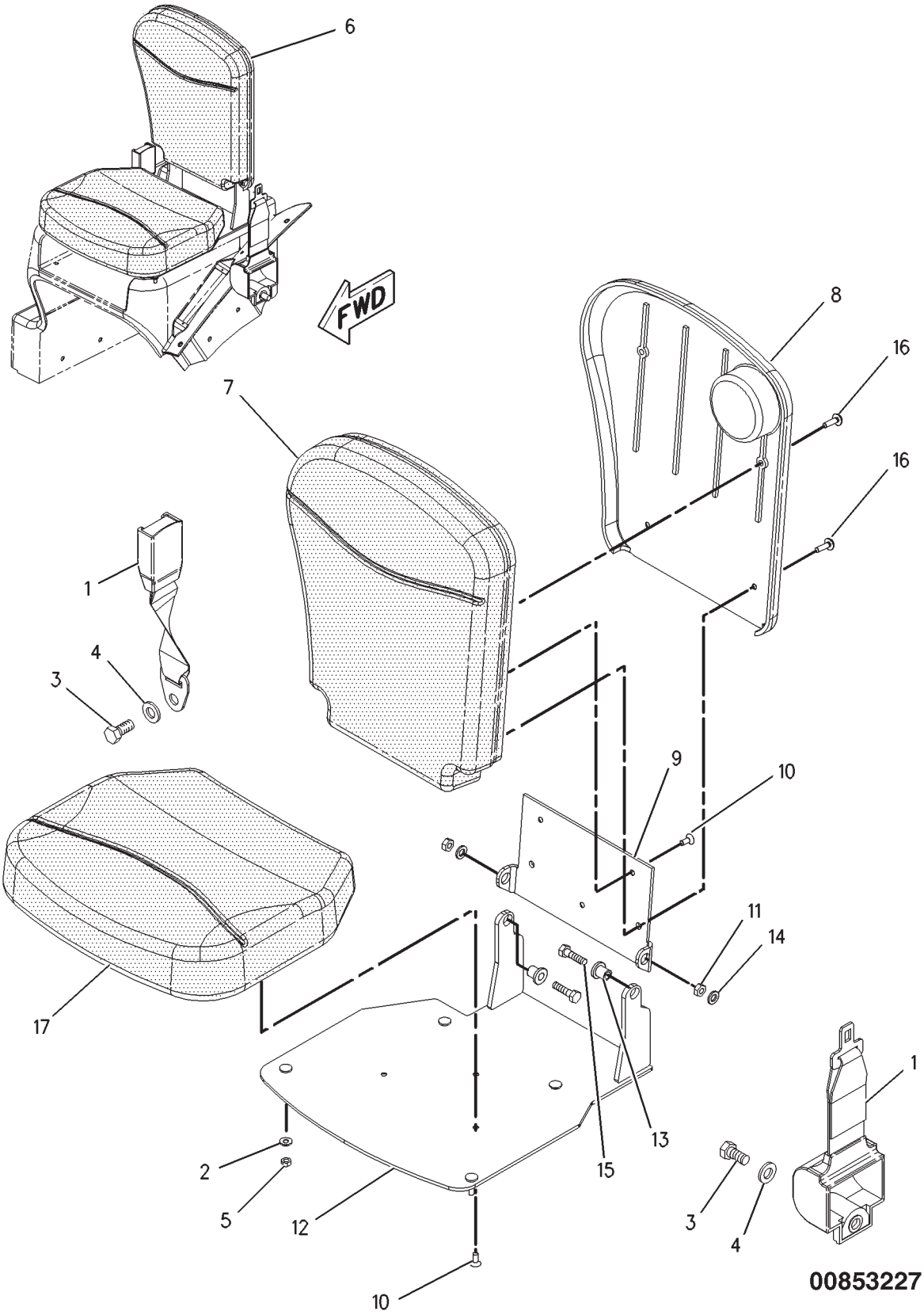

SEAT GP-TRAINING - 152-0433

ITEM	NUMBER	QTY	DESCRIPTION
-	152-0433	--	SEAT GP-TRAINING [A] (NOT SERVICED)
1	185-2151	1	BELT SET
2	CH9X-6165	4	WASHER (6.5X22X2.5)
3	400055X1	2	BOLT (M12X1.75X25MM)
4	400357X1	2	WASHER-HARD (M12X25.5X3)
5	400300X1	4	NUT (M6X1)
6	164-7062	1	SEAT ASM (INCLUDES ITEMS 7-17)
7	162-6758	1	CUSHION-BACK
8	162-6759	1	COVER-BACK
9	178-9244	1	BRACKET-HINGE
10	CH095-0759	6	SCREW-MACHINE (M6X1X16.6)
11	CH8T-7963	2	LOCKNUT (M8X1.25)
12	169-6351	1	BRACKET ASM-HINGE
13	178-9245	2	BUSHING
14	400339X1	2	WASHER-HARD (8.8X16X2)
15	WR520867	2	BOLT (M8X1.25X25MM)
16	CH9X-2044	4	SCREW-TRUSS HEAD (M6X1X16MM)
17	162-6757	1	CUSHION-BASE

[A] PART OF 152-0012; 152-0013;
222-4146; 500841D1 CAB AR

00853227
PR: t05i29k58b0529

SEAT GP-BASIC
500840D1

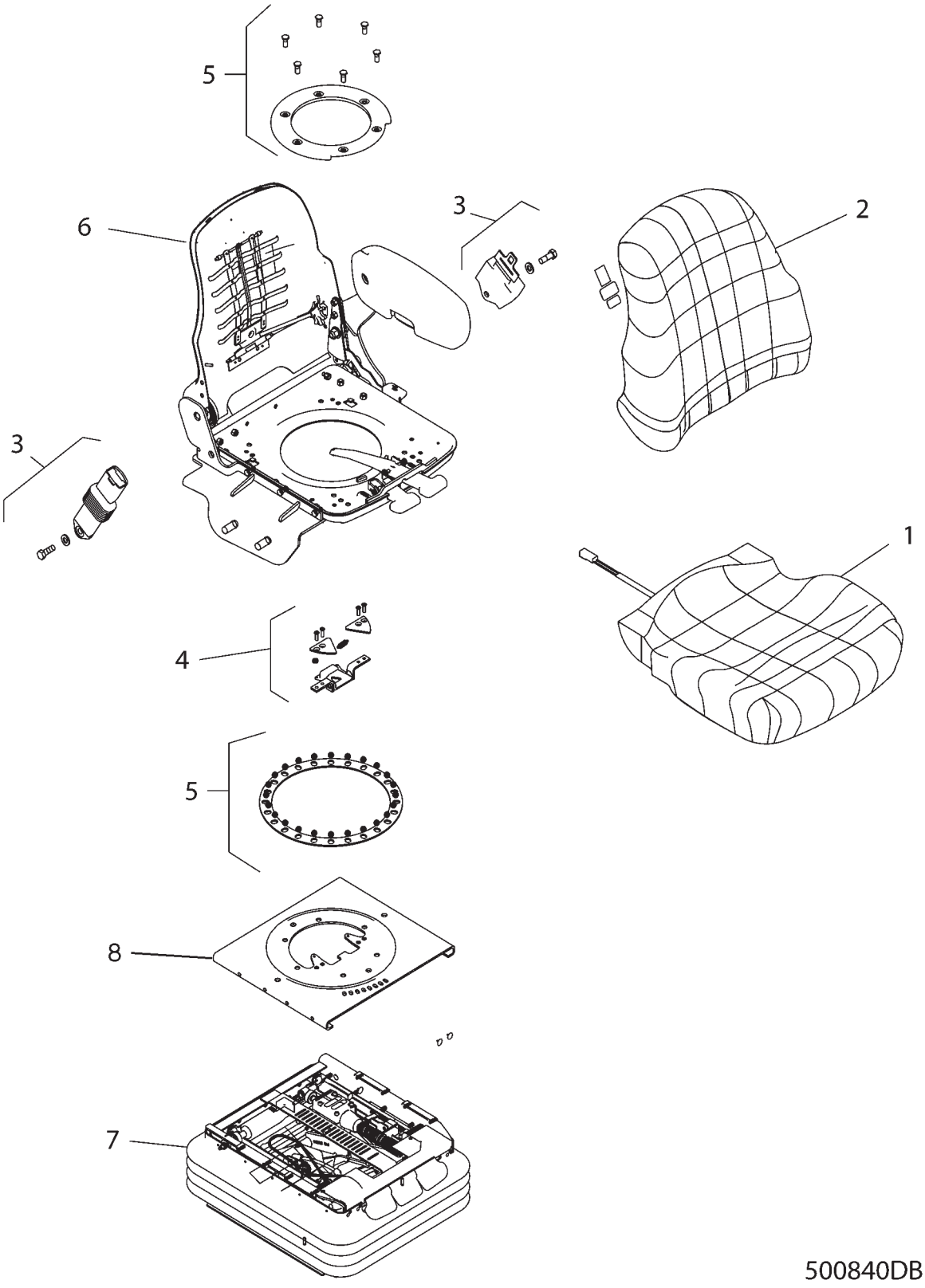

SEAT GP-BASIC
500840D1

ITEM	NUMBER	QTY	DESCRIPTION
-	500840D1	--	SEAT GP-BASIC
1	197-4523	1	KIT-SEAT CUSHION AS. (INCLS SWITCH) (SERVICED AS COMPLETE KIT ONLY)
2	197-4524	1	KIT-BACK CUSHION AS. (INCLS 2 SCREWS) (SERVICED AS COMPLETE KIT ONLY)
3	197-4527	1	KIT-SEAT BELT (SERVICED AS COMPLETE KIT ONLY)
4	197-4529	1	KIT-SLIDE LATCH AS. (SERVICED AS COMPLETE KIT ONLY)
5	197-4550	1	KIT-SWIVEL AS. (UPPER) (SERVICED AS COMPLETE KIT ONLY)
6	220-2329	1	KIT-SEAT AS. (LUMBAR) (SEE BREAKDOWN FOR COMPONENTS)
7	501898D1	1	KIT-SEAT SUSP AS. (SEE BREAKDOWN FOR COMPONENTS)
8	500612D1	1	PLATE WLMT, SWIVEL (LWR)

500840DB
PR: t05i29k58b0530

SEAT GP - DELUXE
500853D1

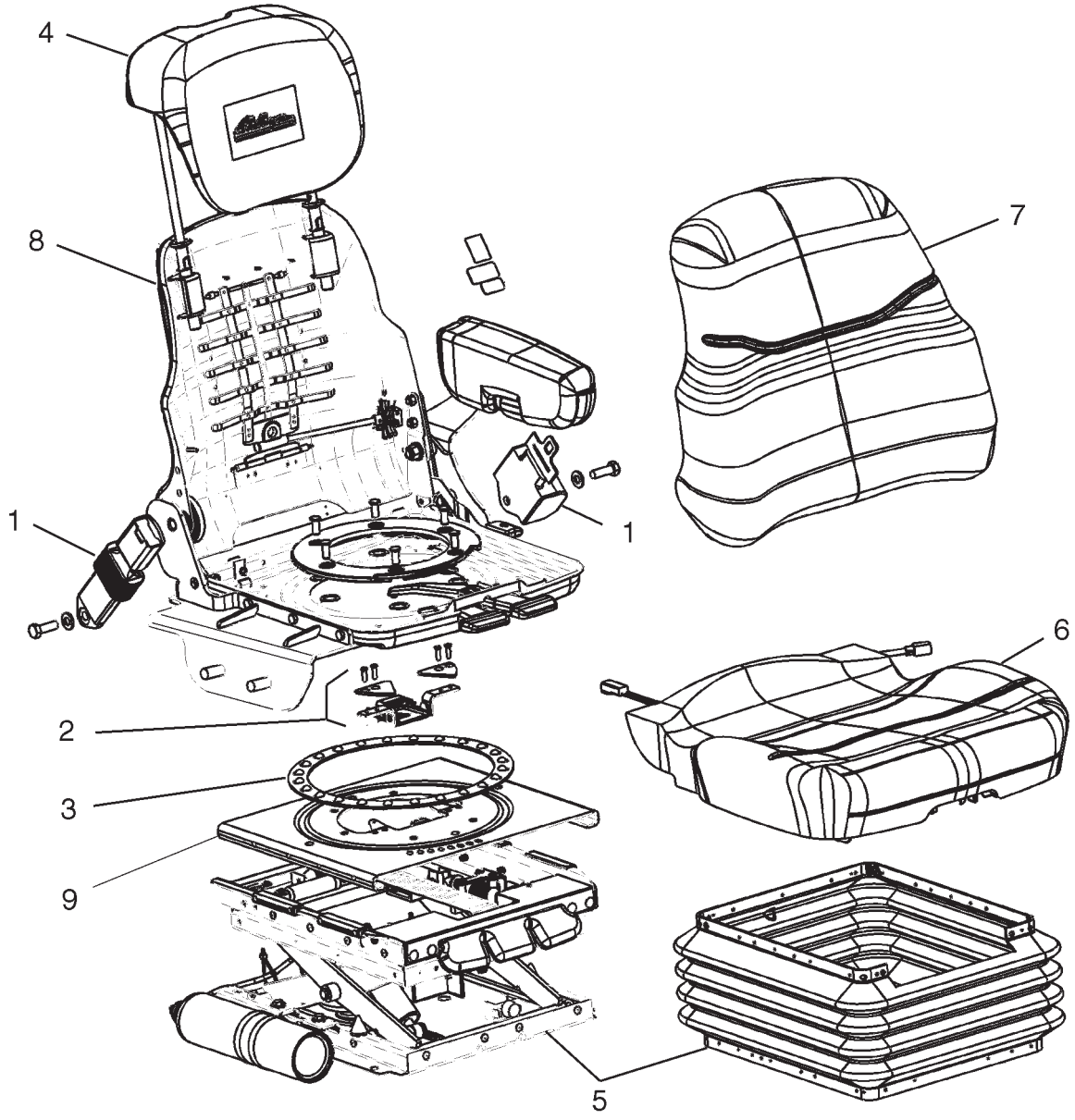

SEAT GP - DELUXE
500853D1

ITEM	NUMBER	QTY	DESCRIPTION
-	500853D1	--	SEAT GP-DELUXE
1	197-4527	1	KIT-SEAT BELT (SERVICED AS COMPLETE KIT ONLY)
2	197-4529	1	KIT-SLIDE LATCH AS. (SERVICED AS COMPLETE KIT ONLY)
3	197-4550	1	KIT-SWIVEL AS. (UPPER) (SERVICED AS COMPLETE KIT ONLY)
4	501908D1	1	KIT-HEAD REST AS. (SERVICED AS COMPLETE KIT ONLY)
5	501909D1	1	KIT-SEAT SUSP AS. (SEE BREAKDOWN FOR COMPONENTS)
6	501910D1	1	KIT-SEAT CUSHION AS. (SERVICED AS COMPLETE KIT ONLY)
7	501911D1	1	KIT-BACK CUSHION AS. (SERVICED AS COMPLETE KIT ONLY)
8	501912D1	1	KIT-SEAT AS. (LUMBAR) (SEE BREAKDOWN FOR COMPONENTS)
9	500612D1	1	PLATE WLMT-SWIVEL (LOWER)

500853DB
PR: t05i29k58b0531

KIT-SEAT AS (LUMBAR) - BASIC
220-2329

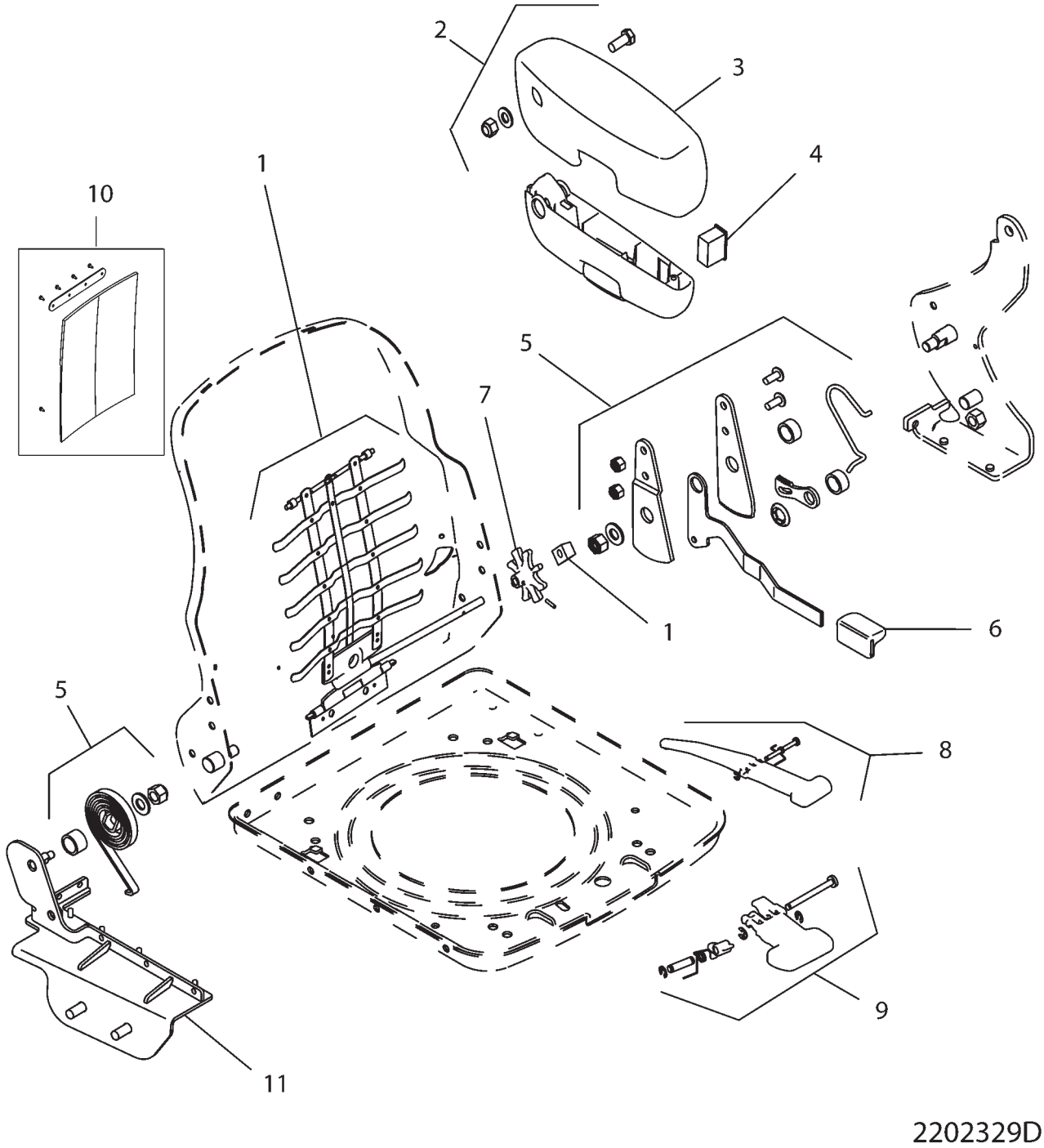

KIT-SEAT AS (LUMBAR) - BASIC
220-2329

ITEM	NUMBER	QTY	DESCRIPTION
-	220-2329	--	KIT-SEAT ASM [A] (INCLS 1-11)
1	197-4516	1	KIT-LUMBAR AS. (SERVICED AS COMPLETE KIT ONLY)
2	197-4517	1	KIT-ARMREST AS., LH (INCLS IT 3) (SERVICED AS COMPLETE KIT ONLY)
3	197-4518	1	KIT-ARMREST (SERVICED AS COMPLETE KIT ONLY)
4	197-4519	1	KIT-SWITCH (HEIGHT ADJUSTMENT) (SERVICED AS COMPLETE KIT ONLY)
5	197-4520	1	KIT-RECLINER AS. (INCLS IT 6) (SERVICED AS COMPLETE KIT ONLY)
6	197-4521	1	KIT-KNOB (BACKREST ANGLE ADJUSTMENT) (SERVICED AS COMPLETE KIT ONLY)
7	197-4522	1	KIT-KNOB-LUMBAR ADJ. (INCLS ROLL PIN) (SERVICED AS COMPLETE KIT ONLY)
8	197-4525	1	KIT-LEVER (FORE/AFT ADJUSTMENT) (SERVICED AS COMPLETE KIT ONLY)
9	197-4526	1	KIT-LEVER (SWIVEL) (SERVICED AS COMPLETE KIT ONLY)
10	227-9744	1	KIT-MANUAL HOLDER (SERVICED AS COMPLETE KIT ONLY)
11	220-2333	1	KIT-BRACKET AS (SEE RH CONSOLE FOR SUPT) (SERVICED AS COMPLETE KIT ONLY)

[A] PART OF 161-9200 SEAT GP-SUSPENSION
PART OF 500840D1 SEAT GP-BASIC

2202329D
PR: t05i29k58b0532

KIT-SEAT AS (LUMBAR) - DELUXE
501912D1

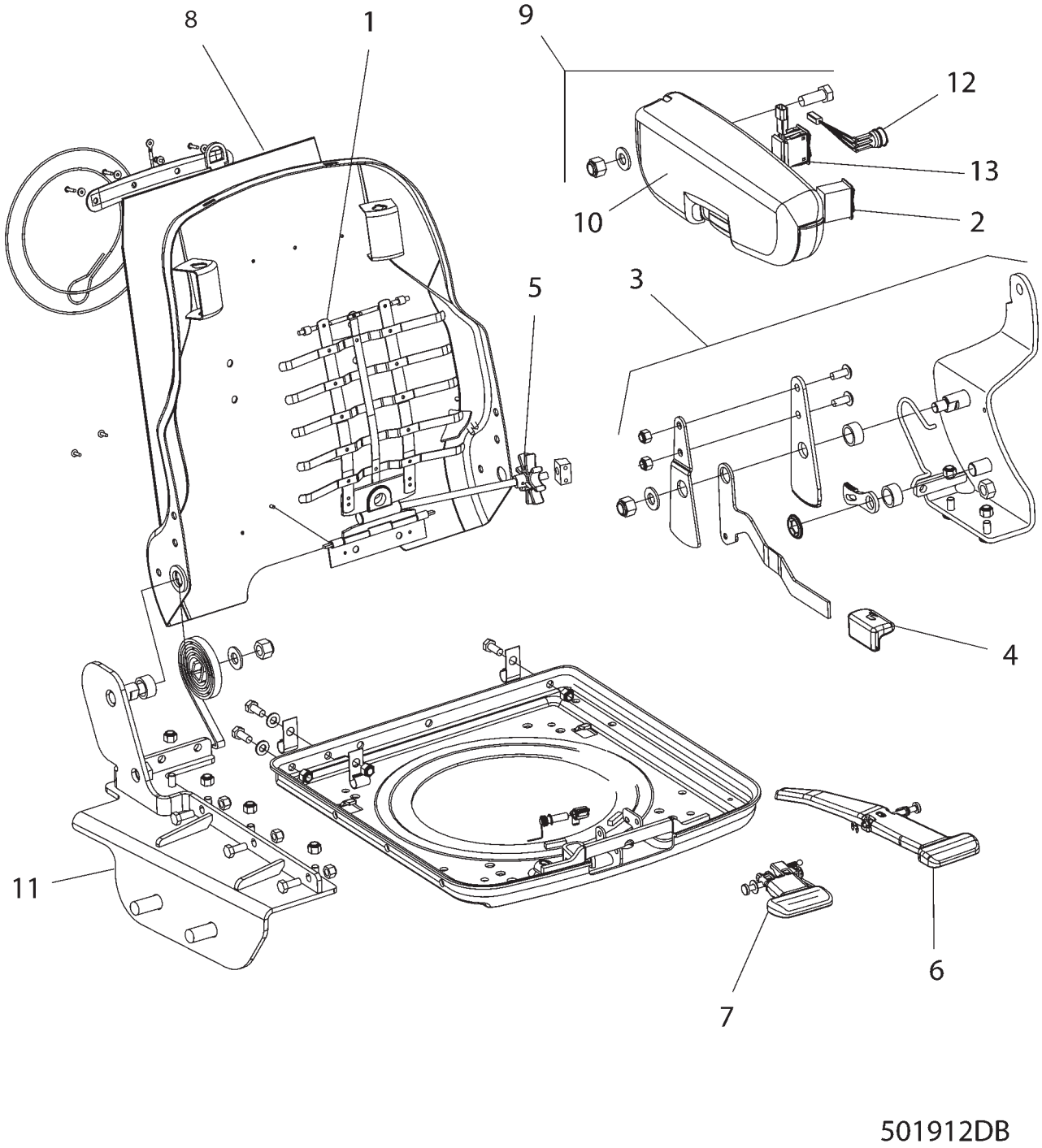

KIT-SEAT AS (LUMBAR) - DELUXE
501912D1

ITEM	NUMBER	QTY	DESCRIPTION
-	501912D1	--	KIT-SEAT AS.-LUMBAR (COMPLETE) [A]
1	197-4516	1	KIT-LUMBAR AS. (SERVICED AS COMPLETE KIT ONLY)
2	197-4519	1	KIT-SWITCH (HEIGHT ADJUSTMENT) (SERVICED AS COMPLETE KIT ONLY)
3	197-4520	1	KIT-RECLINER AS. (INCLS IT 4) (SERVICED AS COMPLETE KIT ONLY)
4	197-4521	1	KIT-RECLINER KNOB (SERVICED AS COMPLETE KIT ONLY)
5	197-4522	1	KIT-LUMBAR KNOB (SERVICED AS COMPLETE KIT ONLY)
6	197-4525	1	KIT-LEVER AS. (SERVICED AS COMPLETE KIT ONLY)
7	197-4526	1	KIT-LEVER AS. (SERVICED AS COMPLETE KIT ONLY)
8	501899D1	1	KIT-MANUAL HOLDER (SERVICED AS COMPLETE KIT ONLY)
9	501913D1	1	KIT-ARMREST AS. (LH) (INCLS IT 10) (SERVICED AS COMPLETE KIT ONLY)
10	501914D1	1	KIT-ARMREST (LH) (FORMED CUSHION ONLY) (SERVICED AS COMPLETE KIT ONLY)
11	501915D1	1	KIT-BRACKET WLMT.
12		1	NOT USED
13	501921D1	1	KIT-RIDE CONTROL SWITCH (INCLS HARNESS) [B] (SERVICED AS COMPLETE KIT ONLY)

[A] PART OF 500853D1 SEAT GP.-DELUXE
[B] KIT NOT IN GP. SEE 501916D1 SUSP GP.

501912DB
PR: t05i29k58b0533

KIT-SEAT SUSPENSION - BASIC
501898D1

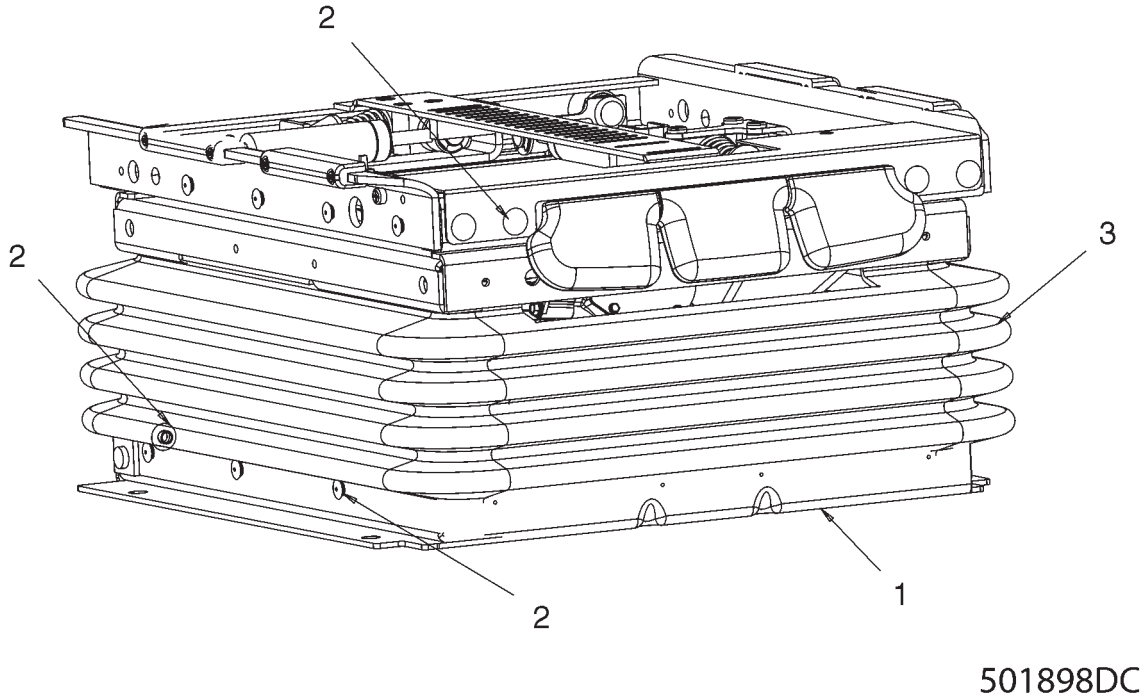

KIT-SEAT SUSPENSION - BASIC
501898D1

ITEM	NUMBER	QTY	DESCRIPTION
-	501898D1	--	KIT-SEAT SUSPENSION [A]
1	501900D1	1	SUSPENSION GP-SEAT (SEE BREAKDOWN FOR COMPONENTS)
2	197-4544	1	KIT-FASTENER (SERVICED AS COMPLETE KIT ONLY)
3	197-4546	1	KIT-BOOT (SERVICED AS COMPLETE KIT ONLY)

[A] PART OF 500840D1 SEAT GP-BASIC

501898DC
PR: t05i29k58b0534

KIT-SEAT SUSPENSION - DELUXE
501909D1

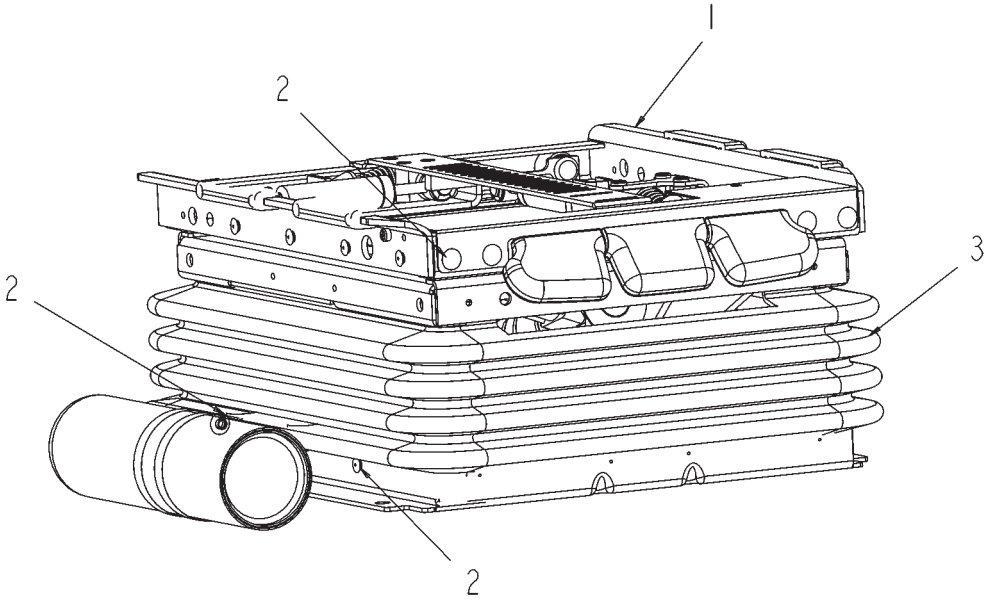

501909DB

KIT-SEAT SUSPENSION - DELUXE
501909D1

ITEM	NUMBER	QTY	DESCRIPTION
-	501909D1	--	KIT-SEAT SUSPENSION [A]
1	501916D1	1	SUSPENSION GP-SEAT (SEE BREAKDOWN FOR COMPONENTS)
2	197-4544	1	KIT-FASTENER (SERVICED AS COMPLETE KIT ONLY)
3	197-4546	1	KIT-BOOT (SERVICED AS COMPLETE KIT ONLY)

[A] PART OF 500853D1 SEAT GP-DELUXE

501909DB
PR: t05i29k58b0535

KIT-SUSPENSION GP-BASIC SEAT
501900D1

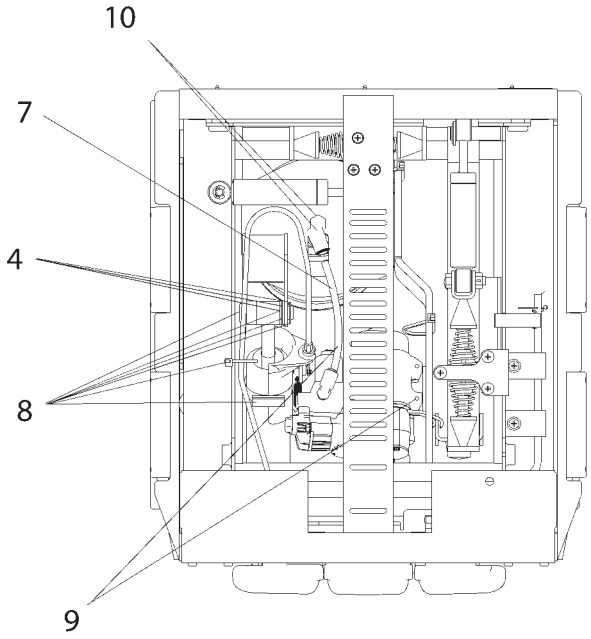

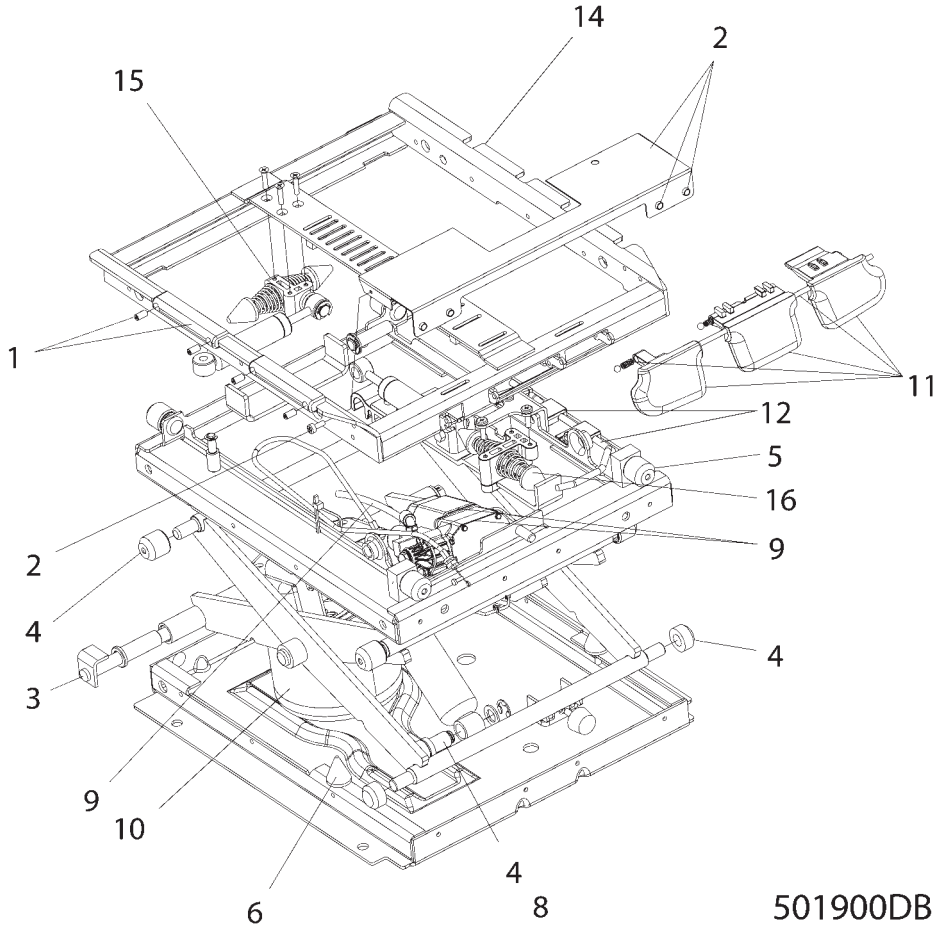

KIT-SUSPENSION GP-BASIC SEAT
501900D1

ITEM	NUMBER	QTY	DESCRIPTION
-	501900D1	--	KIT-SUSPENSION GP-SEAT [A]
1	197-4530	1	KIT-PUCK AS. (SLIDE) (SERVICED AS COMPLETE KIT ONLY)
2	197-4531	1	KIT-COVER PLATE AS. (SERVICED AS COMPLETE KIT ONLY)
3	197-4532	1	KIT-BEARING SHAFT (SERVICED AS COMPLETE KIT ONLY)
4	197-4533	1	KIT-ROLLER BEARINGS (SERVICED AS COMPLETE KIT ONLY)
5	197-4534	1	KIT-ISOLATOR ROLLER (SERVICED AS COMPLETE KIT ONLY)
6	197-4537	1	KIT-BUMPER AS. (SUSP) (SERVICED AS COMPLETE KIT ONLY)
7	197-4538	1	KIT-AIRLINE AS. (INCLS TUBE & FITTINGS) (SERVICED AS COMPLETE KIT ONLY)
8	197-4539	1	KIT-SHOCK AS. (SUSP) (SERVICED AS COMPLETE KIT ONLY)
9	197-4540	1	KIT-COMPRESSOR AS (SERVICED AS COMPLETE KIT ONLY)
10	197-4541	1	KIT-AIR SPRING AS. (SERVICED AS COMPLETE KIT ONLY)
11	197-4545	1	KIT-KNOBS AS. (SERVICED AS COMPLETE KIT ONLY)
12	197-4547	1	KIT-FORE/AFT (SERVICED AS COMPLETE KIT ONLY)
13	501902D1	1	KIT-HARNESS (SUSPENSION) (NOT SHOWN) (SERVICED AS COMPLETE KIT ONLY)
14	501903D1	1	FRAME WLMT, ISOLATOR-LATERAL
15	501906D1	1	KIT-SPRING & SHOCK AS. (INCLS SCREWS & RETAINING RING) (SERVICED COMPLETE)
16	501907D2	1	KIT-SPRING & SHOCK AS. (SERVICED AS COMPLETE KIT ONLY)

[A] PART OF 501898D1 KIT-SEAT SUSPENSION

501900DB
PR: t05i29k58b0536

KIT-SUSPENSION GP - DELUXE SEAT
501916D1

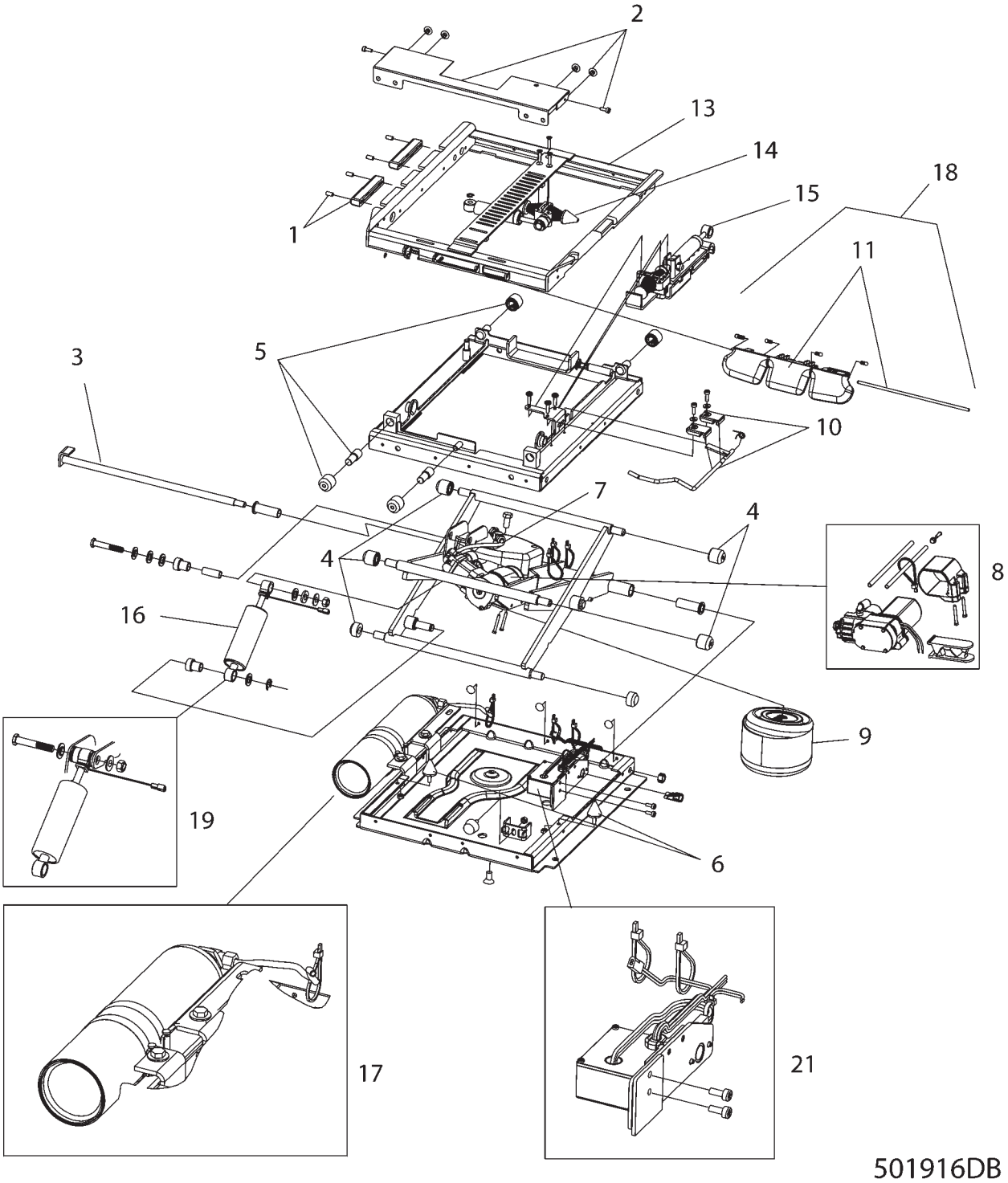

KIT-SUSPENSION GP - DELUXE SEAT
501916D1

ITEM	NUMBER	QTY	DESCRIPTION
-	501916D1	--	KIT-SUSPENSION GP (SEAT) [A]
1	197-4530	1	KIT-PUCK AS. (SLIDE) (SERVICED AS COMPLETE KIT ONLY)
2	197-4531	1	KIT-COVER PLATE AS. (SERVICED AS COMPLETE KIT ONLY)
3	197-4532	1	KIT-BEARING SHAFT (SERVICED AS COMPLETE KIT ONLY)
4	197-4533	1	KIT-ROLLER BEARINGS (SERVICED AS COMPLETE KIT ONLY)
5	197-4534	1	KIT-ISOLATOR ROLLER (SERVICED AS COMPLETE KIT ONLY)
6	197-4537	1	KIT-BUMPER AS. (SUSP) (SERVICED AS COMPLETE KIT ONLY)
7	197-4538	1	KIT-AIRLINE AS. (INCLS TUBE & FITTINGS) (SERVICED AS COMPLETE KIT ONLY)
8	197-4540	1	KIT-COMPRESSOR AS (SERVICED AS COMPLETE KIT ONLY)
9	197-4541	1	KIT-AIR SPRING AS. (SERVICED AS COMPLETE KIT ONLY)
10	197-4547	1	KIT-FORE/AFT (SERVICED AS COMPLETE KIT ONLY)
11	197-4548	1	KIT-CONTROL(LATERAL (SERVICED AS COMPLETE KIT ONLY)
12	501902D1	1	KIT-HARNESS (SUSPENSION) (NOT SHOWN) (SERVICED AS COMPLETE KIT ONLY)
13	501903D1	1	FRAME WLMT, ISOLATOR-LATERAL
14	501906D1	1	KIT-SPRING & SHOCK AS. (INCLS SCREWS & RETAINING RING) (SERVICED COMPLETE)
15	501907D2	1	KIT-SPRING & SHOCK AS. (SERVICED AS COMPLETE KIT ONLY)
16	501917D1	1	SHOCK (SUSP) (SHOCK ONLY)
17	501918D1	1	KIT-AIR TANK (W/FITTINGS, LINES, CLAMPS AND BRACKET) (SERVICED AS COMPLETE KIT ONLY)
18	501919D1	1	KIT-KNOB AS. (SUSP) (INCLS ITEM 11) (SERVICED AS COMPLETE KIT ONLY)
19	501920D1	1	KIT-CONTROL AS. (SHOCK) (INCLS ITEM 16) (SERVICED AS COMPLETE KIT ONLY)
20	501921D1	1	KIT-RIDE CNTRL SWITCH (INCL HARNESS) [B] (NOT SHOWN) (SERVICED AS KIT ONLY)
21	501922D1	1	KIT-CONTROL DAMPER (SERVICED AS COMPLETE KIT ONLY)

[A] PART OF 501909D1 KIT-SEAT SUSPENSION
[B] SWITCH ON LH ARMREST. REFER TO 501912D1 KIT SEAT-LUMBAR-DELUXE

501916DB
PR: t05i29k58b0537

SPEAKER GP-RADIO
152-0419

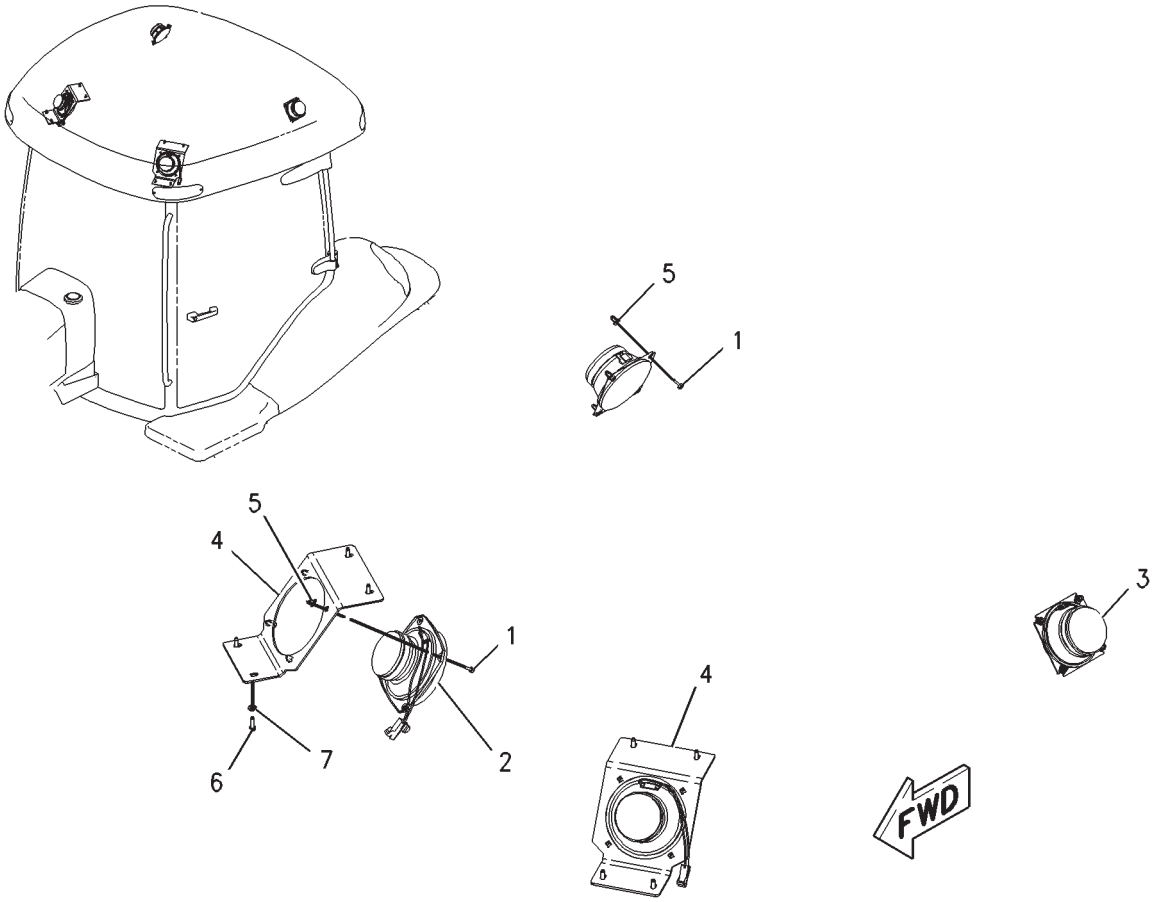

00870222

SPEAKER GP-RADIO
152-0419

ITEM	NUMBER	QTY	DESCRIPTION
-	502794D1	--	SPEAKER GP-RADIO (NOT SERVICED) (ROW & SPECIAL ONLY)
-	152-0419	--	SPEAKER GP-RADIO [A] (REF ONLY) (NOT SERVICED)
1	CH119-5026	16	SCREW-PAN HEAD (10-16X0.63 IN)
2	CH136-5414	2	SPEAKER (FRONT)
3	CH136-5415	2	SPEAKER (REAR)
4	195-2612	2	BRACKET
5	400086X1	16	NUT, EXPANSION (7MM)(PLASTIC)
6	CH110-2028	8	SCREW-PAN HEAD (10-14X.75 IN)
7	400310X1	8	WASHER (6.6X12X2)

[A] PART OF 152-0012; 222-4146
500841D1 CAB AR;
502794D1 SPEAKER GP

00870222
PR: t05i29k58b0538

SPEAKER GP-RADIO - SUBWOOFER
173-6506

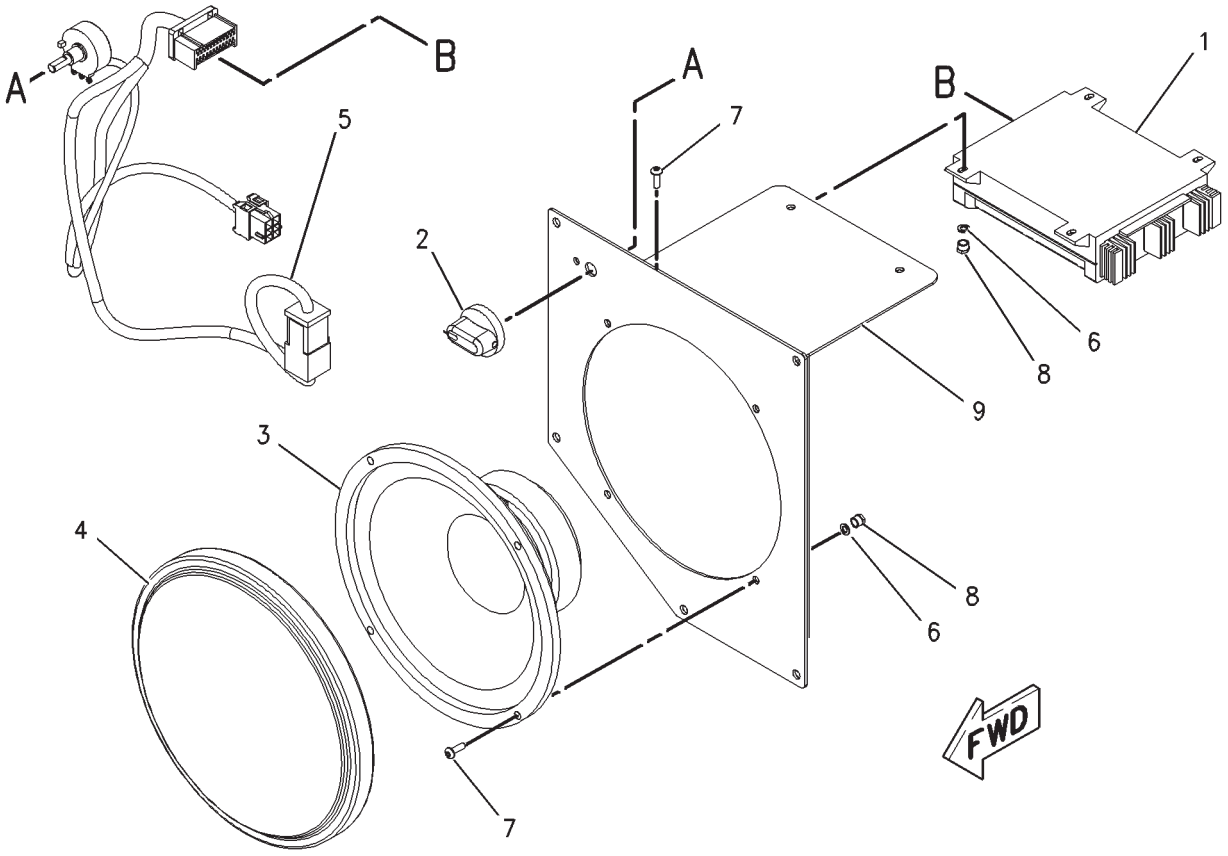

00786642

SPEAKER GP-RADIO - SUBWOOFER
173-6506

ITEM	NUMBER	QTY	DESCRIPTION
-	173-6506	--	SPEAKER GP-RADIO (NOT SERVICED)
1	CH136-5434	1	AMPLIFIER ASM
2	500419D1	1	KNOB-CONTROL (BASS VOLUME)
3	170-7255	1	SPEAKER
4	172-6842	1	GRILL
5	502191D1	1	HARNESS (SUBWOOFER)
6	CH8C-9660	8	WASHER (4.6X7.9X0.8)
7	CH7Y-3173	8	SCREW-BUTTON HEAD (M4X0.7X12MM)
8	CH8T-2659	8	LOCKNUT (M4X0.7)
9	189-9922	1	PLATE ASM

00786642
PR: t05i29k58b0539

STEERING COLUMN GP - CH166-3611

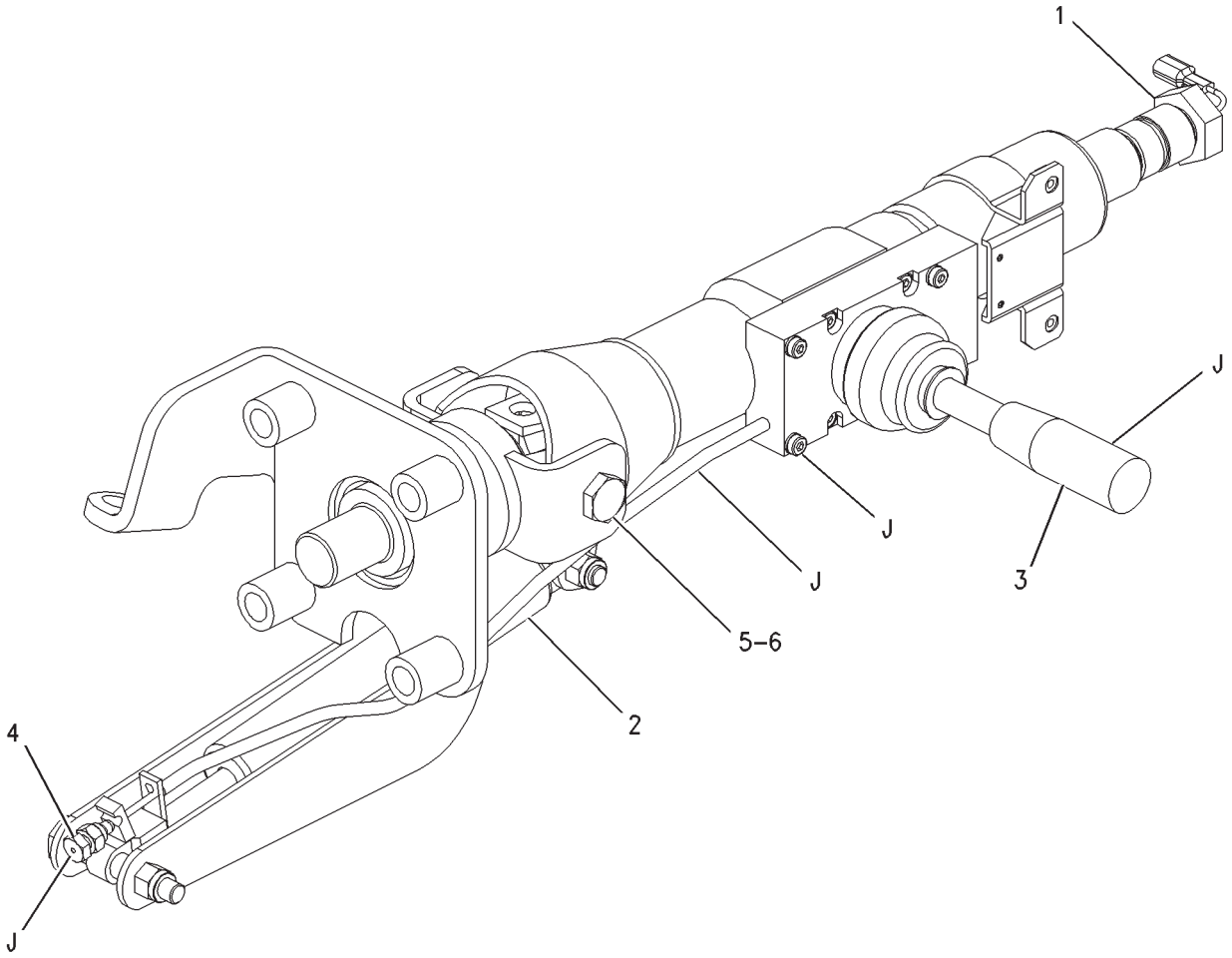

00830593

STEERING COLUMN GP - CH166-3611

ITEM	NUMBER	QTY	DESCRIPTION
-	CH166-3611	--	STEERING COLUMN GP [A]
1	CH169-3261	1	NUT (M18X1.5)
2	CH162-8550	1	KIT-GAS STRUT (STEERING COLUMN)
3	CH191-3701	1	KIT-STEERING COLUMN TILT/TELESCOPE (INCLS. ITEMS MARKED "J")
4	CH185-3886	1	CLAMP ASM-CABLE
5	CH196-3699	2	PIN-PIVOT
6	CH196-3698	2	BUSHING-PIVOT

[A] PART OF 500768D1 CONSOLE GP

00830593
PR: t05i29k58b0540

TRIM GP-CAB - 224-3917
1 OF 2

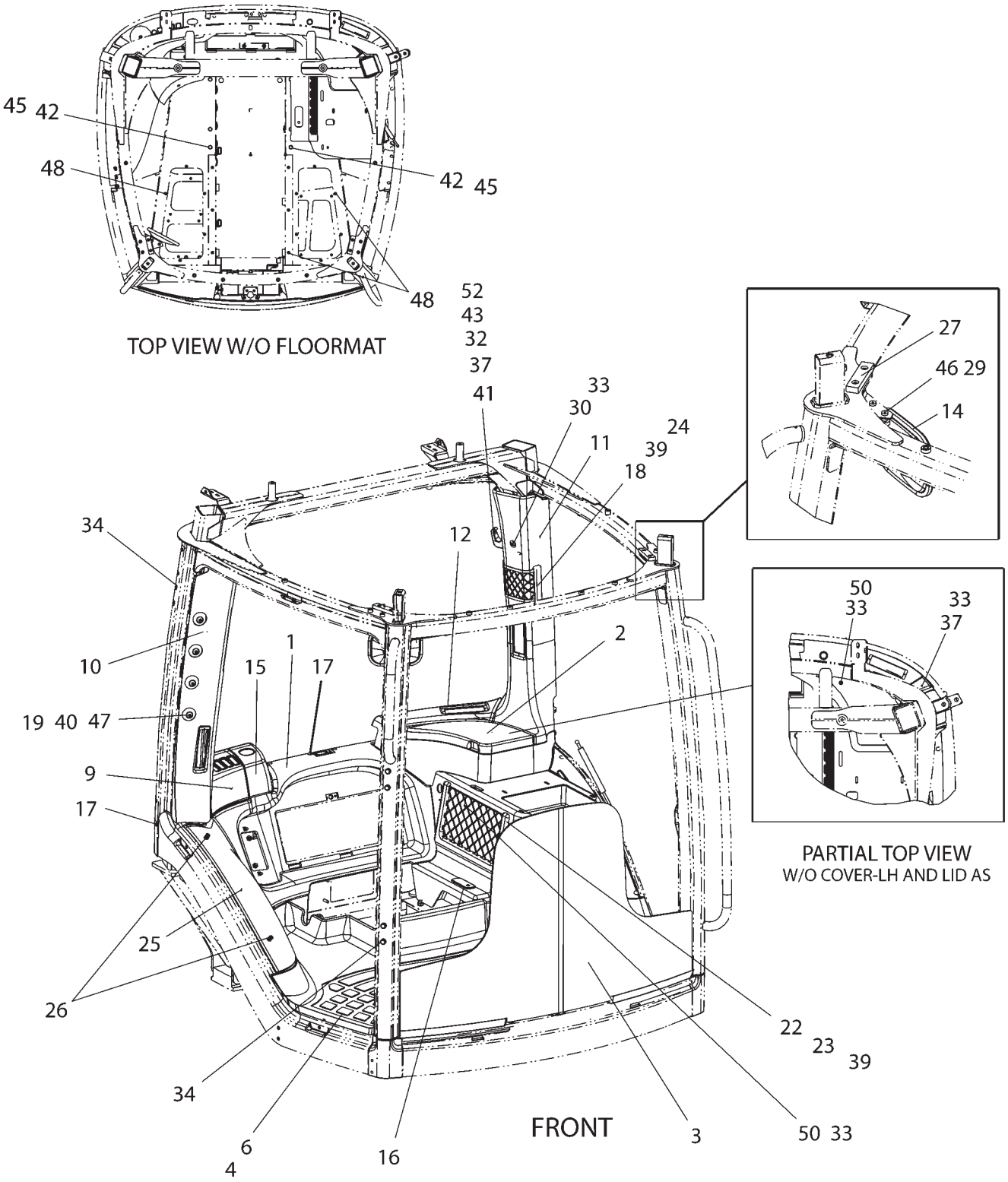

2243917A

TRIM GP-CAB - 224-3917

ITEM	NUMBER	QTY	DESCRIPTION
-	224-3917	--	TRIM GP [A]
1	162-6751	1	CONSOLE AS-CENTER
2	179-2957	1	LID AS
3	227-4312	1	MAT-FRONT GLASS
4	227-4313	1	MAT-FLOOR
6	152-0431	1	FLOOR MAT
9	164-7069	1	COVER
10	169-6342	1	COVER AS (RH)
11	169-6343	1	COVER AS (LH)
12	169-6344	1	COMPARTMENT AS
14	CH169-6352	1	MIRROR (INTERIOR CAB)
15	169-6383	1	COVER-WIRE
16	174-5774	1	GROMMET-BRAKE
17	400110X1	16	FASTENER
18	174-5788	2	RETAINER
19	CH174-5789	4	PLUG-MONITOR
22	180-2825	1	RETAINER
23	184-1704	1	HOLDER-STORAGE
24	190-8326	1	HOLDER-STORAGE
25	197-5852	1	COVER AS
26	CH197-5854	2	LATCH
27	CH217-2132	2	SEAL
29	CH096-6166	2	WASHER-HARD (4.5X9X1MM THK)
30	CH111-4627	1	SCREW-MACHINE (M6X1.0X30MM)
32	CH129-3178	2	LOCKNUT (M6X1 THD)
33	400085X1	8	NUT-RETAINER (M6X1X1.63-3.8 PANEL)
34	CH193-5914	6	PLUG
37	CH3E-8020	2	SCREW-TRUSS HEAD (M6X1X25MM)
39	CH5V-1496	9	RETAINER
40	CH6V-5839	4	WASHER (11X21X2.5MM THK)
41	CH6V-8928	1	HOOK-COAT
42	400039X1	6	BOLT (M10X1.5X25MM)
43	400221X1	1	BOLT (M6X1X20MM)
45	CH8T-7934	6	WASHER (11X21X5MM THK)
46	CH9X-1046	2	SCREW (M4X0.7X18MM)
47	CH9X-2040	6	SCREW-TRUSS HEAD (M10X1.5X25MM)
48	CH9X-2042	21	SCREW-TRUSS HEAD (M6X1X12MM)
50	CH9X-2045	5	SCREW-TRUSS HEAD (M6X1X20MM)
52	400310X1	2	WASHER

[A] PART OF 500841D1;500842D1;500843D1;
500844D1; 500849D1 CAB AR

2243917A
PR: t05i29k58b0541

TRIM GP-CAB - 224-3917
2 OF 2

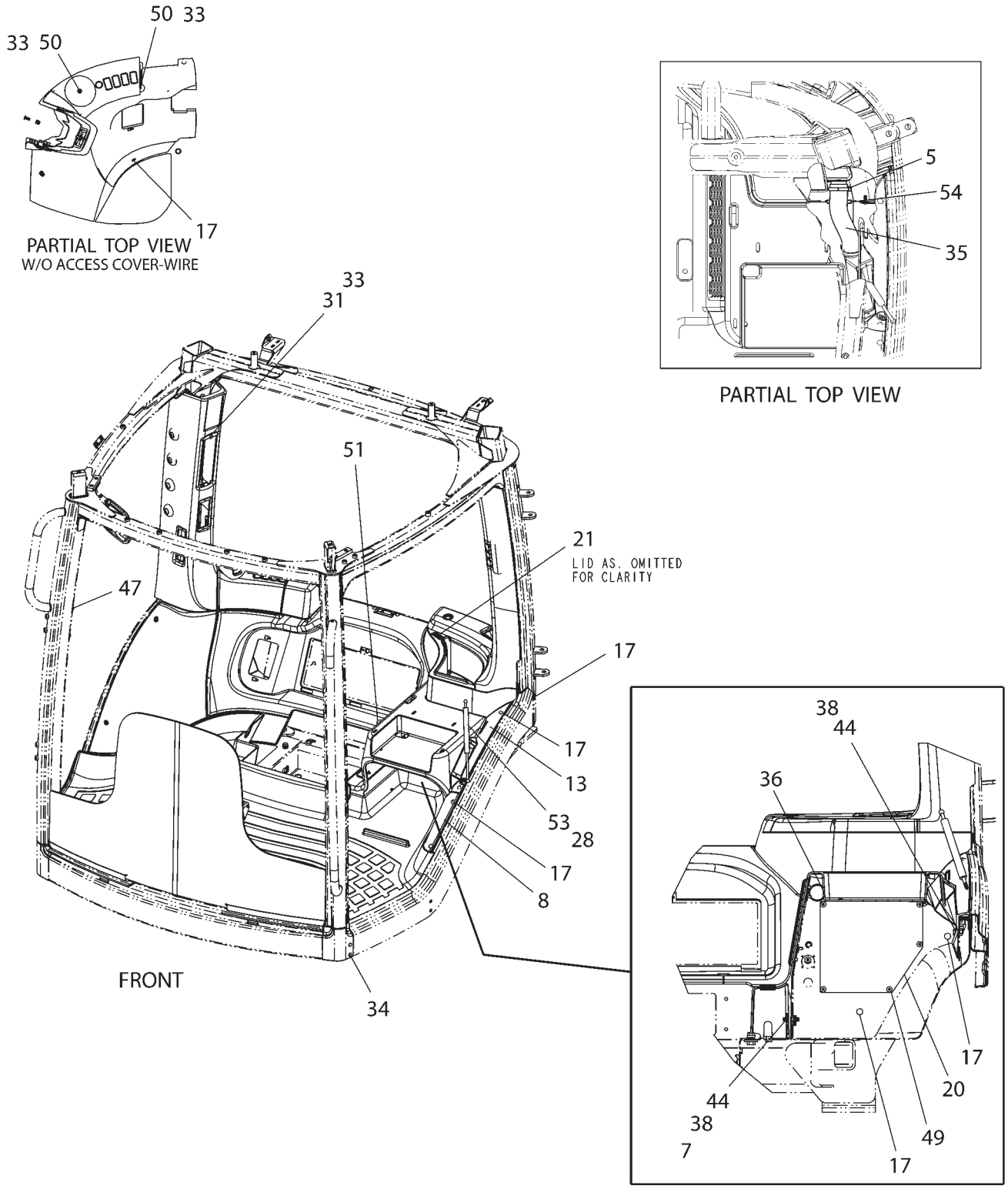

2243917B

TRIM GP-CAB - 224-3917

ITEM	NUMBER	QTY	DESCRIPTION
-	224-3917	--	TRIM GP [A]
5	CH7K-1181	2	STRAP-CABLE
7	CH154-9989	2	SPRING CLIP
8	162-6752	1	CONSOLE-LH
13	169-6345	1	SUPPORT AS
17	400110X1	16	FASTENER
20	178-6238	1	COVER-SUBWOOFER
21	CH179-2959	1	MAGNET
28	CH090-9555	2	CLIP
31	CH121-9870	1	SCREW-MACHINE (M6X1X40MM)
33	400085X1	8	NUT-RETAINER (M6X1X1.63-3.8 PANEL)
34	CH193-5914	6	PLUG
35	CH208-5521	1	HOSE (192MM)
36	400106X1	1	PLUG-RUBBER (35MM)
38	400599X1	4	WASHER-HARD (8.8X20.5X2MM THK)
44	400053X1	4	BOLT (M8X1.25X20MM)
47	CH9X-2040	6	SCREW-TRUSS HEAD (M10X1.5X25MM)
49	CH9X-2044	5	SCREW-TRUSS HEAD (M6X1X16MM)
50	CH9X-2045	5	SCREW-TRUSS HEAD (M6X1X20MM)
51	400113X1	1	GROMMET
53	501026D1	1	SPRING AS-GAS
54	CH9X-2092	AR	STRIP-EDGE (8 CM)

[A] PART OF 500841D1;500842D1;500843D1;
500844D1; 500849D1 CAB AR

2243917B
PR: t05i29k58b0542

VISOR GP-CAB (SUN VISOR) - FRONT
152-0424

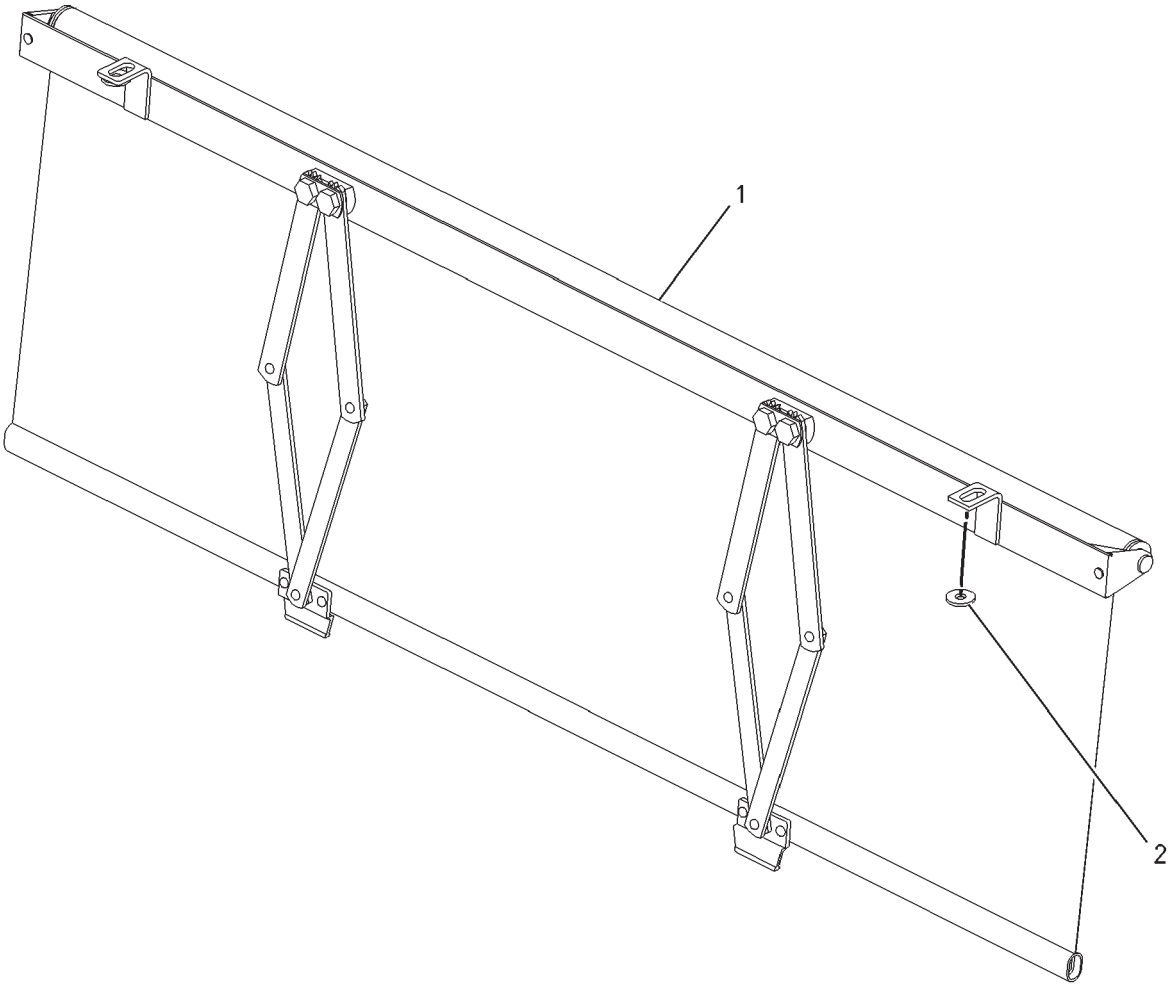

00867693

VISOR GP-CAB (SUN VISOR) - FRONT
152-0424

ITEM	NUMBER	QTY	DESCRIPTION
-	502793D1	--	VISOR GP-CAB (SUN VISOR) (FACTORY) (NOT SERVICED)
-	152-0424	--	VISOR GP-CAB (SUN VISOR) [A] (REF ONLY) (NOT SERVICED)
1	CH169-6397	1	SCREEN-SUN
2	CH9X-2038	2	WASHER (7X19X2)

[A] PART OF 152-0012; 222-4146; 500841D1;500849D1 CAB AR; 502793D1 VISOR GP-CAB

00867693
PR: t05i29k58b0543

VISOR GP-CAB (SUN VISOR) - REAR
162-4095

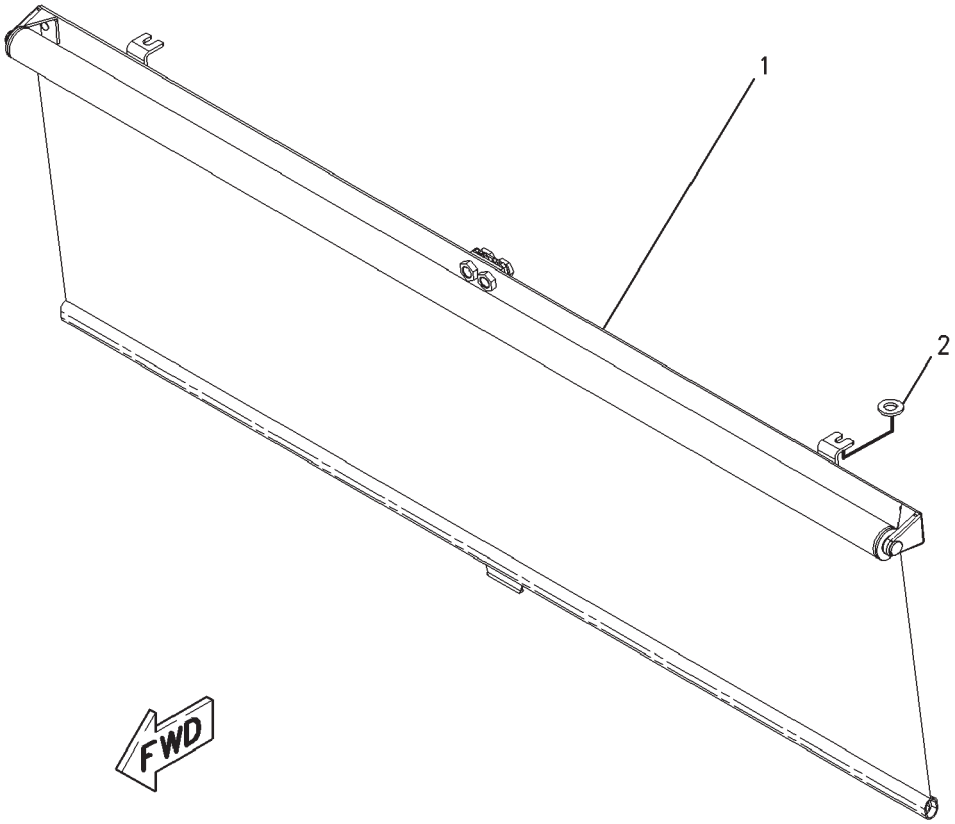

00867436

VISOR GP-CAB (SUN VISOR) - REAR
162-4095

ITEM	NUMBER	QTY	DESCRIPTION
-	162-4095	--	VISOR GP-CAB (SUN VISOR) (NOT SERVICED)
1	CH169-6397	1	SCREEN GP-SUN
2	CH9X-2038	2	WASHER (7X19X2)

00867436
PR: t05i29k58b0544

GLASS GP-WINDSHIELD - 151-9994
ROW & SPECIAL

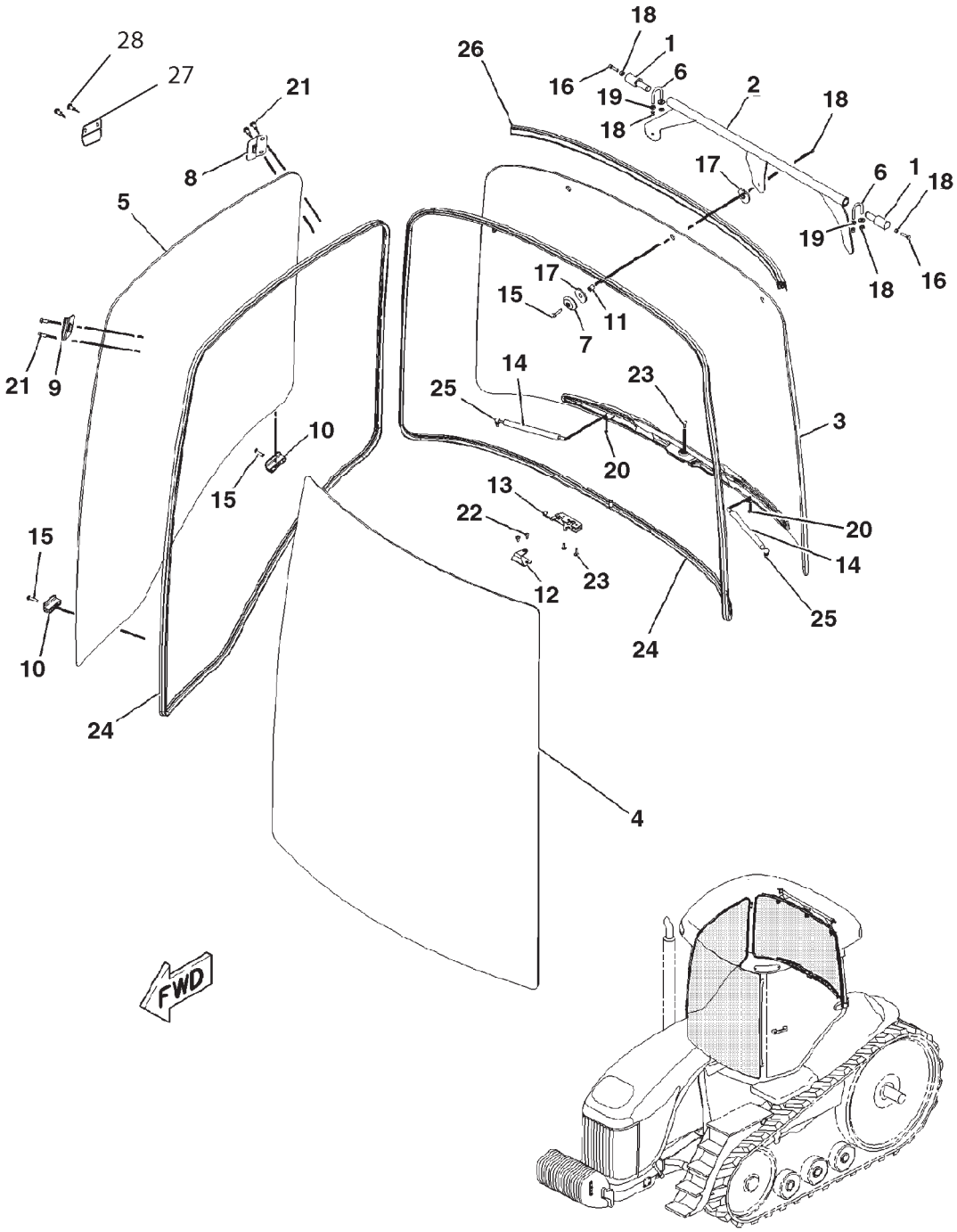

GLASS GP-WINDSHIELD - 151-9994

ROW & SPECIAL

ITEM	NUMBER	QTY	DESCRIPTION
-	151-9994	--	GLASS GP [A] (NOT SERVICED)
1	151-8541	2	PIN-HINGE
2	151-8545	1	PLATE
3	151-9979	1	WINDOW ASM-REAR
	169-6328	1	SUPPORT
	151-9982	1	GLASS-REAR
4	501896D1	1	WINDOW-FRONT
5	151-9984	1	GLASS-RH
6	CH151-9989	2	CLAMP
7	400333X1	3	WASHER (HINGE)
8	166-4568	1	CLAMP
9	166-4570	2	CLAMP
10	CH168-2309	2	CLAMP
11	CH169-6377	3	BUSHING (WINDOW HINGE)
12	169-6399	1	PLATE ASM
	400313X1	2	NUT-WELD (M6X1)
13	CH170-1445	1	LATCH
14	CH172-6862	2	SPRING ASM-GAS
15	CH142-2304	5	SCREW-BUTTON HEAD (M8X1.25X35MM)
16	CH160-8756	2	BOLT-HEX HEAD (M8X1.25X30MM)
17	400330X1	6	WASHER (REAR HINGE)
18	400340X1	9	NUT (M8X1.25)
19	400599X1	4	WASHER-HARD (8.8X20.5X2)
20	400300X1	2	NUT (M6X1)
21	CH8C-8585	6	BOLT-BUTTON HEAD (M10X1.5X20MM)
22	CH9X-2043	2	SCREW-TRUSS HEAD (M6X1X14MM)
23	CH9X-2045	3	SCREW-TRUSS HEAD (M6X1X20MM)
24	CH208-2404	AR	SEAL (1010CM)
25	CH8T-2444	4	STUD-BALL
26	207-2036	1	SEAL
27	501051D1	1	BRACKET
28	CH8T-3992	2	SCREW-BTN HD (M6X1X12MM)

[A] PART OF 152-0001;152-0003 CAB GP

0863624B
PR: t05i29k58b0545

GLASS GP-WINDSHIELD - 151-9995

EAME ONLY

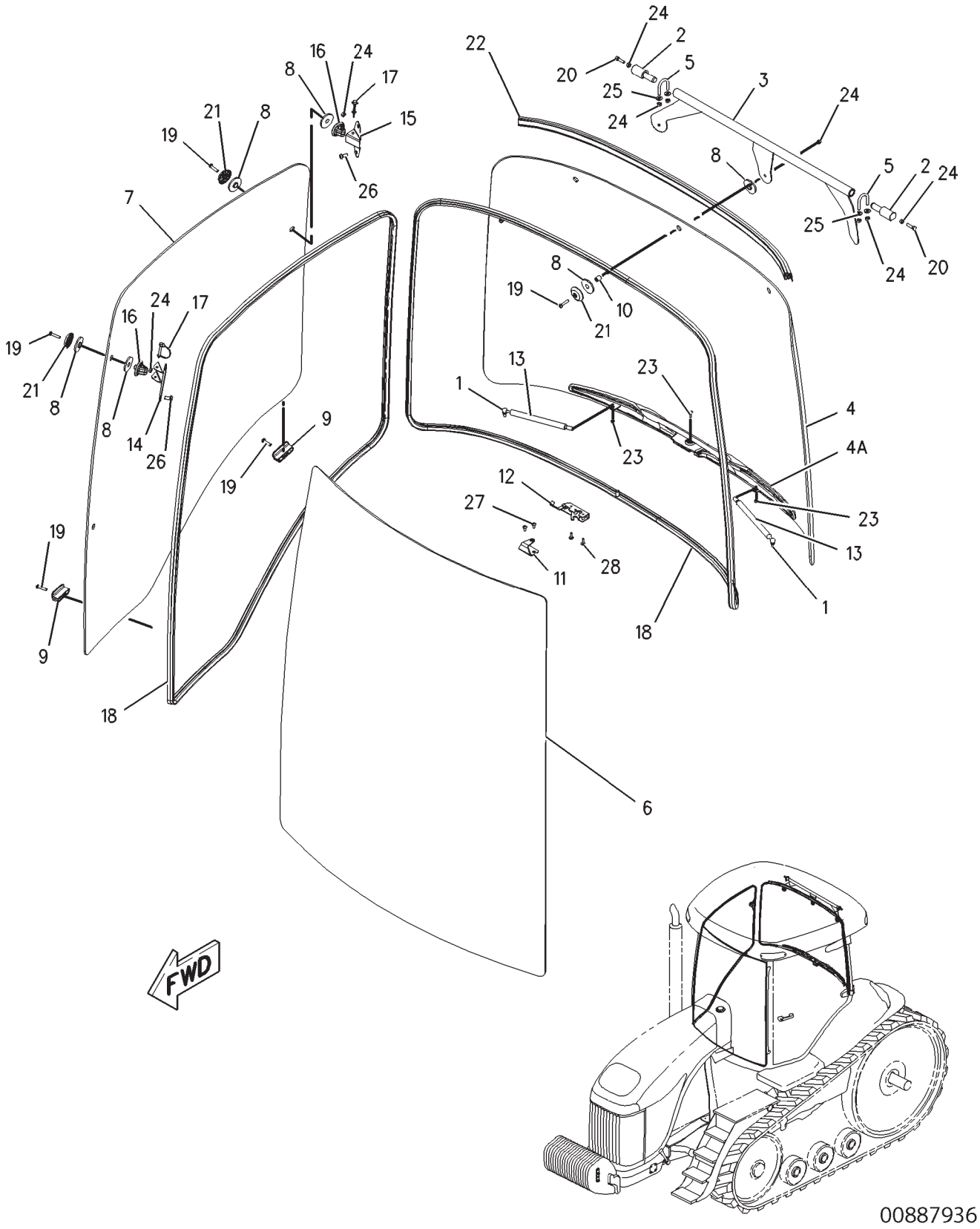

GLASS GP-WINDSHIELD - 151-9995

EAME ONLY

ITEM	NUMBER	QTY	DESCRIPTION
-	151-9995	--	GLASS GP-WINDSHIELD [A]
1	CH8T-2444	4	STUD-BALL
2	151-8541	2	PIN-HINGE
3	151-8545	1	PLATE AS-REAR HINGE
4	151-9979	1	GLASS AS-REAR
4A	169-6328	1	SUPPORT AS
5	CH151-9989	2	CLAMP
6	501896D1	1	GLASS-FRONT
7	151-9991	1	GLASS-RH
8	400333X1	6	WASHER (HINGE)
9	CH168-2309	2	CLAMP-WINDOW (LWR)
10	CH169-6377	3	BUSHING-WINDOW (HINGE)
11	169-6399	1	PLATE AS
	400313X1	2	NUT-WELD (M6X1 THD)
12	CH170-1445	1	LATCH-REAR WINDOW
13	CH172-6862	2	SPRING AS-GAS
14	178-7953	2	BRACKET
15	178-7954	1	BRACKET
16	CH178-7955	3	BOSS
17	CH179-4217	3	PIN
18	CH208-2404	AR	SEAL-BULK (1010 CM) [B, E]
19	CH142-2304	8	SCREW-BUTTON HEAD (M8X1.25X35MM)
20	CH160-8756	2	BOLT-HEX HEAD (M8X1.25X30MM)
21	400330X1	14	WASHER (REAR HINGE)
22	207-2036	1	SEAL
23	400300X1	2	NUT (M6X1 THD)
24	400340X1	12	NUT (M8X1.25 THD)
25	400599X1	4	WASHER-HARD (8.8X20.5X2MM THK)
26	CH8C-8585	6	BOLT-BUTTON HEAD (M10X1.5X20MM)
27	CH9X-2043	2	SCREW-TRUSS HEAD (M6X1X14MM)
28	CH9X-2045	3	SCREW-TRUSS HEAD (M6X1X20MM)

[E] ORDER BY THE CENTIMETER
[B] USE AS REQUIRED

[A] PART OF 152-0002;152-0004 CAB GP

00887936
PR: t05i29k58b0546

WIPER GP-WINDOW (BASIC) - 152-0422

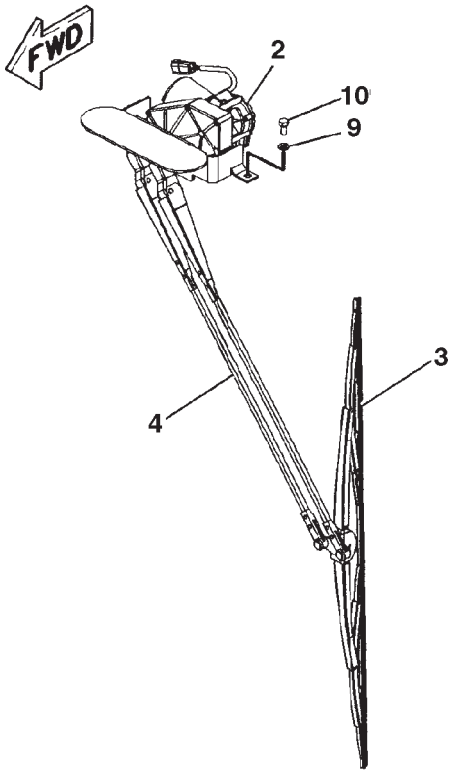

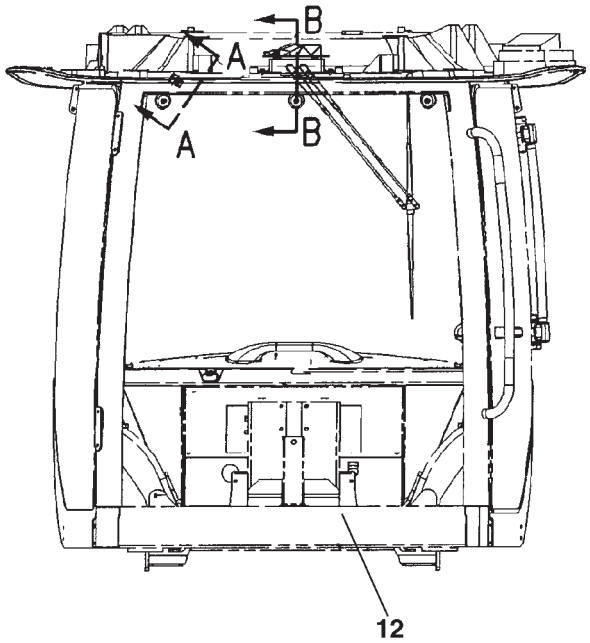

FRONT VIEW

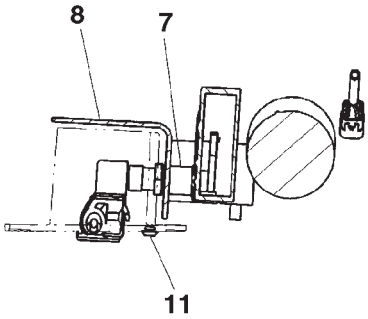

SECTION B-B

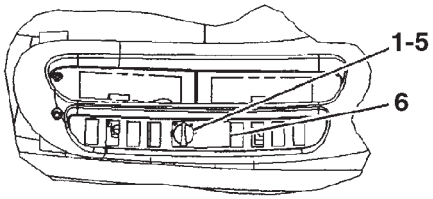

VIEW A-A

WIPER GP-WINDOW (BASIC) - 152-0422

ITEM	NUMBER	QTY	DESCRIPTION
-	152-0422		WIPER GP-WINDOW (NOT SERVICED)
1	CH216-2628	1	KNOB AS (FRONT WIPER & WASHER)
2	CH170-5696	1	MOTOR GP-WINDOW WIPER (12 VOLT)
	400340X1	2	NUT
	CH3F-9556	2	LOCKWASHER
	CH8T-8737	1	PLUG
	CH186-3735	5	PIN-CONNECTOR
	CH102-8805	1	KIT, RECEPTACLE
			(INCLUDES RECEPTACLE ASM AND WEDGE)
3	501688D1	1	BLADE-WIPER
4	CH178-3888	1	ARM ASM-WIPER
5	CH112-6174	1	SWITCH ASM-ROTARY(24 VOLT)(FRONT WIPER)
	CH2H-3920	1	LOCKWASHER
	CH6V-8369	1	NUT (7/16-28)
	CH8T-8729	6	PIN-CONNECTOR
	CH8T-8737	2	PLUG-SEAL
	CH3E-3389	1	WEDGE
	CH102-8806	1	KIT-RECEPTACLE (8 PIN)
			(INCLUDES RECEPTACLE ASM AND WEDGE)
6	501256D1	1	FILM-INSTRUCTION (WIPER)
7	CH141-1762	2	SPACER (20)
8	169-6323	1	BRACKET
9	400287X1	2	WASHER-HARD (11X21X2.5)
10	400040X1	2	BOLT (M10X1.5X20MM)
11	CH5P-7803	1	BUTTON-PLUG
12	CH193-5914	2	PLUG

WIPER GP (DELUXE) - 196-3968

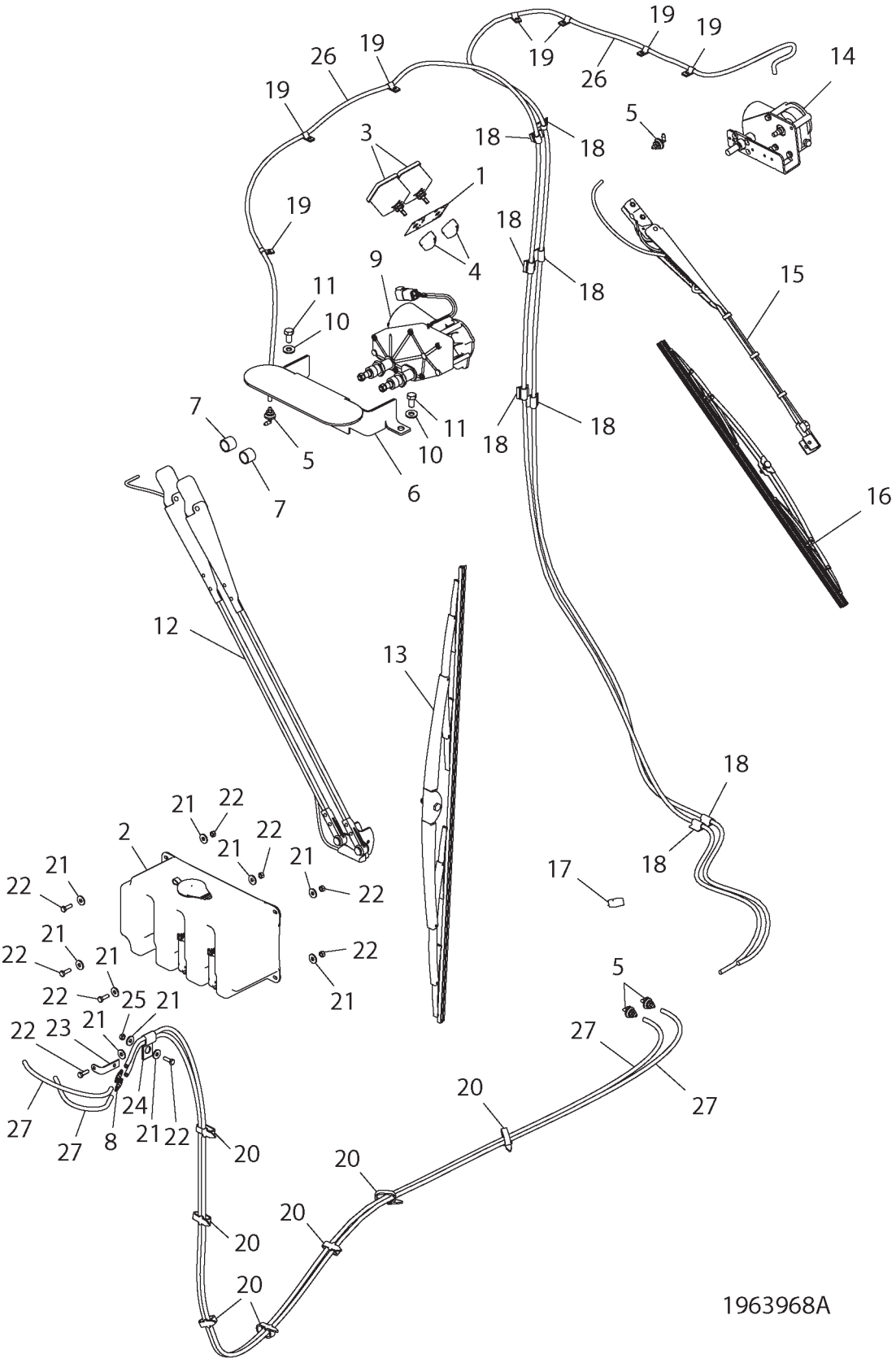

WIPER GP (DELUXE) - 196-3968

ITEM	NUMBER	QTY	DESCRIPTION
-	502905D1	--	WIPER GP (DELUXE) (NOT SERVICED)
-	196-3968	--	WIPER GP (DELUXE) [A] (NOT SERVICED)
1	501406D1	1	FILM-INST
2	CH208-9635	1	BOTTLE GP-WINDSHIELD
	CH209-4481	2	PUMP (WIPER & WASHER)
	CH209-4482	1	CAP (WINDOW WASHER TANK)
3	CH135-9967	2	SWITCH AS-WIPER INTMT 12V
			(SEE BREAKDOWN FOR COMPONENTS)
4	CH216-2628	2	KNOB AS.-CONTROL
5	CH8T-5400	4	CONNECTOR AS.-90 DEG
6	169-6323	1	BRACKET-WIPER MOUNT
7	CH141-1762	2	SPACER-25.4ODX21.2IDX20 STL
8	501120D1	2	VALVE AS.
9	CH170-5696	1	MOTOR GP-COMPACT DRIVE
	400340X1	2	NUT
	CH3F-9556	2	LOCKWASHER
	CH8T-8737	1	PLUG
	CH186-3735	5	PIN-CONNECTOR
	CH102-8805	1	KIT, RECEPTACLE
			(INCLUDES RECEPTACLE ASM AND WEDGE)
10	400287X1	2	WASHER-HARD 11IDX21ODX2.5 ZND1
11	400040X1	2	BOLT-M10X1.5X20 ZNDI HHD 10.9
12	501565D1	1	ARM AS-WIPER (WET)
	501564D1	1	NOZZLE AS-WASHER
	501566D1	1	HOSE
13	501688D1	1	BLADE AS. -WIPER
14	CH166-4596	1	MOTOR GP-COMPACT DRIVE 12V
	CH102-8805	1	KIT-RECEPTACLE (6 PIN)
	CH8T-8737	1	PLUG-SEAL
	400561X1	5	PIN-CONNECTOR
15	501604D1	1	ARM AS. -WIPER
16	CH134-1935	1	BLADE-WIPER
17	CH146-9439	1	RELAY AS.
18	400282X1	8	CLIP
19	CH9N-2061	7	CLIP-LOOP 60.3 ID
20	400837X1	7	STRAP-CABLE (PLASTIC)
21	CH5P-4115	10	WASHER-7.2IDX19ODX2MM
22	400221X1	5	BOLT-M6X1X20MM ZNDI HHD 10.9
23	228-2777	1	BRACKET
24	CH7S-4244	1	CLIP 20DEGX9.52DIAX25.4
25	400300X1	5	NUT M6X1
26	WR518622	AR	TUBING AIRLINE 0.25OD POLTHN (27FT)
27	WR514360	AR	HOSE WINDSHIELD WASHER 0.18ID (1.64FT)
27	WR514360	AR	HOSE WINDSHIELD WASHER 0.18ID (19.36FT)

[A] PART OF 502905D1 WIPER GP-DLX;
152-0012; 222-4146 CAB AR

1963968A
PR: t05i29k58b0548

KIT-WIPER (RH) - 162-4103

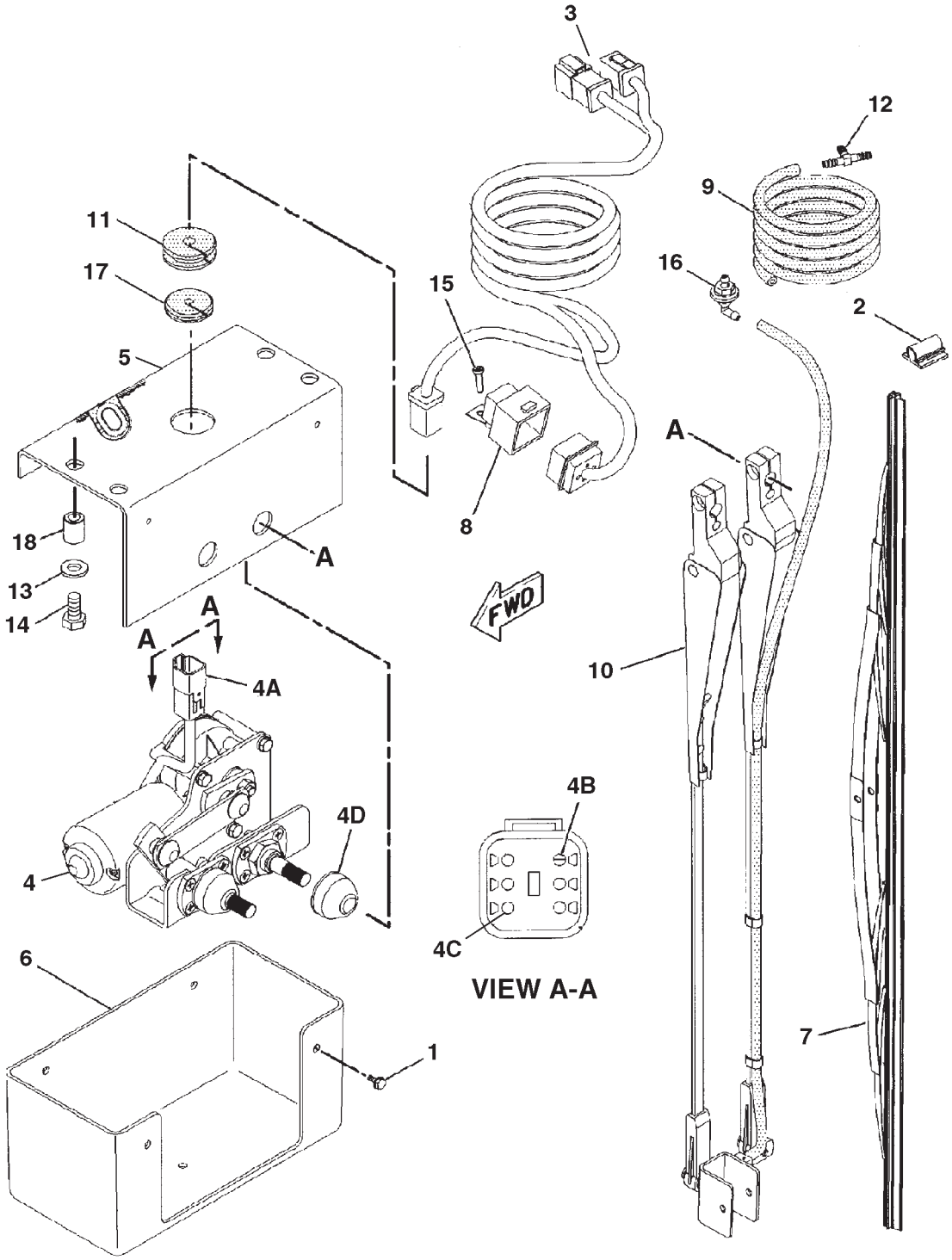

0878092A

KIT-WIPER (RH) - 162-4103

ITEM	NUMBER	QTY	DESCRIPTION
-	162-4103	--	WIPER GP-WINDOW
1	CH030-9613	4	SCREW-FORMING (10-24X0.37 IN)
2	400282X1	2	CLIP
3	167-1258	1	HARNESS (SIDE WIPER)
4	CH211-4837	1	MOTOR GP-COMPACT DRIVE (RH WIPER)
			(INCLS 4A-4D)
4A	CH102-8805	1	KIT-RECEPTACLE (6 PIN)
			(INCLS RECEPTACLE AS & WEDGE)
4B	CH8T-8737	1	PLUG-SEAL
4C	400561X1	5	PIN-CONNECTOR
4D	CH206-5823	2	CAP
5	174-7872	1	BRACKET
6	175-0198	1	COVER
7	CH189-8610	1	BLADE-WIPER (RH WINDOW)
8	400292X1	1	RELAY ASM (12 VOLT) (RH WINDOW WIPER)
9	WR514360	--	HOSE (78 CM)
10	501603D1	1	ARM
11	CH6H-4006	1	GROMMET
12	CH6K-9632	1	TEE-HOSE (50OD BARB)
13	400287X1	4	WASHER-HARD (11X21X2.5)
14	400040X1	4	BOLT (M10X1.5X20MM)
15	CH8T-9501	1	SCREW (10-16X.75 IN)
16	CH8T-5400	1	CONNECTOR
17	400114X1	1	GROMMET
18	CH179-4209	4	INSERT

FILM GP-MT835 - 500744D1

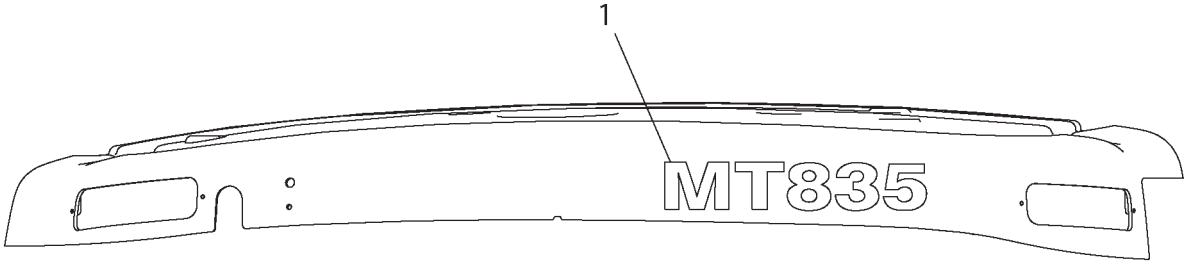

LEFT SIDE VIEW

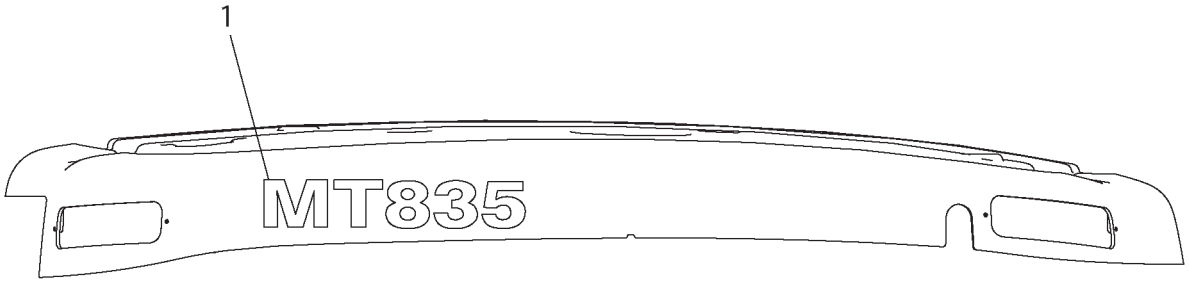

RIGHT SIDE VIEW

500744DA

FILM GP-MT835 - 500744D1

ITEM	NUMBER	QTY	DESCRIPTION
-	500744D1	--	FILM GP (MT835) [A]
1	500730D1	2	FILM (MT835)

[A] PART OF 156-5581; 179-2193
BASIC UNIT AR

500744DA
PR: t05i29k58b0550

FILM GP-MT845 - 500745D1

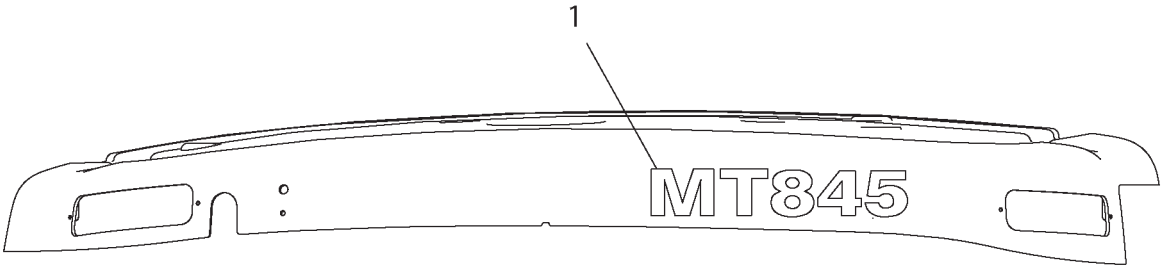

LEFT SIDE VIEW

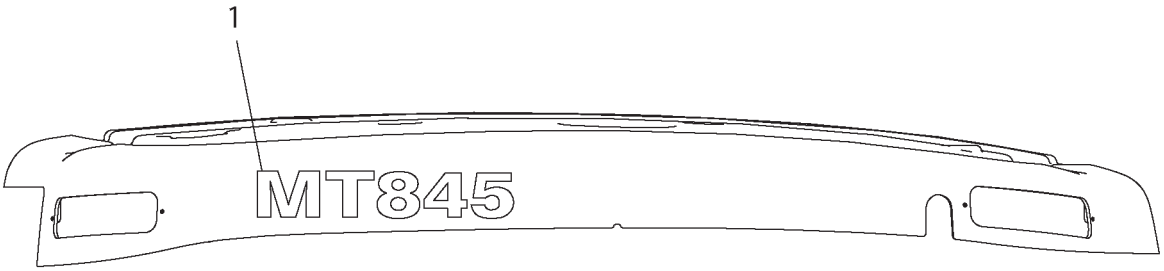

RIGHT SIDE VIEW

500745DA

FILM GP-MT845 - 500745D1

ITEM	NUMBER	QTY	DESCRIPTION
-	500745D1	--	FILM GP (MT845) [A]
1	500731D1	2	FILM (MT845)

[A] PART OF 156-5582; 179-2194
BASIC UNIT AR

500745DA
PR: t05i29k58b0551

FILM GP-MT855 - 500746D1

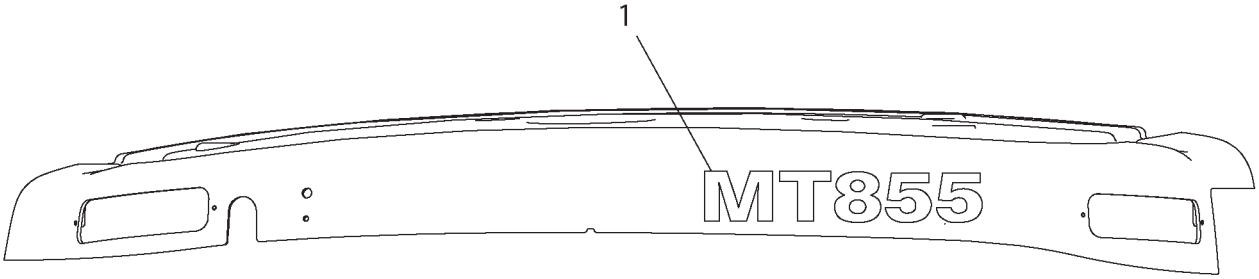

LEFT SIDE VIEW

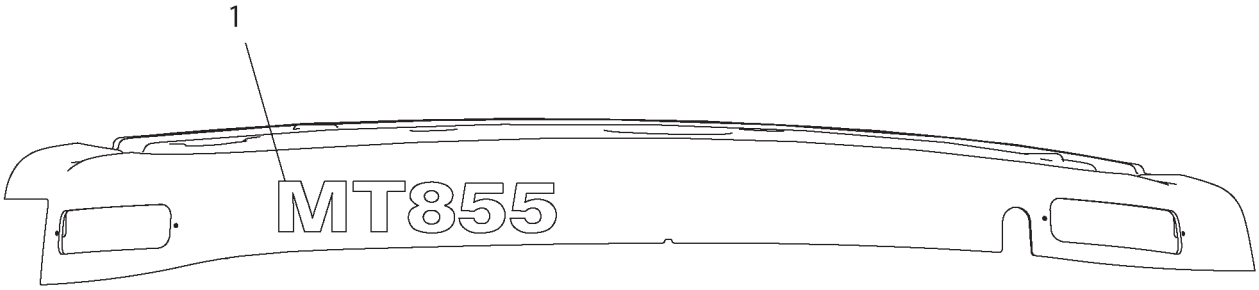

RIGHT SIDE VIEW

500746DA

FILM GP-MT855 - 500746D1

ITEM	NUMBER	QTY	DESCRIPTION
-	500746D1	--	FILM GP (MT855) [A]
1	500732D1	2	FILM (MT855)

[A] PART OF 156-5583; 179-2195
BASIC UNIT AR

500746DA
PR: t05i29k58b0552

FILM GP-MT865 - 500747D1

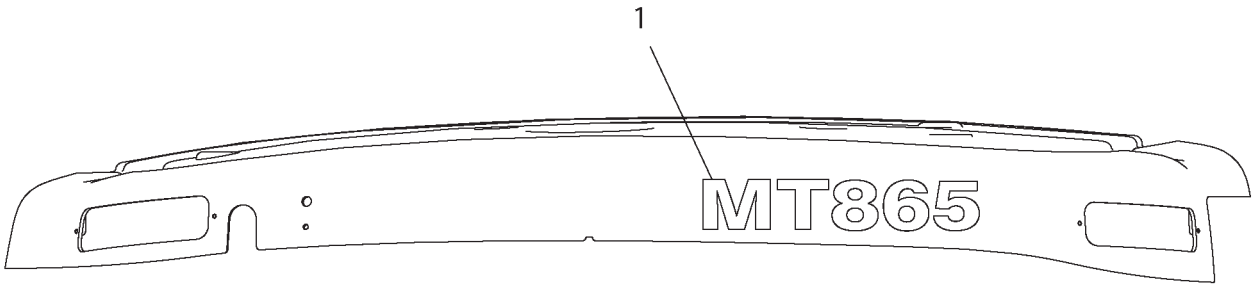

LEFT SIDE VIEW

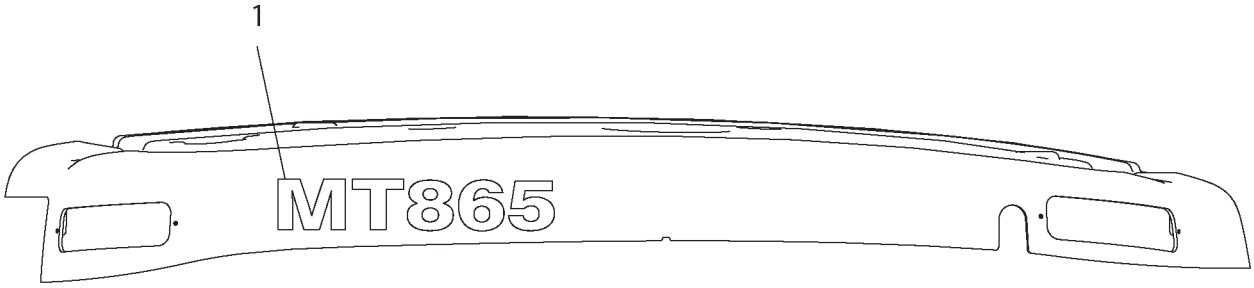

RIGHT SIDE VIEW

500747DA

FILM GP-MT865 - 500747D1

ITEM	NUMBER	QTY	DESCRIPTION
-	500747D1	--	FILM GP (MT865) [A]
1	500733D1	2	FILM (MT865)

[A] PART OF 156-5584; 179-2196
BASIC UNIT AR

500747DA
PR: t05i29k58b0553

WARNING GP-SLOW MOVING VEHICLE
172-8886

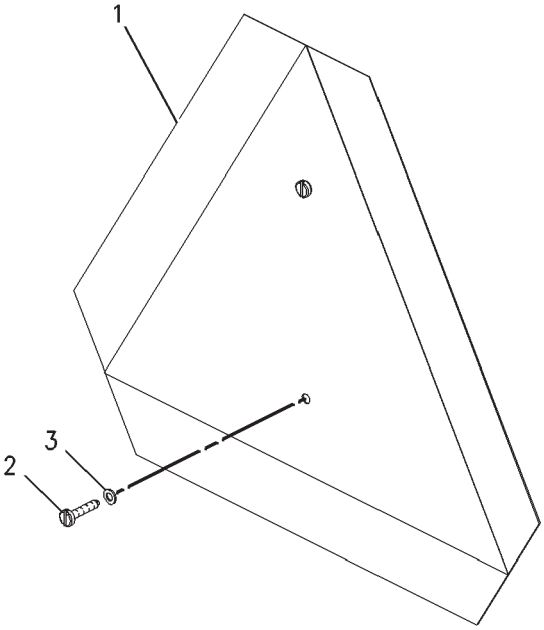

DETAILS OF AREA A

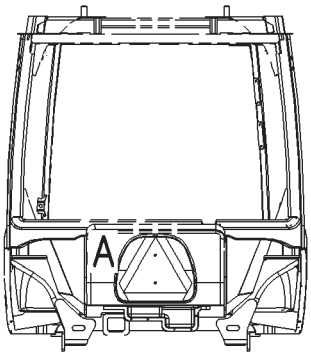

REAR VIEW

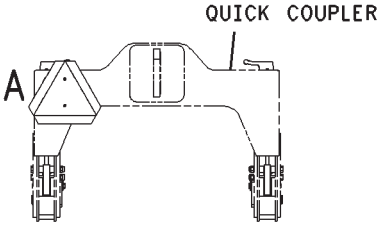

REAR VIEW
(ALTERNATE PLACEMENT)

WARNING GP-SLOW MOVING VEHICLE
172-8886

ITEM	NUMBER	QTY	DESCRIPTION
-	188-2618	--	COMPLETING AR-ENGLISH (EAME) (NOT SERVICED)
-	172-8886	--	WARNING GP-SLOW MOVING VEHICLE [A] (NOT SERVICED)
1	400129X2	1	PLATE ASM-WARNING (SLOW MOVING VEHICLE)
2	CH095-0741	2	SCREW-MACHINE (M6X1THD) (W/Q-COUPLER)
	CH216-8275	2	SCREW-PAN HD (12-14X1 IN)(W/O Q-COUPLER)
3	400310X1	2	WASHER (6.6X12X2)

[A] PART OF 188-2618 COMPLETING AR

00877873
PR: t05i29k58b0554

FILM GP-CAT - 500735D1

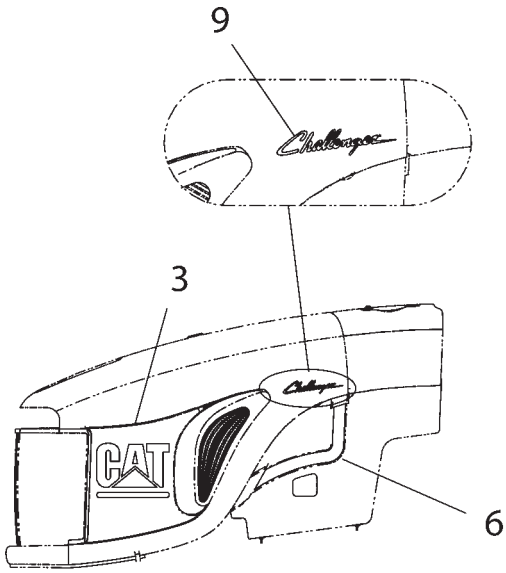

LEFT SIDE OF HOOD

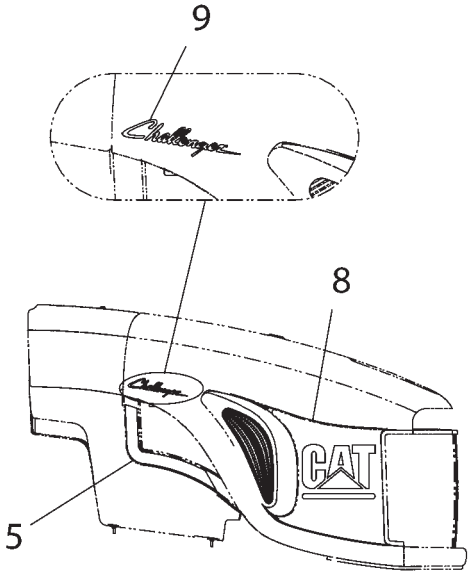

RIGHT SIDE OF HOOD

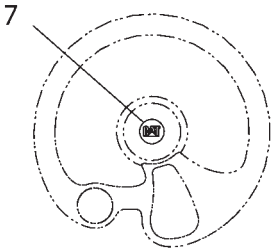

STEERING WHEEL

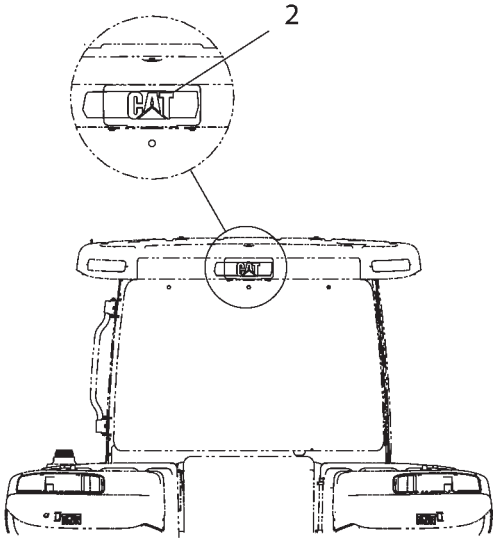

REAR VIEW OF CAB

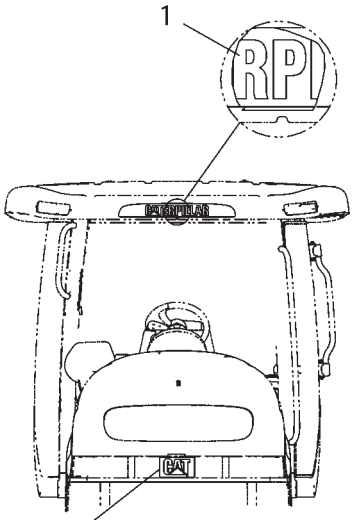

FRONT VIEW

500735DB

FILM GP-CAT - 500735D1

ITEM	NUMBER	QTY	DESCRIPTION
-	500735D1	--	FILM GP-CAT
1	501480D1	1	FILM-CATERPILLAR
2	183-9281	1	FILM-CAT
3	501482D1	1	FILM-HOOD (LEFT)
4	201-5096	1	EMBLEM AS-CAT
5	210-4357	1	FILM-SIDE PANEL
6	210-4358	1	FILM-SIDE PANEL
7	195-5221	1	FILM-CAT WHEEL LOGO
8	501483D1	1	FILM-HOOD (RIGHT)
9	500749D1	2	FILM-CHALLENGER

500735DB
PR: t05i29k58b0555

FILM GP-CHALLENGER - 500736D1

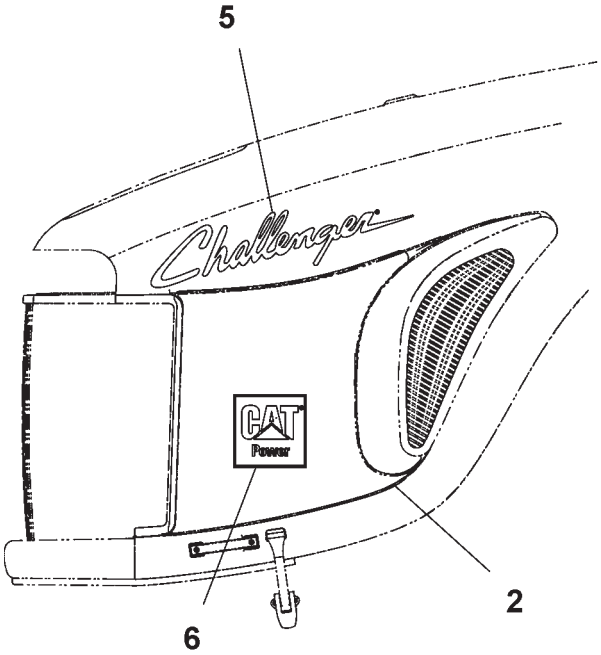

LEFT SIDE VIEW

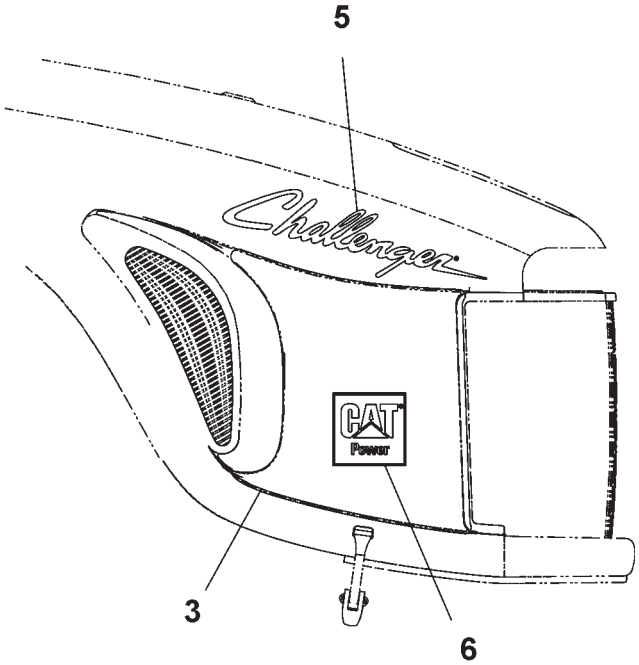

RIGHT SIDE VIEW

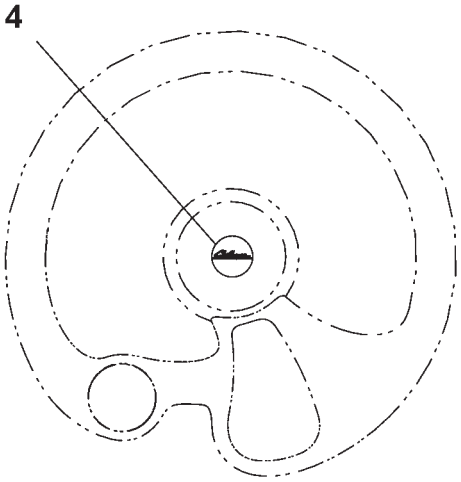

STEERING WHEEL

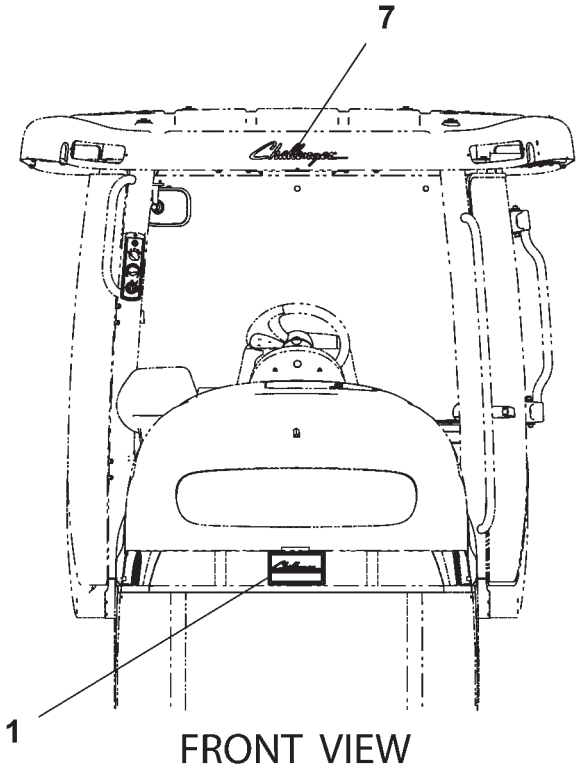

FRONT VIEW

500736DB

FILM GP-CHALLENGER - 500736D1

ITEM	NUMBER	QTY	DESCRIPTION
-	500736D1	--	FILM GP-CAT
1	500729D1	1	EMBLEM AS-CHALLENGER
2	500737D1	1	FILM-HOOD (LH)
3	500738D1	1	FILM-HOOD (RH)
4	500719D1	1	FILM-CHALLENGER
5	500734D1	2	FILM-CHALLENGER
6	500748D2	2	FILM-CAT POWER
7	500749D1	1	FILM-CHALLENGER

500736DB
PR: t05i29k58b0556

FILM GP-PAINT & - 179-2261

EAME ONLY
(PAGE 1 OF 9)

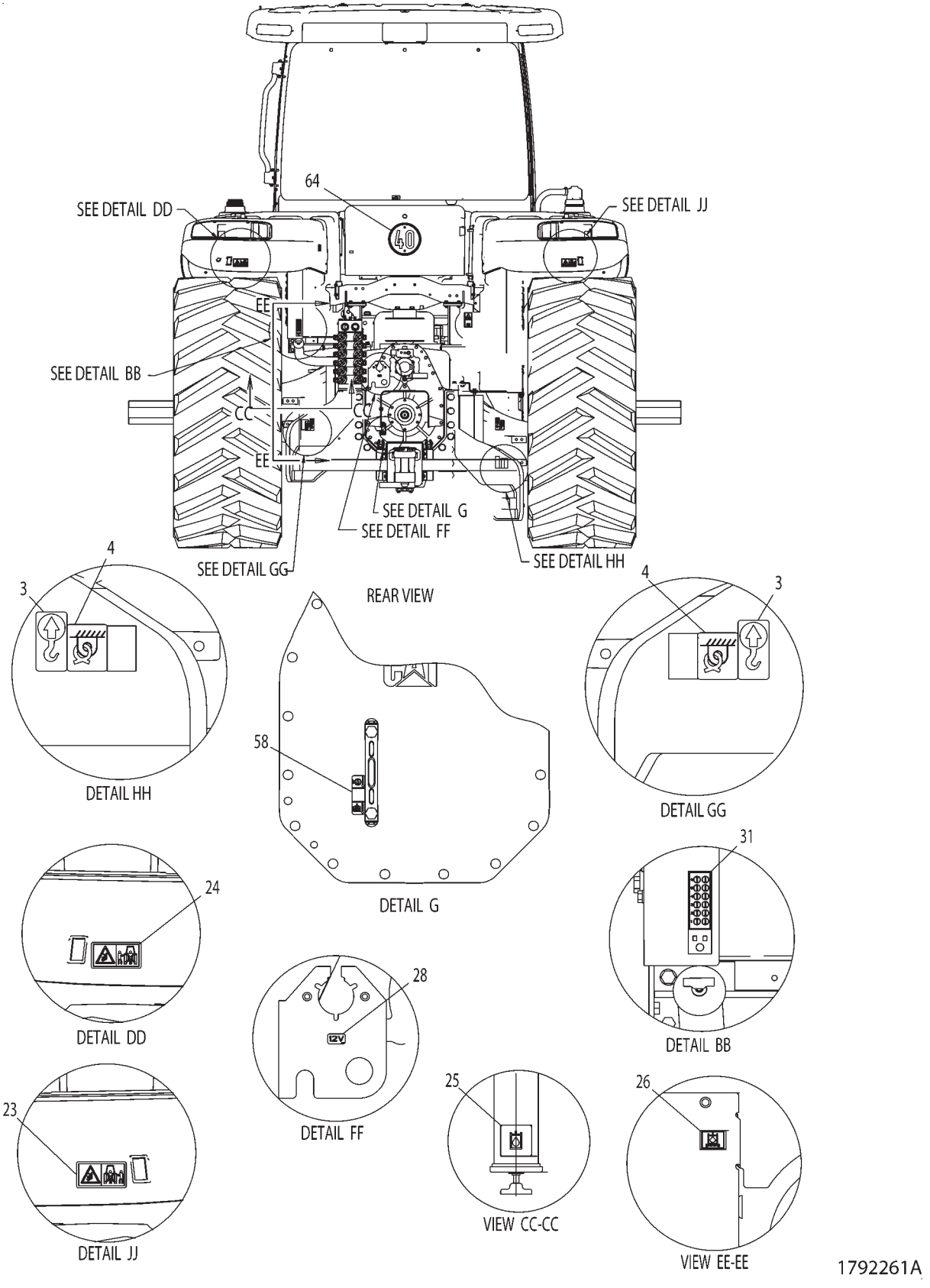

FILM GP-PAINT & - 179-2261

EAME ONLY
(PAGE 1 OF 9)

ITEM	NUMBER	QTY	DESCRIPTION
-	179-2261	--	FILM GP-PLATE & FILM
3	500371D1	4	FILM-LIFT
4	500372D1	4	FILM-TIE-DOWN
-	501501D1	1	DECAL SHEET-CAB (INCLUDES * ITEMS)
-	501259D1	1	FILM-NOTICE * **
-	501281D1	1	FILM-MIRRORS *
-	501297D1	1	FILM-WIRE ACCESS *
-	501298D1	1	FILM-WARNING *
-	501265D1	1	FILM-NOTICE *
-	501282D1	1	FILM-ROAD SPEED *
-	501302D1	1	FILM-BRAKE *
-	501274D1	2	FILM-NOTICE *
-	501273D1	1	FILM-NOTICE *
-	501406D1	1	FILM-WIPER DELUXE *
-	501272D1	2	FILM-ATERNATE EXIT *
-	501286D1	2	FILM-INSTALLATION DATE *
-	501503D1	1	DECAL SHEET-VEHICLE (SEE BREAKDOWN)
-	501505D1	1	DECAL SHEET-VEHICLE (INCLUDES ** ITEMS
-	501257D1	2	FILM-NOTICE **
-	501260D1	2	FILM-NOTICE **
-	501263D1	2	FILM-NOTICE **
-	501254D1	2	FILM-WARNING **
-	501262D1	4	FILM-NOTICE **
-	501303D1	1	FILM-COOLANT (COLD FILL) **
-	501277D1	1	FILM-BATTERY (INST) **
-	501291D1	1	FILM-BATTERY **
-	501294D1	2	FILM-WARNING (HITCH) **
-	501264D1	2	FILM-NOTICE **
-	501290D1	2	FILM-CRUSH/SEVER **
-	501292D1	1	FILM-WARNING (OVERFLOW) **
-	501259D1	1	FILM-NOTICE * **
-	501293D1	2	FILM-WARNING **
-	501306D1	1	FILM-AIR CLEANER **
-	501287D1	1	FILM-WARNING **
-	501261D1	1	FILM-NOTICE **
-	501301D1	2	FILM-TIGHTENING (BOLT) **
-	501300D1	2	FILM-TIGHTENING (BOLT) **
-	501299D1	4	FILM-TIGHTENING (BOLT) **
23	501295D1	1	FILM-HITCH (RIGHT) **
24	501296D1	1	FILM-HITCH (LEFT) **
25	501104D1	1	FILM-HYDRAULIC OIL
26	501106D1	1	FILM-IDENT (HYD OIL FILTER)
28	501253D1	3	FILM-IDENT (12V) * **
31	501267D1	1	FILM-HYD COUPLERS (INST) **
58	501307D1	1	FILM-XMSN OIL FILL
64	207-8227	1	WARNING GP-SPEED

PART OF 501811D1 BASE COMMON AR

1792261A
PR: t05i29k58b0557

FILM GP-PAINT & - 179-2261

EAME ONLY
(PAGE 2 OF 9)

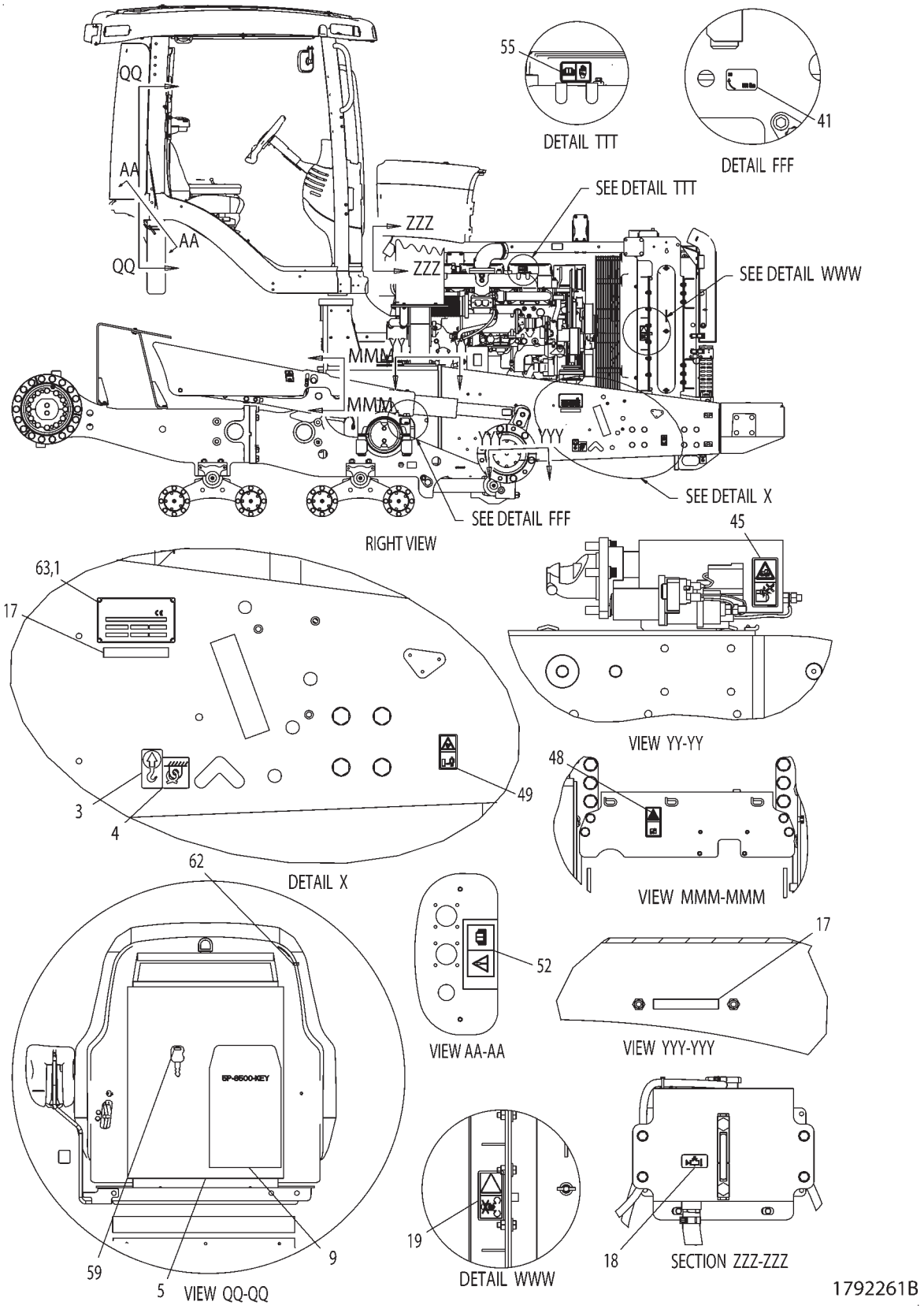

FILM GP-PAINT & - 179-2261

EAME ONLY
(PAGE 2 OF 9)

ITEM	NUMBER	QTY	DESCRIPTION
-	179-2261	--	FILM GP-PLATE & FILM
1	222-2280	1	PLATE-PIN NO.
3	500371D1	4	FILM-LIFT
4	500372D1	4	FILM-TIE-DOWN
5	CH7F-3400	1	BAG-POLYETHYLENE 305 X 380
-	501501D1	1	DECAL SHEET-CAB (INCLUDES * ITEMS)
-	501259D1	1	FILM-NOTICE * **
-	501281D1	1	FILM-MIRRORS *
-	501297D1	1	FILM-WIRE ACCESS *
-	501298D1	1	FILM-WARNING *
-	501265D1	1	FILM-NOTICE *
-	501282D1	1	FILM-ROAD SPEED *
-	501253D1	3	FILM-IDENT (12V) * **
-	501302D1	1	FILM-BRAKE *
-	501273D1	1	FILM-NOTICE *
-	501406D1	1	FILM-WIPER DELUXE *
-	501272D1	2	FILM-ATERNATE EXIT *
-	501286D1	2	FILM-INSTALLATION DATE *
-	501503D1	1	DECAL SHEET-VEHICLE (SEE BREAKDOWN)
-	501505D1	1	DECAL SHEET-VEHICLE (INCLUDES ** ITEMS
-	501257D1	2	FILM-NOTICE **
-	501260D1	2	FILM-NOTICE **
-	501254D1	2	FILM-WARNING **
-	501296D1	1	FILM-HITCH (LEFT) **
-	501253D1	3	FILM-IDENT (12V) * **
-	501277D1	1	FILM-BATTERY (INST) **
-	501291D1	1	FILM-BATTERY **
-	501295D1	1	FILM-HITCH (RIGHT) **
-	501294D1	2	FILM-WARNING (HITCH) **
-	501264D1	2	FILM-NOTICE **
-	501292D1	1	FILM-WARNING (OVERFLOW) **
-	501259D1	1	FILM-NOTICE * **
-	501306D1	1	FILM-AIR CLEANER **
-	501287D1	1	FILM-WARNING **
-	501261D1	1	FILM-NOTICE **
-	501267D1	1	FILM-HYD COUPLERS (INST) **
-	501301D1	2	FILM-TIGHTENING (BOLT) **
-	501299D1	4	FILM-TIGHTENING (BOLT) **
9	CH6V-2405	1	ENVELOPE-KEY
17	501288D1	2	FILM-CLEAR COVER
18	501303D1	1	FILM-COOLANT (COLD FILL) **
19	501290D1	2	FILM-CRUSH/SEVER **
41	501300D1	2	FILM-TIGHTENING (BOLT) **
45	501258D1	2	FILM-NOTICE
48	501262D1	4	FILM-NOTICE **
49	501263D1	2	FILM-NOTICE **
52	501274D1	2	FILM-NOTICE *
55	501293D1	2	FILM-WARNING **
59	CH5P-8500	2	KEY
62	CH5P-7958	1	SLEEVE-CABLE SPLICE 2.38 OD
63	CH168-8389	4	TACK-FASTENER (METAL)

PART OF 501811D1 BASE COMMON AR

FILM GP-PAINT & - 179-2261

EAME ONLY
(PAGE 3 OF 9)

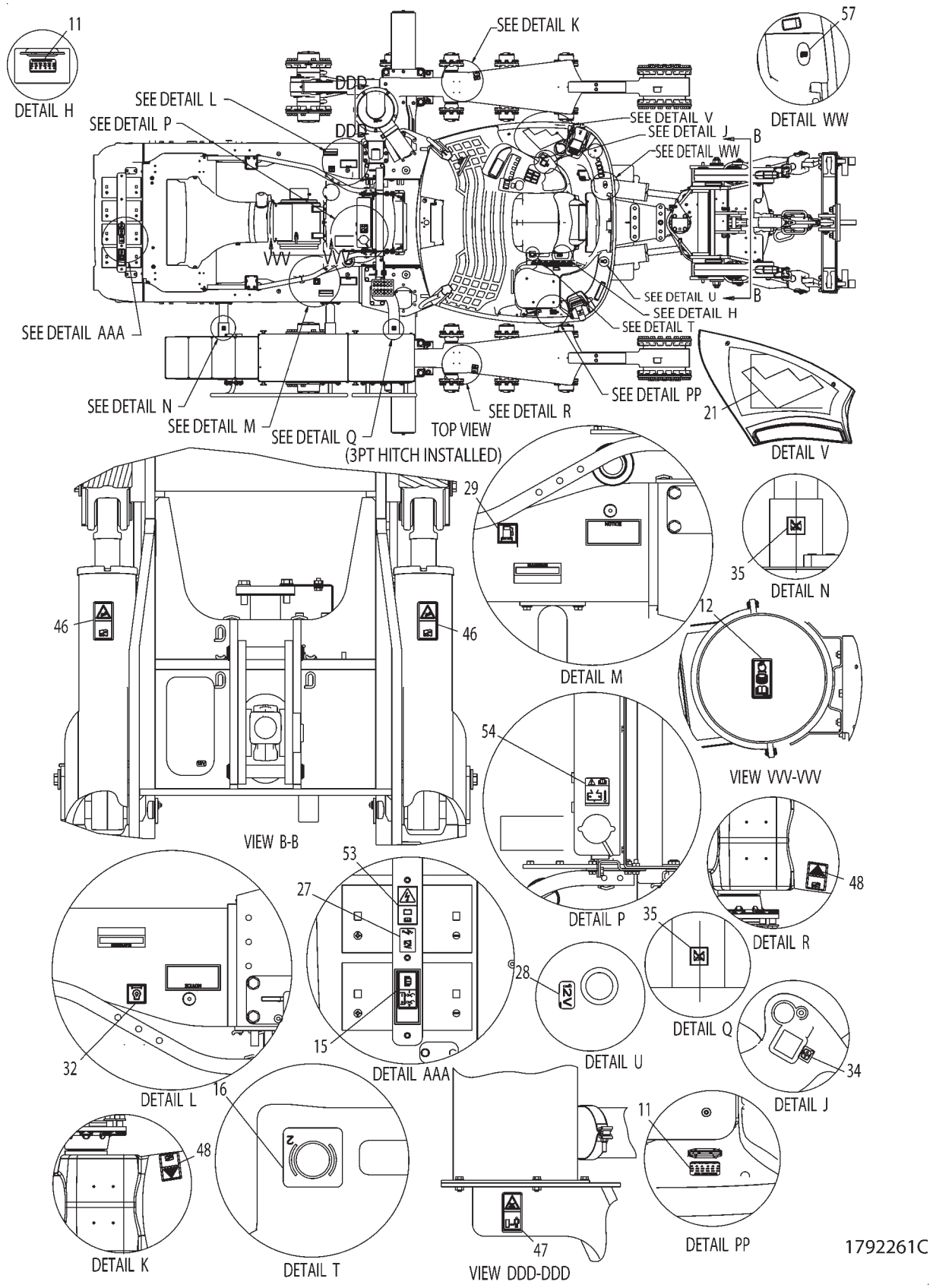

FILM GP-PAINT & - 179-2261

EAME ONLY
(PAGE 3 OF 9)

ITEM	NUMBER	QTY	DESCRIPTION
-	179-2261	--	FILM GP-PLATE & FILM
-	501501D1	1	DECAL SHEET-CAB (INCLUDES * ITEMS)
-	501259D1	1	FILM-NOTICE * **
-	501298D1	1	FILM-WARNING *
-	501265D1	1	FILM-NOTICE *
-	501282D1	1	FILM-ROAD SPEED *
-	501253D1	3	FILM-IDENT (12V) * **
-	501274D1	2	FILM-NOTICE *
-	501273D1	1	FILM-NOTICE *
-	501406D1	1	FILM-WIPER DELUXE *
-	501272D1	2	FILM-ATERNATE EXIT *
-	501503D1	1	DECAL SHEET-VEHICLE (SEE BREAKDOWN)
-	501505D1	1	DECAL SHEET-VEHICLE (INCLUDES ** ITEMS
-	501257D1	2	FILM-NOTICE **
-	501263D1	2	FILM-NOTICE **
-	501254D1	2	FILM-WARNING **
-	501296D1	1	FILM-HITCH (LEFT) **
-	501262D1	4	FILM-NOTICE **
-	501303D1	1	FILM-COOLANT (COLD FILL) **
-	501277D1	1	FILM-BATTERY (INST) **
-	501295D1	1	FILM-HITCH (RIGHT) **
-	501294D1	2	FILM-WARNING (HITCH) **
-	501264D1	2	FILM-NOTICE **
-	501290D1	2	FILM-CRUSH/SEVER **
-	501259D1	1	FILM-NOTICE * **
-	501293D1	2	FILM-WARNING **
-	501267D1	1	FILM-HYD COUPLERS (INST) **
-	501301D1	2	FILM-TIGHTENING (BOLT) **
-	501300D1	2	FILM-TIGHTENING (BOLT) **
-	501299D1	4	FILM-TIGHTENING (BOLT) **
11	501286D1	2	FILM-INSTALLATION DATE *
12	501306D1	1	FILM-AIR CLEANER **
15	501291D1	1	FILM-BATTERY **
16	501302D1	1	FILM-BRAKE *
21	501271D1	1	FILM-FUSE PANEL
27	501252D1	1	FILM-IDENT (12V)
28	501253D1	3	FILM-IDENT (12V) * **
29	501103D1	1	FILM-INST (FUEL FILTER)
32	501276D1	1	FILM-ENGINE OIL FILTER(INST)
34	501281D1	1	FILM-MIRRORS *
35	501251D1	2	FILM-NO STEP
46	501260D1	2	FILM-NOTICE **
47	501261D1	1	FILM-NOTICE **
48	501262D1	4	FILM-NOTICE **
53	501287D1	1	FILM-WARNING **
54	501292D1	1	FILM-WARNING (OVERFLOW) **
57	501297D1	1	FILM-WIRE ACCESS *

PART OF 501811D1 BASE COMMON AR

1792261C
PR: t05i29k58b0559

FILM GP-PAINT & - 179-2261

EAME ONLY
(PAGE 4 OF 9)

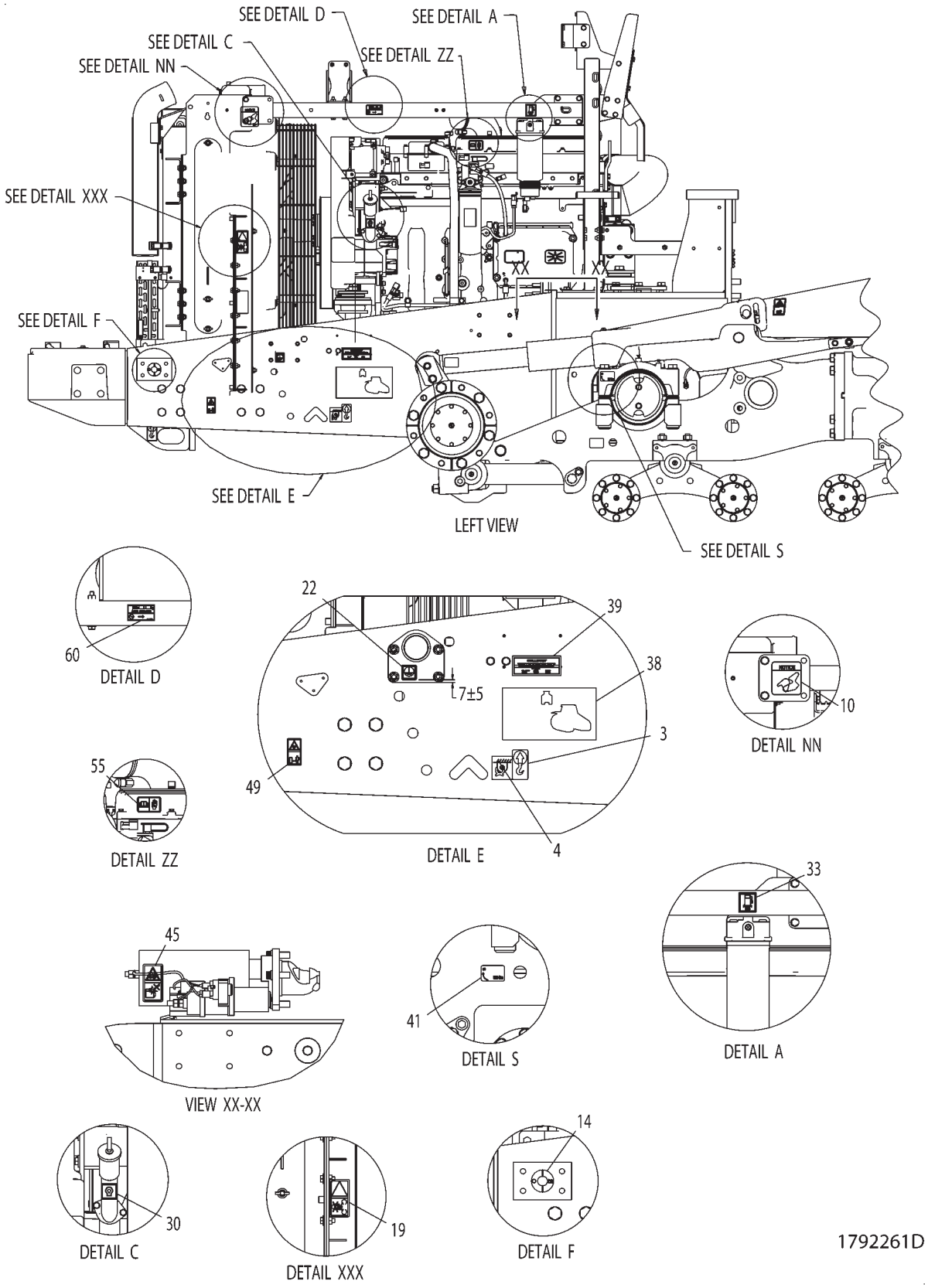

FILM GP-PAINT & - 179-2261

EAME ONLY
(PAGE 4 OF 9)

ITEM	NUMBER	QTY	DESCRIPTION
-	179-2261	--	FILM GP-PLATE & FILM
3	500371D1	4	FILM-LIFT
4	500372D1	4	FILM-TIE-DOWN
-	501501D1	1	DECAL SHEET-CAB (INCLUDES * ITEMS)
-	501259D1	1	FILM-NOTICE * **
-	501281D1	1	FILM-MIRRORS *
-	501297D1	1	FILM-WIRE ACCESS *
-	501298D1	1	FILM-WARNING *
-	501265D1	1	FILM-NOTICE *
-	501282D1	1	FILM-ROAD SPEED *
-	501253D1	3	FILM-IDENT (12V) * **
-	501302D1	1	FILM-BRAKE *
-	501274D1	2	FILM-NOTICE *
-	501273D1	1	FILM-NOTICE *
-	501406D1	1	FILM-WIPER DELUXE *
-	501272D1	2	FILM-ATERNATE EXIT *
-	501286D1	2	FILM-INSTALLATION DATE *
-	501503D1	1	DECAL SHEET-VEHICLE (SEE BREAKDOWN)
-	501505D1	1	DECAL SHEET-VEHICLE (INCLUDES ** ITEMS
-	501257D1	2	FILM-NOTICE **
-	501260D1	2	FILM-NOTICE **
-	501263D1	2	FILM-NOTICE **
-	501254D1	2	FILM-WARNING **
-	501296D1	1	FILM-HITCH (LEFT) **
-	501262D1	4	FILM-NOTICE **
-	501303D1	1	FILM-COOLANT (COLD FILL) **
-	501253D1	3	FILM-IDENT (12V) * **
-	501291D1	1	FILM-BATTERY **
-	501295D1	1	FILM-HITCH (RIGHT) **
-	501294D1	2	FILM-WARNING (HITCH) **
-	501264D1	2	FILM-NOTICE **
-	501292D1	1	FILM-WARNING (OVERFLOW) **
-	501259D1	1	FILM-NOTICE * **
-	501293D1	2	FILM-WARNING **
-	501306D1	1	FILM-AIR CLEANER **
-	501287D1	1	FILM-WARNING **
-	501261D1	1	FILM-NOTICE **
-	501267D1	1	FILM-HYD COUPLERS (INST) **
-	501301D1	2	FILM-TIGHTENING (BOLT) **
-	501299D1	4	FILM-TIGHTENING (BOLT) **
10	501278D1	1	FILM-BELT (ROUTING)
14	501277D1	1	FILM-BATTERY (INST) **
19	501290D1	2	FILM-CRUSH/SEVER **
22	501105D1	1	FILM-GROUND GEN
30	501108D1	1	FILM-INSTRUCTION
33	501280D1	1	FILM-WATER SEPARATOR
38	501269D1	1	FILM-NOTICE (SHIPPING)
39	501305D1	1	FILM-PATENT
41	501300D1	2	FILM-TIGHTENING (BOLT) **
45	501258D1	2	FILM-NOTICE
49	501263D1	2	FILM-NOTICE **
55	501293D1	2	FILM-WARNING **
60	502279D1	1	PLATE-INST (A/C)

PART OF 501811D1 BASE COMMON AR

1792261D
PR: t05i29k58b0560

FILM GP-PAINT & - 179-2261

EAME ONLY
(PAGE 5 OF 9)

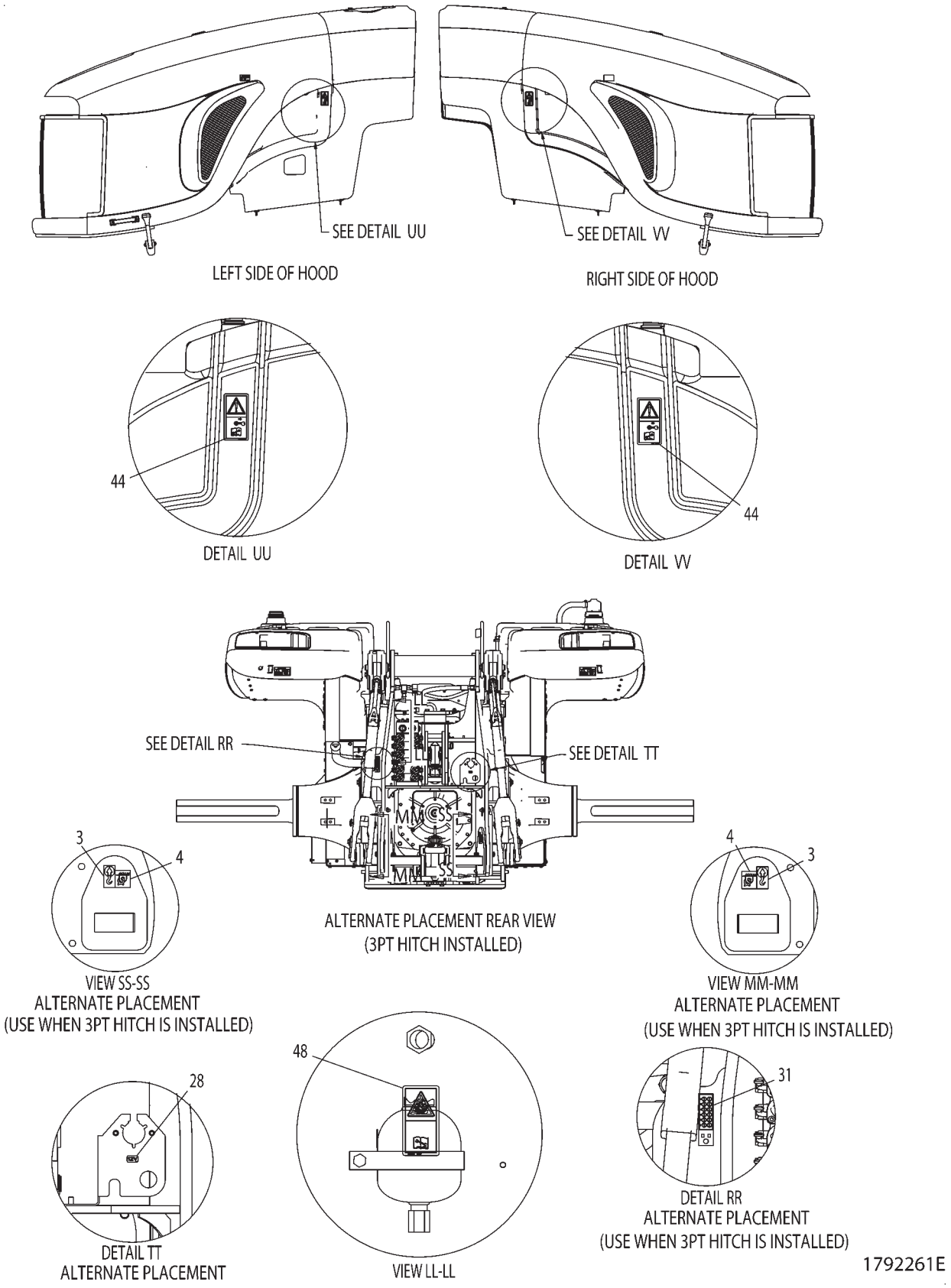

FILM GP-PAINT & - 179-2261

EAME ONLY
(PAGE 5 OF 9)

ITEM	NUMBER	QTY	DESCRIPTION
-	179-2261	--	FILM GP-PLATE & FILM
3	500371D1	4	FILM-LIFT
4	500372D1	4	FILM-TIE-DOWN
-	501501D1	1	DECAL SHEET-CAB (INCLUDES * ITEMS)
-	501259D1	1	FILM-NOTICE * **
-	501281D1	1	FILM-MIRRORS *
-	501297D1	1	FILM-WIRE ACCESS *
-	501298D1	1	FILM-WARNING *
-	501265D1	1	FILM-NOTICE *
-	501282D1	1	FILM-ROAD SPEED *
-	501253D1	3	FILM-IDENT (12V) * **
-	501302D1	1	FILM-BRAKE *
-	501274D1	2	FILM-NOTICE *
-	501273D1	1	FILM-NOTICE *
-	501406D1	1	FILM-WIPER DELUXE *
-	501272D1	2	FILM-ATERNATE EXIT *
-	501286D1	2	FILM-INSTALLATION DATE *
-	501503D1	1	DECAL SHEET-VEHICLE (SEE BREAKDOWN)
-	501505D1	1	DECAL SHEET-VEHICLE (INCLUDES ** ITEMS
-	501260D1	2	FILM-NOTICE **
-	501263D1	2	FILM-NOTICE **
-	501254D1	2	FILM-WARNING **
-	501296D1	1	FILM-HITCH (LEFT) **
-	501303D1	1	FILM-COOLANT (COLD FILL) **
-	501277D1	1	FILM-BATTERY (INST) **
-	501291D1	1	FILM-BATTERY **
-	501295D1	1	FILM-HITCH (RIGHT) **
-	501294D1	2	FILM-WARNING (HITCH) **
-	501264D1	2	FILM-NOTICE **
-	501290D1	2	FILM-CRUSH/SEVER **
-	501292D1	1	FILM-WARNING (OVERFLOW) **
-	501259D1	1	FILM-NOTICE * **
-	501293D1	2	FILM-WARNING **
-	501306D1	1	FILM-AIR CLEANER **
-	501287D1	1	FILM-WARNING **
-	501261D1	1	FILM-NOTICE **
-	501301D1	2	FILM-TIGHTENING (BOLT) **
-	501300D1	2	FILM-TIGHTENING (BOLT) **
-	501299D1	4	FILM-TIGHTENING (BOLT) **
28	501253D1	3	FILM-IDENT (12V) * **
31	501267D1	1	FILM-HYD COUPLERS (INST) **
44	501257D1	2	FILM-NOTICE **
48	501262D1	4	FILM-NOTICE **

PART OF 501811D1 BASE COMMON AR

1792261E
PR: t05i29k58b0561

FILM GP-PAINT & - 179-2261

EAME ONLY
(PAGE 6 OF 9)

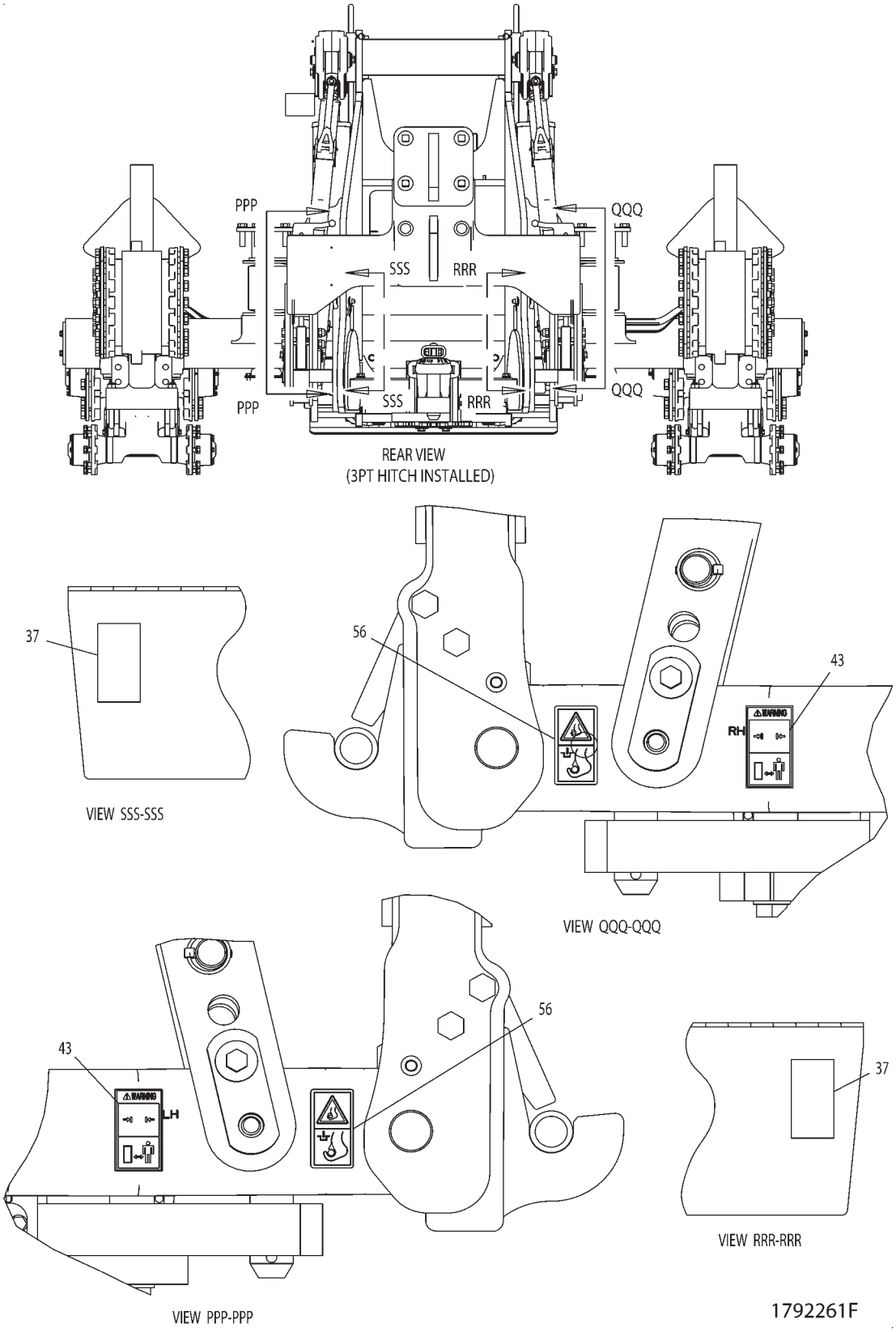

FILM GP-PAINT & - 179-2261

EAME ONLY
(PAGE 6 OF 9)

ITEM	NUMBER	QTY	DESCRIPTION
-	179-2261	--	FILM GP-PLATE & FILM
-	501501D1	1	DECAL SHEET-CAB (INCLUDES * ITEMS)
-	501259D1	1	FILM-NOTICE * **
-	501281D1	1	FILM-MIRRORS *
-	501297D1	1	FILM-WIRE ACCESS *
-	501298D1	1	FILM-WARNING *
-	501265D1	1	FILM-NOTICE *
-	501282D1	1	FILM-ROAD SPEED *
-	501253D1	3	FILM-IDENT (12V) * **
-	501302D1	1	FILM-BRAKE *
-	501274D1	2	FILM-NOTICE *
-	501273D1	1	FILM-NOTICE *
-	501406D1	1	FILM-WIPER DELUXE *
-	501272D1	2	FILM-ATERNATE EXIT *
-	501286D1	2	FILM-INSTALLATION DATE *
-	501503D1	1	DECAL SHEET-VEHICLE (SEE BREAKDOWN)
-	501505D1	1	DECAL SHEET-VEHICLE (INCLUDES ** ITEMS
-	501257D1	2	FILM-NOTICE **
-	501260D1	2	FILM-NOTICE **
-	501263D1	2	FILM-NOTICE **
-	501296D1	1	FILM-HITCH (LEFT) **
-	501262D1	4	FILM-NOTICE **
-	501303D1	1	FILM-COOLANT (COLD FILL) **
-	501253D1	3	FILM-IDENT (12V) * **
-	501277D1	1	FILM-BATTERY (INST) **
-	501291D1	1	FILM-BATTERY **
-	501295D1	1	FILM-HITCH (RIGHT) **
-	501290D1	2	FILM-CRUSH/SEVER **
-	501292D1	1	FILM-WARNING (OVERFLOW) **
-	501259D1	1	FILM-NOTICE * **
-	501293D1	2	FILM-WARNING **
-	501306D1	1	FILM-AIR CLEANER **
-	501287D1	1	FILM-WARNING **
-	501261D1	1	FILM-NOTICE **
-	501267D1	1	FILM-HYD COUPLERS (INST) **
-	501301D1	2	FILM-TIGHTENING (BOLT) **
-	501300D1	2	FILM-TIGHTENING (BOLT) **
-	501299D1	4	FILM-TIGHTENING (BOLT) **
37	501264D1	2	FILM-NOTICE **
43	501254D1	2	FILM-WARNING **
56	501294D1	2	FILM-WARNING (HITCH) **

PART OF 501811D1 BASE COMMON AR

1792261F
PR: t05i29k58b0562

FILM GP-PAINT & - 179-2261
EAME ONLY
(PAGE 7 OF 9)

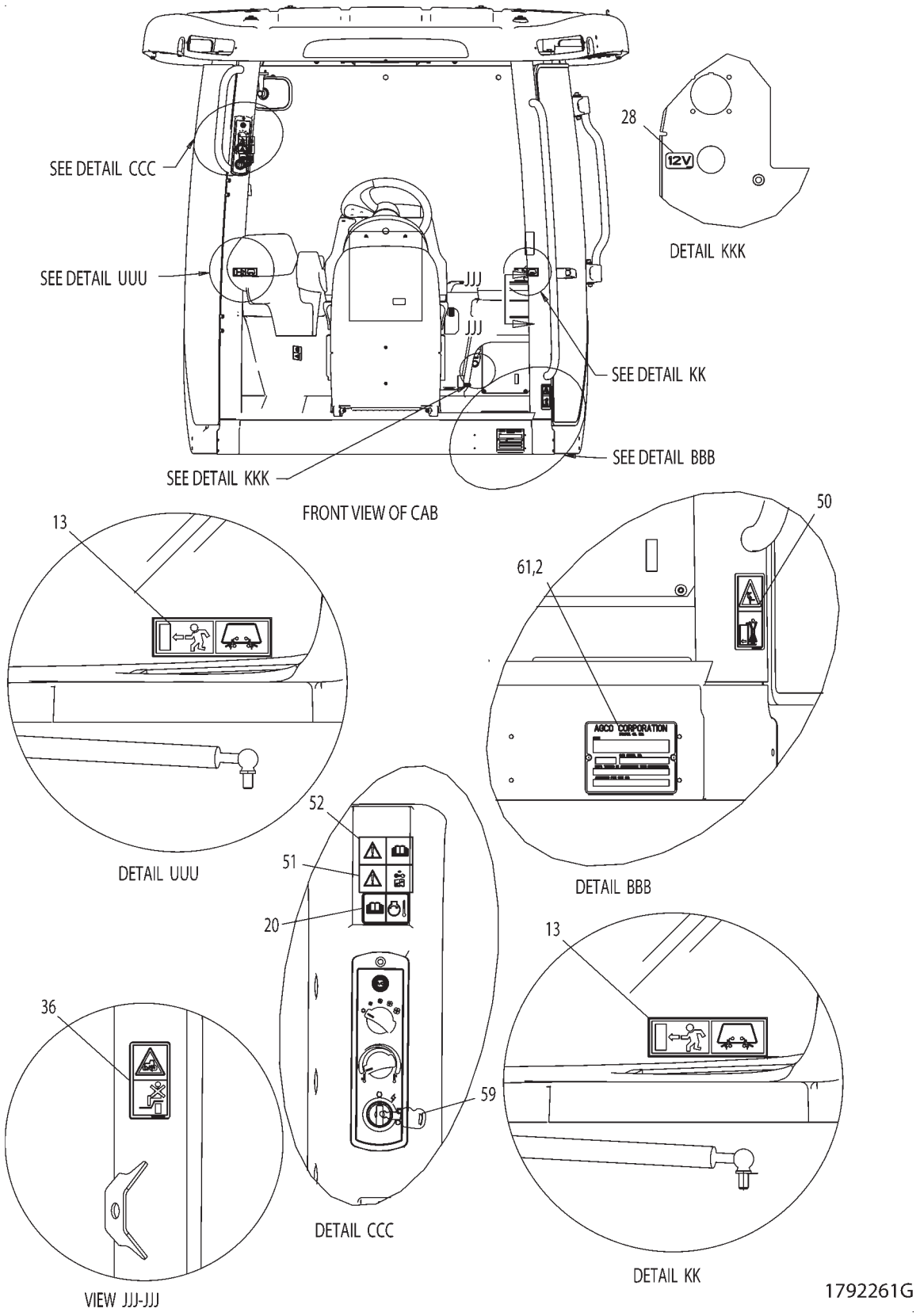

FILM GP-PAINT & - 179-2261

EAME ONLY
(PAGE 7 OF 9)

ITEM	NUMBER	QTY	DESCRIPTION
-	179-2261	--	FILM GP-PLATE & FILM
2	502620D1	1	PLATE-ROPS (NOT SERVICED)
-	501501D1	1	DECAL SHEET-CAB (INCLUDES * ITEMS)
-	501281D1	1	FILM-MIRRORS *
-	501297D1	1	FILM-WIRE ACCESS *
-	501282D1	1	FILM-ROAD SPEED *
-	501302D1	1	FILM-BRAKE *
-	501406D1	1	FILM-WIPER DELUXE *
-	501286D1	2	FILM-INSTALLATION DATE *
-	501503D1	1	DECAL SHEET-VEHICLE (SEE BREAKDOWN)
-	501505D1	1	DECAL SHEET-VEHICLE (INCLUDES ** ITEMS
-	501257D1	2	FILM-NOTICE **
-	501260D1	2	FILM-NOTICE **
-	501263D1	2	FILM-NOTICE **
-	501254D1	2	FILM-WARNING **
-	501296D1	1	FILM-HITCH (LEFT) **
-	501262D1	4	FILM-NOTICE **
-	501303D1	1	FILM-COOLANT (COLD FILL) **
-	501277D1	1	FILM-BATTERY (INST) **
-	501291D1	1	FILM-BATTERY **
-	501295D1	1	FILM-HITCH (RIGHT) **
-	501294D1	2	FILM-WARNING (HITCH) **
-	501264D1	2	FILM-NOTICE **
-	501290D1	2	FILM-CRUSH/SEVER **
-	501292D1	1	FILM-WARNING (OVERFLOW) **
-	501293D1	2	FILM-WARNING **
-	501306D1	1	FILM-AIR CLEANER **
-	501287D1	1	FILM-WARNING **
-	501261D1	1	FILM-NOTICE **
-	501267D1	1	FILM-HYD COUPLERS (INST) **
-	501301D1	2	FILM-TIGHTENING (BOLT) **
-	501300D1	2	FILM-TIGHTENING (BOLT) **
-	501299D1	4	FILM-TIGHTENING (BOLT) **
13	501272D1	2	FILM-ATERNATE EXIT *
20	501298D1	1	FILM-WARNING *
28	501253D1	3	FILM-IDENT (12V) * **
36	501259D1	1	FILM-NOTICE * **
50	501265D1	1	FILM-NOTICE *
51	501273D1	1	FILM-NOTICE *
52	501274D1	2	FILM-NOTICE *
59	CH5P-8500	2	KEY
61	CH8C-3348	2	RIVET-BLIND 1.6-3.18GRIPX3.18

PART OF 501811D1 BASE COMMON AR

1792261G
PR: t05i29k58b0563

FILM GP-PAINT & - 179-2261
EAME ONLY
(PAGE 8 OF 9)

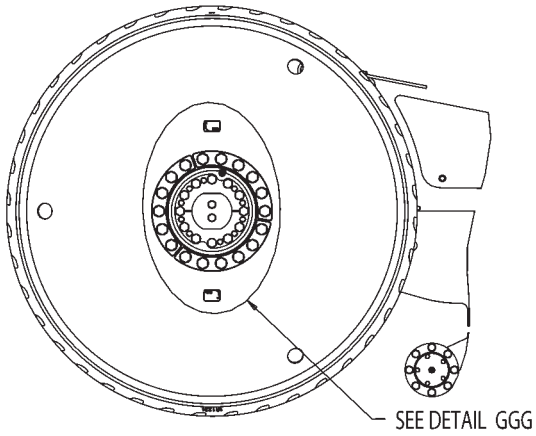

RIGHT SIDE OF UNDERCARRIAGE

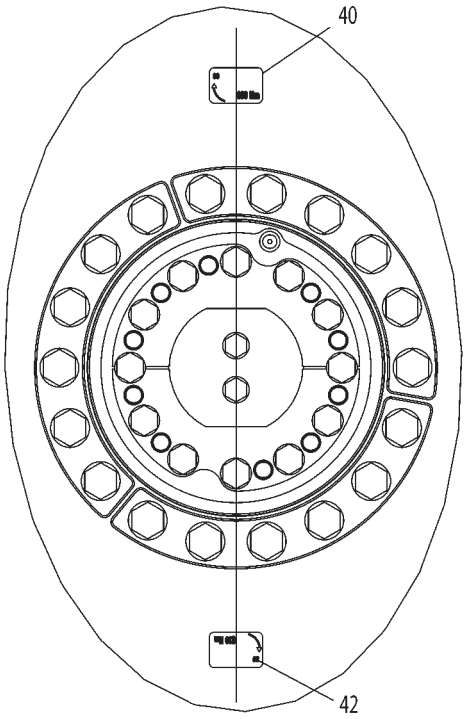

DETAIL GGG

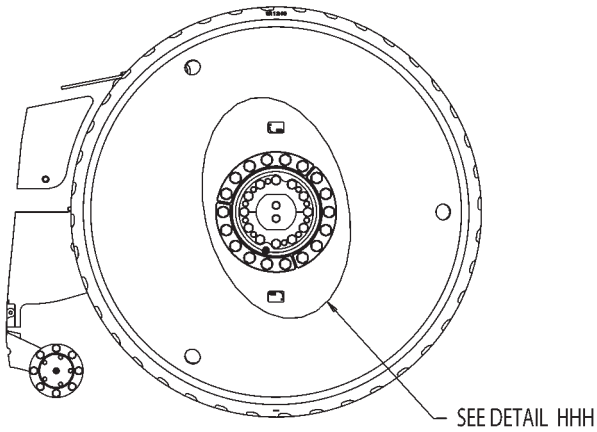

LEFT SIDE OF UNDERCARRIAGE

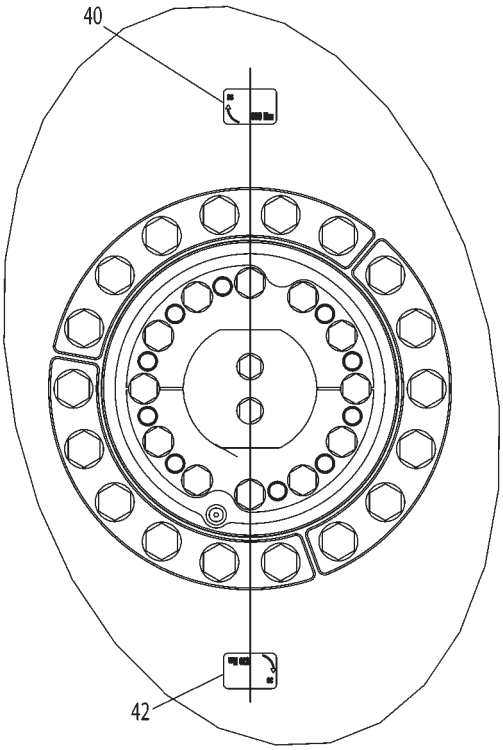

DETAIL HHH

1792261H

FILM GP-PAINT & - 179-2261

EAME ONLY
(PAGE 8 OF 9)

ITEM	NUMBER	QTY	DESCRIPTION
-	179-2261	--	FILM GP-PLATE & FILM
-	501501D1	1	DECAL SHEET-CAB (INCLUDES * ITEMS)
-	501259D1	1	FILM-NOTICE * **
-	501281D1	1	FILM-MIRRORS *
-	501297D1	1	FILM-WIRE ACCESS *
-	501298D1	1	FILM-WARNING *
-	501265D1	1	FILM-NOTICE *
-	501282D1	1	FILM-ROAD SPEED *
-	501253D1	3	FILM-IDENT (12V) * **
-	501302D1	1	FILM-BRAKE *
-	501274D1	2	FILM-NOTICE *
-	501273D1	1	FILM-NOTICE *
-	501406D1	1	FILM-WIPER DELUXE *
-	501272D1	2	FILM-ATERNATE EXIT *
-	501286D1	2	FILM-INSTALLATION DATE *
-	501503D1	1	DECAL SHEET-VEHICLE (SEE BREAKDOWN)
-	501505D1	1	DECAL SHEET-VEHICLE (INCLUDES ** ITEMS
-	501257D1	2	FILM-NOTICE **
-	501260D1	2	FILM-NOTICE **
-	501263D1	2	FILM-NOTICE **
-	501254D1	2	FILM-WARNING **
-	501296D1	1	FILM-HITCH (LEFT) **
-	501262D1	4	FILM-NOTICE **
-	501303D1	1	FILM-COOLANT (COLD FILL) **
-	501253D1	3	FILM-IDENT (12V) * **
-	501277D1	1	FILM-BATTERY (INST) **
-	501291D1	1	FILM-BATTERY **
-	501295D1	1	FILM-HITCH (RIGHT) **
-	501294D1	2	FILM-WARNING (HITCH) **
-	501264D1	2	FILM-NOTICE **
-	501290D1	2	FILM-CRUSH/SEVER **
-	501292D1	1	FILM-WARNING (OVERFLOW) **
-	501259D1	1	FILM-NOTICE * **
-	501293D1	2	FILM-WARNING **
-	501306D1	1	FILM-AIR CLEANER **
-	501287D1	1	FILM-WARNING **
-	501261D1	1	FILM-NOTICE **
-	501267D1	1	FILM-HYD COUPLERS (INST) **
-	501300D1	2	FILM-TIGHTENING (BOLT) **
40	501299D1	4	FILM-TIGHTENING (BOLT) **
42	501301D1	2	FILM-TIGHTENING (BOLT) **

PART OF 501811D1 BASE COMMON AR

1792261H
PR: t05i29k58b0564

FILM GP-PAINT & - 179-2261

EAME ONLY
(PAGE 9 OF 9)

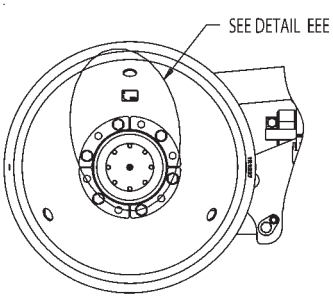

LEFT SIDE OF UNDERCARRIAGE

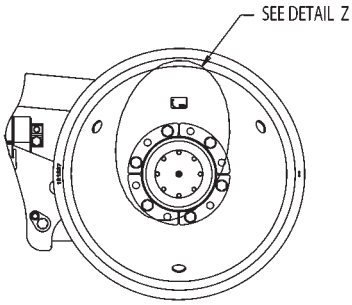

RIGHT SIDE OF UNDERCARRIAGE

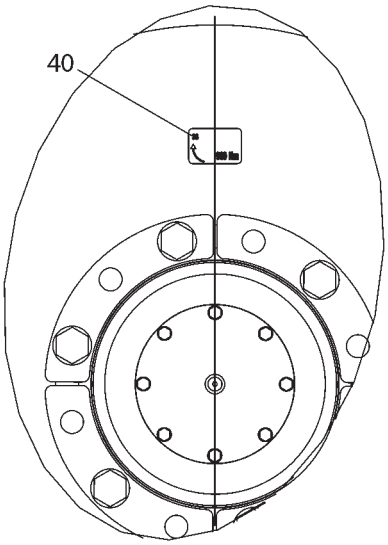

DETAIL Z

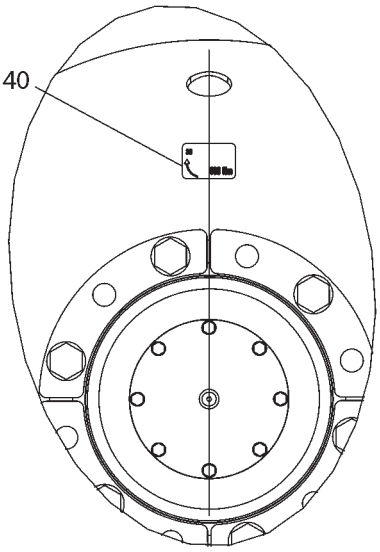

DETAIL EEE

1792261J

FILM GP-PAINT & - 179-2261

EAME ONLY
(PAGE 9 OF 9)

ITEM	NUMBER	QTY	DESCRIPTION
-	179-2261	--	FILM GP-PLATE & FILM
-	501501D1	1	DECAL SHEET-CAB (INCLUDES * ITEMS)
-	501259D1	1	FILM-NOTICE * **
-	501281D1	1	FILM-MIRRORS *
-	501297D1	1	FILM-WIRE ACCESS *
-	501298D1	1	FILM-WARNING *
-	501265D1	1	FILM-NOTICE *
-	501282D1	1	FILM-ROAD SPEED *
-	501253D1	3	FILM-IDENT (12V) * **
-	501302D1	1	FILM-BRAKE *
-	501274D1	2	FILM-NOTICE *
-	501273D1	1	FILM-NOTICE *
-	501406D1	1	FILM-WIPER DELUXE *
-	501272D1	2	FILM-ATERNATE EXIT *
-	501286D1	2	FILM-INSTALLATION DATE *
-	501503D1	1	DECAL SHEET-VEHICLE (SEE BREAKDOWN)
-	501505D1	1	DECAL SHEET-VEHICLE (INCLUDES ** ITEMS
-	501257D1	2	FILM-NOTICE **
-	501260D1	2	FILM-NOTICE **
-	501263D1	2	FILM-NOTICE **
-	501254D1	2	FILM-WARNING **
-	501296D1	1	FILM-HITCH (LEFT) **
-	501262D1	4	FILM-NOTICE **
-	501303D1	1	FILM-COOLANT (COLD FILL) **
-	501253D1	3	FILM-IDENT (12V) * **
-	501277D1	1	FILM-BATTERY (INST) **
-	501291D1	1	FILM-BATTERY **
-	501295D1	1	FILM-HITCH (RIGHT) **
-	501294D1	2	FILM-WARNING (HITCH) **
-	501264D1	2	FILM-NOTICE **
-	501290D1	2	FILM-CRUSH/SEVER **
-	501292D1	1	FILM-WARNING (OVERFLOW) **
-	501259D1	1	FILM-NOTICE * **
-	501293D1	2	FILM-WARNING **
-	501306D1	1	FILM-AIR CLEANER **
-	501287D1	1	FILM-WARNING **
-	501261D1	1	FILM-NOTICE **
-	501267D1	1	FILM-HYD COUPLERS (INST) **
-	501301D1	2	FILM-TIGHTENING (BOLT) **
-	501300D1	2	FILM-TIGHTENING (BOLT) **
40	501299D1	4	FILM-TIGHTENING (BOLT) **

PART OF 501811D1 BASE COMMON AR

1792261J
PR: t05i29k58b0565

FILM GP - & PLATES - 179-2185

ROW & SPECIAL
(PAGE 1 OF 5)

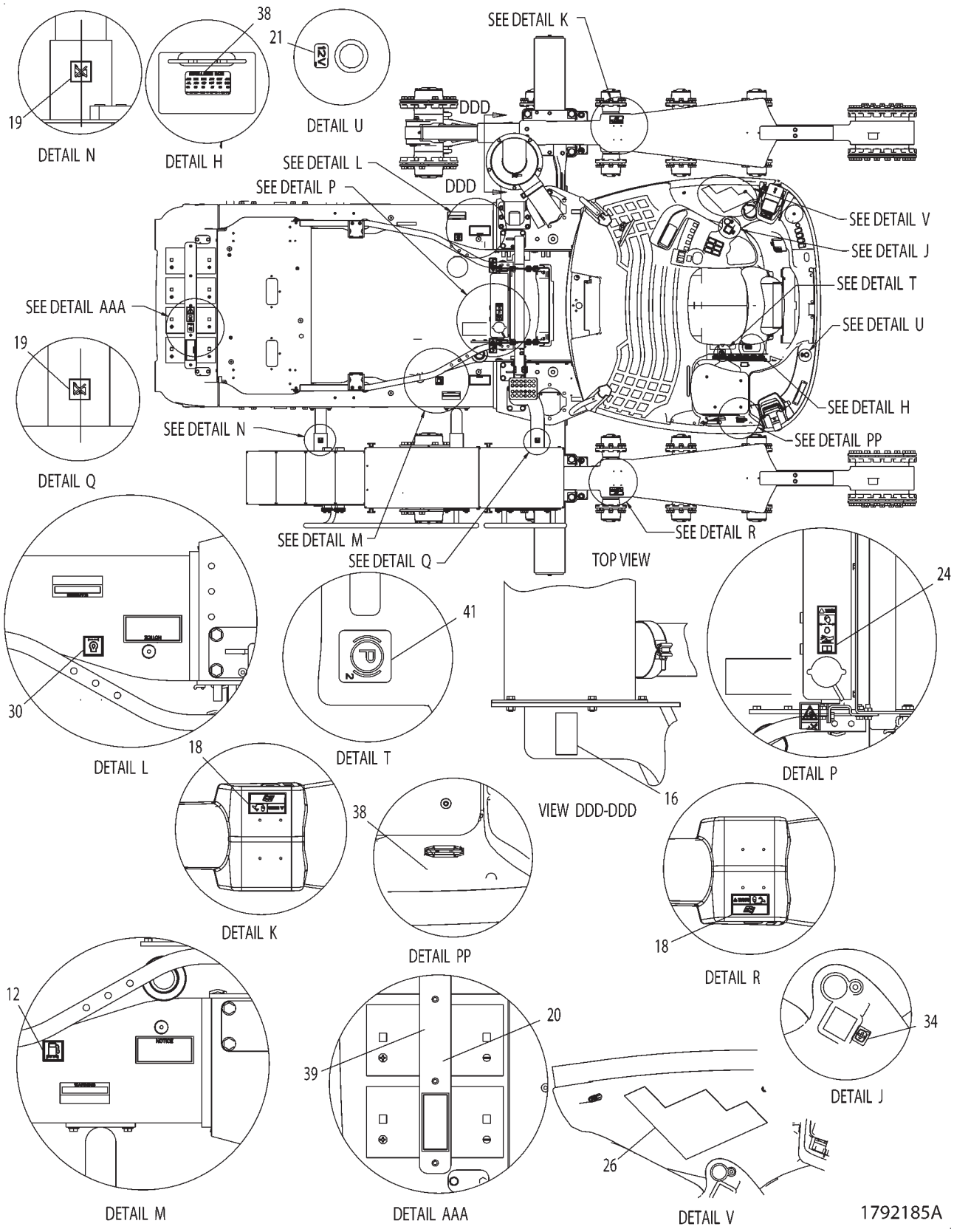

FILM GP - & PLATES - 179-2185

ROW & SPECIAL
(PAGE 1 OF 5)

ITEM	NUMBER	QTY	DESCRIPTION
-	179-2185	--	FILM GP-PAINT &
12	501103D1	--	FILM-INST (FUEL FILTER)
16	501107D1	--	FILM-WARNING (HOT SURFACE)
18	501250D1	--	FILM-WARNING
19	501251D1	--	FILM-NO STEP
20	501252D1	--	FILM-IDENT (12V)
21	501253D1	--	FILM-IDENT (12V) * **
24	501268D1	--	FILM-WARNING
26	501270D1	1	FILM-FUSE PANEL
30	501276D1	--	FILM-ENGINE OIL FILTER(INST)
34	501281D1	--	FILM-MIRRORS *
38	501286D1	--	FILM-INSTALLATION DATE *
39	501287D1	--	FILM-WARNING **
41	501289D1	--	FILM-PARK BRAKE *
-	501500D1	1	DECAL SHEET-CAB (INCLUDES * ITEMS)
-	501272D1	--	FILM ALTERNATE EXIT *
-	501405D1	--	FILM-NOTICE (WIDE GAUGE) *
-	501256D1	--	FILM-WIPER BASIC *
-	501406D1	--	FILM-WIPER DELUXE *
-	501274D1	--	FILM-WARNING *
-	501503D1	1	DECAL SHEET-VEHICLE (SEE BREAKDOWN)
-	501504D1	1	DECAL SHEET-VEHICLE (INCLUDES ** ITEMS)
-	501277D1	--	PLATE-INST BATTERY **
-	501306D1	--	FILM-AIR CLEANER **
-	501267D1	--	FILM-HYD COUPLER **

PART OF 179-1952 BASE COMMON AR

1792185A
PR: t05i29k58b0566

FILM GP - & PLATES - 179-2185
ROW & SPECIAL
(PAGE 2 OF 5)

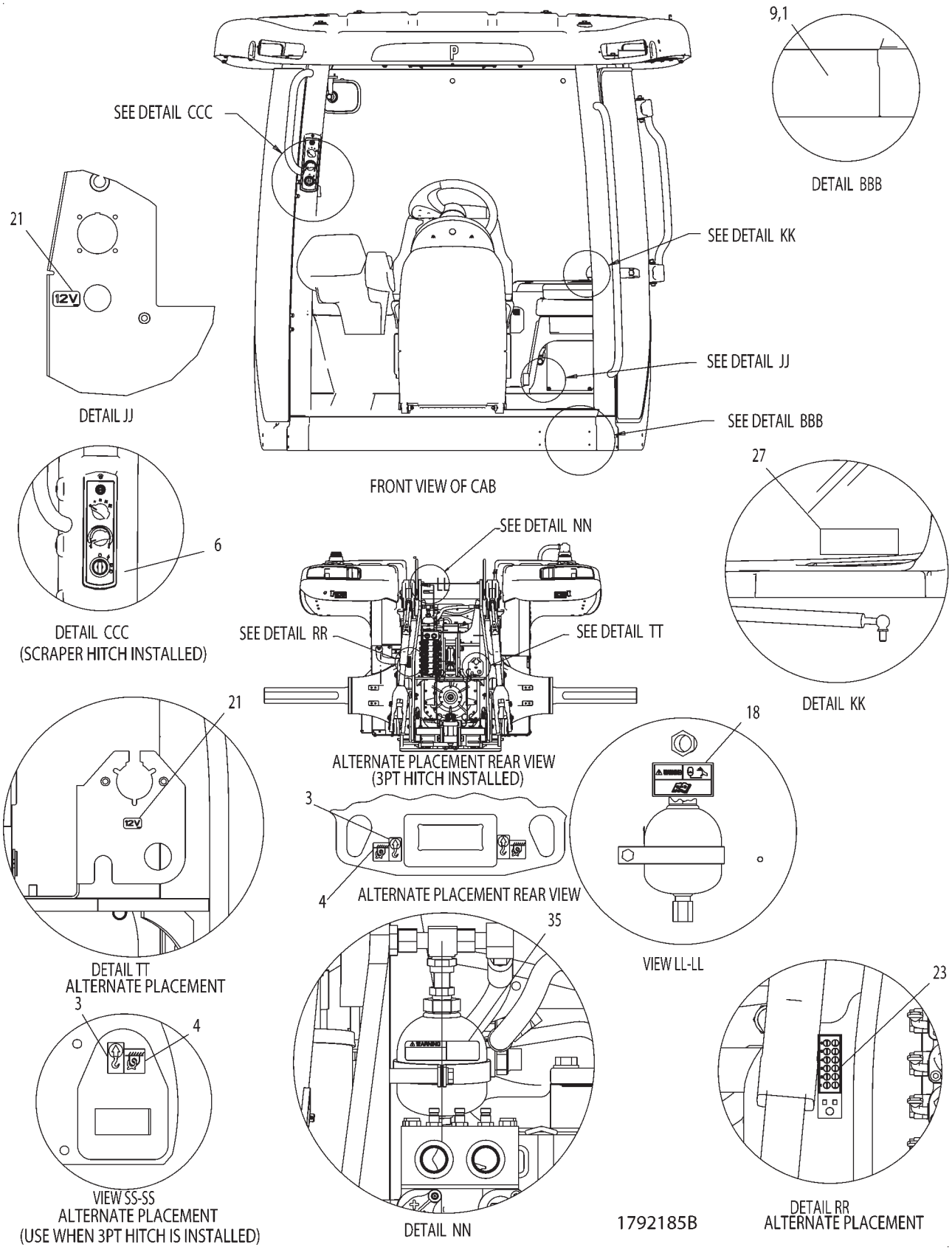

FILM GP - & PLATES - 179-2185

ROW & SPECIAL
(PAGE 2 OF 5)

ITEM	NUMBER	QTY	DESCRIPTION
-	179-2185	--	FILM GP-PAINT &
1	502619D1	1	PLATE-ROPS (NOT SERVICED)
3	500371D1	--	FILM-LIFT
4	500372D1	--	FILM-TIE-DOWN
6	CH5P-8500	2	KEY
9	CH8C-3348	2	RIVET-BLIND 1.6-3.18GRIPX3.18
18	501250D1	--	FILM-WARNING
21	501253D1	--	FILM-IDENT (12V) * **
23	501267D1	--	FILM-HYD COUPLERS (INST) **
27	501272D1	--	FILM-ATERNATE EXIT *
35	501283D1	--	FILM-WARNING
-	501500D1	1	DECAL SHEET-CAB (INCLUDES * ITEMS)
-	501289D1	--	FILM-PARK BRAKE *
-	501405D1	--	FILM-NOTICE (WIDE GAUGE) *
-	501256D1	--	FILM-WIPER BASIC *
-	501406D1	--	FILM-WIPER DELUXE *
-	501281D1	--	FILM-MIRRORS *
-	501286D1	--	FILM-INSTALLATION DATE *
-	501274D1	--	FILM-WARNING *
-	501503D1	1	DECAL SHEET-VEHICLE (SEE BREAKDOWN)
-	501504D1	1	DECAL SHEET-VEHICLE (INCLUDES ** ITEMS)
-	501287D1	--	FILM-WARNING **
-	501277D1	--	PLATE-INST BATTERY **
-	501306D1	--	FILM-AIR CLEANER **

PART OF 179-1952 BASE COMMON AR

1792185B
PR: t05i29k58b0567

FILM GP - & PLATES - 179-2185
ROW & SPECIAL
(PAGE 3 OF 5)

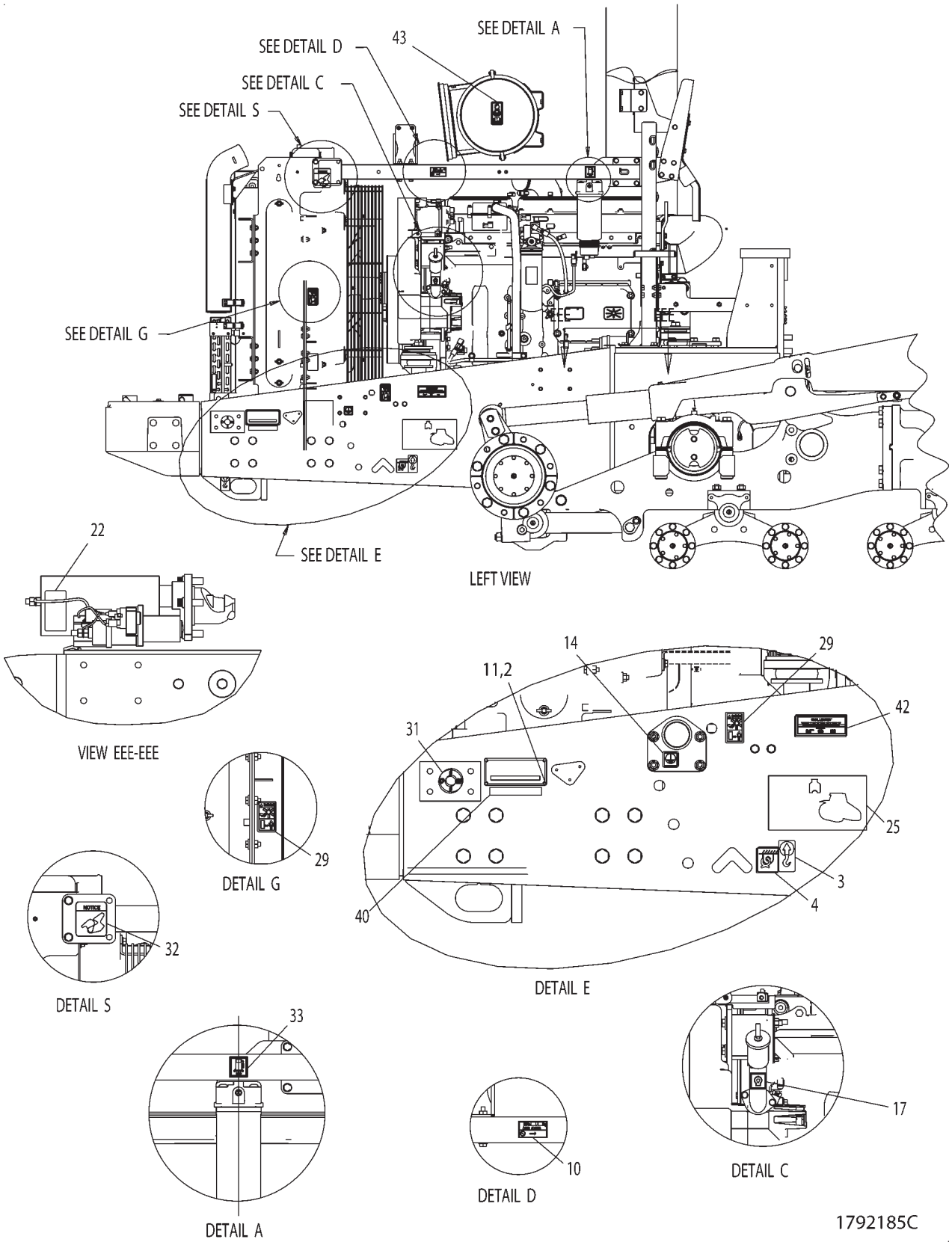

FILM GP - & PLATES - 179-2185

ROW & SPECIAL
(PAGE 3 OF 5)

ITEM	NUMBER	QTY	DESCRIPTION
-	179-2185	--	FILM GP-PAINT &
2	222-2281	1	PLATE-SERIAL NO. (NOT SERVICED)
3	500371D1	--	FILM-LIFT
4	500372D1	--	FILM-TIE-DOWN
10	110-6393	1	PLATE-INST (A/C)
11	CH168-8389	4	TACK-FASTENER (METAL)
14	501105D1	--	FILM-GROUND GEN
17	501108D1	--	FILM-INSTRUCTION
22	501258D1	--	FILM-NOTICE
25	501269D1	--	FILM-NOTICE (SHIPPING)
29	501275D1	--	FILM-WARNING (FAN)
31	501277D1	--	FILM-BATTERY (INST) **
32	501278D1	--	FILM-BELT (ROUTING)
33	501280D1	--	FILM-WATER SEPARATOR
40	501288D1	--	FILM-CLEAR COVER
42	501305D1	--	FILM-PATENT
43	501306D1	--	FILM-AIR CLEANER **
-	501500D1	1	DECAL SHEET-CAB (INCLUDES * ITEMS)
-	501289D1	--	FILM-PARK BRAKE *
-	501272D1	--	FILM ALTERNATE EXIT *
-	501405D1	--	FILM-NOTICE (WIDE GAUGE) *
-	501256D1	--	FILM-WIPER BASIC *
-	501406D1	--	FILM-WIPER DELUXE *
-	501253D1	--	FILM-IDENT (12V) * **
-	501281D1	--	FILM-MIRRORS *
-	501286D1	--	FILM-INSTALLATION DATE *
-	501274D1	--	FILM-WARNING *
-	501503D1	1	DECAL SHEET-VEHICLE (SEE BREAKDOWN)
-	501504D1	1	DECAL SHEET-VEHICLE (INCLUDES ** ITEMS)
-	501253D1	--	FILM-IDENT (12V) * **
-	501287D1	--	FILM-WARNING **
-	501267D1	--	FILM-HYD COUPLERS (INST) **

PART OF 179-1952 BASE COMMON AR

1792185C
PR: t05i29k58b0568

FILM GP - & PLATES - 179-2185
ROW & SPECIAL
(PAGE 4 OF 5)

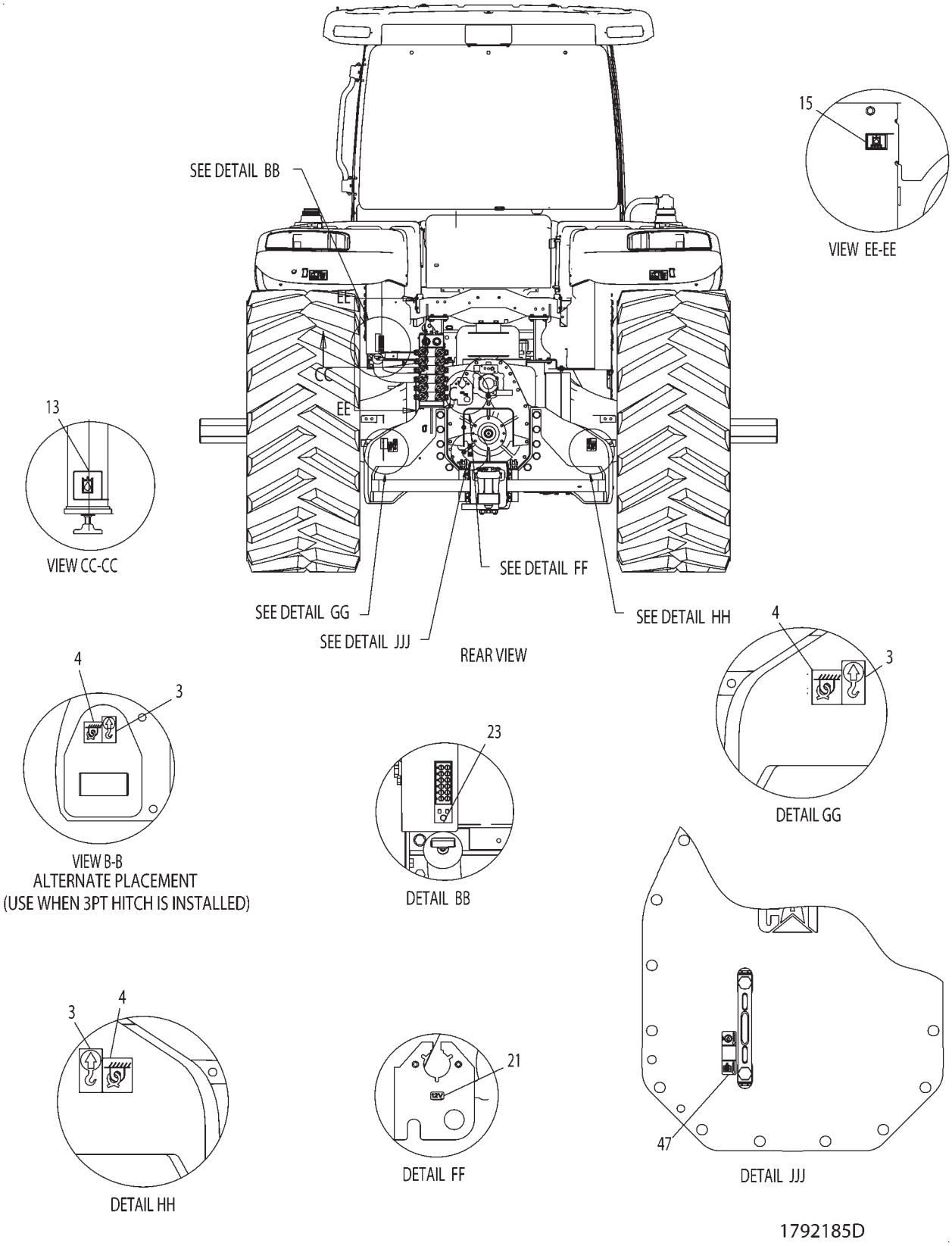

FILM GP - & PLATES - 179-2185

ROW & SPECIAL
(PAGE 4 OF 5)

ITEM	NUMBER	QTY	DESCRIPTION
-	179-2185	--	FILM GP-PAINT &
3	500371D1	--	FILM-LIFT
4	500372D1	--	FILM-TIE-DOWN
13	501104D1	--	FILM-HYDRAULIC OIL
15	501106D1	--	FILM-IDENT (HYD OIL FILTER)
21	501253D1	--	FILM-IDENT (12V) * **
23	501267D1	--	FILM-HYD COUPLERS (INST) **
-	501500D1	1	DECAL SHEET-CAB (INCLUDES * ITEMS)
-	501289D1	--	FILM-PARK BRAKE *
-	501272D1	--	FILM ALTERNATE EXIT *
-	501405D1	--	FILM-NOTICE (WIDE GAUGE) *
-	501256D1	--	FILM-WIPER BASIC *
-	501406D1	--	FILM-WIPER DELUXE *
-	501281D1	--	FILM-MIRRORS *
-	501286D1	--	FILM-INSTALLATION DATE *
-	501274D1	--	FILM-WARNING *
-	501503D1	1	DECAL SHEET-VEHICLE (SEE BREAKDOWN)
-	501504D1	1	DECAL SHEET-VEHICLE (INCLUDES ** ITEMS)
-	501287D1	--	FILM-WARNING **
-	501277D1	--	FILM-BATTERY (INST) **
-	501306D1	--	FILM-AIR CLEANER **
47	501307D1	--	FILM-XMSN OIL FILL

PART OF 179-1952 BASE COMMON AR

1792185D
PR: t05i29k58b0569

FILM GP - & PLATES - 179-2185

ROW & SPECIAL
(PAGE 5 OF 5)

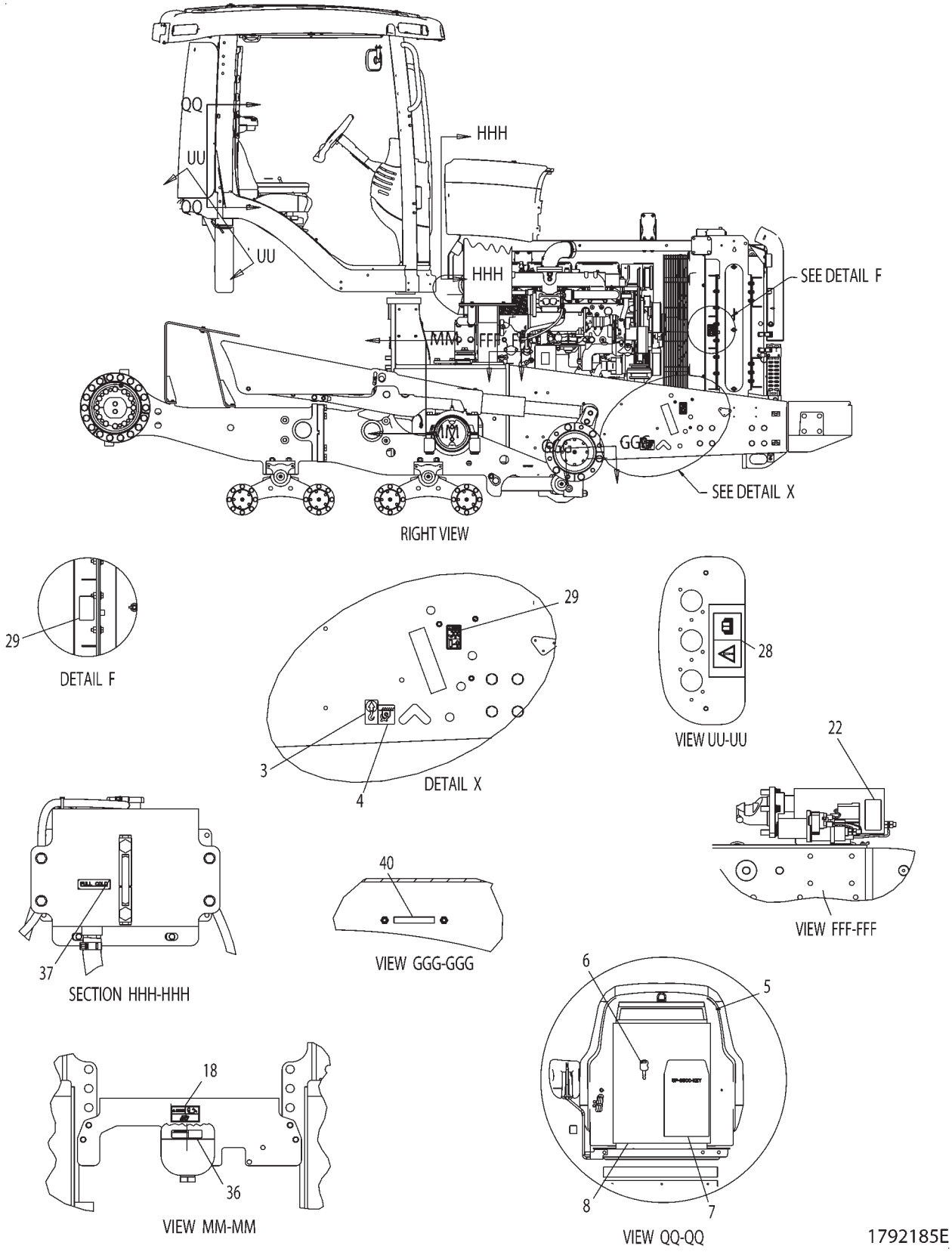

1792185E

FILM GP - & PLATES - 179-2185

ROW & SPECIAL
(PAGE 5 OF 5)

ITEM	NUMBER	QTY	DESCRIPTION
-	179-2185	--	FILM GP-PAINT &
3	500371D1	--	FILM-LIFT
4	500372D1	--	FILM-TIE-DOWN
5	CH5P-7958	1	SLEEVE-CABLE SPLICE 2.38 OD
6	CH5P-8500	2	KEY
7	CH6V-2405	1	ENVELOPE-KEY
8	CH7F-3400	1	BAG-POLYETHYLENE 305 X 380
18	501250D1	--	FILM-WARNING
22	501258D1	--	FILM-NOTICE
28	501274D1	--	FILM-NOTICE *
29	501275D1	--	FILM-WARNING (FAN)
36	501284D1	--	FILM-WARNING
37	501285D1	--	FILM-FULL COLD
40	501288D1	--	FILM-CLEAR COVER
-	501500D1	1	DECAL SHEET-CAB (INCLUDES * ITEMS)
-	501289D1	--	FILM-PARK BRAKE *
-	501272D1	--	FILM ALTERNATE EXIT *
-	501405D1	--	FILM-NOTICE (WIDE GAUGE) *
-	501256D1	--	FILM-WIPER BASIC *
-	501406D1	--	FILM-WIPER DELUXE *
-	501253D1	--	FILM-IDENT (12V) * **
-	501281D1	--	FILM-MIRRORS *
-	501286D1	--	FILM-INSTALLATION DATE *
-	501503D1	1	DECAL SHEET-VEHICLE (SEE BREAKDOWN)
-	501504D1	1	DECAL SHEET-VEHICLE (INCLUDES ** ITEMS)
-	501253D1	--	FILM-IDENT (12V) * **
-	501287D1	--	FILM-WARNING **
-	501277D1	--	FILM-BATTERY (INST) **
-	501306D1	--	FILM-AIR CLEANER **
-	501267D1	--	FILM-HYD COUPLERS (INST) **

PART OF 179-1952 BASE COMMON AR

1792185E
PR: t05i29k58b0570

DECAL SHEET-VEHICLE - 501503D1

1

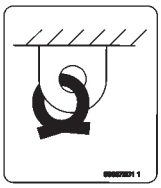
2

3

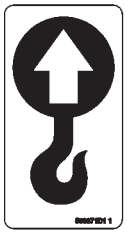
4

5

6

7

8

9

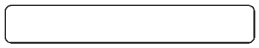
10

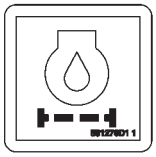
11

14

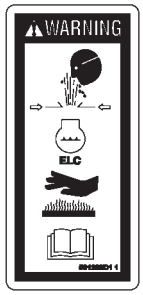

18

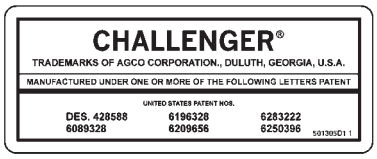

19

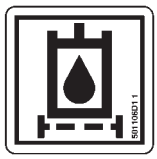
12

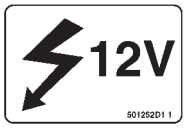

15

13

16

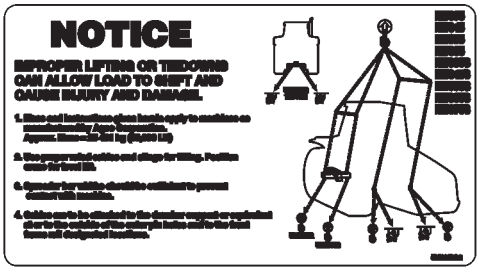

20

17

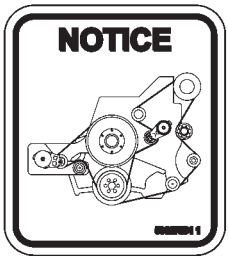

21

22

23

24

501503DC

DECAL SHEET-VEHICLE - 501503D1

ITEM	NUMBER	QTY	DESCRIPTION
-	501503D1	--	DECAL SHEET-VEHICLE [A]
1	501250D1	4	FILM-WARNING
2	500372D1	4	FILM-TIE-DOWN
3	501275D1	2	FILM-WARNING (FAN)
4	500371D1	4	FILM-LIFT
5	501251D1	2	FILM-NO STEP
6	501105D1	1	FILM-GROUND GEN
7	501285D1	1	FILM-FULL COLD
8	501104D1	1	FILM-HYDRAULIC OIL
9	501108D1	1	FILM-INSTRUCTION
10	501288D1	2	FILM-CLEAR COVER
11	501276D1	1	FILM-ENGINE OIL FILTER(INST)
12	501106D1	1	FILM-IDENT (HYD OIL FILTER)
13	501280D1	1	FILM-WATER SEPARATOR
14	501103D1	1	FILM-INST (FUEL FILTER)
15	501252D1	1	FILM-IDENT (12V)
16	501284D1	1	FILM-WARNING
17	501283D1	1	FILM-WARNING
18	501268D1	1	FILM-WARNING
19	501305D1	1	FILM-PATENT
20	501269D1	1	FILM-NOTICE (SHIPPING)
21	501278D1	1	FILM-BELT (ROUTING)
22	501107D1	1	FILM-WARNING (HOT SURFACE)
23	501258D1	2	FILM-NOTICE
24	501307D1	1	FILM-XMSN OIL FILL

[A] PART OF 186-0979 HITCH AR

501503DC
PR: t05i29k58b0571

DECAL SHEET-VEHICLE - 501504D1

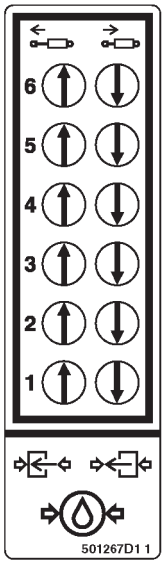

1

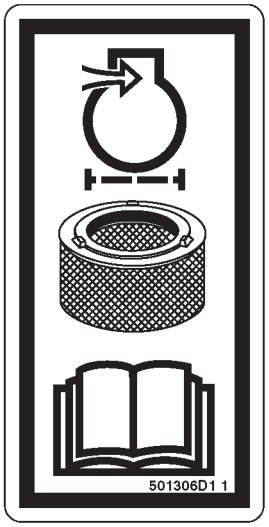

2

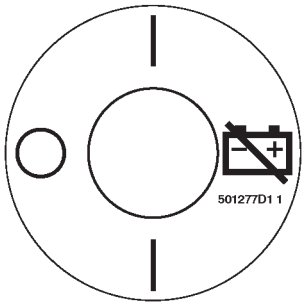

3

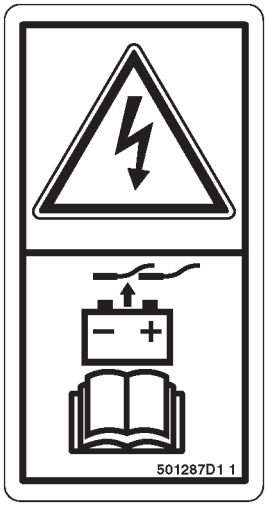

4

5

501504DB

DECAL SHEET-VEHICLE - 501504D1

ITEM	NUMBER	QTY	DESCRIPTION
-	501504D1	--	DECAL SHEET-VEHICLE [A]
1	501267D1	1	FILM-WARNING
2	501306D1	1	FILM-TIE-DOWN
3	501277D1	1	FILM-WARNING (FAN)
4	501287D1	1	FILM-LIFT
5	501253D1	1	FILM-NO STEP

[A] PART OF 169-0028 HITCH AR

501504DB
PR: t05i29k58b0572

DECAL SHEET-VEHICLE
501505D1
EAME ONLY

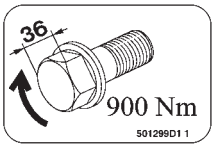

1

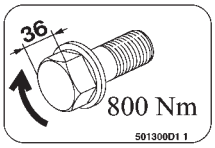

2

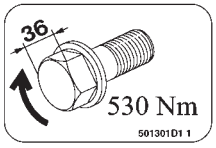

3

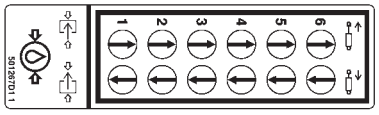

4

5

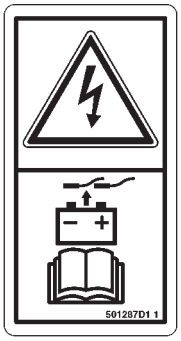

6

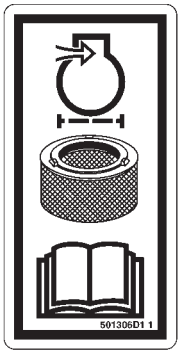

7

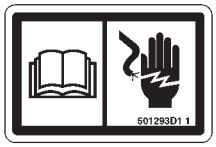

8

9

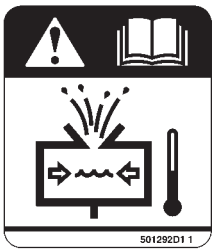

10

23

11

12

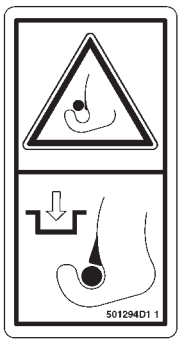

13

14

15

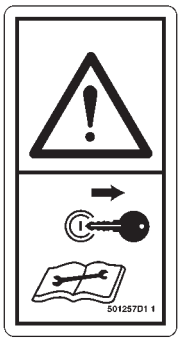

24

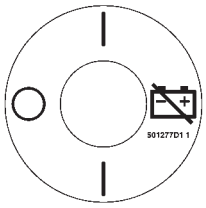

16

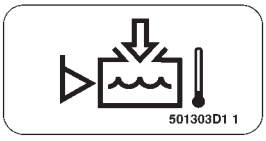

18

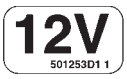

17

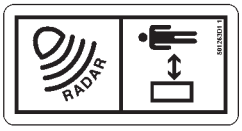

22

19

20

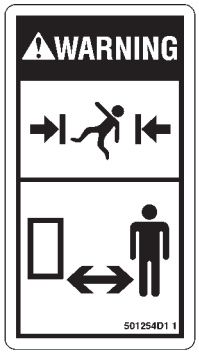

21

501505DB

DECAL SHEET-VEHICLE

501505D1
EAME ONLY

ITEM	NUMBER	QTY	DESCRIPTION
-	501505D1	--	DECAL SHEET-VEHICLE [A]
1	501299D1	4	FILM-TIGHTENING
2	501300D1	2	FILM-TIGHTENING
3	501301D1	2	FILM-TIGHTENING
4	501267D1	1	FILM-HYD COUPLER
5	501261D1	1	FILM-NOTICE
6	501287D1	1	FILM-WARNING (VOLTAGE)
7	501306D1	1	FILM-AIR CLEANER
8	501293D1	1	FILM-WARNING ELE
9	501259D1	1	FILM-WARNING
10	501292D1	1	FILM-WARNING
11	501290D1	2	FILM-CRUSH/SEVER
12	501264D1	2	FILM-NOTICE PTO WARNING
13	501294D1	2	FILM-NOTICE
14	501295D1	1	FILM-HITCH
15	501291D1	2	FILM-BATTERY
16	501277D1	2	PLATE-INST (BATTERY)
17	501253D1	1	FILM-IDENT (12V)
18	501303D1	1	FILM-COOLANT
19	501262D1	4	FILM-NOTICE ACCUMULATOR WRNG
20	501296D1	1	FILM-HITCH
21	501254D1	2	FILM-WARNING
22	501263D1	2	FILM-NOTICE BYSTANDERS
23	501260D1	2	FILM-NOTICE SERVICE MANUAL
24	501257D1	2	FILM-NOTICE SERVICE MANUAL

[A] PART OF 186-0979 HITCH AR

501505DB
PR: t05i29k58b0573

DECAL SHEET-COMPLETING AR - 501513D1
ENGLISH

WARNING

Improper jumper cable connections can cause explosion resulting in personal injury.

Use only the recommended locations to connect jumper cables. Follow procedure in the operation & maintenance manual.

501384D1 1

1

WARNING

Failure to follow these instructions can result in operator or bystander injury

- **Pull only from drawbar. Pulling from any other point may cause overturn.**
- **Use safety chains to tow equipment.**

501372D1 1

2

WARNING

Microwave radiation may cause eye damage. To avoid injury to eyes, do not look directly into the face of the ground speed sensor.

501342D1 1

3

CAUTION

The instructional seat has been provided only for training operators or diagnosing machine problems. Keep all riders off the tractor and equipment. Always wear your seat belt.

501214D1 1

4

WIRE ACCESS

501366D1 1

5

WARNING

Do not operate or work on this machine unless you have read and understand the instructions and warnings in the operation and maintenance manuals. Failure to follow the instructions or heed the warnings could result in injury or death. Contact any authorized dealer for replacement manuals. proper care is your responsibility.

NOTICE

Operate engine at low idle for five minutes before shutdown after full load operation.

Sustained operation of this machine at full-power drawbar loads at ground speed faster 6.4 km/h (4 mph) will reduce powertrain life and may void warranty due to overload conditions. Refer to operator's manual.

6

SERVICE GUIDE

10 HOUR/DAILY CHECKS
1. CHECK ENGINE COOLANT LEVEL
2. CHECK ENGINE OIL LEVEL
3. CHECK FUEL/WATER SEPARATOR BOWL AS.
4. CHECK FUEL LEVEL
5. INSPECT UNDERCARRIAGE
6. CHECK HYDRAULIC/TRANSMISSION FLUID LEVEL

50 HOURS
7. DRAIN AIR TANK (IF EQUIPPED)
8. LUBRICATE 3 PT HITCH (IF EQUIPPED)

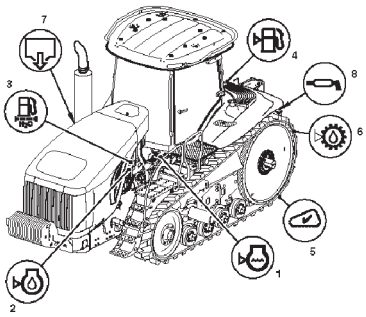

	PART NUMBER	APPROX. CAPACITY
CAB		
RECIRCULATION AIR FILTER	501153D1	
FRESH AIR FILTER	501161D1	
A/C SYSTEM	R134a	2.3 kg (5.0 lb)
ENGINE		
ENGINE OIL FILTER	504594D1	
PRIMARY FUEL FILTER	CH11F-9771	
SECONDARY FUEL FILTER	CH11F-9762	
ENGINE AIR FILTER (PRIMARY)		
MT835/MT845	CH9I-2506	
MT855/MT865	CH9I-2509	
ENGINE AIR FILTER (SECONDARY)		
MT835/MT845	CH9I-2508	
MT855/MT865	CH9I-2510	
OIL* (DEO SAE 10W30)		
MT835/MT845		30 L (8 gal)
MT855/MT865		34 L (9 gal)
COOLANT (EXTENDED LIFE 50/50 MIX)		
MT835/MT845		44 L (12 gal)
MT855/MT865		48 L (13 gal)
HYDRAULIC/TRANSMISSION		
IMPLEMENT STEERING FILTER	501768D2	
TRANSMISSION FILTER	501768D2	
IMPLEMENT CASE DRAIN FILTER	501771D1	
OIL (MTO SAE 10W30)		287 L (75.5 gal)
BELTS		
ACCESSORY	500685D1	
FAN		
MT835/MT845	197-6290	
MT855	197-6291	
MT865	197-6292	
BATTERIES	502445D1	1000 CCA/ PER BATTERY
LUBRICATION		
HITCH (GREASE NLGI GRADE 2-MPGM (GRMA-S2))		1 kg (25.4 oz)

* SEE OMM FOR TEMPERATURE APPLICATION RANGE

501307D1 3

7

WARNING

Personal injury could result from improperly coupled implements. Be certain latches are fully engaged on both sides before transporting or pulling the implement.

501342D1 1

8

WARNING

To avoid injury do not stand on or between implement and tractor while operating lift control.

501335D1 1

9

WARNING

Failure to follow these instructions can result in serious operator or bystander injury.

- **Stop PTO and engine before servicing tractor or changing implements.**
- **Do not operate with unshielded PTO.**

501328D1 1

10

NOTICE

Use only the recomended locations for jump start cable connections. Follow the procedure in the operation & maintenance manual for jump start cable use.

501370D1 1

11

501513DD

DECAL SHEET-COMPLETING AR - 501513D1

ENGLISH

ITEM	NUMBER	QTY	DESCRIPTION
-	179-2248	--	COMPLETING AR-ENGLISH (NOT SERVICED)
-	501513D1	--	DECAL SHEET [A] (INCLS ITEMS 1-11)
1	501384D1	1	FILM-WARNING
2	501377D1	1	FILM-WARNING
3	501349D1	2	FILM-WARNING
4	501314D1	1	FILM-CAUTION (ENGLISH)
5	501356D1	1	FILM-WIRE ACCESS
6	501321D1	1	FILM-WARN UNIV (ENGLISH)
7	501397D1	1	FILM-SERVICE INFO
8	501342D1	1	FILM-WARNING
9	501335D1	2	FILM-WARNING
10	501328D1	1	FILM-WARNING (ENGLISH)
11	501370D1	2	FILM-NOTICE

[A] PART OF 169-0028 HITCH AR;
179-2248 COMPLETING AR

501513DA
PR: t05i29k58b0574

DECAL SHEET-COMPLETING AR - 501514D1
DUTCH

ONDERHOUDSOVERZICHT

CONTROLE OM DE 10 UUR/DAGELIJKS
1. Controleer motorkoelvloeistofpeil
2. Controleer motoroliepeil
3. Controleer brandstof/waterafscheiderpotje
4. Controleer brandstofpeil
5. Inspecteer onderwagen
6. Controleer hydrauliek/ transmissievloeistofpeil

OM DE 50 UUR
7. Tap luchtvat (indien aanwezig) af
8. Smeer 3-puntstrekinrichting (indien aanwezig)

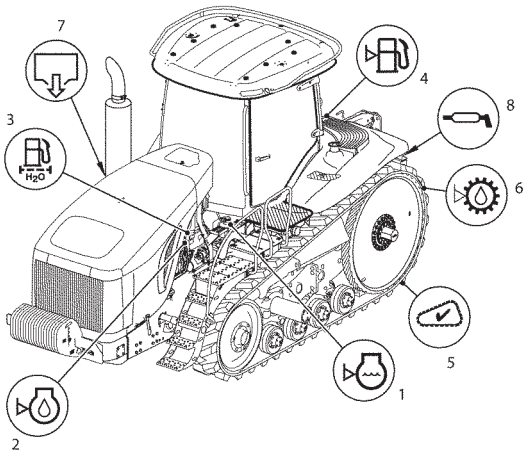

CABINE	ONDER-DEELNR.	INHOUD (ONG.)
LUCHTCIRCULATIEFILTER	501153D1	
BUITENLUCHTFILTER	501881D1	
AIRCO-SYSTEEM	R134a	23 hg (5,0 lb)
MOTOR		
MOTOROLIEFILTER	504594D1	
BRANDSTOFVOORFILTER	CH1R-0771	
SECUNDAIR BRANDSTOFFILTER	CH1R-0762	
MOTORLUCHTFILTER (VOORFILTER)		
MT835/ MT845	CH6I-2505	
MT855/ MT865	CH6I-2509	
MOTORLUCHTFILTER (SECUNDAIR)		
MT835/ MT845	CH6I-2506	
MT855/ MT865	CH6I-2510	
OLIE* (DEO SAE 10W30)		
MT835/ MT845		30 L (8 gal)
MT855/ MT865		34 L (9 gal)
KOELVLOEISTOF (EXTENDED LIFE 50:50)		
MT835/ MT845		44 L (12 gal)
MT855/ MT865		48 L (13 gal)
HYDRAULISCH SYSTEEM/TRANSMISSIE		
STUURSYSTEEMFILTER WERKTUIG	501766D2	
TRANSMISSIEFILTER	501766D2	
CARTERAFTAPFILTER WERKTUIG	501771D1	
OLIE (MTO SAE 10W30)		267 L (70,5 gal)
RIEMEN		
HULPUITRUSTING	500685D1	
VENTILATOR		
MT835/ MT845	197-6290	
MT855	197-6291	
MT865	197-6292	
ACCU'S	502445D1	1000 CCA/ ACCU
SMERING		
TREKINRICHTING (SMEERVET NLGI 2-MPGM (3% MoS2))		1 hg (25,4 oz)

* Zie bedienings- en onderhoudshandleiding voor temperatuurtoepassingsbereik

Dutch 501394D1 3

7

⚠ WAARSCHUWING

Verkeerd aansluiten van hulpstartkabels kan ontploffing veroorzaken wat lichamelijk letsel tot gevolg heeft.

Gebruik uitsluitend de aanbevolen plaatsen om hulpstartkabels te verbinden. Volg de procedure in de bedienings- en onderhoudshandleiding.

501388D1 1

1

⚠ WAARSCHUWING

Het niet opvolgen van deze instructies kan letsel van de machinist of omstanders tot gevolg hebben.

- Trek alleen met de trekstang. Trekken met een ander punt kan omkantelen veroorzaken.
- Gebruik veiligheidskettingen om materieel te slepen.

501378D1 1

2

⚠ WAARSCHUWING

Microgolfstralen kunnen ogen beschadigen. Om oogletsel te vermijden, niet rechtstreeks naar plaat van grondsnelheid sensor kijken.

501350D1 1

3

⚠ PAS OP

De stoel voor de instructeur is uitsluitend bedoeld voor het trainen van machinisten of het vaststellen van problemen met de machine. Laat niemand meerijden op de trekker en uitrusting. Draag altijd uw veiligheidsgordel.

501319D1 1

4

TOEGANG TOT

501357D1 1

5

⚠ WAARSCHUWING

Alleen deze machine gebruiken en eraan werken als u de instructies en waarschuwingen in de bedienings- en onderhoudshandleidingen hebt gelezen en begrijpt. Het niet opvolgen van de instructies of het niet in acht nemen van de waarschuwingen kan ernstig of dodelijk letsel tot gevolg hebben. Neem contact op met een erkende dealer voor nieuwe handleidingen. U bent verantwoordelijk voor het juiste onderhoud.

OPGELET

Laat de motor vijf minuten met laagtoeren onbelast draaien alvorens hem stop te zetten na gebruik bij vollast. Aanhoudende bediening van deze machine bij maximale belasting op de trekstang en rijsnelheden onder 6,4 km/u verkorten de levensduur van de aandrijving en kunnen de garantie ongeldig maken vanwege overbelasting. Raadpleeg de gebruikers-handleiding.

Dutch 501322D1 1

6

⚠ WAARSCHUWING

Voorkom letsel: ga niet op of tussen het werktuig en de trekker staan terwijl de hefhendel wordt bediend.

501336D1 1

9

⚠ WAARSCHUWING

Verkeerd aangekoppelde werktuigen kunnen lichamelijk letsel veroorzaken. Verzekert u ervan dat pallan aan beide zijden goed vastzitten alvorens het werktuig te vervoeren of te trekken.

501343D1 1

8

⚠ WAARSCHUWING

Het niet opvolgen van deze instructies kan ernstig letsel van de machinist of omstanders tot gevolg hebben.

- Stop de aftakas en motor alvorens onderhoud of reparaties aan de trekker uit te voeren of werktuigen te verwisselen.
- Niet gebruiken met aftakas zonder afschermplaat.

501329D1 1

10

OPGELET

Gebruik uitsluitend de aanbevolen plaatsen voor hulpstartkabelverbindingen. Volg de procedure in de bedienings- en onderhoud-shandleiding voor het gebruik van hulpstart-kabels.

501374D1 1

11

DECAL SHEET-COMPLETING AR - 501514D1
DUTCH

ITEM	NUMBER	QTY	DESCRIPTION
-	179-2252	--	COMPLETING AR-DUTCH (NOT SERVICED)
-	501514D1	--	DECAL SHEET [A] (INCLS ITEMS 1-11)
1	501388D1	1	FILM-WARNING
2	501378D1	1	FILM-WARNING
3	501350D1	2	FILM-WARNING
4	501319D1	1	FILM-CAUTION (DUTCH)
5	501357D1	1	FILM-WIRE ACCESS (DUTCH)
6	501322D1	1	FILM-WARNING UNIV (DUTCH)
7	501394D1	1	FILM-SERVICE INFO (DUTCH)
8	501343D1	1	FILM-WARNING
9	501336D1	2	FILM-WARNING (DUTCH)
10	501329D1	1	FILM-WARNING
11	501374D1	2	FILM-NOTICE

[A] PART OF 179-2252 COMPLETING AR

501514DA
PR: t05i29k58b0575

DECAL SHEET-COMPLETING AR - 501515D1
FRENCH

GUIDE D'ENTRETIEN

CONTRÔLES TOUTES LES 10 HEURES/TOUS LES JOURS
1. Contrôler le niveau de liquide de refroidissement moteur
2. Contrôler le niveau d'huile moteur
3. Contrôler la cuve du séparateur d'eau/carburant
4. Contrôler le niveau de carburant
5. Inspecter le train de roulment
6. Contrôler le niveau de liquide hydraulique/boîte de vitesses

TOUTES LES 50 HEURES
7. Vidanger le réservoir d'air (selon équipement)
8. Graisser le relevage à trois points (selon équipement)

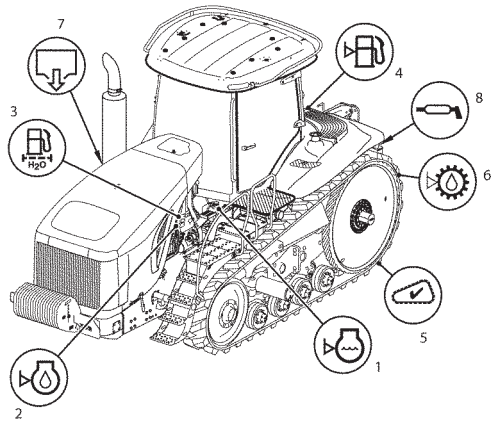

CABINE	NO PIÈCE	CONTENANCE APPROX.
FILTRE DE RECIRCULATION D'AIR	501153D1	
FILTRE À AIR FRAIS	501881D1	
CLIMATISATION	R134a	23 hg (5,0 lb)
MOTEUR		
FILTRE À HUILE MOTEUR	504594D1	
FILTRE À CARBURANT PRIMAIRE	CH1R-0771	
FILTRE À CARBURANT SECONDAIRE	CH1R-0762	
FILTRE À AIR (PRIMAIRE) DU MOTEUR		
MT835/MT845	CH6I-2505	
MT855/MT865	CH6I-2509	
FILTRE À AIR (SECONDAIRE) DU MOTEUR		
MT835/MT845	CH6I-2506	
MT855/MT865	CH6I-2510	
HUILE* (DEO SAE 10W30)		
MT835/MT845		30 L (8 gal)
MT855/MT865		34 L (9 gal)
LIQUIDE DE REFROIDISSEMENT (LONGUE DURÉE MÉLANGE 50/50)		
MT835/MT845		44 L (12 gal)
MT855/MT865		48 L (13 gal)
HYDRAULIQUE/BOÎTE DE VITESSES		
FILTRE DE DIRECTION/ÉQUIPEMENT	501766D2	
FILTRE DE BOÎTE DE VITESSES	501766D2	
FILTRE DE RETOUR (ÉQUIPEMENT)	501771D1	
HUILE (MTO SAE 10W30)		267 L (70,5 gal)
COURROIES		
ACCESSOIRES	500685D1	
VENTILATEUR		
MT835/MT845	197-6290	
MT855	197-6291	
MT865	197-6292	
BATTERIES	502445D1	1000 CCA/ BATTERIE
GRAISSAGE		
RELEVAGE À TROIS POINTS (Graisse NLGI No 2-MPGM (3%MoS2))		1 hg (25,4 oz)

*Voir la plage de température dans le guide d'utilisation et d'entretien

French 501391D1 3

7

DANGER

Des connexions de câbles volants incorrectes peuvent causer une explosion entraînant des blessures.

Utiliser uniquement les emplacements conseillés pour brancher les câbles volants. Suivre la procédure dans le guide d'utilisation et d'entretien.

501385D1 1

1

DANGER

L'inobservation de se conformer à ces consignes peut entraîner des blessures au conducteur ou aux personnes à proximité.

- Tirer uniquement à partir de la barre d'attelage. Il y a risque de renversement si l'on tire à partir d'un autre point.
- Utiliser des chaînes de sécurité pour remorquer l'équipment.

501379D1 1

2

DANGER

Les rayons émis par les microondes peuvent provoquer des lésions aux yeux. Pour éviter ce risque, ne regardez pas le capteur de vitesse directement en face.

501351D1 1

3

DANGER

Ne pas conduire cette machine et ne pas travailler dessus sans avoir lu et bien assimilé les instructions et les consignes donnés dans le manuel d'utilisation et d'entretien. Toute entorse est dangereuse et risque d'être à l'origine d'accidents graves, voire mortels. Si le manuel est à remplacer, s'adresser au concessionnaire caterpillar pour en obtenir un autre. Il incombe à l'utilisateur de prendre soin de cette machine.

REMARQUE

Faire fonctionner le moteur au régime de ralenti pendant cinq minutes avant de couper le moteur après tout fonctionnement à pleine charge.
Une utilisation invensive de cette machine avec un effort à la barre maximum en Se ou dans un rapport inférieur (vitesse inférieure à 6,4 km/h) peut réduire la durée de service de la transmission. Se référer au guide d'utilisation.

French 501323D1 1

6

ATTENTION

Le siège du formateur est fourni uniquement pour les conducteurs en formation et pour les diagnostiques de machine. Les conducteurs doivent rester à l'écart du tracteur et de l'equipement. Toujours boucler la ceinture de sécurité.

501315D1 1

4

ACCÈS AUX CÂBLES

501358D1 1

5

DANGER

Des équipements incorrectement accouplés risquent de provoquer des accidents corporels. assurez-vous que les verrous sont complètement engagés des deux côtés avant de transporter ou de tirer l'équipement.

501344D1 1

8

DANGER

Afin d'éviter toute blessure, ne pas monter sur l'equipement ou rester entre l'équipment et le tracteur lorsque l'on utilise la commande de levage.

501337D1 1

9

DANGER

L'inobservation de se conformer à ces instructions peut entraîner de graves blessures au conducteur ou à une personne à proximité.

- Arrêter la prise de force et le moteur avant de réparer le tracteur ou de changer des équipements.
- Ne pas utiliser avec une prise de force non protégé.

501330D1 1

10

REMARQUE

Utiliser uniquement les emplacements conseillés pour les connexions des câbles volants. Suivre la procédure dans le guide d'utilisation et d'entretien pour l'utilisation des câbles volants.

501371D1

11

DECAL SHEET-COMPLETING AR - 501515D1
FRENCH

ITEM	NUMBER	QTY	DESCRIPTION
-	179-2249	--	COMPLETING AR-FRENCH (NOT SERVICED)
-	501515D1	--	DECAL SHEET [A] (INCLS ITEMS 1-11)
1	501385D1	1	FILM-WARNING
2	501379D1	1	FILM-WARNING
3	501351D1	2	FILM-WARNING
4	501315D1	1	FILM-CAUTION (FRENCH)
5	501358D1	1	FILM-WIRE ACCESS (FRENCH)
6	501323D1	1	FILM-WARN UNIV. (FRENCH)
7	501391D1	1	FILM-SERVICE INFO (FRENCH)
8	501344D1	1	FILM-WARNING
9	501337D1	2	FILM-WARNING
10	501330D1	1	FILM-WARNING
11	501371D1	2	FILM-NOTICE

[A] PART OF 179-2249 COMPLETING AR

501515DA
PR: t05i29k58b0576

DECAL SHEET-COMPLETING AR - 501516D1
JAPANESE

サービスガイド

10時間毎、または、日常の点検
1．エンジン冷却液（クーラント）レベルの点検
2．エンジン・オイル・レベルの点検
3．燃料／水分離器トレイの点検
4．燃料レベルの点検
5．駆動走行部の検査
6．油圧および、トランスミッション・オイル・レベルの点検

50時間毎の点検
7．エア・タンクの水抜き（装備されている場合）
8．3ポイント・ヒッチへの給脂（装備されている場合）

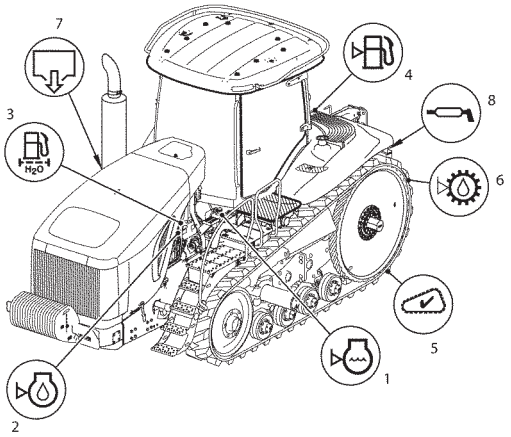

キャブ	部品番号	容量（標準）
循環エア・フィルタ	501153D1	
外気エア・フィルタ	501881D1	
A/C システム	R134A	23 hg (5,0 lb)
エンジン		
エンジン・オイル・フィルタ	504594D1	
一次燃料フィルタ	CH1R-0771	
二次燃料フィルタ	CH1R-0762	
エンジン・エア・フィルタ（一次）		
MT835/MT845	CH6I-2505	
MT855/MT865	CH6I-2509	
エンジン・エア・フィルタ（二次）		
MT835/MT845	CH6I-2506	
MT855/MT865	CH6I-2510	
オイル*（DEO SAE 10W30）		
MT835/MT845		30 L (8 gal)
MT855/MT865		34 L (9 gal)
冷却液（冷却水エクステンダ 50/50 混合）		
MT835/MT845		44 L (12 gal)
MT855/MT865		48 L (13 gal)
油圧／トランスミッション		
ステアリング・フィルタ	501766D2	
トランスミッション・フィルタ	501766D2	
油圧装置オイル・フィルタ	501771D1	
オイル（MTO SAE 10W30）		267 L (70,5 gal)
ベルト		
付属品	500685D1	
ファン		
MT835/MT845	197-6290	
MT855	197-6291	
MT865	197-6292	
バッテリ	502445D1	1000 CCA/（バッテリー当たり）
潤滑油		
ヒッチ（グリース：NLGI ／グレード：2-MPGM（3%MoS2））		1 hg (25,4 oz)

* 取扱説明書のエンジン・オイル粘度別温度表を参照してください。

Japanese 501395D1 3

7

⚠ 警告

ジャンパーケーブルを誤って接続すると、バッテリーが爆発し重大な事故につながるおそれがります。

取扱説明書のジャンパーケーブル接続方法に従い、必ずジャンパーケーブル接続部にケーブルを接続してください。

501389D1 1

1

⚠ 警告

下記の指示に従わない場合は、作業員および周囲の人に人身事故や死亡事故を招くおそれがあります.

- けん引する時は、必ずけん引バーを使用して下さい. 他部位を使ってけん引すると横転を引き起こすことがあります.
- けん引する場合は、安全チェーンを使用して下さい.

501380D1 1

2

⚠ 警告

電磁波から出る放射性物質は目に障害を及ぼすことがあります. 眼を守るためグランドスピードセンサーの正面を直視しないで下さい.

501352D1 1

3

⚠ 警告

取扱説明書の内容や警告ラベルの記載事項を読まなかったり、理解せずに運転操作をしないでください。取り扱い方法や警告文を無視すると、重大な人身事故、または、死亡事故を引き起こすおそれがあります。交換方法の手引きについては、キャタピラー社特約販売店にお問い合わせください。正しく取り扱うことは、ユーザー自身の義務です。

注 記

エンジンをフル稼働させたあとエンジンを停止させる場合は、ローアイドルで5分間の冷却運転（アイドリング）を行ってください。6.4 km/h 未満の速度で、全出力の 負荷をドローバーに掛け続けると、過重負荷によりパワートレーンの寿命を縮める原因と なり、この場合の故障保証については対象外 となります。
取扱説明書を参照してください。

Japanese 501324D1 1

6

⚠ 注意

補助席は
教育実習中の
オペレータまたは
マシンの診断作業を
実施する担当者が
使用するために
設けられたものです.
トラクタおよびマシン
には同乗者を
搭乗させないで下さい.
シートベルトは常に
着用してください.

501320D1 1

4

ワイヤアクセス

501359D1 1

5

⚠ 警告

作業装置の取り付けが不適切であると、人身傷害発生の原因となることがあります. 作業装置を搬送したり牽引する際は、ラッチを両側からしっかりと固定して下さい.

501348D1 1

8

⚠ 警告

傷害事故を防ぐためリフトコントロールを作動中は作業装置と車体の間に立たないで下さい。

501338D1 1

9

⚠ 警告

手順を順守しないと、オペレータまたは第3者に重大な傷害が発生することがあります.

- トラクタを整備する前にPTOとエンジンを停止し、作業装置を交換してして下さい.
- シールドを外したPTOを稼動しないで下さい.

501331D1 1

10

注 意

ジャンパーケーブルを接続する場合は、取扱説明書のジャンパーケーブルの接続方法に従い、決められた位置にケーブルを接続するようにしてください。

501375D1

11

DECAL SHEET-COMPLETING AR - 501516D1

JAPANESE

ITEM	NUMBER	QTY	DESCRIPTION
-	179-2254	--	COMPLETING AR-JAPANESE (NOT SERVICED)
-	501516D1	--	DECAL SHEET [A] (INCLS ITEMS 1-11)
1	501389D1	1	FILM-WARNING
2	501380D1	1	FILM-WARNING
3	501352D1	2	FILM-WARNING
4	501320D1	1	FILM-CAUTION (JAPANESE)
5	501359D1	1	FILM-WIRE ACCESS (JAPANESE)
6	501324D1	1	FILM-WARNING UNIV. (JAPANESE)
7	501395D1	1	FILM-SERVICE INFO (JAPANESE)
8	501348D1	1	FILM-WARNING
9	501338D1	2	FILM-WARNING
10	501331D1	1	FILM-WARNING
11	501375D1	2	FILM-NOTICE

[A] PART OF 179-2254 COMPLETING AR

501516DA
PR: t05i29k58b0577

DECAL SHEET-COMPLETING AR - 501517D1
PORTUGUESE

GUIDE D'ENTRETIEN

CONTRÔLES TOUTES LES 10 HEURES/TOUS LES JOURS

1. Contrôler le niveau de liquide de refroidissement moteur
2. Contrôler le niveau d'huile moteur
3. Contrôler la cuve du séparateur d'eau/carburant
4. Contrôler le niveau de carburant
5. inspecter le train de roulment
6. Contrôler le niveau de liquide hydraulique/boîte de vitesses

TOUTES LES 50 HEURES

7. Vidanger le réservoir d'air (selon équipement)
8. Graisser le relevage à trois points (selon équipement)

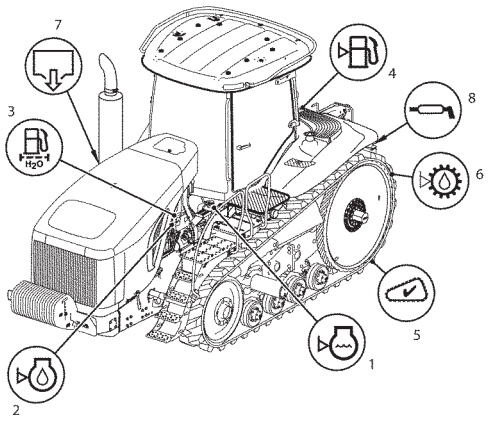

CABINE	NO PIÈCE	CONTENANCE APPROX.
FILTRE DE RECIRCULATION D'AIR	501153D1	
FILTRE À AIR FRAIS	501881D1	
CLIMATISATION	R134a	23 hg (5,0 lb)
MOTEUR		
FILTRE À HUILE MOTEUR	504594D1	
FILTRE À CARBURANT PRIMAIRE	CH1R-0771	
FILTRE À CARBURANT SECONDAIRE	CH1R-0762	
FILTRE À AIR (PRIMAIRE) DU MOTEUR		
MT835/ MT845	CH6I-2505	
MT855/ MT865	CH6I-2509	
FILTRE À AIR (SECONDAIRE) DU MOTEUR		
MT835/ MT845	CH6I-2506	
MT855/ MT865	CH6I-2510	
HUILE* (DEO SAE 10W30)		
MT835/ MT845		30 L (8 gal)
MT855/ MT865		34 L (9 gal)
LIQUIDE DE REFROIDISSEMENT (LONGUE DURÉE MÉLANGE 50/50)		
MT835/ MT845		44 L (12 gal)
MT855/ MT865		48 L (13 gal)
HYDRAULIQUE/BOÎTE DE VITESSES		
FILTRE DE DIRECTION/ÉQUIPEMENT	501766D2	
FILTRE DE BOÎTE DE VITESSES	501766D2	
FILTRE DE RETOUR (ÉQUIPEMENT)	501771D1	
HUILE (MTO SAE 10W30)		267 L (70,5 gal)
COURROIES		
ACCESSOIRES	500685D1	
VENTILATEUR		
MT835/ MT845	197-6290	
MT855	197-6291	
MT865	197-6292	
BATTERIES	502445D1	1000 CCA/ BATTERIE
GRAISSAGE		
RELEVAGE À TROIS POINTS [Graisse NLGI No 2-MPGM (3%MoS2)]		1 hg (25,4 oz)

*Voir la plage de température dans le guide d'utilisation et d'entretien

French 501391D1 3

7

DANGER

Des connexions de câbles volants incorrectes peuvent causer une explosion entraînant des blessures.

Utiliser uniquement les emplacements conseillés pour brancher les câbles volants. Suivre la procédure dans le guide d'utilisation et d'entretien.

501385D1 1

1

DANGER

L'inobservation de se conformer à ces consignes peut entraîner des blessures au conducteur ou aux personnes à proximité.

- Tirer uniquement à partir de la barre d'attelage. Il y a risque de renversement si l'on tire à partir d'un autre point.
- Utiliser des chaînes de sécurité pour remorquer l'équipement.

501379D1 1

2

DANGER

Les rayons émis par les microondes peuvent provoquer des lésions aux yeux. Pour éviter ce risque, ne regardez pas le capteur de vitesse directement en face.

501351D1 1

3

DANGER

Ne pas conduire cette machine et ne pas travailler dessus sans avoir lu et bien assimilé les instructions et les consignes donnés dans le manuel d'utilisation et d'entretien. Toute entorse est dangereuse et risque d'être à l'origine d'accidents graves, voire mortels. Si le manuel est à remplacer, s'adresser au concessionnaire caterpillar pour en obtenir un autre. Il incombe à l'utilisateur de prendre soin de cette machine.

REMARQUE

Faire fonctionner le moteur au régime de ralenti pendant cinq minutes avant de couper le moteur après tout fonctionnement à pleine charge.
Une utilisation invensive de cette machine avec un effort à la barre maximum en 5e ou dans un rapport inférieur (vitesse inférieure à 6,4 km/h) peut réduire la durée de service de la transmission. Se référer au guide d'utilisation.

French 501323D1 1

6

ATTENTION

Le siège du formateur est fourni uniquement pour les conducteurs en formation et pour les diagnostiques de machine. Les conducteurs doivent rester à l'écart du tracteur et de l'équipement. Toujours boucler la ceinture de sécurité.

501316D1 1

4

ACCÈS AUX CÂBLES

501358D1 1

5

DANGER

Des équipements incorrectement accouplés risquent de provoquer des accidents corporels. assurez-vous que les verrous sont complètement engagés des deux côtés avant de transporter ou de tirer l'équipement.

501344D1 1

8

DANGER

Afin d'éviter toute blessure, ne pas monter sur l'equipement ou rester entre l'équipment et le tracteur lorsque l'on utilise la commande de levage.

501337D1 1

9

DANGER

L'inobservation de se conformer à ces instructions peut entraîner de graves blessures au conducteur ou à une personne à proximité.

- Arrêter la prise de force et le moteur avant de réparer le tracteur ou de changer des équipements.
- Ne pas utiliser avec une prise de force non protégée.

501330D1 1

10

REMARQUE

Utiliser uniquement les emplacements conseillés pour les connexions des câbles volants. Suivre la procédure dans le guide d'utilisation et d'entretien pour l'utilisation des câbles volants.

501371D1

11

DECAL SHEET-COMPLETING AR - 501517D1

PORTUGUESE

ITEM	NUMBER	QTY	DESCRIPTION
-	179-2251	--	COMPLETING AR-PORTUGUESE (NOT SERVICED)
-	501517D1	--	DECAL SHEET [A] (INCLS ITEMS 1-11)
1	501387D1	1	FILM-WARNING
2	501381D1	1	FILM-WARNING
3	501353D1	2	FILM-WARNING
4	501317D1	1	FILM-CAUTION (PORTUGUESE)
5	501360D1	1	FILM-WIRE ACCESS (PORTUGUESE)
6	501325D1	1	FILM-WARNING UNIV. (PORTUGUESE)
7	501393D1	1	FILM-SERVICE INFO (PORTUGUESE)
8	501345D1	1	FILM-WARNING
9	501339D1	2	FILM-WARNING
10	501332D1	1	FILM-WARNING
11	501373D1	2	FILM-NOTICE

[A] PART OF 179-2251 COMPLETING AR

501517DA
PR: t05i29k58b0578

DECAL SHEET-COMPLETING AR - 501518D1
RUSSIAN

РУКОВОДСТВО ПО ТЕХНИЧЕСКОМУ ОБСЛУЖИВАНИЮ

КАЖДЫЕ 10 МОТОЧАСОВ ИЛИ ЕЖЕДНЕВНО
1. ПРОВЕРКА УРОВНЯ ОХЛАЖДАЮЩЕЙ ЖИДКОСТИ ДВИГАТЕЛЯ
2. ПРОВЕРКА УРОВНЯ МОТОРНОГО МАСЛА
3. ПРОВЕРКА СТАКАНА ТОПЛИВНОГО ВОДООТДЕЛИТЕЛЯ
4. ПРОВЕРКА УРОВНЯ ТОПЛИВА
5. ОСМОТР ХОДОВОЙ ЧАСТИ
6. ПРОВЕРКА УРОВНЯ РАБОЧЕЙ ЖИДКОСТИ В ГИДРОСИСТЕМЕ И КОРОБКЕ ПЕРЕДАЧ

КАЖДЫЕ 50 МОТОЧАСОВ
7. СЛИВ КОНДЕНСАТА ИЗ ВОЗДУШНОГО РЕСИВЕРА (ПРИ НАЛИЧИИ)
8. СМАЗКА ТРЕХ-ТОЧЕЧНОГО НАВЕСНОГО УСТРОЙСТВА (ПРИ НАЛИЧИИ)

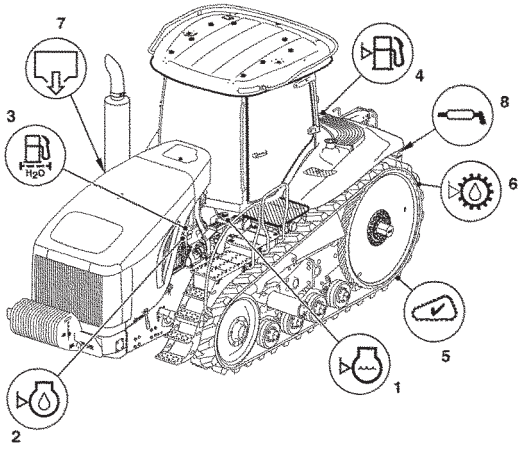

⚠ ОСТОРОЖНО

НЕВЕРНОЕ ПОДСОЕДИНЕНИЕ ПУСКОВЫХ КАБЕЛЕЙ МОЖЕТ СТАТЬ ПРИЧИНОЙ ВЗРЫВА И НЕСЧАСТНОГО СЛУЧАЯ.

ОСУЩЕСТВЛЯЙТЕ СОЕДИНЕНИЯ ПУСКОВЫХ КАБЕЛЕЙ ТОЛЬКО В РЕКОМЕНДОВАННЫХ ДЛЯ ЭТОГО ТОЧКАХ. СЛЕДУЙТЕ УКАЗАНИЯМ РУКОВОДСТВА ПО ЭКСПЛУАТАЦИИ И ТЕХНИЧЕСКОМУ ОБСЛУЖИВАНИЮ.

501390D1 1

1

⚠ ОСТОРОЖНО

НЕСОБЛЮДЕНИЕ ДАННЫХ УКАЗАНИЙ МОЖЕТ ПРИВЕСТИ К ТРАВМЕ ОПЕРАТОРА ИЛИ НАХОДЯЩИХСЯ ПОБЛИЗОСТИ ЛЮДЕЙ.

- КРЕПЛЕНИЕ ПРИЦЕПНОГО ОБОРУДОВАНИЯ ДОПУСКАЕТСЯ ТОЛЬКО К СЦЕПНОМУ УСТРОЙСТВУ ТЯГОВОГО БРУСА. БУКСИРОВКА С КРЕПЛЕНИЕМ В ЛЮБОЙ ДРУГОЙ ТОЧКЕ МОЖЕТ СТАТЬ ПРИЧИНОЙ ОПРОКИДЫВАНИЯ.
- ПРИ БУКСИРОВКЕ ПРИЦЕПНОГО ОБОРУДОВАНИЯ ПОЛЬЗУЙТЕСЬ ПРЕДОХРАНИТЕЛЬНЫМИ ЦЕПЯМИ.

501382D1 1

2

⚠ ОСТОРОЖНО

МИКРОВОЛНОВОЕ ИЗЛУЧЕНИЕ МОЖЕТ ПОВРЕДИТЬ ОРГАНЫ ЗРЕНИЯ. ВО ИЗБЕЖАНИЕ НЕСЧАСТНОГО СЛУЧАЯ НЕ СМОТРИТЕ ПРЯМО В ПЕРЕДНЮЮ ЧАСТЬ ДАТЧИКА СКОРОСТИ.

501354D1 1

3

⚠ ПРЕДУПРЕЖДЕНИЕ

СИДЕНЬЕ ИНСТРУКТОРА ПРЕДНАЗНАЧЕНО ДЛЯ ИСПОЛЬЗОВАНИЯ ТОЛЬКО В ЦЕЛЯХ ОБУЧЕНИЯ ОПЕРАТОРОВ И ДИАГНОСТИКИ НЕИСПРАВНОСТЕЙ. ПЕРЕВОЗКА ПАССАЖИРОВ НА ТРАКТОРЕ И ОБОРУДОВАНИИ ЗАПРЕЩЕНА. ВСЕГДА ПРИСТЕГИВАЙТЕСЬ РЕМНЕМ БЕЗОПАСНОСТИ.

501318D1 1

4

5

КАБИНА	№ ДЕТАЛИ ПО КАТАЛОГУ	ПРИМЕРНАЯ ВМЕСТИМОСТЬ
РЕЦИРКУЛЯЦИОННЫЙ ВОЗДУШНЫЙ ФИЛЬТР	501153D1	
ФИЛЬТР СВЕЖЕГО ВОЗДУХА	501881D1	
СИСТЕМА КОНДИЦИОНИРОВАНИЯ ВОЗДУХА	R134a	23 кг (5,0 фунтов)
ДВИГАТЕЛЬ		
МАСЛЯНЫЙ ФИЛЬТР ДВИГАТЕЛЯ	504594D1	
ТОПЛИВНЫЙ ФИЛЬТР ГРУБОЙ ОЧИСТКИ	CH11R-0771	
ТОПЛИВНЫЙ ФИЛЬТР ТОНКОЙ ОЧИСТКИ	CH11R-0762	
ОСНОВНОЙ ВОЗДУШНЫЙ ФИЛЬТР ДВИГАТЕЛЯ		
MT835/ MT845	CH6I-2505	
MT855/ MT865	CH6I-2509	
ВСПОМОГАТЕЛЬНЫЙ ВОЗДУШНЫЙ ФИЛЬТР ДВИГАТЕЛЯ		
MT835/ MT845	CH6I-2506	
MT855/ MT865	CH6I-2510	
МАСЛО* (DEO SAE 10W30)		
MT835/ MT845		30 л (8 галлонов)
MT855/ MT865		34 л (9 галлонов)
ОХЛАЖДАЮЩАЯ ЖИДКОСТЬ FELC*C УВЕЛИЧЕННЫМ СРОКОМ СЛУЖБЫ, ГОТОВАЯ К ПРИМЕНЕНИЮ СМЕСЬ 50/50		
MT835/ MT845		44 л (12 галлонов)
MT855/ MT865		48 л (13 галлонов)
ГИДРОСИСТЕМА И КОРОБКА ПЕРЕДАЧ		
ФИЛЬТР КОНТУРА РАБОЧЕГО ОБОРУДОВАНИЯ И РУЛЕВОГО УПРАВЛЕНИЯ	501766D2	
ФИЛЬТР КОРОБКИ ПЕРЕДАЧ	501766D2	
ФИЛЬТР ПРИМЕСЕЙ КАРТЕРА СИСТЕМЫ РАБОЧЕГО ОБОРУДОВАНИЯ	501771D1	
МАСЛО* (MTO SAE 10W30)		267 л (70,5 галлона)
РЕМНИ		
ВСПОМОГАТЕЛЬНОГО ОБОРУДОВАНИЯ	500685D1	
ВЕНТИЛЯТОРА		
MT835/ MT845	197-6290	
MT855	197-6291	
MT865	197-6292	
АККУМУЛЯТОРНЫЕ БАТАРЕИ	502445D1	1000 А ПУСКОВОЙ МОЩНОСТИ КАЖДАЯ
СМАЗКА		
ПРИЦЕПНОЕ УСТРОЙСТВО (КОНСИСТЕНТНАЯ СМАЗКА MPGM [3%MoS_2] COP7A NGL1 2)		100 г (25,4 унции)

* СМ. РЕКОМЕНДАЦИИ ПО ВЫБОРУ ВЯЗКОСТИ МАСЛА ДЛЯ КОНКРЕТНЫХ ТЕМПЕРАТУРНЫХ УСЛОВИЙ В РУКОВОДСТВЕ ПО ЭКСПЛУАТАЦИИ И ТЕХНИЧЕСКОМУ ОБСЛУЖИВАНИЮ.

Rusaian 501396D1 3

7

⚠ ОСТОРОЖНО

ЗАПРЕЩАЕТСЯ ПРОВОДИТЬ ЭКСПЛУАТАЦИЮ ИЛИ ТЕХНИЧЕСКОЕ ОБСЛУЖИВАНИЕ ДАННОЙ МАШИНЫ, НЕ ПРОЧИТАВ И НЕ УСВОИВ УКАЗАНИЙ И ПРЕДУПРЕЖДЕНИЙ, СОДЕРЖАЩИХСЯ В РУКОВОДСТВЕ ПО ЭКСПЛУАТАЦИИ И ТЕХНИЧЕСКОМУ ОБСЛУЖИВАНИЮ. НЕСОБЛЮДЕНИЕ УКАЗАНИЙ ИЛИ ПРЕНЕБРЕЖЕНИЕ ПРЕДУПРЕЖДЕНИЯМИ МОЖЕТ СТАТЬ ПРИЧИНОЙ НЕСЧАСТНОГО СЛУЧАЯ, В ТОМ ЧИСЛЕ И СО СМЕРТЕЛЬНЫМ ИСХОДОМ. ЗА ДОПОЛНИТЕЛЬНЫМИ ЭКЗЕМПЛЯРАМИ РУКОВОДСТВ ОБРАЩАЙТЕСЬ К ЛЮБОМУ УПОЛНОМОЧЕННОМУ ДИЛЕРУ. ЗАБОТА О БЕЗОПАСНОСТИ - ВАША ОБЯЗАННОСТЬ.

ВНИМАНИЕ

ПЕРЕД ОСТАНОВОМ ДВИГАТЕЛЯ ПОСЛЕ РАБОТЫ С ПОЛНОЙ НАГРУЗКОЙ ДАЙТЕ ДВИГАТЕЛЮ ПОРАБОТАТЬ В РЕЖИМЕ ХОЛОСТОГО ХОДА В ТЕЧЕНИЕ ПЯТИ МИНУТ.

ДЛИТЕЛЬНАЯ ЭКСПЛУАТАЦИЯ МАШИНЫ С ПОЛНОЙ НАГРУЗКОЙ НА ТЯГОВОМ БРУСЕ СО СКОРОСТЬЮ ХОДА НИЖЕ 6,4 км/ч ВЫЗЫВАЕТ УСКОРЕННЫЙ ИЗНОС СИЛОВОЙ ПЕРЕДАЧИ И МОЖЕТ ПРИВЕСТИ К ПОТЕРЕ ПРАВ НА ГАРАНТИЙНОЕ ОБСЛУЖИВАНИЕ ВВИДУ ЭКСПЛУАТАЦИИ С ПЕРЕГРУЗКОЙ. СМ. РУКОВОДСТВО ОПЕРАТОРА.

Russian 501328D1 1

6

⚠ ОСТОРОЖНО

ВО ИЗБЕЖАНИЕ ТРАВМ ПРИ ВКЛЮЧЕНИИ ПОДЪЕМНОГО УСТРОЙСТВА ЗАПРЕЩАЕТСЯ СТОЯТЬ НА РАБОЧЕМ ОБОРУДОВАНИИ ИЛИ НАХОДИТЬСЯ МЕЖДУ ТРАКТОРОМ И ОБОРУДОВАНИЕМ.

501340D1 1

9

⚠ ОСТОРОЖНО

ИРИ НЕПРАВИЛЬНОЙ СЦЕПКЕ РАБОЧЕГО ОБОРУДОВАНИЯ МОЖЕТ ПРОИЗОЙТИ НЕСЧАСТНЫЙ СЛУЧАЙ. ПЕРЕД ТРАНСПОРТИРОВКОЙ ИЛИ БУКСИРОВКОЙ РАБОЧЕГО ОБОРУДОВАНИЯ ФИКСАТОРЫ ДОЛЖНЫ БЫТЬ ПОЛНОСТЬЮ ВСТАВЛЕНЫ С ДВУХСТОРОН.

501346D1 1

8

⚠ ОСТОРОЖНО

НЕСОБЛЮДЕНИЕ УКАЗАНИЙ МОЖЕТ ПРИВЕСТИ К ТЯЖЕЛОЙ ТРАВМЕ ОПЕРАТОРА ИЛИ НАХОДЯЩЕГОСЯ РЯДОМ ПЕРСОНАЛА

- ПЕРЕД ПРОВЕДЕНИЕМ ТЕХНИЧЕСКОГО ОБСЛУЖИВАНИЯ ТРАКТОРА ИЛИ СМЕНОЙ РАБОЧЕГО ОБОРУДОВАНИЯ ОСТАНОВИТЕ МЕХАНИЗМ ОТБОРА МОЩНОСТИ И ЗАГЛУШИТЕ ДВИГАТЕЛЬ.
- ЗАПРЕЩАЕТСЯ РАБОТА СО СНЯТЫМ ОГРАЖДЕНИЕМ ВАЛА МЕХАНИЗМА ОТБОРА МОЩНОСТИ.

501333D1 1

10

ВНИМАНИЕ

ПОДКЛЮЧЕНИЕ ПУСКОВЫХ СОЕДИНИТЕЛЬНЫХ КАБЕЛЕЙ ОСУЩЕСТВЛЯЙТЕ ТОЛЬКО В РЕКОМЕНДОВАННЫХ ДЛЯ ЭТОГО ТОЧКАХ. СЛЕДУЙТЕ УКАЗАНИЯМ ПО ПРИМЕНЕНИЮ ПУСКОВЫХ СОЕДИНИТЕЛЬНЫХ КАБЕЛЕЙ (СМ. РУКОВОДСТВО ПО ЭКСПЛУАТАЦИИ И ТЕХНИЧЕСКОМУ ОБСЛУЖИВАНИЮ.)

501376D1 1

11

DECAL SHEET-COMPLETING AR - 501518D1

RUSSIAN

ITEM	NUMBER	QTY	DESCRIPTION
-	179-2255	--	COMPLETING AR-PORTUGUESE (NOT SERVICED)
-	501518D1	--	DECAL SHEET [A] (INCLS ITEMS 1-11)
1	501390D1	1	FILM-WARNING
2	501382D1	1	FILM-WARNING
3	501354D1	2	FILM-WARNING
4	501318D1	1	FILM-CAUTION (RUSSIAN)
5	501361D1	1	FILM-WIRE ACCESS (RUSSIAN)
6	501326D1	1	FILM-WARNING UNIV. (RUSSIAN)
7	501396D1	1	FILM-SERVICE INFO (RUSSIAN)
8	501346D1	1	FILM-WARNING
9	501340D1	2	FILM-WARNING
10	501333D1	1	FILM-WARNING
11	501376D1	2	FILM-NOTICE

[A] PART OF 179-2255 COMPLETING AR

501518DA
PR: t05i29k58b0579

DECAL SHEET-COMPLETING AR - 501519D1
SPANISH

GUÍA DE SERVICIO

COMPROBACIONES DIARIAS / 10 HORAS
1. Comprobar nivel de refrigerante del motor
2. Comprobar nivel del aceite del motor
3. Comprobar recipiente de separador de combustible/agua
4. Comprobar nivel del combustible
5. Inspeccionar tren de rodaje
6. Comprobar nivel del fluido hidráulico/ de la transmisió

50 HORAS
7. Drenar tanque de aire (si tiene)
8. Lubricar enganche de 3 puntos (si tiene)

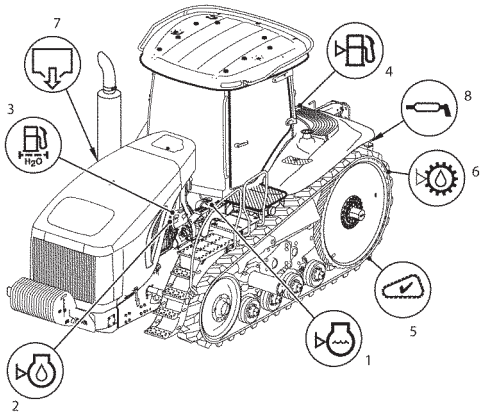

⚠ ADVERTENCIA

La conexi—n inapropiada de los cables auxiliares de arranque puede causar una explosi—n resultando en lesiones.

Use só lo las ubicaciones recomendadas para conectar los cables auxiliares de arranque. Siga el procedimiento indicado en el manual de operacion y mantenimiento.

501386D1 1

1

⚠ ADVERTENCIA

De no seguir estas instrucciones, se pueden ocasionar lesiones al operador o a otras personas que esten presentes.

- Tire solo mediante la barra de tiro. Si se tira desde cualquier otro punto, la maquina puede volcarse.
- Use cadenas de seguridad para remolcar el equipo.

501383D1 1

2

⚠ ADVERTENCIA

La radiacion de microonda puede da ñ ar los ojos. Para evitar lesiones de los ojos, no mire directamente a la faz irradiante del sensor de velocidad de desplazamiento.

501355D1 1

3

CABINA	NO. DE PIEZA	CAPACIDAD APROX.
FILTRO DE AIRE DE RECIRCULACIÓN	501153D1	
FILTRO DE AIRE FRESCO	501881D1	
SISTEMA DE AIRE ACONDICIONADO	R134a	23 hg (5,0 lb)
MOTOR		
FILTRO DE ACEITE DEL MOTOR	504594D1	
FILTRO DE COMBUSTIBLE PRIMARIO	CH1R-0771	
FILTRO DE COMBUSTIBLE SECUNDARIO	CH1R-0762	
FILTRO DE AIRE DEL MOTOR (PRIMARIO)		
MT835/ MT845	CH6I-2505	
MT855/ MT865	CH6I-2509	
FILTRO DE AIRE DEL MOTOR (SECUNDARIO)		
MT835/ MT845	CH6I-2506	
MT855/ MT865	CH6I-2510	
ACEITE* (DEO SAE 10W30)		
MT835/ MT845		30 L (8 gal)
MT855/ MT865		34 L (9 gal)
REFRIGERANTE (DE LARGA DURACIÓN, MEZCLA 50/50)		
MT835/ MT845		44 L (12 gal)
MT855/ MT865		48 L (13 gal)
HIDRAULICA / TRANSMISIÓN		
FILTRO DE LA DIRECCIÓN DEL IMPLEMENTO	501766D2	
FILTRO DE LA TRANSMISIÓN	501766D2	
FILTRO DE DRENAJE DE LA CAJA DEL IMPLEMENTO	501771D1	
ACEITE (MTO SAE 10W30)		267 L (70,5 gal)
CORREAS		
ACCESORIO	500685D1	
VENTILADOR		
MT835/ MT845	197-6290	
MT855	197-6291	
MT865	197-6292	
BATERÍAS	502445D1	1000 CCA/ POR BATERÍA
LUBRICACIÓN		
ENGANCHE (GRASA NLGI GRADO 2-MPGM (3%MoS2))		1 hg (25,4 oz)

* Ver manual de operació y mantenimiento para obtener informació sobre la gama de aplicaciones y temperaturas

Spanish 501392D1 3

7

⚠ ADVERTENCIA

No haga funcionar ni trabaje en esta maquina a menos de haber leido y entendido las instrucciones y advertencias de los manuales de operacion y mantenimiento. De no seguir las instrucciones o de no hacer caso de las advertencias podrain resultar lesiones o accidentes fatales. Solicite a caulquier distribuidor caterpillar manuales de reemplazo. Cae bajo su responsabilidad tomar las precauiones debidas.

ATENCION

Despues de operar el motor con carga plena, hagalo funcionar a baja en vacio por cinco minutos antes de pararlo.
No opere esta maquina con una carga maxima en la barra de tiro en quinta velocidad o menos (a velocidades inferiores a 6,4 km/h) si la masa continua maxima en funcionamiento es superior a 14,061 kg, consulte el manual de operacion y mantenimiento.

Spanish 501327D1 1

6

⚠ ADVERTENCIA

El asiento de instruccion ha sido diseñado con el proposito de entrenar operadores y/o para diagnosticar problemas de la maquina. No permita pasajeros en el tractor ni en el equipo. Siempre use su cinturon de seguridad.

501316D1 1

4

5

⚠ ADVERTENCIA

Un implemento mal acoplado puede causar lesiones. Asegurese que los pestillos esten bien enganchados en ambos lados antes de transportar o halar el implemento.

501347D1 1

8

⚠ ADVERTENCIA

Para evitar lesiones graves no se pare sobre el implemento y el tractor ni entre los mismos mientras opera el control de levant-amiento.

501341D1 1

9

⚠ ADVERTENCIA

El operador o algun observador podria sufrir serias lesiones si no se siguen las siguientes instrucciones.

¥ Detenga la PTO y el motor antes de dar servicio al tractor o antes de cambiar accesorios.

¥ No opere la PTO sin protectores.

501334D1 1

10

ATENCIÓN

Use s—lo las ubicaciones recomendadas para las conexiones de cabels auxiliares de arranque. Siga el procedimiento indicado en el manual de operaci—n y mantenimiento en lo que respecta al uso de cables auxiliares de arranque .

501372D1

11

DECAL SHEET-COMPLETING AR - 501519D1

SPANISH

ITEM	NUMBER	QTY	DESCRIPTION
-	179-2250	--	COMPLETING AR-SPANISH (NOT SERVICED)
-	501519D1	--	DECAL SHEET [A] (INCLS ITEMS 1-11)
1	501386D1	1	FILM-WARNING
2	501383D1	1	FILM-WARNING
3	501355D1	2	FILM-WARNING
4	501316D1	1	FILM-CAUTION (SPANISH)
5	501362D1	1	FILM-WIRE ACCESS (SPANISH)
6	501327D1	1	FILM-WARNING UNIV (SPANISH)
7	501392D1	1	FILM-SERVICE INFO (SPANISH)
8	501347D1	1	FILM-WARNING
9	501341D1	2	FILM-WARNING
10	501334D1	1	FILM-WARNING
11	501372D1	2	FILM-NOTICE

[A] PART OF 179-2250 COMPLETING AR

501519DA
PR: t05i29k58b0580

PROTECTION GP-VANDALISM
185-8848

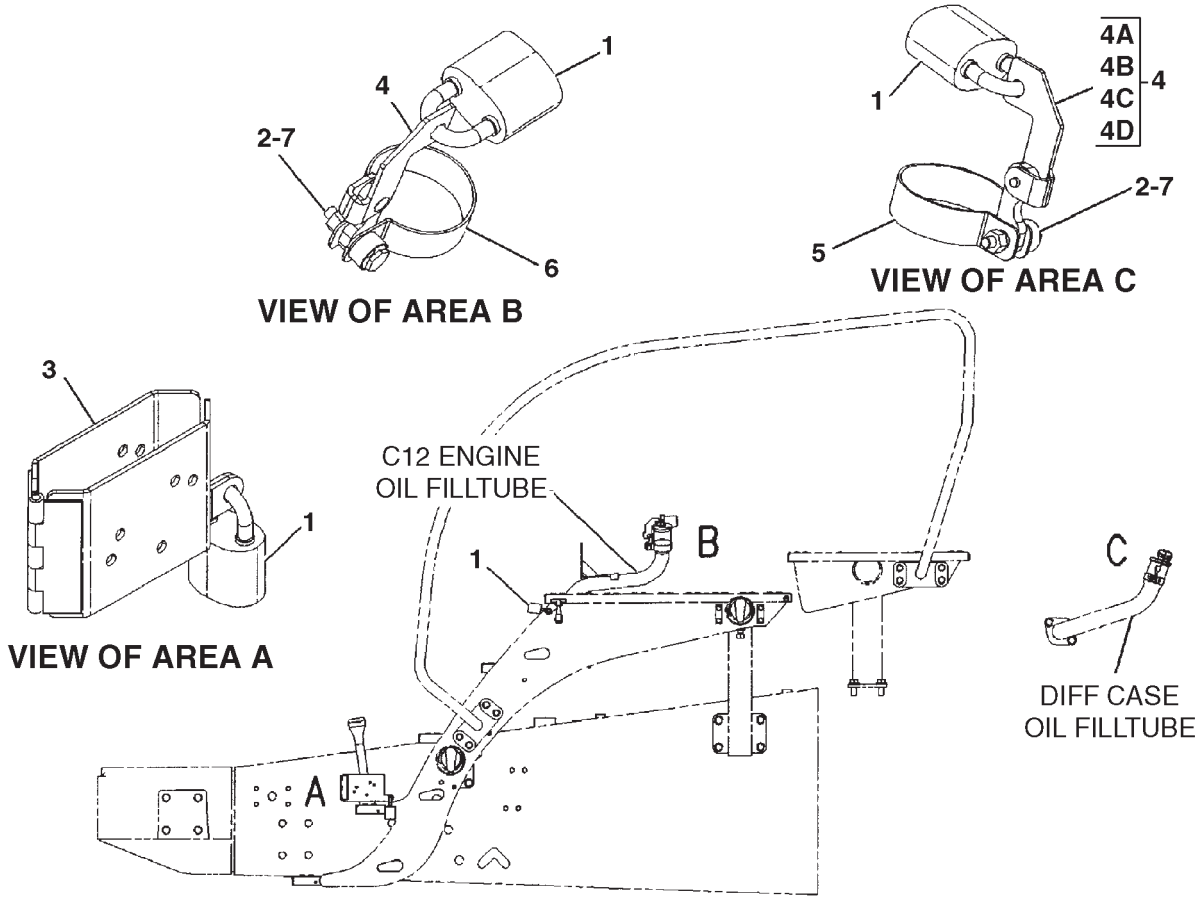

0891372A

PROTECTION GP-VANDALISM
185-8848

ITEM	NUMBER	QTY	DESCRIPTION
-	185-8848	--	PROTECTION GP-VANDALISM (NOT SERVICED)
1	CH5P-8502	4	PADLOCK (W/KEY)
	CH5P-8500	1	KEY
2	400135X1	2	BOLT-TAMPERPROOF (1/4-20X1 IN)
3	188-1155	1	COVER ASM (INCLUDES 2 PLATES AND HINGE)
4	191-8006	2	LOCK ASM (INCLS 4A-4D)
4A	CH2P-2717	1	HASP
4B	CH8D-9558	1	RIVET
4C	191-8007	1	LUG
4D	CH2A-3211	1	WASHER
5	CH191-8010	1	CLAMP
6	CH196-9321	1	CLAMP
7	CH3E-9865	2	LOCKNUT (1/4-20)
-	CH123-4950	3	SCREW-PAN HD (M16X1) (NOT SHOWN)

0891372A
PR: t05i29k58b0581

TOOL GP-AXLE GAUGE CHANGE - 203-9712

FACTORY OPTION

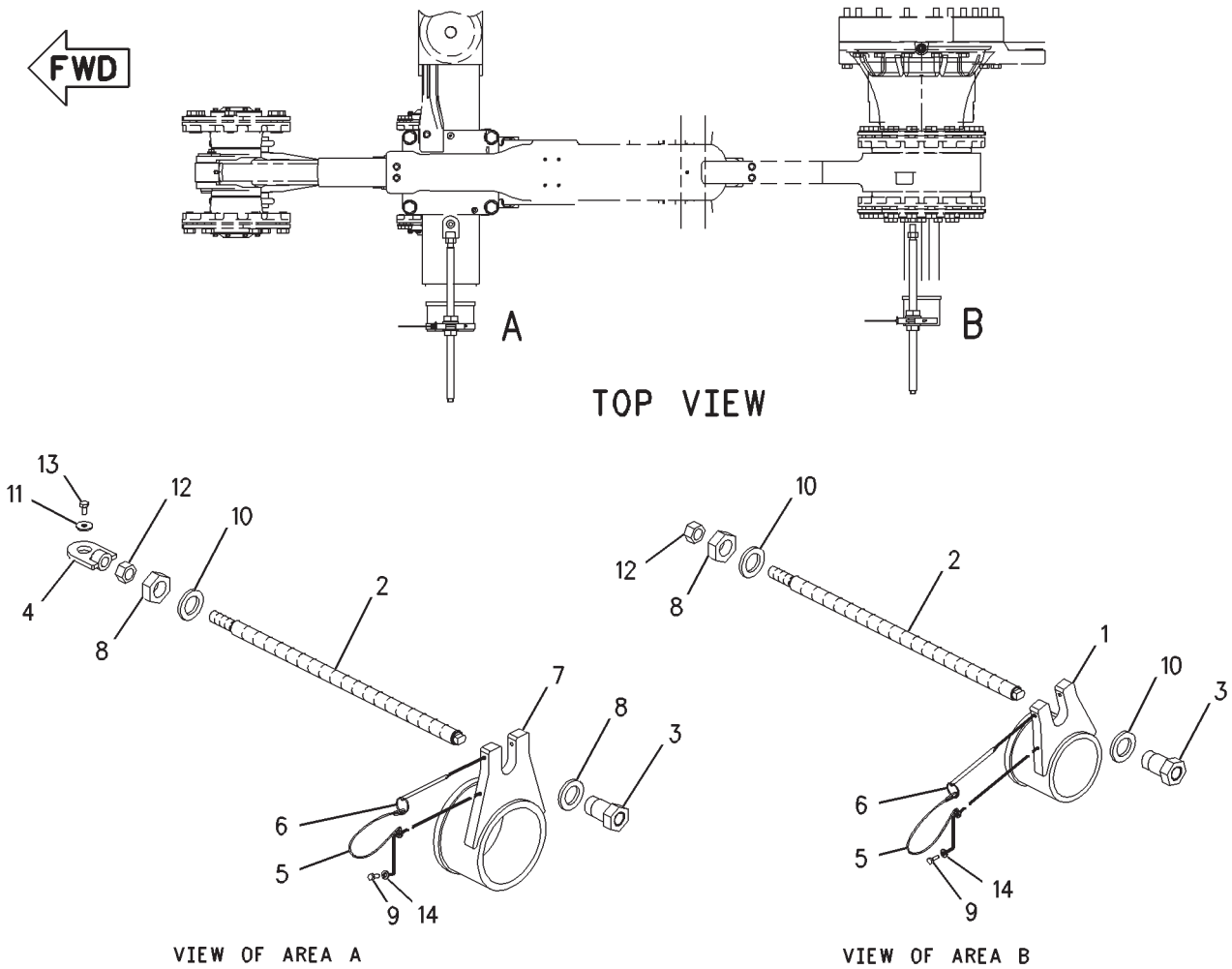

00816200

TOOL GP-AXLE GAUGE CHANGE - 203-9712

FACTORY OPTION

ITEM	NUMBER	QTY	DESCRIPTION
-	502763D1	--	KIT-AXLE GAUGE CHANGE TOOL (FIELD)
-	203-9712	--	TOOL GP-AXLE GAUGE CHANGE [A] (FACT OPT) (NOT SERVICED, ORDER FIELD KIT)
1	198-4474	1	BRACKET ASM
2	198-4475	2	ROD
3	400354X1	2	NUT-SPECIAL (1-1/4"-12)
4	198-4477	1	ADAPTER ASM
5	203-6604	2	LANYARD
6	203-7787	2	PIN
7	205-8790	1	BRACKET
8	400083X1	2	NUT-JAM (1-1/4"-12-2B LH)
9	400152X1	2	BOLT (M6X1X16MM)
10	CH7X-0533	4	WASHER-HARD (34X55X6)
11	CH8C-9987	1	WASHER (8.3X28X2.5)
12	400286X1	2	NUT (M20X2.5)
13	400227X1	1	BOLT (M8X1.25X16MM)
14	CH8T-4205	2	WASHER-HARD (7.2X14.5X2MM)

[A] PART OF 502763D1 KIT-AXLE GA CHANGE

00816200
PR: t05i29k58b0582

PAINT

NO ILLUSTRATION

PAINT

ITEM	NUMBER	QTY	DESCRIPTION
	4C-4200		YELLOW, AEROSOL
	4C-6129		YELLOW, 1 GALLON
	4C-6122		YELLOW, 5 GALLON
	4C-6127		YELLOW, 55 GALLON
	4C-4184		YELLOW, FAST DRY 1 GALLON
	4C-4192		YELLOW, FAST DRY 5 GALLON
	4C-4207		YELLOW, FAST DRY 55 GALLON
	9U-7725		YELLOW, WATER REDUCIBLE 1 GALLON
	4C-4198		BLACK, MED GLOSS AEROSOL
	4C-4183		BLACK, MED GLOSS 1 GALLON
	4C-4191		BLACK, MED GLOSS 5 GALLON
	4C-4206		BLACK, MED GLOSS 55 GALLON
	4C-4199		BLACK, MUFFLER AEROSOL
	4C-6134		URETHANE, YELLOW TOUCH-UP 1 GALLON
	4C-6126		URETHANE, YELLOW TOUCH-UP 5 GALLON
	4C-6133		URETHANE, BLACK TOUCH-UP 1 GALLON
	4C-5843		BLACK, GLOSS AEROSOL
	173-4060		GRAY, MACHINE DARK AEROSOL
	171-9773		GRAY, MACHINE DARK 1 GALLON
	171-9774		GRAY, MACHINE DARK 5 GALLON
	9U-7948		GRAY, DAWN GLOSS AEROSOL ORDER THRU CAT DEALER)
	4C-4205		PRIMER, YELLOW AEROSOL
	4C-4190		PRIMER, YELLOW 1 GALLON
	4C-4197		PRIMER, YELLOW 5 GALLON
	4C-4211		PRIMER, YELLOW 55 GALLON

PAINTGP1
PR: t05i29k58b0583

RECOMMENDED DEALER'S STOCK

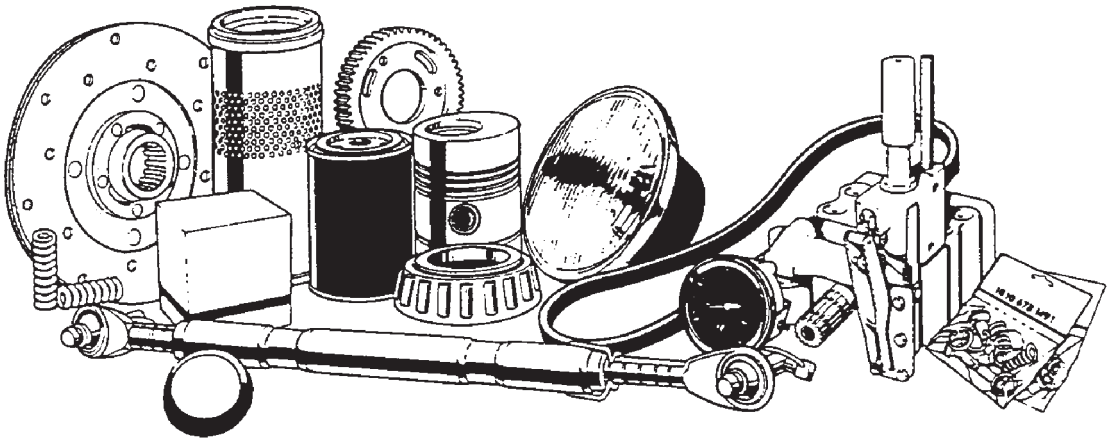

RECOMMENDED DEALER STOCK

ITEM	NUMBER	QTY	DESCRIPTION
	185-2151	1	BELT
	500685D1	1	BELT-ALT
	501178D1	1	BELT-FAN (MT835/MT845)
	197-6291	1	BELT-FAN (MT855)
	197-6292	1	BELT-FAN (MT865)
	501688D1	1	BLADE/ASY WIPE
	CH134-1935	1	BLADE/WIPER
	CH189-8610	1	BLADE-WIPER (RH WINDOW)
	CH9X-8118	1	BULB/12 V 55 W
	400862X1	1	BULB/885-12.8V
	500678D1	1	BULB/HALOGEN/8
	CH175-1323	1	BULB/HEADLAMP
	CH8I-4256	1	BULB/HEADLIGHT
	502183D1	1	CABLE/AS. - NE
	CH3S-5096	3	CLAMP/HOSE
	177-5249	4	DISC
	187-8947	1	DISC
	168-2313	1	FAN
	501153D1	2	FILTER/AIR
	501766D1	2	FILTER/ELEMENT
	501771D1	2	FILTER/ELEMENT
	136-5600	1	FUSE
	220-5736	1	FUSE
	CH113-8490	1	FUSE/MINI (10A)
	CH113-8491	1	FUSE/MINI (15A)
	CH113-8492	1	FUSE/MINI (20A)
	CH124-3548	1	FUSE/MINI (30A)
	CH141-2759	1	FUSE/MINI (5A)
	230-9563	1	HOSE
	201-2442	1	KEY
	CH5P-8500	1	KEY
	209-9680	1	KIT, SEAL
	189-3142	1	KIT/CASE DRAIN
	171-9687	1	LAMP
	171-9688	1	LAMP
	216-6980	1	ORIFICE
	131-3718	1	O-RING
	7M-8485	1	O-RING
	8F-3469	1	O-RING
	162-6738	1	PAD
	4N-0952	1	PLUG/SOFT
	221-1233	1	PULLEY
	154-8264	1	RETAINER
	177-6801	1	RING
	207-5993	1	SCREEN
	184-1695	1	SEAL
	186-2869	1	SHIM
	9X-1813	1	SLEEVE
	501026D1	1	SPRING/ AS. -
	169-8227	1	SWITCH
	171-1229	1	SWITCH
	500717D1	1	SWITCH/PUSH BU
	216-5343	1	VALVE

NOTE: THIS LIST REPRESENTS ITEMS
RECOMMENDED TO SERVICE 5 UNITS.

RDL
PR: t05i29k58b0584