	A1	

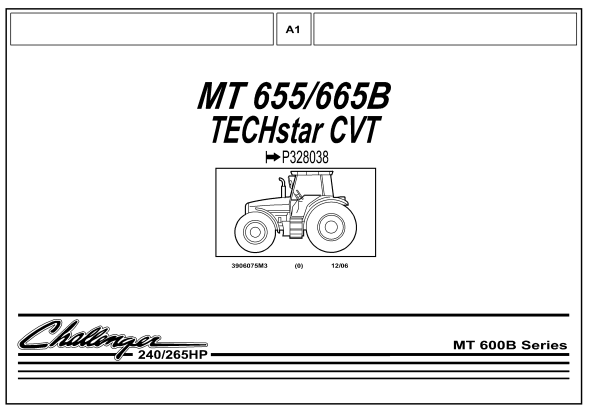

3906075M3 (0) 04/07

MASSEY FERGUSON

CONTENTS / SOMMAIRE / INHALT / CONTENUTO / SUMARIO	A2	

CONTENTS	SOMMAIRE	INHALT	CONTENUTO	SUMARIO
SECTION ONE	**SECTION UNE**	**ABSCHNITTEINS**	**SEZIONE PRIMA**	**SECCION PRIMERA**
- GENERAL INFORMATION	- INFORMATIONS GENERALES	- ALLGEMEINE HINWEISE	- INFORMAZIONI GENERALI	- INFORMATION GENERAL
- SYMBOLS	- SYMBOLES	- SYMBOLE	- SIMBOLI	- SIMBOLOS
- GROUP INDEX ALPHA.	- GROUPES DE MONTAGE	- GRUPPENVERZEICHNIS	- GRUPPO INDICE	- GROUPOS DE MONTAJE
- RECOMMENDED STOCKING PARTS	- PIECES DONT LE STOCKAGE EST RECOMMANDE	- LAGERVOSCHLAGSTEILE	- PEZZI CHE RECCOMANDIANO DI TENERE A MAGAZZINO	- RECAMBIO QUE SE RECOMIENDA MANTENER EN STOCK
- MARKETING KEY PARTS INDEX	- PIECES DE VENTES COURANTES	- SCHWERPUNKTEILE MARKETING	- PEZZI ESSENZIALI PER IL MARKETING	- RECAMBIO SELECCIONADO POR MARKETING COMO PIEZAS CLAVE
- CHANGES AFTER PREVIOUS PUBLICATION INDEX	- CHANGEMENT DEPUIS LA DERNIERE EDITION	- AENDERUNG GEGENEUBER VORIGER AUSGABE	- VARIAZIONE RISPETTO ALL ULTIMA EMISSIONE	- MOD. DESDE LA ULTIMA EDICION
- NUMERICAL PART NUMBER INDEX	- INDEX NUMERIQUE PIECES	- NUMMERN - INDEX	- INDICE NUMERICO	- INDICE NUMERICO
SECTION TWO	**SECTION DEUX**	**ABSCHNITT ZWEI**	**SEZIONE SECONDA**	**SECCION SEGUNDA**
- ILLUSTRATIONS WITH REFERENCES	- ILLUSTRATIONS AVEC REFERENCES	- ABBILDUNGEN MIT POSITIONS NUMMERN	- ILLUSTRAZIONI CON REFERIMENTI	- DJBUJOS CON REFERENCIAS
- PART NUMBER REFERENCE LISTS	- LISTES DES NUMEROS DE REFERENCE DES PIECES	- TEXTSEITEN MIT TEILNUMMERN	- ELENCO DEI PARTICOLARI RICAMBIO	- LISTAS CON LOS NUMEROS DE REFERENCIA

I PART NUMBER REFERENCE LIST

(1) EXAMPLE

A	B	C	D	E	F	G	H	J
							K	L
1		*1611168M4*	1		1	DIFFERENTIAL	DIFFERENTIEL DIFFERENZIALE	DIFFERENTIAL DIFFERENCIAL
2		*3619014M1*	2		1	KIT	JEU IL GRUPPO	REPARATURSATZ JUEGO
3			2	REF.2	1	CROWNWHEEL	COURONNE CORONA	TELLERRAD CORONA
4			2	REF.2	1	PINION	PIGNON PIGNONE	ZAHNRAD PINON
5	*	**3617401M5**	2	1234567	1	BOLT	BOULON BULLONE	SCHRAUBE PERNO
6	*	3617352M3	2	1234567	1	BOLT	BOULON BULLONE	SCHRAUBE PERNO

(2) EXPLANATION

COL. A ILLUSTRATION REFERENCE NUMBER

COL. B AN ASTERISK INDICATES A CHANGE SINCE LAST PRINT

COL. C PART NUMBER (SEE PARAGRAPH 2)

COL. D ITEM ALSO A COMPONENT OF AN ASSEMBLY. SEE ASSEMBLY ILLUSTRATION NUMBER INDICATED

COL. E COMMENT (SEE SYMBOLS AND NOTES)

COL. F QUANTITY REQUIRED (SEE NOTES BELOW)

COL. G.H.J.K.L DESCRIPTION LANGUAGE FORMAT : ENGLISH, FRENCH, GERMAN, ITALIAN, SPANISH

II PART NUMBER IDENTIFICATION

1611168M4 = RECOMMENDED STOCKING PARTS AND MARKETING KEY PARTS

3619014M1 = RECOMMENDED STOCKING PARTS

3617401M5 = MARKETING KEY PARTS INDEX

3617352M3 = PART WITHOUT SPECIFIC MARKS

(3) SPECIAL NOTES

THE QUANTITY SHOWN IN COLUMN 'F' IS THE QUANTITY REQUIRED FOR THE PARTICULAR APPLICATION THAT IS ILLUSTRATED. WHERE THESE PARTS ARE COMPONENTS OF AN ASSEMBLY THIS REFERS TO THE QUANTITY IN ONE ASSEMBLY OR SUB-ASSEMBLY.

FOR PARTS SUCH AS SHIMS, WASHERS, ETC. AN 'X' IN THE QUANTITY COLUMN MEANS "QUANTITY AS REQUIRED"

THE PARTS BOOK NUMBER, ISSUE NUMBER AND DATE ARE SHOWN IN THE LOWER RIGHT HAND CORNER OF THE ILLUSTRATED PAGE. THE ISSUE NUMBER IS PRINTED IN BRACKETS

RECOMMENDED STOCKING PARTS

THE INDEX OF THESE PARTS INCLUDES A COLUMN QTY REPORTING THE QUANTITY USED FOR EACH PART IN THE RELEVANT FITTING.

SAFETY NOTE

WHEN ORDERING REPLACEMENT PARTS TO WHICH SAFETY DECALS WERE ORIGINALLY ATTACHED THE APPROPRIATE SAFETY DECALS MUST BE ORDERED AND FITTED.

INFORMATIONS GENERALES

A4

I LISTES DES NUMEROS DE REFERENCE DES PIECES

(1) EXEMPLE

A	B	C	D	E	F	G	H	J
							K	L
1		*1611168M4*	1		1	DIFFERENTIAL	DIFFERENTIEL DIFFERENZIALE	DIFFERENTIAL DIFFERENCIAL
2		*3619014M1*	2		1	KIT	JEU IL GRUPPO	REPARATURSATZ JUEGO
3			2	REF.2	1	CROWNWHEEL	COURONNE CORONA	TELLERRAD CORONA
4			2	REF.2	1	PINION	PIGNON PIGNONE	ZAHNRAD PINON
5	*	**3617401M5**	2	1234567	1	BOLT	BOULON BULLONE	SCHRAUBE PERNO
6	*	3617352M3	2	1234567	1	BOLT	BOULON BULLONE	SCHRAUBE PERNO

(2) EXPLICATIONS

COL. A — NUMERO DE REFERENCE DE L'ILLUSTRATION

COL. B — UN ASTERISQUE INDIQUE UN CHANGEMENT DEPUIS LA DERNIERE EDITION

COL. C — NUMERO DE PIECE (VOIR PARAGRAPHE 2)

COL. D — PIECE COMPRISE DANS L'ENSEMBLE DONT LE NUMERO DE REFERENCE DE L'ILLUSTRATION EST INDIQUE

COL. E — REMARQUE (VOIR SYMBOLES ET NOTES)

COL. F — QUANTITE (VOIR NOTE CI-DESSOUS)

COL. G.H.J.K.L — DESIGNATION ORDRE DES LANGUES ANGLAIS, FRANCAIS, ALLEMAND, ITALIEN, ESPAGNOL

II IDENTIFICATION DES NUMEROS DE PIECES

1611168M4 = PIECES DONT LE STOCKAGE EST RECOMMANDE ET PIECES DE VENTES COURANTES

3619014M1 = PIECES DONT LE STOCKAGE EST RECOMMANDE

3617401M5 = PIECES DE VENTES COURANTES

3617352M3 = PIECES SANS SIGNIFICATION PARTICULIERE

(3) NOTES SPECIALES

LA QUANTITE INDIQUEE DANS LA COLONNE 'F' EST CELLE APPLICABLE A L'ENSEMBLE ILLUSTRE SUR LA PAGE ADJACENTE, LE NOMBRE INDIQUE DONC LA QUANTITE DANS L'ENSEMBLE OU SOUS-ENSEMBLE ET NON POUR LA MACHINE COMPLETE.

POUR DES PIECES TELLES QUE CALES D'EPAISSEUR, RONDELLES, ETC. UN "X" DANS LA COLONNE QUANTITE SIGNIFIE "SUIVANT BESOIN".

LE NUMERO DU CATALOGUE, LE NUMERO D'EMISSION ET LA DATE SONT INDIQUES DANS LE COIN INFERIEUR DROIT DE LA PAGE ILLUSTREE. LE NUMERO D'EMISSION EST IMPRIME ENTRE PARENTHESES.

PIECES DONT LE STOCKAGE EST RECOMMANDE

L'INDEX DE CES PIECES INCLUS UNE COLONNE QTY QUI LISTE LA QUANTITE UTILISEE DE CHAQUE PIECE POUR LE MONTAGE.

NOTE DE SECURITE

LORS DU REMPLACEMENT DE PIECES MUNIES A L'ORIGINE D'UNE DECALCOMANIE DE SECURITE. LA DECALCOMANIE CORRESPONDANTE DOIT AUSSI ETRE COMMANDEE ET MONTEE.

ALLGEMEINE HINWEISE

A5

I TEXTSEITEN MIT TEILNUMMERN

(1) BEISPEIL

A	B	C	D	E	F	G	H	J
							K	L
1		*1611168M4*	1		1	DIFFERENTIAL	DIFFERENTIEL DIFFERENZIALE	DIFFERENTIAL DIFFERENCIAL
2		*3619014M1*	2		1	KIT	JEU IL GRUPPO	REPARATURSATZ JUEGO
3			2	REF.2	1	CROWNWHEEL	COURONNE CORONA	TELLERRAD CORONA
4			2	REF.2	1	PINION	PIGNON PIGNONE	ZAHNRAD PINON
5	*	**3617401M5**	2	1234567	1	BOLT	BOULON BULLONE	SCHRAUBE PERNO
6	*	3617352M3	2	1234567	1	BOLT	BOULON BULLONE	SCHRAUBE PERNO

(2) ERLAEUTERUNG

COL. A — POSITIONSNUMMER DER ABBILDUNG

COL. B — EIN STERN BEDEUTET AENDERUNG GEGENEUBER VORIGER AUSGABE

COL. C — TEILNUMMER (SEHE ABSATZ 2)

COL. D — EINZELTEIL VON KOMPLETTEIL, DESSEN POSITIONSNUMMER HIER ANGEGEBEN IST

COL. E — BEMERKUNGEN (SIEHE SYMBOLE UND HINWEISE)

COL. F — ANZAHL (SIEHE UNTENSTEHENDE ANMERKUNG)

COL. G.H.J.K.L — SPRACHEN - DESCHREIBUNG ENGLICH, FRANZOESISCH, DEUTSCH, ITALIENSCH UND SPANISCH

II FESTSTELLEN DER TEILNUMMER

1611168M4 = LAGERVORSCHLAGSTEILE UND SCHWERPUNKTEILE MARKETING

3619014M1 = LAGERVORSCHLASTEILE

3617401M5 = SCHWERPUNKTEILE MARKETING

3617352M3 = TEIL OHNE SPEZIFIKATIONS KENNZEICHNUNG

(3) ANMERKUNGEN

DIE IN SPALTE 'F' AUFGEFUEHRTE ANZAHL IST DIE AND DIESTER STELLE BENOETIGTE ANZAHL. FALLS ES SICH UMEIN EINZELTEIL EINES KOMPLETTEILS HANDEL, IST DIE ANZAHL PRO KOMPLETTEIL ORDER ZUSAM-MENBAUGEMEINT.

FUER TEILE WIE EINSTELLBLECHE, SCHEIBEN USW BEDEUTET EIN 'X' IN DER ANZAHLSPALT "ANZAHL NACH BEDARF".

DIE TEILNUMMER DER ERSATZTEILLISTE, AUSGABENUMMER UND DATUM SIND IN DER RECHTEN UNTEREN ECKE DER BILDSEITE AUFGEFUEHRT. DIE AUSGABENUMER STEHT IN KLAMMERN.

ZUR LAGERHALTUNG EMPFOHLENE ERSATZTEILE

DER ERSATZTEIL INDEX ENTHAELT EINE SPALTE "MENGE", WELCHE DIE ANZAHL DER ZUM ZUSAMMENBAU ERFORDERLICHEN ANGIBT.

WECHTIGER HINWEIS

WENN ERSETZTE TEILE BESTELLT WERDEN, BEI DENEN SICHERHEITSABZIEHBILDER WAREN, MUESSEN DIE ENTSPRECHENDEN SICHERHEITZABZIEHBILDER BESTELLT UND ANGEBRACHT WERDEN.

I ELENCO DEL PARTICOLARI RICAMBIO

(1) ESEMPION

A	B	C	D	E	F	G	H	J
							K	L
1		*1611168M4*	1		1	DIFFERENTIAL	DIFFERENTIEL DIFFERENZIALE	DIFFERENTIAL DIFFERENCIAL
2		*3619014M1*	2		1	KIT	JEU IL GRUPPO	REPARATURSATZ JUEGO
3			2	REF.2	1	CROWNWHEEL	COURONNE CORONA	TELLERRAD CORONA
4			2	REF.2	1	PINION	PIGNON PIGNONE	ZAHNRAD PINON
5	*	**3617401M5**	2	1234567	1	BOLT	BOULON BULLONE	SCHRAUBE PERNO
6	*	3617352M3	2	1234567	1	BOLT	BOULON BULLONE	SCHRAUBE PERNO

(2) SPIEGAZIONE

COL. A NUMERO DI RIFERIMENTO DELL ILLUSTRAZIONE

COL. B UN ASTERISCO INDICA UNA VARIAZIONE RISPETO ALL ULTIMA EMISSIONE

COL. C NUMERO DEL RECAMBIO (VEDER PARAGRAFO 2)

COL. D IL PARTICOLARE E ANCHE COMPONENTE DI UN GRUPPO IL CUI NUMERO DI ILLUSTRAZIONE E INDICATO

COL. E COMENTO (VEDER SIMBOLI E NOTE)

COL. F QUANTITA RECHIESTA (VEDERE NOTA A SEQUITO)

COL. G.H.J.K.L DESCRIZIONE - SEQUENZA LIGNUA : INGLESE, FRANCESE, TEDESCO, ITALIANO E SPAGNOLO

II CODICE IDENTIFICAZIONE DEL PARTICOLARE

1611168M4 = PEZZI CHE RECOMANDIANO DI TENERE A MAGAZZINO E PEZZI ESSENZIALI PER IL MARKETING

3619014M1 = PEZZI CHE RECOMANDIANO DI TENERE A MAGAZZINO

3617401M5 = PEZZI ESSENZIALI PER IL MARKETING

3617352M3 = SENZA CODICE IDENTIFICAZIONE DEL PARTICOLARE

(3) NOTE AGGIUNTIVE

LA QUANTITA INDICATA NELLA COLONNA 'F' CORRISPONDE ALLA QUANTITA RICHIESTA PER LA PARTICOLARE APPLICAZIONE ILLUSTRATA. QUALORA LA PARTE SIA COMPONENTE DI UN GRUPPO, LA QUANTITA INDICATA SI REFERISCE ALLA QUANTITA CONTENUTA NEL GRUPPO.
PER PARTICOLARI COME SPESSORI, RONDELLE ETC. UNA 'X' NELLA COLONNA DELLA QUANTITA STA A INDICARE "QUANTITA A RICHIESTA"

IL NUMERO DI RIFERIMENTO DEL CATALOGO, IL NUMERO DI EDIZIONE E LA DATA SONO RIPORTATI IN BASSO A DESTRA NELLA PAGINA ILLUSTRATIVA.

PEZZI CHE RECCOMANDIANO DI TENERE A

L'INDICE DELA LISTA RICAMBI INCLUDE UNA COLONNA QTY CHE INDICA LA QUANTITA PER OGNI CODICE RICAMBI NECESSARIA PER IL MONTAGIO.

NOTA PER LA SICUREZZA

QUANDO VIENE ORDINATO UN PEZZO AL QUALE ERANO ORIGINARIAMENTE APPLICATE LE DECALCOMANIE PER LA SICUREZZA ANCHE QUESTE ULTIME DEVONO ESSERE ORDINATE E APPLICATE AL PEZZO PRIMA DELLA CONSEGNA AL CLIENTE.

I LISTAS CON LOS NUMEROS DE REFERENCIA DE LAS PIEZAS

(1) EJEMPLO

A	B	C	D	E	F	G	H	J
							K	L
1		*1611168M4*	1		1	DIFFERENTIAL	DIFFERENTIEL DIFFERENZIALE	DIFFERENTIAL DIFFERENCIAL
2		*3619014M1*	2		1	KIT	JEU IL GRUPPO	REPARATURSATZ JUEGO
3			2	REF.2	1	CROWNWHEEL	COURONNE CORONA	TELLERRAD CORONA
4			2	REF.2	1	PINION	PIGNON PIGNONE	ZAHNRAD PINON
5	*	**3617401M5**	2	1234567	1	BOLT	BOULON BULLONE	SCHRAUBE PERNO
6	*	3617352M3	2	1234567	1	BOLT	BOULON BULLONE	SCHRAUBE PERNO

(2) EXPLICACION

COL. A — NUMERO DE REFERENCIA DEL DIBUJO

COL. B — UN ASTERISCO INDICA UNA MODIFICATION DESDE LA ULTIMA EDICION

COL. C — NUMERO DE PIEZA (VER PARAGRAFO 2)

COL. D — PIEZA INCLUIDA EN EL CONJUNTO CUYO NUMERO DE REFERENCIA DE DIBUJO SE INDICA COMENTARIO (VEANSE LOS SIMBOLOS Y LAS NOTAS)

COL. E — CANDIDAD NECESARIA (VER NOTA A CONTINUACION)

COL. F — CANDIDAD NECESARIA (VER NOTA A CONTINUACION)

COL. G.H.J.K.L — DESCRIPCION - FORMATO DE IDIOMA - INGLES, FRANCES, ALEMAN, ITALIANO Y ESPANOL

II IDENTIFICATION DE NUMERO DE REFERENCIA

1611168M4 = RECAMBIO QUE SE RECOMENDA MANTENER EN STOCK Y RECAMBIO SELECCIONADO POR MARKETING COMO PIEZAS CLAVE

3619014M1 = RECAMBIO QUE SE RECOMIENDA MANTENER EN STOCK

3617401M5 = RECAMBIO SELECCIONADO POR MARKETING COMO PIEZAS CLAVE

3617352M3 = RECAMBIO SIN MARCAS ESPECIFICAS

(3) NOTAS ESPECIALES

LA CANTIDAD INDICADA EN LA COLUMNA 'F' ES LA CANTIDAD NECESARIA PARA EL CONJUNTO DISENADO EN LA PAGINA CONTIGUA, EL NUMERO POR LO TANTO INDICA LA CANTIDAD CORRESPONDIENTE AL CONJUNTO O SUBCONJUNTO Y NO A LA MAQUINA COMPLETA.

PARA DETERMINADAS PIEZAS COMO ESPACIADORES, ARANDELAS, ETC. UNA 'X' EN LA COLUMNA DE CANDIDADES INDICA "SEGUN NECESIDADES".

LA REFERENCIA DEL CATALOGO NUMERO Y FECHA DE EDICION ESTAN IMPRESAS EN EL ANGULO DERECHO INFERIOR DE LA PAGINA ILLUSTRADA EL NUMERO DE EDICION ESTA INDICADO ENTRE PARENTESIS.

RECAMBIO QUE SE RECOMIENDIA MANTENER EN STOCK

L'INDEX NUMERICO DE ESTAS PIEZAS INCLUSO UNA COLUMNA QTY QUE LISTA LA CANTIDAD UTILISADA DE CADA PIEZA POR MEL MONTAJE.

AVISO DE SEGURIDAD

CUANDO SE PIDEN PIEZAS DE REPUESTO QUE ORIGINALIMENTE LLEVABAN CALCOMANIAS DE SEGURIDAD HAY QUE PEDIR Y COLOCAR TAMBIEN LAS CALCOMANIAS APROPIADAS.

SYMBOLS / SYMBOLES / SYMBOLE / SIMBOLI / SIMBOLOS

A8

	FOUR WHEEL DRIVE	4 ROUES MOTRICES 4 RUEDAS MOTRIZ	4 RAD ANTRIEB 4 RUEDAS MOTRIZ
	TWO WHEEL DRIVE	2 ROUES MOTRICES 2 RUEDAS MOTRIZ	2 RAD ANTRIEB 2 RUEDAS MOTRIZ
	FOR GERMANY ONLY OR ANY TEXT IN GERMAN ONLY	POUR ALLEMAGNE SEULEMENT OU EN ALLEMAND PARA ALEMANIA SOLAMENTE O EN ALEMAN SOLAMENTE	NUR FUER DEUTSCHLAND ODER TEXT NUR IN DEUTSCH PARA ALEMANIA SOLAMENTE O EN ALEMAN SOLAMENTE
	FOR FRANCE ONLY OR ANY TEXT IN FRENCH ONLY	POUR FRANCE SEULEMENT OU EN FRANÇAIS PARA FRANCIA SOLAMENTE O EN FRANCES SOLAMENTE	NUR FUER FRANKREICH ODER TEXT NUR IN FRANZOESICH PARA FRANCIA SOLAMENTE O EN FRANCES SOLAMENTE
	FOR ITALY ONLY OR ANY TEXT IN ITALIAN ONLY	POUR ITALIE SEULEMENT OU EN ITALIEN PARA ITALIA SOLAMENTE O EN ITALIANO SOLAMENTE	NUR FUER ITALIEN ODER TEXT NUR IN ITALIENSCH PARA ITALIA SOLAMENTE O EN ITALIANO SOLAMENTE
	FOR UK ONLY OR ANY TEXT IN ENGLISH ONLY	POUR ROYAUME UNI SEULEMENT OU EN ANGLAIS PARA INGLATERRA SOLAMENTE O EN INGLES SOLAMENTE	NUR FUER ENGLAND ODER TEXT NUR IN ENGLISCH PARA INGLATERRA SOLAMENTE O EN INGLES SOLAMENTE
	FOR AMERICAS REGION	POUR AMERIQUES PARA REGION DE LAS AMERICAS SOLAMENTE	FUER AMERICA PARA REGION DE LAS AMERICAS SOLAMENTE
	FOR ASIA/AFRICA/AUSTRALASIA REGION	POUR ASIE/AFRIQUE/AUSTRALASIE PARA ASIA/AGRICA/AUSTRALASIA SOLAMENTE	FUER ASIEN/AFRIKA/AUSTRALIEN PARA ASIA/AFRICA/AUSTRALASIA SOLAMENTE
	FOR EXPORT EUROPE	POUR EXPORT EUROPE PARA EXPORTACION EUROPA	FUER EUROPA PARA EXPORTACION EUROPA
	FOR UNITED STATES OF AMERICA	POUR ETATS UNIS D'AMERIQUE PARA EE UU DE AMERICA	FUER USA PARA EE UU DE AMERICA
	FOR AUSTRALIA	POUR AUSTRALIE PARA AUSTRALIA	FUER AUSTRALIEN PARA AUSTRALIA
	FOR SWEDEN	POUR SUEDE PARA SUECA	FUER SCHWEDEN PARA SUECA
	FOR NORWAY	POUR NORVEGE PARA NORVEGA	FUER NORWEGEN PARA NORVEGA
	FOR SOUTH AFRICA	POUR AFRIQUE DU SUD PARA AFRICA DEL SUR	FUER SUED-AFRIKA PARA AFRICA DEL SUR
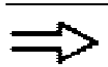	REPLACE AND REPAIR OLD IS NOT INTERCHANGEABLE WITH NEW	REMPLACE ET RECHANGE NON INTERCHANGEABLE SOSTITUIRE E RIPARARE/NUOVO-VECCHIO NON INTERC.	FUER ERSATZ ALTE VERSION NICHT AUSTAUS. MIT NEUER VERSION REEMPLAZAR Y REPARAR/LA ANTERIOR NO ES INTERCAM. CON LA NUEVA
	REPLACE AND REPAIR - OLD AND NEW INTERCHANGEABLE	REMPLACE ET RECHANGE - INTERCHANGEABLE SOSTITUIRE E RIPARARE/NUOVO-VECCHIO SONO INTERC.	FUER ERSATZ - ALTE VERSION AUSTAUS. MIT NEUER VERSION REEMPLAZAR Y REPARAR/ANTERIOR Y NUEVAS SON INTERCAMB.

SYMBOLS / SYMBOLES / SYMBOLE / SIMBOLI / SIMBOLOS

A9

RIGHT HAND	DROITE DESTRA	RECHTS DERECHA
LEFT HAND	GAUCHE SINISTRA	LINKS IZQUIERDA
WIDTH	LARGEUR LARGHEZZA	BREITE ANCHURA
LENGTH	LONGUEUR LUNGHEZZA	LANGE LONGITUD
THICKNESS	EPAISSEUR SPESSEZZA	STAERKE ESPESOR
DIAMETER	DIAMETRE DIAMETRO	DURCHMESSER DIAMETRO
NUMBER OF TEETH/SPLINES	NOMBRE DE DENTS/CANNELURES NUMERO DE DENTES/CALETTATURAS	ANZAHL DER ZAEHNE/YERZAHNUNG NUMERO DE DIENTES/RANURAS
TOP	HAUT PARTE SUPERIORE	OBEN PARTE SUPERIOR
BOTTOM	BAS PARTE INFERIORE	UNTEN PARTE INFERIOR
FROM SERIAL OR ENGINE NUMBER	A PARTIR DU NUMERO DE SERIE DU NUMERO DE MOTEUR DESDE EL NUMERO	AB SERIEN-ODER MOTOR NUMMER DESDE EL NUMERO
UP TO SERIAL OR ENGINE NUMBER	JUSQU'AU NUMERO DE SERIE OU NUMERO DE MOTEUR HASTA EL NUMERO	DROITE HASTA EL NUMERO
REPAIRS AND REPLACES	REMPLACE ET RECHANGE SURROGARE Y RICAMBIO	ERSETZT REEMPLAZA Y SUSTIUYE
SEE PAGE - REFERENCE NUMBER	VOIR PAGE - NUMERO DE REFERENCE VER PAGINA - NUMERO DE REFERENCIA	SIEHE SEITE - POSITIONSNUMMER VER PAGINA NUMERO DE REFERENCIA
ALTERNATIVE	ALTERNATIVE ALTERNATIVO	WAHLWEISE ALTERNATIVO
NOT SERVICED, ORDER	PAS FOURNIES, COMMANDER NO SUMINISTRADAS, PEDIR	NICHT LIEFERTEILE, BESTELLE NO SUMINISTRADAS, PEDIR
WITHOUT OR NOT FOR. EXAMPLE: NOT FOR ENGLAND	SANS OU PAS POUR EXAMPLE : PAS POUR ANGLETERRE SON O NO PARA. EJEMPLO : NO PARA INGHILTERRA	OHNE ODER NICHT FUER. BEISPEL : FUER DEUTSCHLAND SON O NO PARA. EJEMPLO : NO PARA INGLETERRA

	A10	

RESERVED

GROUP INDEX ALPHA
GROUPES DE MONTAGE
GRUPPENVERZEICHNIS
GRUPPO INDICE
GRUPOS DE MONTAJE

B 1

		PAGE
XA06 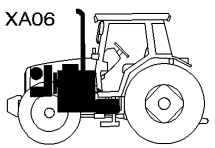	ENGINE & EQUIPMENT MOTEUR & EQUIPEMENT MOTOR & AUSRÜSTUNG MOTORE & EQUIPAGGIAMENTO MOTOR & HERRAMENTAL	10
XD01 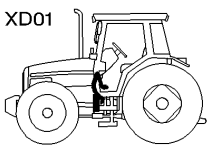	CLUTCH EMBRAYAGE KUPPLUNG FRIZIONE EMBRAGUE	20
XE04 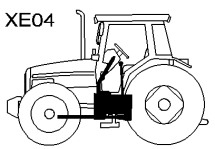	TRANSMISSION TRANSMISSION KRAFTÜBERTRAGUNG TRANSMISSIONE TRANSMISIÓN	25
XG01 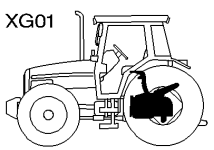	REAR AXLE ESSIEU ARRIERE HINTERACHSE ASSALE POSTERIORE EJE TRASERO	30
XG55 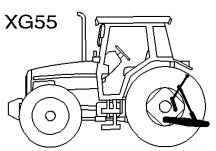	LINKAGE ATTELAGE KUPPLUNG ATTACCO ENGANCHE	40
XG56 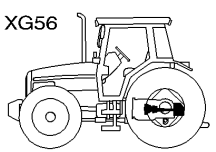	PTO DRIVE MECHANISM TRANSMISSION PRISE DE FORCE ZAPFWELLENANTRIEB TRANSMISSIONE PRESA DI POTENZA TRANSMISION TOMA DE FUERZA	50

		PAGE
XJ01 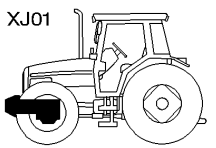	FRONT AXLE ESSIEU AVANT VORDERACHSE ASSE ANTERIORE EJE DELANTERO	60
XP28 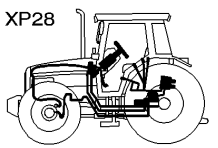	HYDRAULIC HYDRAULIQUE HYDRAULISCHE IDRAULICO HIDRAULICO	70
XU21 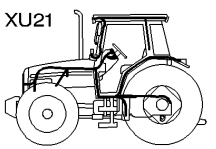	ELECTRICAL EQUIPMENT & INSTRUMENT PANEL EQUIPEMENT ELECTRIQUE & TABLEAU DE BORD ELEKTRISCHE ANLAGE & INSTRUMENTENBRETT IMPIANTO ELETTRICO & CRUSCOTTO INSTALACION ELECTRICA & TABLERO DE INSTRUMENTOS	80
XU22 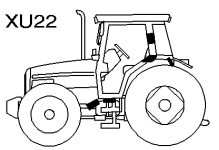	ELECTRONIC EQUIPMENT EQUIPEMENT ELECTRONIQUE ELEKTRONISCHAUSSTATTUNG EQUIPAGGIAMENTO ELETTRONICA EQUIPO ELECTRONICA	90
XY54 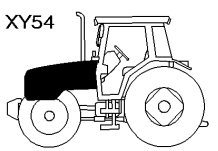	BODY CARROSSERIE KAROSSERIE CARROZZERIA CARROCERIA	100
XY55 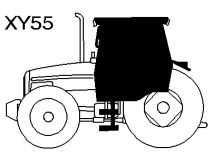	TRACTOR CAB CABINE TRACTEUR TRACTOR KABINE CABINA TRATTORE CABINA TRACTOR	110

GROUP INDEX ALPHA
GROUPES DE MONTAGE
GRUPPENVERZEICHNIS
GRUPPO INDICE
GRUPOS DE MONTAJE

B 2

PAGE

XY56

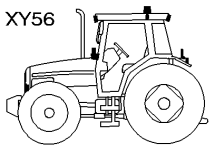

LIGHTING
ECLAIRAGE
BELEUCHTUNG
ILLUMINAZIONE
ILUMINACIÓN

120

XY57

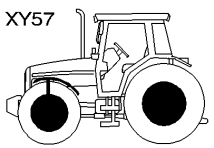

RIMS & WHEELS WEIGHTS
JANTES & MASSES DE ROUES
FELGEN & RAEDGEWICHTE
CERCHIONI & MASSE DI RUOTE
LLANTAS & MASAS DE RUEDAS

130

PAGE

RESERVED

ALPHABETICAL INDEX

C1

PAGE

Body
- Decals
  - Safety 100 - 35
- Emblems 100 - 30
- Footstep 100 - 25
- Literature 100 - 50
- Sheet Metal
  - Grille 100 - 5
  - Hood 100 - 15
  - Hood Frame 100 - 20

Clutch
- Clutch Control 20 - 20
- Flywheel & Flywheel Housing 20 - 15
- Front Spacer 20 - 5

Electrical Equipment & Instrument Panel
- Automatic Air Conditioner Harness & Sensors 80 - 90
- Electric Equipment & Instrument Panel 80 - 10
- Engine Harness 80 - 25
- External Controls Fitted On The Rear Fenders 80 - 20
- Field Lights Harness 80 - 85
- Front Lightning Harness 80 - 55
- Instrument Panel & Instruments 80 - 5
- Instrument Panel Harness 80 - 35
  - Armrest 80 - 35
- Pillar Harness 80 - 50
- Plate Relay & Fuse Holder 80 - 40
- Rear Lightning Harness 80 - 65
- Roof Harness 80 - 45
- Side Console Switches 80 - 15
- Trailor Electric Socket 80 - 75

Electronic Equipment
- Aboard Computer And Plate Lighting Equipement 90 - 25
- Control Box
  - Cab 90 - 65
- Control Box Harness & Cab Controls 90 - 70
- Electronic Equipment
  - Sensors 90 - 95

PAGE

- Electronic Lift
  - Console 90 - 20
  - Main Harness 90 - 5
- Fieldstar 90 - 55
- Front Axle Suspended Harness / Control Box 90 - 60
- Harness "Isobus" 90 - 50
- Radar 90 - 40
- Side Console Harness
  - Cab 90 - 80
- Transmission Main Harness 90 - 85

Engine & Equipment
- Additional Tank 10 - 140
- Air Cooler 10 - 190
- Air Filter
  - Dry - Dual Element 10 - 195
- Air Induction & Exhaust 10 - 80
- Alternator 10 - 15
- Alternator & Bracket 10 - 10
- Batteries And Cables 10 - 155
- Belt Tensioner 10 - 95
- Cab Heating System
  - Engine Part 10 - 130
- Centrigual Oil Filter 10 - 125
- Compresser 10 - 175
- Cooling System
  - Air Conditioned Installation 10 - 170
  - Engine 10 - 180
- Crankshaft, Piston & Connecting Rods 10 - 35
- Cylinder Block 10 - 25
- Cylinder Head 10 - 45
- Cylinder Head Cover 10 - 50
- Electronic Engine Management 10 - 100
- Engine & Equipment 10 - 5
- Engine Gaskets Sets 10 - 110
- Engine Repair Kits
  - Piston- Cylinder Head With Valves 10 - 105
- Fuel Pipes 10 - 145
- Fuel System 10 - 150
- Fuel Tank & Attachments 10 - 135

ALPHABETICAL INDEX

C2

	PAGE
Heater Engine Block	10 - 115
Injection System	10 - 70
Low Pressure Fuel System	10 - 75
Lubricating Oil Cooler And Filter	10 - 60
Oil Sump	10 - 55
Starter	10 - 20
Throttle Controls	10 - 230
Timing Gear Housing	10 - 30
Turbocharger	
Pipes	10 - 85
Valve Mechanism And Camshaft	10 - 40
Vertical Exhaust On The Side	10 - 210
Water Pump	10 - 65
Front Axle	
Belly Weight	60 - 20
Front Axle 4 Wheel Drive	60 - 25
Bracket	60 - 25
Clutch	60 - 45
Differential	60 - 90
Differential Lock Mechanism	60 - 35
Final Drive	60 - 100
Housing	60 - 75
Guard And Transmission Shaft	60 - 40
Hydraulic Valve Block	60 - 110
Weight Frame And Tow Pin	60 - 5
Hydraulic	
Auxiliary Distributor	70 - 200
Auxiliary Distributors Installation	70 - 185
Auxiliary Hydraulics	70 - 125
Brackets Pedal	70 - 35
Brake Pedals	70 - 40
Brake Valve	70 - 55
Brakes	
Hydraulic Pipes	70 - 45
Control With 5-6 Distributors Electrodynamique	
Module Fingertip	70 - 250
Feed Pump	
System Comfort	70 - 75
Front Suspension Hydraulic Lines	70 - 30
Gear Box Lubrication	70 - 85
Interior	70 - 85
Hydraulic Brake Assy	70 - 60
Hydraulic Circuit	
Transmission	70 - 90
Hydraulic Coupling	70 - 225
Hydraulic Pump	70 - 175
Hydraulic Valve Block	70 - 115
Hydraulic Lines	70 - 115
Pressure Filter	70 - 100
Solenoid Valve	70 - 110
Hydraulique Manifold	70 - 155
Lighting Power Shuttle Drive	70 - 15
Lube Oil Pump	
Filter	70 - 70
Oil Cooler	70 - 120
Oil Recovery	70 - 245
Pump Drive	70 - 65
Steering Hydraulic Lines	70 - 25
Steering Pump	70 - 20
Steering Wheel And Telescopic Column	70 - 5
Lighting	
Field Lights	120 - 25
Lighting Equipment	
Front	120 - 5
Rear	120 - 40
Rotating Light	120 - 50
Traffic Warning	120 - 35
Linkage	
Front Linkage	
Hydraulic	40 - 100
Front Linkage 50000n	40 - 115
Hitch	40 - 95
Levelling Box	40 - 20
Lift Cylinders	40 - 5
Lift Cylinders Feeding	40 - 15
Lower Bar With Hook	40 - 45

ALPHABETICAL INDEX

C3

	PAGE
Lower Bar With Toogle	40 - 50
Sensing Pin	40 - 40
Shoe Stabilizers	40 - 60
Swinging Drawbar	40 - 65
Swinging Drawbar Support	40 - 80
Top Link Lock	40 - 35
Top Link With Ball End	40 - 30
Top Link With Hook End	40 - 25
Tube Stabilizers	40 - 55
Pto Drive Mechanism	
Engine P . T . O	
Cylinder	50 - 20
Flange - Bridle	50 - 15
Pipes	50 - 25
Guard	
Pto	50 - 30
Independant Power Take Off Clutch	50 - 5
Rear Axle	
Angle Sensor	30 - 75
Bevel Drive	30 - 45
Cardan Brake	30 - 65
Differential	30 - 40
Disc Brakes	30 - 60
Handbrake	30 - 5
Lift Arms	30 - 70
Oil Level Indicator	30 - 35
Rear Axle Housings	
Inner Final Drive Gear	30 - 55
Wheel Shaft Housing	30 - 30
Rims & Wheels Weights	
Front Axle 4 Wheel Drive	
Mudguards And Supports	130 - 20
Front Wheels	
4 Wheel Drive	130 - 5
Rear Wheels	130 - 60
Fixing By Cone	130 - 60
Wheel Weights	130 - 65
Tractor Cab	
Air Conditioner	110 - 115
Hose	110 - 115
Cab Filter	110 - 140
Cab Mountings	110 - 10
With Suspension	110 - 10
Canopy	110 - 165
Doors	110 - 40
Electric Control Rear Reflecting Miror	110 - 200
Electrical Plug & Cigar Lighter	110 - 175
External Mirrors	110 - 195
Front Windscreen Wiper	110 - 150
Glass	110 - 45
Heater Control	110 - 145
Instrument Panel Cladding	110 - 85
Internal Mirrors	110 - 190
Radio Installation	110 - 170
Rear Window Mechanism	110 - 55
Rear Window Wiper	110 - 160
Roof	110 - 60
Seat	110 - 205
Seat Belt	110 - 240
Secondary Seat	110 - 245
Side Window Mechanism	110 - 50
Suspended Cab Control Unit	110 - 15
Tractor Cab	110 - 90
Cab Insulation	110 - 90
Cladding	110 - 65
Fenders	110 - 100
Windscreen Washer	110 - 155
Transmission	
Accumulator Shaft	25 - 30
Adjusting Device	25 - 50
Control Armrest	25 - 95
Duct Plate	25 - 45
Gear Box	25 - 10
Group Gear Shifting	25 - 75
Hydraulic Pump	25 - 35
Hydraulique Motor	25 - 40

ALPHABETICAL INDEX

C4

	PAGE
Inner Housing	**25 - 15**
Module Fingertip For Distributor With Electrodynamique Control	**25 - 105**
Planetary Drive	**25 - 20**
Pump Shaft	**25 - 25**
Transmission Housing	**25 - 5**
Transmission Control	**25 - 80**
Emergency Control - Drive Line	**25 - 80**
Emergency Control - Range	**25 - 85**

INDEX ALPHABETIQUE

C5

	PAGE
Attelage	
Alimentation Verin De Relevage	**40 - 15**
Attelage Avant	
Hydraulique	**40 - 100**
Attelage Avant 50000n	**40 - 115**
Barre De 3eme Point A Crochet	**40 - 25**
Barre De 3eme Point A Rotule	**40 - 30**
Barre Oscillante	**40 - 65**
Barres Inferieures A Crochet	**40 - 45**
Barres Inferieures A Rotule	**40 - 50**
Boitier De Nivellement	**40 - 20**
Capteur D'Effort	**40 - 40**
Crochet D'Attelage	**40 - 95**
Stabilisateurs A Sabots	**40 - 60**
Stabilisateurs A Tube	**40 - 55**
Support De Barre Oscillante	**40 - 80**
Verins De Relevage	**40 - 5**
Verrouillage Barre De 3eme Point	**40 - 35**
Cabine Tracteur	
Air Conditionne	**110 - 115**
Durite	**110 - 115**
Boite De Commande Cabine Suspendue	**110 - 15**
Cabine Tracteur	**110 - 100**
Ailes	**110 - 100**
Habillage	**110 - 65**
Insonorisation	**110 - 90**
Ceinture De Securite	**110 - 240**
Commande De Chauffage	**110 - 145**
Essuie Glace Arriere	**110 - 160**
Essuie Glace Avant	**110 - 150**
Filtre De Cabine	**110 - 140**
Fixation Cabine	**110 - 10**
Avec Suspension	**110 - 10**
Habillage Tableau De Bord	**110 - 85**
Lave Glace	**110 - 155**
Mecanisme De Glace Arriere	**110 - 55**
Mecanisme De Glace Laterale	**110 - 50**
Montage Radio	**110 - 170**
Pare Soleil	**110 - 165**

	PAGE
Portes	**110 - 40**
Prise De Courant & Allume Cigare	**110 - 175**
Retroviseur A Commande Electrique	**110 - 200**
Retroviseurs Exterieurs	**110 - 195**
Retroviseurs Interieurs	**110 - 190**
Siege	**110 - 205**
Siege Secondaire	**110 - 245**
Toit	**110 - 60**
Vitres	**110 - 45**
Carrosserie	
Carrosserie	
Armature Capot	**100 - 20**
Calandre	**100 - 5**
Capot	**100 - 15**
Decalcomanies	
Securite	**100 - 35**
Emblemes	**100 - 30**
Litterature	**100 - 50**
Marchepieds	**100 - 25**
Eclairage	
Eclairage	
Arriere	**120 - 40**
Avant	**120 - 5**
Equipement Signalisation	**120 - 35**
Gyrophare	**120 - 50**
Phare De Travail	**120 - 25**
Embrayage	
Carter Entretoise Avant	**20 - 5**
Commande De L'Embrayage	**20 - 20**
Volant Moteur & Carter De Volant	**20 - 15**
Equipement Electrique & Tableau De Bord	
Commandes Externes Montee Sur Les Ailes Arrieres	**80 - 20**
Equipement Electrique & Tableau De Bord	**80 - 10**
Faisceau Climatiseur Automatique & Capteurs	**80 - 90**
Faisceau De Pilier	**80 - 50**
Faisceau Eclairage Arriere	**80 - 65**
Faisceau Eclairage Avant	**80 - 55**

INDEX ALPHABETIQUE

C6

	PAGE
Faisceau Moteur	80 - 25
Faisceau Phares De Travail	80 - 85
Faisceau Plafond	80 - 45
Faisceau Tableau De Bord	80 - 35
Accoudoir	80 - 35
Interrupteurs Console Laterale	80 - 15
Platine Porte Fusibles & Relais	80 - 40
Prise Electrique De Remorque	80 - 75
Tableau De Bord & Instruments	80 - 5
Equipement Electronique	
Boite De Controle	
Cabine	90 - 65
Equipement Electronique	
Capteurs	90 - 95
Faisceau "Isobus"	90 - 50
Faisceau Boite De Controle & Commandes Cabine	90 - 70
Faisceau De Console Laterale	
Cabine	90 - 80
Faisceau Pont Avant Suspendu / Boite De Controle	90 - 60
Faisceau Transmission Principal	90 - 85
Fieldstar	90 - 55
Ordinateur De Bord & Platine D'Eclairage	90 - 25
Radar	90 - 40
Relevage Electronique	
Console	90 - 20
Faisceau Principal	90 - 5
Essieu Arriere	
Bras De Relevage	30 - 70
Capteur D'Angle	30 - 75
Carter D'Arbres De Roues	30 - 30
Controle De Niveau D'Huile	30 - 35
Couple Conique	30 - 45
Differentiel	30 - 40
Frein A Cardan	30 - 65
Frein A Main	30 - 5
Freins A Disques	30 - 60
Trompettes D Essieu Arriere	
Couronne Reduct.Finale Interieure	30 - 55

	PAGE
Essieu Avant	
Bloc Valve Hydraulique	60 - 110
Essieu Avant 4 Roues Motrices	60 - 35
Blocage De Differentiel	60 - 35
Carter	60 - 75
Differentiel	60 - 90
Embrayage	60 - 45
Reduction Finale	60 - 100
Support	60 - 25
Garant Et Arbre De Transmission	60 - 40
Masse Ventrale	60 - 20
Support De Masses Et Broche	60 - 5
Hydraulique	
Bloc Valve Hydraulique	70 - 100
Filtre Pression	70 - 100
Tuyauteries	70 - 115
Valve Solenoide	70 - 110
Circuit Hydraulique	
Transmission	70 - 90
Commande Avec 5-6 Distributeurs Electro -Hydraulique	
Module Fingertip	70 - 250
Commande Eclairage Et Inverseur Sous Couple	70 - 15
Commande Pompe	70 - 65
Coupleur Hydraulique	70 - 225
Distributeur Auxiliaire	70 - 200
Freinage Hydraulique	70 - 60
Freins	
Tuyauterie Hydraulique	70 - 45
Hydraulique Auxiliaire	70 - 125
Lubrification Boite De Vitesses	70 - 85
Interieur	70 - 85
Montage Distributeurs Auxiliaires	70 - 185
Pedales De Frein	70 - 40
Pompe A Huile	
Filtre	70 - 70
Pompe D' Alimentation	
Systeme Confort	70 - 75
Pompe De Direction	70 - 20
Pompe Hydraulique	70 - 175

INDEX ALPHABETIQUE

C7

	PAGE
Recuperation D'Huile	70 - 245
Refroidisseur D'Huile	70 - 120
Repartiteur Hydraulique	70 - 155
Supports Pedales	70 - 35
Tuyauteries Hydrauliques De Direction	70 - 25
Tuyauteries Hydrauliques De Suspension Avant	70 - 30
Valve De Frein	70 - 55
Volant De Direction Et Colonne Telescopique	70 - 5
Jantes & Masses De Roues	
Essieu Avant 4 Roues Motrices	
Garde Boue Et Supports	130 - 20
Masses De Roue	130 - 65
Roues Arriere	130 - 60
Fixation Par Cone	130 - 60
Roues Avant	
4 Roues Motrices	130 - 5
Moteur & Equipement	
Admission D'Air & Echappement	10 - 80
Alternateur	10 - 15
Alternateur Et Support	10 - 10
Batterie Et Cables	10 - 155
Bloc Cylindre	10 - 25
Cache Culbuteurs	10 - 50
Carter D'Huile	10 - 55
Carter De Distribution	10 - 30
Chauffage Cabine	
Partie Moteur	10 - 130
Circuit Carburant Basse Pression	10 - 75
Commande D'Acceleration	10 - 230
Compresseur	10 - 175
Culasse	10 - 45
Demarreur	10 - 20
Echappement Vertical Lateral	10 - 210
Filtre A Air	
Sec Deux Elements	10 - 195
Filtre A Huile Centrifuge	10 - 125
Gestion Moteur Electronique	10 - 100
Jeux De Joints Moteur	10 - 110
Kits Reparation Moteur	
Pistons - Culasse Avec Soupapes	10 - 105
Moteur & Equipement	10 - 5
Pompe A Eau	10 - 65
Rechauffeur Bloc Moteur	10 - 115
Refroidisseur D'Air	10 - 190
Refroidisseur D'Huile Et Filtre	10 - 60
Reservoir A Carburant Et Fixation	10 - 135
Reservoir Supplementaire	10 - 140
Soupapes Et Arbre A Cames	10 - 40
Systeme D'Alimentation Carburant	10 - 150
Systeme D'Injection	10 - 70
Systeme De Refroidissement	
Installation Air Conditionne	10 - 170
Moteur	10 - 180
Tendeur De Courroies	10 - 95
Turbocompresseur	
Canalisations	10 - 85
Tuyauteries A Carburant	10 - 145
Vilebrequin, Piston & Bielles	10 - 35
Transmission	
Accoudoir De Commande	25 - 95
Arbre De Pompe	25 - 25
Arbre Sommateur	25 - 30
Boite De Vitesses	25 - 5
Carter	25 - 5
Carter Interieur	25 - 15
Commande Boite De Vitesses	25 - 55
Commande De Vitesses	
Operation De Secours - Cable	25 - 80
Operation De Secours - Gamme	25 - 85
Enclenchement De Groupe	25 - 75
Module Fingertip Pour Distrib. A Commande Electro - Hydraulique	25 - 105
Moteur Hydraulique	25 - 40
Plaque De Conduite	25 - 45
Pompe Hydraulique	25 - 35
Reglage	25 - 50
Train Planetaire	25 - 20

INDEX ALPHABETIQUE

C8

PAGE

Transmission Prise De Force

Embrayage De Prise De Force Independante **50 - 5**

Garant

Prise De Force **50 - 30**

Prise De Force Independante

Cylindre **50 - 20**

Flasque - Bride **50 - 15**

Tuyauteries **50 - 25**

PAGE

ALPHABETISCHER INDEX

C9

PAGE

Beleuchtung

Arbeitsscheinwerfer 120 - 25
Beleuchtungsanlage
    Hinterteil 120 - 40
    Vorderseite 120 - 5
Rundumkennleucht 120 - 50
Signalgebungsausstattung 120 - 35

Elektrische Anlage & Instrumentenbrett

Aussenschaltung Auf Die Kotfluegel 80 - 20
Automatisch Klimaanlage Kabelnezt Und Sensoren 80 - 90
Elektr.-Anlage & Instrumentenbrett 80 - 10
Hinten Kabelnezt Beleuchtung 80 - 65
Instrumentenbrett & Armaturen 80 - 5
Kabelnezt Arbeitsscheinwerfer 80 - 85
Kabelnezt Dach 80 - 45
Kabelnezt Der Kabinesaeule 80 - 50
Kabelnezt Instrumentenbrett 80 - 35
    Armlehne 80 - 35
Kabelnezt Motor 80 - 25
Relais & Sicherung Halter Platte 80 - 40
Seitenkonsole Schalter 80 - 15
Steckeranhaenger 80 - 75
Vorne Kabelnezt Beleuchtung 80 - 55

Elektronischausstattung

Bord. Computer Und Beleuchtungsanlage Plate 90 - 25
Electron Aushebg
    Hauplkabelbaum 90 - 5
Elektron Ausrstg
    Sensoren 90 - 95
Elektron-Aushbg
    Konsole 90 - 20
Fieldstar 90 - 55
Gefedert Vorderaschse Kabel / Steuergeraet 90 - 60
Kabelnezt "Isobus" 90 - 50
Kraftubertragung Hauptkabelbaum 90 - 85
Radar 90 - 40
Seiten Konsole Kabel
    Kabine 90 - 80

PAGE

Steuergeraet
    Kabine 90 - 65
Steuergeraet Kabel Und Kabineantriebe 90 - 70

Felgen & Raedgewichte

Hinterraeder 130 - 60
    Anbau Der Konus 130 - 60
Radgewichte 130 - 65
Vorderachse-4wd
    Radabdeckung Mit Stutze 130 - 20
Vorderraeder
    Allradantrieb 130 - 5

Hinterachse

Ausgleichgetriebe 30 - 40
Handbremse 30 - 5
Hinterachsgehaeuse 30 - 55
    Endantrieb Innen 30 - 55
Hubarme 30 - 70
Kardanwellenbremse 30 - 65
Oelstandskontrolle 30 - 35
Scheibenbremsen 30 - 60
Tellerradsatz 30 - 45
Winkelsensor 30 - 75

Hydraulische

Antrieb Mit 5-6 Verteilers Elektrodynamischer
    Model Fingertip 70 - 250
Beleuchtung Unter Drehmoment Schaltung 70 - 15
Bremsen
    Hydraulik Leitungen 70 - 45
Bremspedal 70 - 40
Bremsventil 70 - 55
Flussigkeitsumlauf
    Getriebe 70 - 90
Foerderpumpe
    Komfortbetaet 70 - 75
Getriebeschmierung 70 - 85
    Innen 70 - 85
Halteren Pedal 70 - 35

ALPHABETISCHER INDEX

C10

	PAGE
Hydr. - Kupplung	70 - 225
Hydraulik Ventilblock	70 - 100
Druckfilter	70 - 100
Leitungen	70 - 115
Magnetventil	70 - 110
Hydraulik Verteilerdose	70 - 155
Hydraulikleitungen Lenkung	70 - 25
Hydraulikleitungen Vorderfederung	70 - 30
Hydraulikpumpe	70 - 175
Hydraulische Bremse	70 - 60
Lenkhilfepumpe	70 - 20
Lenkrad Und Saeuleteleskopisch	70 - 5
Oelkuehler	70 - 120
Olruckgewinnung	70 - 245
Pumpenantrieb	70 - 65
Schmieroelpumpe	
Filter	70 - 70
Zusatzhydraulik	70 - 125
Zuzatzeinbausverteilers	70 - 185
Zuzatzverteiler	70 - 200

Karosserie

Abziehbilder	
Sicherheit	100 - 35
Firmenzeichen	100 - 30
Literatur	100 - 50
Trittberetter	100 - 25
Verkleidung	
Kuehlergrill	100 - 5
Motorhaube	100 - 15
Motorhaube Armatur	100 - 20

Kraftübertragung

Getriebe	25 - 5
Gehaeuse	25 - 5
Getriebe-Schaltung	25 - 55
Gruppenschaltung	25 - 75
Hydraulikpumpe	25 - 35
Hydromotor	25 - 40
Innengehaeuse	25 - 15

	PAGE
Kanalplatte	25 - 45
Model Fingertip Fur Verteiler Mit Elektrodynamischer	
Antrieb	25 - 105
Planetentrieb	25 - 20
Pumpenwelle	25 - 25
Schaltung	
Hilfsbetaetigung - Fahren	25 - 80
Hilfsbetaetigung - Gruppe	25 - 85
Schaltung Armlehne	25 - 95
Summierungswelle	25 - 30
Verstellung	25 - 50

Kupplung

Anhaengekupplung	40 - 95
Anschluss	40 - 40
Druckzylinder	40 - 5
Druckzylinderversorgung	40 - 15
Frontkraftheber	
Hydraulik	40 - 100
Frontkraftheber 50000n	40 - 115
Hohenflosseschuh	40 - 60
Oberlenker Mit Haken	40 - 25
Oberlenker Mit Kugelgelenk	40 - 30
Oberlenkerriegel	40 - 35
Stabilisatoren	40 - 55
Unterstab Mit Gelenkzappen	40 - 50
Unterstab Mit Haken	40 - 45
Verstellgehaeuse	40 - 20
Zugpendel	40 - 65
Zugstangestuetze	40 - 80

Kupplung

Kupplungsbetatigung	20 - 20
Schwungrad & Schwungradgehaeuse	20 - 15
Vorderer Spacer	20 - 5

Motor & Ausrüstung

Anlasser	10 - 20
Batterie Und Kabel	10 - 155
Drehstromlichtmaschine	10 - 15
Drehstromlichtmaschine Und Support	10 - 10

ALPHABETISCHER INDEX

C11

	PAGE
Einspritzsystem	10 - 70
Heizung Motor	10 - 115
Kabinen-Heizungssystem	
Motor Teile	10 - 130
Kompressor	10 - 175
Kraftstof Leitungen	10 - 145
Kraftstoff-Niederdruckanlage	10 - 75
Kraftstoffanlage	10 - 150
Kraftstoffbehaelter Und Befestig.	10 - 135
Kraftstoffregelung	10 - 230
Kuehlsystem	
Klimaanlage-Einbau	10 - 170
Kuehlung	
Motor	10 - 180
Kurbelwelle, Kolben & Pleuel	10 - 35
Luftansaugung & Auspuff	10 - 80
Luftfilter	
Doppelter Trockenfiltereinsatz	10 - 195
Luftkuehler	10 - 190
Motor & Ausrüstung	10 - 5
Motor - Dichtungssaetze	10 - 110
Motor - Reparatursaetze	
Kolben, Zylinderkopf Mit Ventilen	10 - 105
Oelkuehler Und Filter	10 - 60
Olgehause	10 - 55
Riemenspanner	10 - 95
Schleude Hydraulikoelfilter	10 - 125
Senkrechtem Seitenauspuff	10 - 210
Steuerradgehause	10 - 30
Turbolader	
Rohre	10 - 85
Ventil-Anordnung Und Nockenwelle	10 - 40
Verwaltung Motor Electronische	10 - 100
Wasserpumpe	10 - 65
Zusastzlich Tank	10 - 140
Zylinderblock	10 - 25
Zylinderkopf	10 - 45
Zylinderkopfdeckel	10 - 50

Tractor Kabine

	PAGE
Asserruckspiegel	110 - 195
Beifahrersitz	110 - 245
Dach	110 - 60
Einfassung Instrumentenbrett	110 - 85
Fahrersitz	110 - 205
Filter Die Kabine	110 - 140
Heckfenster Ausstellvor	110 - 55
Heizung Schaltung	110 - 145
Hinterscheibenwischer	110 - 160
Innerruckspiegel	110 - 190
Kabinenbefestigung	110 - 10
Mit Federung	110 - 10
Klimaanlage	110 - 115
Schlauch	110 - 115
Ruckspiegel Mit Elektrische Schaltung	110 - 200
Rundfunk Anbau	110 - 170
Scheiben	110 - 45
Scheibenwascher	110 - 155
Scheibenwischer Vorderteil	110 - 150
Schlepper-Cabine	
Verkleidung	110 - 65
Schlepperkabine	110 - 90
Isolierung	110 - 90
Kotfluegel	110 - 100
Seitenfenster Ausstellvor	110 - 50
Sicherheitsgurt	110 - 240
Steck & Zigarrenanzuender	110 - 175
Steuereinheit Aufgehangtes Fahrerhaus	110 - 15
Tuer	110 - 40
Vordach	110 - 165

Vorderachse

	PAGE
Allradantrieb Vorderachse	
Kupplung	60 - 45
Gewichtrahmen Und Kupplungsbolzen	60 - 5
Grundgewicht	60 - 20
Hydraulik Ventilblock	60 - 110
Schutz Und Allradantriebswelle	60 - 40
Vorderachse 4 Rad Antrieb	
Halter	60 - 25
Vorderachse Allradantrieb	60 - 90

PAGE

Differential 60 - 90
Endantrieb 60 - 100
Gehaeuse 60 - 75
Vorderachse-4wd
Diff -Sperre 60 - 35

Zapfwellenantrieb
Ipto Kupplung 50 - 5
Motorzapfwelle
Flansh - Spannband 50 - 15
Rohrleitung 50 - 25
Zylinder 50 - 20
Schutzbleche
Zapfwelle 50 - 30

PAGE

INDICE ALFABETICO

C13

PAGE

Assale Posteriore

Carcassa Di Crocera Ruota 30 - 30
Control Livello Di Olio 30 - 35
Corona E Pignone 30 - 45
Differenziale 30 - 40
Freno A Disco 30 - 60
Freno A Mano 30 - 5
Freno Cardanico 30 - 65
Scatole Riduttori
Corona Interna 30 - 55
Sensor Di Angolo 30 - 75
Sollevamento Bracci 30 - 70

Asse Anteriore

Assale Anteriore
Frizione 60 - 45
Assale Anteriore 4 Ruedas Motriz
Supporto 60 - 25
Assale Anteriore 4 Ruote Motrici 60 - 75
Carcassa 60 - 75
Comando Bloccaggio Differenziale 60 - 35
Differenziale 60 - 90
Riduzione Finale 60 - 100
Blocco Valvole Idraulico 60 - 110
Riparo E Albero Trasmissione 60 - 40
Telaio Pesante E Perno Di Rimorchio 60 - 5
Zavorra Ventrale 60 - 20

Attacco

Alimentazione Cilindro Di Sollevatore 40 - 15
Attacco 40 - 95
Attacco Anteriore
Idraulico 40 - 100
Attacco Anteriore 50000n 40 - 115
Barra Inferiori Con Gancio 40 - 45
Barra Inferiori Con Rotula 40 - 50
Barra Trazione Orientabile 40 - 65
Cerrojo Barra Superior 40 - 35
Cilindro Di Sollevatore 40 - 5
Maglia Superior Con Ganci 40 - 25

PAGE

Maglia Superior Con Snodo Sferico 40 - 30
Presa 40 - 40
Scatola Livello 40 - 20
Stabilizzatore Suola 40 - 60
Stabilizzatore Tubo 40 - 55
Support De Barra Oscillante 40 - 80

Cabina Trattore

Aria Condizionata 110 - 115
Tubo 110 - 115
Cabina
Leggera 110 - 65
Cabina Trattore 110 - 90
Isolante Cabina 110 - 90
Parafango 110 - 100
Centralina Di Comando Cabina Sospesa 110 - 15
Cintura Sicurezza 110 - 240
Comando De Riscaldamento 110 - 145
Comando Finestra Laterale 110 - 50
Comando Portello Posteriore 110 - 55
Filtro Di Cabina 110 - 140
Lavacristallo 110 - 155
Montaggio Cabina 110 - 10
Con Sospensione 110 - 10
Porta 110 - 40
Presa Di Corrente & Accedisigari 110 - 175
Radio Installazione 110 - 170
Retrovisore 110 - 195
Retrovisore A Comando Elettrico 110 - 200
Retrovisore Interior 110 - 190
Sedile 110 - 205
Sedile Secondario 110 - 245
Tergicristallo Anteriore 110 - 150
Tergicristallo Parte Posteriore 110 - 160
Tetto 110 - 60
Tettuccio 110 - 165
Vestire Cruscotto 110 - 85
Vetro 110 - 45

Carrozzeria

Carrozzeria

INDICE ALFABETICO

C14

	PAGE
Armatura Cofano	100 - 20
Cofano	100 - 15
Griglia	100 - 5
Decalcomanie	
Sicurezza	100 - 35
Emblemi	100 - 30
Letteratura	100 - 50
Pedana	100 - 25
Cerchioni & Masse Di Ruote	
Assale Anteriore 4 Ruote Motrici	
Parafanghi E Supporto	130 - 20
Contrappesi Per Ruote	130 - 65
Ruote Anteriori	
4 Ruote Motrici	130 - 5
Ruote Posteriori	130 - 60
Montaggio Con Cono	130 - 60
Equipaggiamento Elettronica	
Cavi De Assale Anteriore Sospeso / Scatola Controllo	90 - 60
Cavi Scatola Controllo E Commando De La Cabina	90 - 70
Cavo Principale De Transmissione	90 - 85
Equipaggiamento Elettronico	
Senori	90 - 95
Fascio Mensola Latarale	
Cabina	90 - 80
Fasciocavi "Isobus"	90 - 50
Fieldstar	90 - 55
Panello Computer I Placa Equipaggiamento Illuminazione	90 - 25
Radar	90 - 40
Scatola Controllo	
Cabina	90 - 65
Sollevatore Elettronico	
Cavi Principali	90 - 5
Pannello	90 - 20
Frizione	
Comando Della Frizione	20 - 20
Distanziale Anteriore	20 - 5
Volano & Carcassa Volano	20 - 15

	PAGE
Idraulico	
Blocco Valvole Idraulico	70 - 100
Filtro A Pressione	70 - 100
Tubazioni	70 - 115
Valvolasolenoide	70 - 110
Circuito Idraulico	
Trasmissione	70 - 90
Comandi Con 5-6 Distributors Eletttro-Idraulico	
Modulo Fingertip	70 - 250
Comando Illuminazione E Sotto Coppia	70 - 15
Comando Pompa	70 - 65
Distributore Auxiliarie	70 - 200
Freni	
Tubi Idraulica	70 - 45
Freno Idraulico	70 - 60
Giunto Idraulico	70 - 225
Idraulica Ausiliare	70 - 125
Intallazione Distributori Ausiliari	70 - 185
Lubrificazione Cambio Di Velocità	70 - 85
Interni	70 - 85
Pedali Freni	70 - 40
Pompa Alimentazione	
Comandi Conforto	70 - 75
Pompa Di Sterzo	70 - 20
Pompa Idraulica	70 - 175
Pompa Per Lubrificazione	
Filtro	70 - 70
Radiatore Olio	70 - 120
Recupero D'Olio	70 - 245
Ripartitore Di Idraulica	70 - 155
Suporti Pedale	70 - 35
Tubazioni Idrauliche Di Sospensione Anteriore	70 - 30
Tubazioni Idrauliche Di Sterzo	70 - 25
Valvola Di Freno	70 - 55
Volante E Colonna Telescopico	70 - 5
Illuminazione	
Attrezzatura Segnaletica	120 - 35
Equipaggiamento Illuminazione	
Frontale	120 - 5

INDICE ALFABETICO

C15

	PAGE
Posteriore	**120 - 40**
Luce Illuminazione Campo	**120 - 25**
Luce Rotativa	**120 - 50**
Impianto Elettrico & Cruscotto	
Commando Esterno Sopra Il Parafangos	**80 - 20**
Cruscotto & Strumenti	**80 - 5**
Fasciacavi Di Luce Illuminazione Campo	**80 - 85**
Fasciocavi Anteriore Di Illuminazione	**80 - 55**
Fasciocavi Cruscotto	**80 - 35**
Bracciolo	**80 - 35**
Fasciocavi Di Condizionatore Di Aria Automatico E Sensori	**80 - 90**
Fasciocavi Di Montante	**80 - 50**
Fasciocavi Di Motore	**80 - 25**
Fasciocavi Di Tetto	**80 - 45**
Fasciocavi Posteriore Di Illuminazione	**80 - 65**
Impianto Elettrico & Cruscotto	**80 - 10**
Interrupttores De La Pannello Laterale	**80 - 15**
Placa Porta Rele & Fusibile	**80 - 40**
Presaellectric Di Rimorchio	**80 - 75**
Motore & Equipaggiamento	
Albero Motore, Stantuffo & Bielli	**10 - 35**
Alternatore	**10 - 15**
Alternatore Cone Soporte	**10 - 10**
Batteria A Cavo	**10 - 155**
Blocco Cilindri	**10 - 25**
Carter D'Olio	**10 - 55**
Carter Di Distribuzione	**10 - 30**
Comandi Acceleratore	**10 - 230**
Compressore	**10 - 175**
Coperchio Testata	**10 - 50**
Filtro D'Aria	
Doppio Elemento	**10 - 195**
Filtro Olio Centrifugo	**10 - 125**
Gestion Motore Elettronico	**10 - 100**
Kits Riparazione Motore	
Pistoni E Testata Con Valvole	**10 - 105**
Motore & Equipaggiamento	**10 - 5**
Motorino Di Avviamento	**10 - 20**

	PAGE
Pompa Ad Acqua	**10 - 65**
Raffreddamento D'Aria	**10 - 190**
Raffreddamento Olio E Filtro	**10 - 60**
Riscaldatore Motore	**10 - 115**
Scarico Verticale Lateral	**10 - 210**
Serbatoio Addizionale	**10 - 140**
Serbatoio Nafta E Fissaggio	**10 - 135**
Serie Guarnizioni Motore	**10 - 110**
Sistema D'Iniezione	**10 - 70**
Sistema Di Aspirazione & Scarico	**10 - 80**
Sistema Di Raffreddamento Motore	**10 - 180**
Sistema Di Riscaldamento Parte Motore	**10 - 130**
Sistema Nafta A Bassa Pressione	**10 - 75**
Sistema Raffreddamento Installazione Aria Condizionata	**10 - 170**
Tendicinghia	**10 - 95**
Testata	**10 - 45**
Tubazioni A Nafta	**10 - 145**
Tubazioni Nafta	**10 - 150**
Turbocompressore Tubo	**10 - 85**
Valvole E Albero A Camme	**10 - 40**
Transmissione	
Albero Di Accumulo	**25 - 30**
Albero Di Pompa	**25 - 25**
Bracciolo Di Comando	**25 - 95**
Cambio Di Gruppo	**25 - 75**
Comando Trasmissione	**25 - 80**
Commando Di Emergenza - Cavo	**25 - 80**
Commando Di Emergenza - Gruppo	**25 - 85**
Modulo Fingertip Per Distributore A Comando Eletttro-Idraulico	**25 - 105**
Motore Idraulico	**25 - 40**
Piastra Comando Idraulico	**25 - 45**
Pompa Idraulica	**25 - 35**
Regolazione	**25 - 50**
Riduttore Planetario	**25 - 20**

PAGE

Scatola Interna 25 - 15
Trasmissione 25 - 5
Carcassa 25 - 5

Transmissione Presa Di Potenza
Difesa
Presa Di Forza 50 - 30
Frizione Pto Indipendente 50 - 5
Presa Di Forza Indipendente
Cilindro 50 - 20
Flangia - Briglia 50 - 15
Tubatura 50 - 25

PAGE

INDICE ALFABETICO

C17

PAGE

Cabina Tractor

- Aire Acondicionado 110 - 115
  - Flexible 110 - 115
- Asiento 110 - 205
- Cabina De Tractor
  - Revestimiento 110 - 65
- Cabina Tractor 110 - 90
  - Aislamiento 110 - 90
  - Guardabarros 110 - 100
- Caja De Mando Cabina Suspendida 110 - 15
- Cinturon De Seguridad 110 - 240
- Cristal 110 - 45
- Dosel 110 - 165
- Enchufe & Encendor De Cigarillos 110 - 175
- Filtro De Cabina 110 - 140
- Lavaparabrisas 110 - 155
- Limpiaparabrisas Parte Trasera 110 - 160
- Mando De Calefaccoin 110 - 145
- Mecanismo De Ventana Lateral 110 - 50
- Mecanismo De Ventana Trasera 110 - 55
- Monturas De Cabina 110 - 10
  - Con Suspension 110 - 10
- Puerta 110 - 40
- Radio Instalacion 110 - 170
- Retrovisor 110 - 195
- Retrovisor Con Mando Electrico 110 - 200
- Retrovisor Interior 110 - 190
- Tejado 110 - 60
- Varillaje De Limpiaparabrisas Delantero 110 - 150
- Vestir Tablero De Instrumentos 110 - 85

Carroceria

- Calcomanias
  - Seguridad 100 - 35
- Emblemas 100 - 30
- Emplanchados
  - Armadura Capo 100 - 20
  - Capo 100 - 15
  - Griglia 100 - 5
- Estribos 100 - 25

PAGE

- Literatura 100 - 50

Eje Delantero

- Bastidor Para Pesas Y Perno De Remolque 60 - 5
- Bloque Valvulas Hydraulico 60 - 110
- Defensa Y Arbol De Transmision 60 - 40
- Doble Traccion De Eje Frontal
  - Mecanismo Bloqueo Diferencial 60 - 35
- Eje Delantero 4 Ruedas Motrices 60 - 100
  - Accionamiento Final 60 - 100
  - Carter 60 - 75
  - Diferencial 60 - 90
  - Embrague 60 - 45
- Eje Delantero 4 Ruedas Motriz
  - Soporte 60 - 25
- Pesa Central 60 - 20

Eje Trasero

- Brazos Elevador 30 - 70
- Cajas De Eje Trasero
  - Pinon Interior De Mando Final 30 - 55
- Captador De Angulo 30 - 75
- Carter De Husillo De Rueda 30 - 30
- Differencial 30 - 40
- Disco De Freno 30 - 60
- Freno Cardan 30 - 65
- Freno De Mano 30 - 5
- Indicador Nivel De Aceite 30 - 35
- Rueda Conica 30 - 45

Embrague

- Espaciador Delantero 20 - 5
- Mando Del Embrague 20 - 20
- Volante & Carter Del Volante 20 - 15

Enganche

- Alimentacion Gato Hidraulico 40 - 15
- Barra De Tiro Oscilante 40 - 65
- Barra Enganche Con Bola 40 - 30
- Barra Enganche Con Gancho 40 - 25
- Barras Inferiores Con Gancho 40 - 45

INDICE ALFABETICO

C18

	PAGE
Barras Inferiores Con Perno Enganche	40 - 50
Caja Niveladora	40 - 20
Chiavistello Barra Superior	40 - 35
Enganche	40 - 95
Enganche Delantero	
Hydraulico	40 - 100
Enganche Delantero 50000n	40 - 115
Estabilizador A Zapata	40 - 60
Estabilizador Tubo	40 - 55
Gato Hidraulico	40 - 5
Support De Barra De Tiro	40 - 80
Toma	40 - 40
Equipo electronica	
Caja De Control	
Cabina	90 - 65
Computador A Bordo Y Placa Equipo Alumbrado	90 - 25
Equipo Electronico	
Sensores	90 - 95
Fieldstar	90 - 55
Haz De Hilos "Isobus"	90 - 50
Levante Electronico	
Consola	90 - 20
Levante Hidraulico	
Arnes Principal	90 - 5
Mazo Cables Caja De Control Y Mando Del Cabina	90 - 70
Mazo Cables Consola Lateral	
Cabina	90 - 80
Mazo Cables De Eje Delantero Suspendido / Caja De Cont	
Rol	90 - 60
Mazo Cables Principale Ttransmission	90 - 85
Radar	90 - 40
Hidraulico	
Acoplador Hidraulico	70 - 225
Bloque Valvulas Hydraulico	70 - 115
Circuito	70 - 115
Filtro Presion	70 - 100
Valvula Solenoid	70 - 110
Bomba Alimentadora	
Comando De Comodidad	70 - 75
Bomba De Aceite Lubrificacion	
Filtro	70 - 70
Bomba Direccion	70 - 20
Bomba Hidraulica	70 - 175
Circuito Hidraulico	
Transmision	70 - 90
Distribuidor Auxiliar	70 - 200
Enfriador El Aciete	70 - 120
Freno Hidraulica	70 - 60
Frenos	
Tubos Hidraulica	70 - 45
Instalacion Distribuidores Auxiliares	70 - 185
Instalacion Hidraulica De Direccion	70 - 25
Instalacion Hidraulica Del Suspension Delantero	70 - 30
Lubrificacion Cambio De Velocidades	70 - 85
Internas	70 - 85
Mando Alumbrado Y Inversor Sub Par	70 - 15
Mando Con 5-6 Distribuidors Electro-Hydraulico	
Modulo Fingertip	70 - 250
Mando De Bomba	70 - 65
Pedals Del Freno	70 - 40
Recuperacion Del Aceite	70 - 245
Sistema Hidraulico Auxiliar	70 - 125
Soportes Pedales	70 - 35
Valvula De Freno	70 - 55
Valvula Distribuidora De Hidraulica	70 - 155
Volante Direccion Y Columna Telescopico	70 - 5
Iluminación	
Equipamiento Indicacion	120 - 35
Equipo Alumbrado	
Frontal	120 - 5
Trasera	120 - 40
Luces De Campo	120 - 25
Luz Giratoria	120 - 50
Instalacion Electrica & Tablero De Instrumentos	
Equipo Electrico & Tablero De Instrumentos	80 - 10
Haz De Hilos De Montante	80 - 50

INDICE ALFABETICO

C19

	PAGE
Haz De Hilos De Motor	80 - 25
Haz De Hilos De Techo	80 - 45
Haz De Hilos Del Acondicionator De Aire Automatico Y Sensores	80 - 90
Haz De Hilos Del Luces De Campo	80 - 85
Haz De Hilos Delantero De Iluminacion	80 - 55
Haz De Hilos Trasero De Iluminacion	80 - 65
Haz Tablero De Instrumentos	80 - 35
Reposa Brazos	80 - 35
Interruptores Del Consola Lateral	80 - 15
Mando Externo Sobre El Guadabarros	80 - 20
Placa Porta Rele & Fusibile	80 - 40
Tablero De Instrumentos & Indicapores	80 - 5
Tomacorriente De Remolque	80 - 75

Llantas & Masas De Ruedas

Doble Traccion De Eje Frontal Guardabarros Y Soporte	130 - 20
Pesos De Rueda	130 - 65
Ruedas Delanteras 4 Ruedas Motrices	130 - 5
Ruedas Traseras	130 - 60
Fijacion Con Cono	130 - 60

Motor & Herramental

Admision & Escape	10 - 80
Alternador	10 - 15
Alternador Y Support	10 - 10
Arranque	10 - 20
Batterie Y Cable	10 - 155
Bloque De Cilindro	10 - 25
Bomba De Agua	10 - 65
Caja Supplementario	10 - 140
Calentador Motor	10 - 115
Carter De Aceite	10 - 55
Carter De La Distribucion	10 - 30
Ciguenal, Piston & Bielas	10 - 35
Compresor	10 - 175
Conducciones A Combustible	10 - 145
Culata	10 - 45
Deposito Combustible Sujecciones	10 - 135

	PAGE
Enfriador De Aire	10 - 190
Escape Vertical Lano Lateral	10 - 210
Filtro Aceite Centrifugo	10 - 125
Filtro De Aire Elemento Doble Seco	10 - 195
Gestione Motor Electronico	10 - 100
Jeugos De Empaquetaduras De Motor	10 - 110
Jeugos De Reparacion De Motor Pistones-Culata Con Valvulas	10 - 105
Mandos Acelerador	10 - 230
Mecanismo Valv. Y Arbol De Levas	10 - 40
Motor & Herramental	10 - 5
Refrigerador Y Filtro De Aceite	10 - 60
Sistema Combustible	10 - 150
Sistema De Calefaccion De Cabina Pieza De Motor	10 - 130
Sistema De Combustible A Baja Presion	10 - 75
Sistema De Inyeccion	10 - 70
Sistema De Refrigeracion Instalacion Con Aire Acondicionad	10 - 170
Sistema Refrigeracion Motor	10 - 180
Tapa Culata	10 - 50
Tensor De Correa	10 - 95
Turbo-Soplador Tubos	10 - 85

Transmision Toma De Fuerza

Embrague De Toma De Fuerza Independiente	50 - 5
Proteccion Toma De Fuerza	50 - 30
Toma De Fuerza Independiente	
Cilindro	50 - 20
Pletina - Brida	50 - 15
Tuberias	50 - 25

Transmisión

Bomba Hidraulica	25 - 35
Caja Del Velocidades	25 - 10
Cambio De Grupo	25 - 75

INDICE ALFABETICO

C20

	PAGE
Carter Interior	**25 - 15**
Control De Transmision	**25 - 85**
Accionamento De Emergencia - Gama	**25 - 85**
Accionamento Emergencia - Cable	**25 - 80**
Dispositivo Ajustable	**25 - 50**
Eje De Bomba	**25 - 25**
Eje Sumatorio	**25 - 30**
Modulo Fingertip Para Distribuidor A Mando Electro-Hydraulico	**25 - 105**
Motor Hidraulico	**25 - 40**
Placa Del Conducto	**25 - 45**
Reposa Brazos De Control	**25 - 95**
Transmision	
Caja	**25 - 5**
Transmision Planetaria	**25 - 20**

PAGE

RESERVED

RECOMMENDED STOCKING PARTS

D1

		Qty	PAGE
AIR FITR.ELEMENT	4270018M1	1	10- 205
AIR FITR.ELEMENT	4278631M1	1	10- 205
ALTERNATOR	3789983M91	1	10- 15
		1	10- 10
BEARING	833059M1	1	20- 15
BELT	4273269M1	1	10- 170
BELT	4285103M1	1	10- 5
BELT	4288688M1	1	10- 5
BLINKER	4271989M1	1	80- 40
BLINKER	4271990M1	1	80- 40
BULB	3907077M1	1	120- 30
BULB	3907384M1	1	120- 30
BULB	CH175-1323	3	120- 5
		3	120- 10
BULB	CH9X-8118	1	120- 50
BULB 12V 1.2W	3302213M1	1	110- 175
		1	110- 185
		1	110- 180
BULB 12V 1.2W	3405185M1	1	80- 15
BULB 12V 10W	3385821M1	1	80- 45
BULB 12V 21W	621235M1	1	120- 15
		1	120- 45
BULB 12V 5W	1420037M1	1	120- 15
BULB 12V 5W	3907271M1	1	80- 45
BULB 12V 60/55W	3713341M1	1	120- 25
		1	120- 30
BULB H/L 45/40W	961866M1	1	120- 10
BULB H3	1628494M1	2	120- 25
		1	120- 25
		1	120- 30
		2	120- 30
BULB S/L 21/5W	908543M1	1	120- 45
CAB FILTER	3786649M3	1	110- 140
CIRCLIP	X530106046000	1	70- 65
CLEVIS PIN	G916501120050	1	40- 70
DIODE	3907284M1	1	110- 145
DIODE	4274355M2	1	80- 25
DIRECTIONAL VALV	G312100600110	2	70- 105
DIRECTIONAL VALV	G411151600020	4	70- 110
DISCHARGE VALVE	G716100600122	1	70- 105
ELECTRICAL PLUG	G205900900020	1	110- 185
ELECTROVALVE	3903960M1	1	70- 220
ELEMENT	V836855484	1	10- 60
FEMALE COUPLER	3785907M2	2	40- 110
FEMALE COUPLER	3786820M2	1	70- 140
FILTER	3712495M1	1	10- 170
FILTER	F916100490010	1	70- 70
FILTER ELEMENT	4276648M1	1	70- 125
FILTER ELEMENT	F916100600010	1	70- 100

		Qty	PAGE
FUEL ELEMENT	V836867231	1	10- 75
FUEL ELEMENT	V836867233	1	10- 75
FUSE	3387322M1	1	110- 215
		X	80- 40
FUSE	3580868M1	1	10- 165
		X	80- 40
FUSE	3712661M1	X	80- 40
FUSE	3780003M1	X	80- 40
FUSE	3789732M1	1	80- 25
FUSE	4271799M1	X	80- 40
		3	80- 25
FUSE	4271800M1	1	120- 50
		X	80- 40
FUSE	4271801M1	X	80- 40
		1	80- 30
		2	80- 25
		1	120- 50
FUSE	4271802M1	2	80- 25
		X	80- 40
FUSE	4271803M1	1	80- 40
		1	90- 50
FUSE	4271842M1	1	80- 30
		X	80- 40
FUSE	4276186M1	1	10- 160
		1	10- 165
		1	10- 155
GASKET	V615882227	3	10- 65
GASKET	V836362229	1	10- 125
GASKET	V836840992	1	10- 90
GASKET	V837067881	4	10- 50
HALL SENSOR	G816970020040	2	90- 95
		1	20- 10
HEADLAMP	3713798M91	2	120- 10
HEADLAMP	3713799M91	2	120- 10
HOSE	3713676M1	1	10- 185
IGNITION KEY	4271358M1	1	80- 10
INDICATOR	3789379M1	1	70- 125
INDUCTIVE SENSOR	3618249M1	1	70- 125
INDUCTIVE SENSOR	3716981M1	2	40- 40
KIT, FILTER	G001990100010	1	70- 220
KIT, JOINT	3903317M91	1	40- 115
KIT, ROTOR ASSY.	V836362228	1	10- 125
KIT, SPANNER	3902584M91	1	110- 40
LENS	136-5254	1	120- 50
NON RETURN VALVE	3808023M91	1	10- 135
NUT	920700180080	24	130- 55

		Qty	PAGE
NUT SPECIAL	3712611M2	24	130- 15
		24	130- 10
		20	130- 60
		20	130- 5
O RING	3008359X1	2	60- 65
		2	60- 40
		2	60- 70
O RING	3010471X1	4	10- 170
		1	110- 115
O RING	365392X1	1	70- 150
O RING	3907428M1	1	70- 125
O RING	V614601924	1	10- 30
O RING	X548960666000	1	70- 100
O RING	X548987066000	1	70- 70
O RING	X548989201000	1	70- 70
OIL FILTER	V836862582	1	10- 105
OIL FILTER	V836867234	1	10- 60
PIN	3011024X1	1	40- 35
PIN HITCH	3387270M92	1	60- 5
PIN HITCH	4272346M2	1	40- 65
PLATE	202-9223	2	60- 5
PLUG	V836655493	1	10- 55
POSITION SENSOR	3797129M1	1	70- 250
POTENTIOMETER	4274087M1	1	25- 95
PRESS.TRANSDUCER	G718970020021	1	90- 95
PRESSURE INTAKE	3785665M1	3	70- 155
		4	70- 155
PRESSURE SWITCH	3712526M1	1	10- 170
PRESSURE SWITCH	4278368M1	1	70- 155
		1	70- 160
		2	70- 165
PRESSURE SWITCH	G716970160030	1	90- 65
		1	25- 85
		1	90- 80
PRESSURE SWITCH	V837070209	1	10- 100
RAM	3902121M4	1	110- 40
RELAY	3387326M2	1	80- 40
RELAY	3615652M1	2	80- 90
RELAY	3779879M1	2	80- 25
RELAY	4270844M1	X	80- 40
		1	80- 10
RELAY	4271991M1	1	80- 40
RELAY	4272431M1	1	120- 50
		1	80- 30
		X	80- 40
		4	80- 25
RELAY	4272432M1	X	80- 40
RING	X540004078000	1	90- 95

		Qty	PAGE
RING	X540009478000	1	20- 10
		4	30- 55
SCREW	920700180070	24	130- 55
SEAL	V615881827	2	10- 55
SENSOR	G716861100020	1	30- 75
SENSOR	G916970020014	1	90- 95
SENSOR	G916971020033	1	25- 75
SENSOR	V836666980	1	10- 100
SENSOR	V836667732	2	10- 100
SENSOR	V837069410	1	10- 100
SENSOR	V837070201	1	10- 100
SHOCK ABSORBER	4273315M91	2	110- 10
SOLENOID	7302601101	2	60- 110
SOLENOID	V837069047	1	10- 80
SOLENOID SWITCH	H312900150010	2	70- 40
		1	30- 15
		1	30- 5
SOLENOID VALVE	G916100600142	1	70- 105
SPEED SENSOR	V837069150	1	10- 100
SPEED SENSOR	V837070189	1	10- 100
STRAINER	3787655M2	1	70- 180
STUD	3716105M2	20	130- 60
SUCTION FILTER	G916951010010	1	70- 170
SWITCH	F916100600040	1	70- 100
SWITCH,INDIRECT	3714137M1	1	40- 120
SWITCH,INDIRECT	3714138M1	1	40- 120
SWITCH,INDIRECT	3780395M2	1	80- 45
SWITCH,INDIRECT	3783832M2	1	20- 20
SWITCH,INDIRECT	4270970M3	1	25- 100
SWITCH,INDIRECT	4271342M1	1	80- 10
SWITCH,INDIRECT	4271343M1	1	80- 10
SWITCH,INDIRECT	4271344M1	1	110- 160
SWITCH,INDIRECT	4271346M1	1	80- 15
SWITCH,INDIRECT	4271347M1	1	80- 15
SWITCH,INDIRECT	4271348M2	1	80- 15
SWITCH,INDIRECT	4271349M2	1	80- 15
SWITCH,INDIRECT	4271350M1	1	80- 15
SWITCH,INDIRECT	4271351M2	1	80- 15
SWITCH,INDIRECT	4271809M1	1	20- 20
SWITCH,INDIRECT	4271916M2	1	80- 10
SWITCH,INDIRECT	4272778M1	1	20- 20
SWITCH,INDIRECT	4284627M2	2	80- 20
SWITCH,INDIRECT	4284628M2	2	80- 20
SWITCH,INDIRECT	4291981M1	1	80- 15
SWITCH,INDIRECT	4291982M1	1	25- 100
TEMP. SENSOR	H312100360030	1	90- 95
THERMOSTAT	V836015156	1	10- 65
THERMOSTAT	V836331590	1	10- 65
TOGGLE	3042427M1	2	40- 45

RECOMMENDED STOCKING PARTS

D2

		Qty	PAGE
TOGGLE	3042428M1	2	40- 45
TOGGLE	3042430M1	2	40- 115
		2	40- 45
TOGGLE	3042433M1	1	40- 25
TOGGLE	3778880M1	4	100- 15
TOGGLE	3783029M1	1	40- 115
TOGGLE	3783030M1	1	40- 115
TOGGLE	4303393M1	1	40- 25
TOGGLE	4303395M1	2	40- 45
		2	40- 115
TRANSDUCER	3784361M1	1	40- 120
		1	20- 20
		1	10- 235
TRANSDUCER	4275671M2	1	70- 45
VALVE	G716150200060	1	70- 110
WEIGHT	202-9220	10	60- 5
WIPER BLADE	4275049M1	1	110- 160
WIPER BLADE	4275053M1	1	110- 150

Qty PAGE

Qty PAGE

Qty PAGE

PIECES DONT LE STOCKAGE EST RECOMMANDE

D3

		Qty	PAGE
ALTERNATEUR	3789983M91	1	10- 15
		1	10- 10
AMORTISSEUR CHOC	4273315M91	2	110- 10
AMP H4 60/55 W	3713341M1	1	120- 30
		1	120- 25
AMPOULE	3907077M1	1	120- 30
AMPOULE	3907384M1	1	120- 30
AMPOULE	CH175-1323	3	120- 5
		3	120- 10
AMPOULE	CH9X-8118	1	120- 50
AMPOULE 12V 1.2W	3302213M1	1	110- 185
		1	110- 175
		1	110- 180
AMPOULE 12V 1.2W	3405185M1	1	80- 15
AMPOULE 12V 10W	3385821M1	1	80- 45
AMPOULE 12V 21W	621235M1	1	120- 45
		1	120- 15
AMPOULE 12V 5W	1420037M1	1	120- 15
AMPOULE 12V 5W	3907271M1	1	80- 45
AMPOULE 21/5W	908543M1	1	120- 45
AMPOULE 45/40W	961866M1	1	120- 10
AMPOULE H3	1628494M1	1	120- 30
		2	120- 25
		2	120- 30
		1	120- 25
ANNEAU	X540004078000	1	90- 95
ANNEAU	X540009478000	4	30- 55
		1	20- 10
AXE	G916501120050	1	40- 70
BALAI ESSUIE GL	4275049M1	1	110- 160
BALAI ESSUIE GL	4275053M1	1	110- 150
BOUCHON	V836655493	1	10- 55
BROCHE	3387270M92	1	60- 5
BROCHE	4272346M2	1	40- 65
CAPTEUR	3784361M1	1	20- 20
		1	40- 120
		1	10- 235
CAPTEUR	4275671M2	1	70- 45
CAPTEUR DE HALL	G816970020040	1	20- 10
		2	90- 95
CAPTEUR INDUCTIF	3618249M1	1	70- 125
CAPTEUR INDUCTIF	3716981M1	2	40- 40
CAPTEUR POSITION	3797129M1	1	70- 250
CAPTEUR PRESSION	G718970020021	1	90- 95
CAPTEUR VITESSE	V837069150	1	10- 100
CAPTEUR VITESSE	V837070189	1	10- 100
CENTRALE CLIGNOT	4271989M1	1	80- 40
CENTRALE CLIGNOT	4271990M1	1	80- 40
CIRCLIP	X530106046000	1	70- 65
CLAPET	3808023M91	1	10- 135
CLE DE CONTACT	4271358M1	1	80- 10
CONTACTEUR	3714137M1	1	40- 120
CONTACTEUR	3714138M1	1	40- 120
CONTACTEUR	3780395M2	1	80- 45
CONTACTEUR	3783832M2	1	20- 20
CONTACTEUR	4270970M3	1	25- 100
CONTACTEUR	4271342M1	1	80- 10
CONTACTEUR	4271343M1	1	80- 10
CONTACTEUR	4271344M1	1	110- 160
CONTACTEUR	4271346M1	1	80- 15
CONTACTEUR	4271347M1	1	80- 15
CONTACTEUR	4271348M2	1	80- 15
CONTACTEUR	4271349M2	1	80- 15
CONTACTEUR	4271350M1	1	80- 15
CONTACTEUR	4271351M2	1	80- 15
CONTACTEUR	4271809M1	1	20- 20
CONTACTEUR	4271916M2	1	80- 10
CONTACTEUR	4272778M1	1	20- 20
CONTACTEUR	4284627M2	2	80- 20
CONTACTEUR	4284628M2	2	80- 20
CONTACTEUR	4291981M1	1	80- 15
CONTACTEUR	4291982M1	1	25- 100
COUPLEUR FEMELLE	3785907M2	2	40- 110
COUPLEUR FEMELLE	3786820M2	1	70- 140
COURROIE	4273269M1	1	10- 170
COURROIE	4285103M1	1	10- 5
COURROIE	4288688M1	1	10- 5
COUSSINET	833059M1	1	20- 15
CREPINE	3787655M2	1	70- 180
DETECTEUR	G716861100020	1	30- 75
DETECTEUR	G916970020014	1	90- 95
DETECTEUR	G916971020033	1	25- 75
DETECTEUR	V836666980	1	10- 100
DETECTEUR	V836667732	2	10- 100
DETECTEUR	V837069410	1	10- 100
DETECTEUR	V837070201	1	10- 100
DIODE	3907284M1	1	110- 145
DIODE	4274355M2	1	80- 25
DURITE	3713676M1	1	10- 185
ECROU	920700180080	24	130- 55
ECROU SPECIAL	3712611M2	24	130- 10
		24	130- 15
		20	130- 5
		20	130- 60
ELECTROVANNE	3903960M1	1	70- 220
ELEMENT	V836855484	1	10- 60
ELEMENT FILTRANT	4276648M1	1	70- 125
ELEMENT FILTRANT	F916100600010	1	70- 100
ELEMENTCARBURANT	V836867231	1	10- 75
ELEMENTCARBURANT	V836867233	1	10- 75
ELEMENTFILTREAIR	4270018M1	1	10- 205
ELEMENTFILTREAIR	4278631M1	1	10- 205
FILTRE	3712495M1	1	10- 170
FILTRE	F916100490010	1	70- 70
FILTRE ASPIRATIO	G916951010010	1	70- 170
FILTRE CABINE	3786649M3	1	110- 140
FILTRE HUILE	V836862582	1	10- 105
FILTRE HUILE	V836867234	1	10- 60
FUSIBLE	3387322M1	1	110- 215
		X	80- 40
FUSIBLE	3580868M1	X	80- 40
		1	10- 165
FUSIBLE	3712661M1	X	80- 40
FUSIBLE	3780003M1	X	80- 40
FUSIBLE	3789732M1	1	80- 25
FUSIBLE	4271799M1	X	80- 40
		3	80- 25
FUSIBLE	4271800M1	1	120- 50
		X	80- 40
FUSIBLE	4271801M1	X	80- 40
		2	80- 25
		1	80- 30
		1	120- 50
FUSIBLE	4271802M1	2	80- 25
		X	80- 40
FUSIBLE	4271803M1	1	80- 40
		1	90- 50
FUSIBLE	4271842M1	X	80- 40
		1	80- 30
FUSIBLE	4276186M1	1	10- 155
		1	10- 160
		1	10- 165
GOUJON	3716105M2	20	130- 60
GOUPILLE	3011024X1	1	40- 35
INDICATEUR	3789379M1	1	70- 125
INTERRUPTEUR	F916100600040	1	70- 100
JEU CLES	3902584M91	1	110- 40
JEU FILTRE	G001990100010	1	70- 220
JEU JOINTS	3903317M91	1	40- 115
JEU ROTOR	V836362228	1	10- 125
JOINT	V615882227	3	10- 65
JOINT	V836362229	1	10- 125
JOINT	V836840992	1	10- 90
JOINT	V837067881	4	10- 50
JOINT ETANCHEITE	V615881827	2	10- 55
JOINT TORIQUE	3008359X1	2	60- 70
		2	60- 65
		2	60- 40
JOINT TORIQUE	3010471X1	4	10- 170
		1	110- 115
JOINT TORIQUE	365392X1	1	70- 150
JOINT TORIQUE	3907428M1	1	70- 125
JOINT TORIQUE	V614601924	1	10- 30
JOINT TORIQUE	X548960666000	1	70- 100
JOINT TORIQUE	X548987066000	1	70- 70
JOINT TORIQUE	X548989201000	1	70- 70
LENTILLE	136-5254	1	120- 50
MANO CONTACT	3712526M1	1	10- 170
MANO CONTACT	4278368M1	2	70- 165
		1	70- 160
		1	70- 155
MANO CONTACT	G716970160030	1	90- 65
		1	90- 80
		1	25- 85
MANO CONTACT	V837070209	1	10- 100
MASSE	202-9220	10	60- 5
PHARE AVANT	3713798M91	2	120- 10
PHARE AVANT	3713799M91	2	120- 10
PLAQUE	202-9223	2	60- 5
POTENTIOMETRE	4274087M1	1	25- 95
PRISE ELECT MALE	G205900900020	1	110- 185
PRISE PRESSION	3785665M1	4	70- 155
		3	70- 155
RELAIS	3387326M2	1	80- 40
RELAIS	3615652M1	2	80- 90
RELAIS	3779879M1	2	80- 25
RELAIS	4270844M1	X	80- 40
		1	80- 10
RELAIS	4271991M1	1	80- 40
RELAIS	4272431M1	1	80- 30
		1	120- 50
		X	80- 40
		4	80- 25
RELAIS	4272432M1	X	80- 40
RELAIS SOLENOIDE	H312900150010	1	30- 5
		2	70- 40
		1	30- 15
ROTULE	3042427M1	2	40- 45
ROTULE	3042428M1	2	40- 45
ROTULE	3042430M1	2	40- 45
		2	40- 115
ROTULE	3042433M1	1	40- 25
ROTULE	3778880M1	4	100- 15
ROTULE	3783029M1	1	40- 115

PIECES DONT LE STOCKAGE EST RECOMMANDE

D4

		Qty	PAGE
ROTULE	3783030M1	1	40- 115
ROTULE	4303393M1	1	40- 25
ROTULE	4303395M1	2	40- 45
		2	40- 115
SOLENOIDE	7302601101	2	60- 110
SOLENOIDE	V837069047	1	10- 80
SONDE TEMPERATUR	H312100360030	1	90- 95
SOUPAPE	G716150200060	1	70- 110
THERMOSTAT	V836015156	1	10- 65
THERMOSTAT	V836331590	1	10- 65
VALVE DECHARGE	G716100600122	1	70- 105
VALVE SOLENOIDE	G916100600142	1	70- 105
VANNE COMMANDE	G312100600110	2	70- 105
VANNE COMMANDE	G411151600020	4	70- 110
VERIN	3902121M4	1	110- 40
VIS	920700180070	24	130- 55

LAGERVORSCHLAGSTEILE

D5

		Qty	PAGE
ANSAUGDRUCK	3785665M1	3	70- 155
		4	70- 155
ANZEIGER	3789379M1	1	70- 125
BLINKGERAET	4271989M1	1	80- 40
BLINKGERAET	4271990M1	1	80- 40
DICHTRING	V615881827	2	10- 55
DICHTUNGSSATZ	3903317M91	1	40- 115
DIODE	3907284M1	1	110- 145
DIODE	4274355M2	1	80- 25
DRUCKBEGR.VENTIL	G716100600122	1	70- 105
DRUCKGEBER	G718970020021	1	90- 95
DRUCKSCHALTER	3712526M1	1	10- 170
DRUCKSCHALTER	4278368M1	2	70- 165
		1	70- 160
		1	70- 155
DRUCKSCHALTER	G716970160030	1	90- 80
		1	25- 85
		1	90- 65
DRUCKSCHALTER	V837070209	1	10- 100
ELECTRON.VENTIL	3903960M1	1	70- 220
ELEMENT	V836855484	1	10- 60
FAHRSCHEINWERFER	3713798M91	2	120- 10
FAHRSCHEINWERFER	3713799M91	2	120- 10
FILTER	3712495M1	1	10- 170
FILTER	F916100490010	1	70- 70
FILTEREINSATZ	4276648M1	1	70- 125
FILTEREINSATZ	F916100600010	1	70- 100
FILTEREINSATZ.	V836867231	1	10- 75
FILTEREINSATZ.	V836867233	1	10- 75
FILTERSATZ	G001990100010	1	70- 220
FLACHDICHTUNG	V615882227	3	10- 65
FLACHDICHTUNG	V836362229	1	10- 125
FLACHDICHTUNG	V836840992	1	10- 90
FLACHDICHTUNG	V837067881	4	10- 50
GELENKZAPFEN	3042427M1	2	40- 45
GELENKZAPFEN	3042428M1	2	40- 45
GELENKZAPFEN	3042430M1	2	40- 115
		2	40- 45
GELENKZAPFEN	3042433M1	1	40- 25
GELENKZAPFEN	3778880M1	4	100- 15
GELENKZAPFEN	3783029M1	1	40- 115
GELENKZAPFEN	3783030M1	1	40- 115
GELENKZAPFEN	4303393M1	1	40- 25
GELENKZAPFEN	4303395M1	2	40- 45
		2	40- 115
GESCHW.SENSOR	V837069150	1	10- 100
GESCHW.SENSOR	V837070189	1	10- 100
GEWICHT	202-9220	10	60- 5

		Qty	PAGE
GLUEHL 12V 1.2W	3302213M1	1	110- 185
		1	110- 175
		1	110- 180
GLUEHL 12V 1.2W	3405185M1	1	80- 15
GLUEHL 12V 10W	3385821M1	1	80- 45
GLUEHL 12V 5W	1420037M1	1	120- 15
GLUEHL 12V 5W	3907271M1	1	80- 45
GLUEHL 12V21W	621235M1	1	120- 45
		1	120- 15
GLUEHL 12V60/55W	3713341M1	1	120- 30
		1	120- 25
GLUEHL.45/40W	961866M1	1	120- 10
GLUEHLAMPE	3907077M1	1	120- 30
GLUEHLAMPE	3907384M1	1	120- 30
GLUEHLAMPE	CH175-1323	3	120- 10
		3	120- 5
GLUEHLAMPE	CH9X-8118	1	120- 50
GLUEHLAMPE 21/5W	908543M1	1	120- 45
GLUEHLAMPE H3	1628494M1	2	120- 30
		2	120- 25
		1	120- 30
		1	120- 25
HALL-GEBER	G816970020040	2	90- 95
		1	20- 10
HYDR.ZYLINDER	3902121M4	1	110- 40
INDUKT EMPFANGER	3618249M1	1	70- 125
INDUKT EMPFANGER	3716981M1	2	40- 40
KABINE FILTER	3786649M3	1	110- 140
KONTAKTSCHALTER	3714137M1	1	40- 120
KONTAKTSCHALTER	3714138M1	1	40- 120
KONTAKTSCHALTER	3780395M2	1	80- 45
KONTAKTSCHALTER	3783832M2	1	20- 20
KONTAKTSCHALTER	4270970M3	1	25- 100
KONTAKTSCHALTER	4271342M1	1	80- 10
KONTAKTSCHALTER	4271343M1	1	80- 10
KONTAKTSCHALTER	4271344M1	1	110- 160
KONTAKTSCHALTER	4271346M1	1	80- 15
KONTAKTSCHALTER	4271347M1	1	80- 15
KONTAKTSCHALTER	4271348M2	1	80- 15
KONTAKTSCHALTER	4271349M2	1	80- 15
KONTAKTSCHALTER	4271350M1	1	80- 15
KONTAKTSCHALTER	4271351M2	1	80- 15
KONTAKTSCHALTER	4271809M1	1	20- 20
KONTAKTSCHALTER	4271916M2	1	80- 10
KONTAKTSCHALTER	4272778M1	1	20- 20
KONTAKTSCHALTER	4284627M2	2	80- 20
KONTAKTSCHALTER	4284628M2	2	80- 20
KONTAKTSCHALTER	4291981M1	1	80- 15
KONTAKTSCHALTER	4291982M1	1	25- 100

		Qty	PAGE
KUPPLST.AUSSEN	3785907M2	2	40- 110
KUPPLST.AUSSEN	3786820M2	1	70- 140
KUPPLUNGSBOLZEN	3387270M92	1	60- 5
KUPPLUNGSBOLZEN	4272346M2	1	40- 65
LAGER	833059M1	1	20- 15
LINSE	136-5254	1	120- 50
LUFTFILTEREINS	4270018M1	1	10- 205
LUFTFILTEREINS	4278631M1	1	10- 205
MAGNETSCHALTER	H312900150010	2	70- 40
		1	30- 5
		1	30- 15
MAGNETSPULE	7302601101	2	60- 110
MAGNETSPULE	V837069047	1	10- 80
MAGNETVENTIL	G916100600142	1	70- 105
MUTTER	920700180080	24	130- 55
NABENTRIEB.	3784361M1	1	40- 120
		1	10- 235
		1	20- 20
NABENTRIEB.	4275671M2	1	70- 45
O-RING	3008359X1	2	60- 70
		2	60- 40
		2	60- 65
O-RING	3010471X1	4	10- 170
		1	110- 115
O-RING	365392X1	1	70- 150
O-RING	3907428M1	1	70- 125
O-RING	V614601924	1	10- 30
O-RING	X548960666000	1	70- 100
O-RING	X548987066000	1	70- 70
O-RING	X548989201000	1	70- 70
OELFILTER	V836862582	1	10- 105
OELFILTER	V836867234	1	10- 60
PLATTE	202-9223	2	60- 5
POTENTIOMETER	4274087M1	1	25- 95
RELAIS	3387326M2	1	80- 40
RELAIS	3615652M1	2	80- 90
RELAIS	3779879M1	2	80- 25
RELAIS	4270844M1	1	80- 10
		X	80- 40
RELAIS	4271991M1	1	80- 40
RELAIS	4272431M1	4	80- 25
		1	120- 50
		1	80- 30
		X	80- 40
RELAIS	4272432M1	X	80- 40
RIEMEN	4273269M1	1	10- 170
RIEMEN	4285103M1	1	10- 5
RIEMEN	4288688M1	1	10- 5
RING.	X540004078000	1	90- 95

		Qty	PAGE
RING.	X540009478000	4	30- 55
		1	20- 10
ROTORSATZ	V836362228	1	10- 125
RUECKSCHLAGVENT.	3808023M91	1	10- 135
SAUGFILTER	G916951010010	1	70- 170
SAUGKORB	3787655M2	1	70- 180
SCHALTER	F916100600040	1	70- 100
SCHLAUCH	3713676M1	1	10- 185
SCHLUESSEL-SATZ	3902584M91	1	110- 40
SCHRAUBE	920700180070	24	130- 55
SEEGERING	X530106046000	1	70- 65
SENSOR	G716861100020	1	30- 75
SENSOR	G916970020014	1	90- 95
SENSOR	G916971020033	1	25- 75
SENSOR	V836666980	1	10- 100
SENSOR	V836667732	2	10- 100
SENSOR	V837069410	1	10- 100
SENSOR	V837070201	1	10- 100
SENSOR.	3797129M1	1	70- 250
SICHERUNG	3387322M1	1	110- 215
		X	80- 40
SICHERUNG	3580868M1	1	10- 165
		X	80- 40
SICHERUNG	3712661M1	X	80- 40
SICHERUNG	3780003M1	X	80- 40
SICHERUNG	3789732M1	1	80- 25
SICHERUNG	4271799M1	3	80- 25
		X	80- 40
SICHERUNG	4271800M1	X	80- 40
		1	120- 50
SICHERUNG	4271801M1	1	80- 30
		2	80- 25
		X	80- 40
		1	120- 50
SICHERUNG	4271802M1	X	80- 40
		2	80- 25
SICHERUNG	4271803M1	1	80- 40
		1	90- 50
SICHERUNG	4271842M1	1	80- 30
		X	80- 40
SICHERUNG	4276186M1	1	10- 155
		1	10- 160
		1	10- 165
SPEZIALMUTTER	3712611M2	24	130- 10
		24	130- 15
		20	130- 60
		20	130- 5
SPLINTBOLZEN	G916501120050	1	40- 70
STECKER	G205900900020	1	110- 185

LAGERVORSCHLAGSTEILE

D6

		Qty	PAGE
STEHBOLZEN	3716105M2	20	130- 60
STIFT	3011024X1	1	40- 35
STOPFEN	V836655493	1	10- 55
STOSSDAEMPFER	4273315M91	2	110- 10
TEMPERATURGEBER	H312100360030	1	90- 95
THERMOSTAT	V836015156	1	10- 65
THERMOSTAT	V836331590	1	10- 65
VENTIL	G716150200060	1	70- 110
WECHSELSTROMDYN.	3789983M91	1	10- 15
		1	10- 10
WEGEVENTIL	G312100600110	2	70- 105
WEGEVENTIL	G411151600020	4	70- 110
WISCHERBLATT	4275049M1	1	110- 160
WISCHERBLATT	4275053M1	1	110- 150
ZUENDSCHLUESSEL	4271358M1	1	80- 10

Qty PAGE

Qty PAGE

Qty PAGE

PEZZI CHE RECCOMANDIANO DI TENERE A MAGAZZINO

D7

		Qty	PAGE
ALTERNATORE	3789983M91	1	10- 10
		1	10- 15
AMMORTIZZATORE	4273315M91	2	110- 10
ANELLO	X540004078000	1	90- 95
ANELLO	X540009478000	4	30- 55
		1	20- 10
ANNELLO ELASTICO	X530106046000	1	70- 65
BULBO	3907077M1	1	120- 30
BULBO	3907384M1	1	120- 30
BULBO	CH175-1323	3	120- 5
		3	120- 10
BULBO	CH9X-8118	1	120- 50
BULBO 12V 1,2W	3302213M1	1	110- 180
		1	110- 175
		1	110- 185
BULBO 12V 1,2W	3405185M1	1	80- 15
BULBO 12V 10W	3385821M1	1	80- 45
BULBO 12V 21W	621235M1	1	120- 15
		1	120- 45
BULBO 12V 5W	1420037M1	1	120- 15
BULBO 12V 5W	3907271M1	1	80- 45
BULBO 12V 60/55W	3713341M1	1	120- 30
		1	120- 25
BULBO 21/5W	908543M1	1	120- 45
BULBO 45/40W HL	961866M1	1	120- 10
BULBO H3	1628494M1	2	120- 25
		2	120- 30
		1	120- 25
		1	120- 30
CHIAVE CONTATTO	4271358M1	1	80- 10
CILINDRO IDRAUL.	3902121M4	1	110- 40
CINGHIA	4273269M1	1	10- 170
CINGHIA	4285103M1	1	10- 5
CINGHIA	4288688M1	1	10- 5
COPPIGLIA	3011024X1	1	40- 35
CUSCINETTO	833059M1	1	20- 15
DADO	920700180080	24	130- 55
DADO SPECIALE	3712611M2	24	130- 15
		24	130- 10
		20	130- 5
		20	130- 60
DIODO	3907284M1	1	110- 145
DIODO	4274355M2	1	80- 25
DIRECTIONAL VALV	G312100600110	2	70- 105
DIRECTIONAL VALV	G411151600020	4	70- 110
ELEM.CARBURANTE	V836867231	1	10- 75
ELEM.CARBURANTE	V836867233	1	10- 75
ELEM.FILTRO ARIA	4270018M1	1	10- 205
ELEM.FILTRO ARIA	4278631M1	1	10- 205

		Qty	PAGE
ELEMENTO	V836855484	1	10- 60
ELEMENTO FILTRAN	4276648M1	1	70- 125
ELEMENTO FILTRAN	F916100600010	1	70- 100
ELETTROVALVOLA	3903960M1	1	70- 220
FILTRO	3712495M1	1	10- 170
FILTRO	F916100490010	1	70- 70
FILTRO CABINA	3786649M3	1	110- 140
FILTRO OLIO	V836862582	1	10- 105
FILTRO OLIO	V836867234	1	10- 60
FUSIBILE	3387322M1	1	110- 215
		X	80- 40
FUSIBILE	3580868M1	X	80- 40
		1	10- 165
FUSIBILE	3712661M1	X	80- 40
FUSIBILE	3780003M1	X	80- 40
FUSIBILE	3789732M1	1	80- 25
FUSIBILE	4271799M1	3	80- 25
		X	80- 40
FUSIBILE	4271800M1	X	80- 40
		1	120- 50
FUSIBILE	4271801M1	2	80- 25
		X	80- 40
		1	120- 50
		1	80- 30
FUSIBILE	4271802M1	X	80- 40
		2	80- 25
FUSIBILE	4271803M1	1	90- 50
		1	80- 40
FUSIBILE	4271842M1	X	80- 40
		1	80- 30
FUSIBILE	4276186M1	1	10- 160
		1	10- 165
		1	10- 155
GIUNTO DI TENUTA	3008359X1	2	60- 65
		2	60- 70
		2	60- 40
GIUNTO DI TENUTA	3010471X1	4	10- 170
		1	110- 115
GIUNTO DI TENUTA	365392X1	1	70- 150
GIUNTO DI TENUTA	3907428M1	1	70- 125
GIUNTO DI TENUTA	V614601924	1	10- 30
GIUNTO DI TENUTA	X548960666000	1	70- 100
GIUNTO DI TENUTA	X548987066000	1	70- 70
GIUNTO DI TENUTA	X548989201000	1	70- 70
GIUNTO FEMMINA	3785907M2	2	40- 110
GIUNTO FEMMINA	3786820M2	1	70- 140
GIUNTO PIANO	V615882227	3	10- 65
GIUNTO PIANO	V836362229	1	10- 125
GIUNTO PIANO	V836840992	1	10- 90

		Qty	PAGE
GIUNTO PIANO	V837067881	4	10- 50
GIUNTO ROTONDO	V615881827	2	10- 55
HALL SENSOR	G816970020040	2	90- 95
		1	20- 10
INDICATORE	3789379M1	1	70- 125
INTERRUTTORE	F916100600040	1	70- 100
INTERRUTTORE IND	3714137M1	1	40- 120
INTERRUTTORE IND	3714138M1	1	40- 120
INTERRUTTORE IND	3780395M2	1	80- 45
INTERRUTTORE IND	3783832M2	1	20- 20
INTERRUTTORE IND	4270970M3	1	25- 100
INTERRUTTORE IND	4271342M1	1	80- 10
INTERRUTTORE IND	4271343M1	1	80- 10
INTERRUTTORE IND	4271344M1	1	110- 160
INTERRUTTORE IND	4271346M1	1	80- 15
INTERRUTTORE IND	4271347M1	1	80- 15
INTERRUTTORE IND	4271348M2	1	80- 15
INTERRUTTORE IND	4271349M2	1	80- 15
INTERRUTTORE IND	4271350M1	1	80- 15
INTERRUTTORE IND	4271351M2	1	80- 15
INTERRUTTORE IND	4271809M1	1	20- 20
INTERRUTTORE IND	4271916M2	1	80- 10
INTERRUTTORE IND	4272778M1	1	20- 20
INTERRUTTORE IND	4284627M2	2	80- 20
INTERRUTTORE IND	4284628M2	2	80- 20
INTERRUTTORE IND	4291981M1	1	80- 15
INTERRUTTORE IND	4291982M1	1	25- 100
INTERRUTTORE SOL	H312900150010	1	30- 5
		1	30- 15
		2	70- 40
KIT CHIAVE	3902584M91	1	110- 40
KIT FILTRO	G001990100010	1	70- 220
KIT GIUNTO	3903317M91	1	40- 115
LAMPADA	3713798M91	2	120- 10
LAMPADA	3713799M91	2	120- 10
LAMPEGGIATORE	4271989M1	1	80- 40
LAMPEGGIATORE	4271990M1	1	80- 40
LENTE	136-5254	1	120- 50
PERNO ATTACCO	3387270M92	1	60- 5
PERNO ATTACCO	4272346M2	1	40- 65
PERNO D'ATTACCO	G916501120050	1	40- 70
PESO	202-9220	10	60- 5
PIASTRA	202-9223	2	60- 5
POTENZIOMETRO	4274087M1	1	25- 95
PRESA PRESSIONE	3785665M1	4	70- 155
		3	70- 155
PRESAELETTRICI M	G205900900020	1	110- 185
PRESS.TRANSDUCER	G718970020021	1	90- 95
PRESSOSTATO	3712526M1	1	10- 170

		Qty	PAGE
PRESSOSTATO	4278368M1	2	70- 165
		1	70- 155
		1	70- 160
PRESSOSTATO	G716970160030	1	25- 85
		1	90- 65
		1	90- 80
PRESSOSTATO	V837070209	1	10- 100
RELE	3387326M2	1	80- 40
RELE	3615652M1	2	80- 90
RELE	3779879M1	2	80- 25
RELE	4270844M1	1	80- 10
		X	80- 40
RELE	4271991M1	1	80- 40
RELE	4272431M1	1	80- 30
		1	120- 50
		X	80- 40
		4	80- 25
RELE	4272432M1	X	80- 40
ROTORE COMPLETO	V836362228	1	10- 125
ROTULA	3042427M1	2	40- 45
ROTULA	3042428M1	2	40- 45
ROTULA	3042430M1	2	40- 45
		2	40- 115
ROTULA	3042433M1	1	40- 25
ROTULA	3778880M1	4	100- 15
ROTULA	3783029M1	1	40- 115
ROTULA	3783030M1	1	40- 115
ROTULA	4303393M1	1	40- 25
ROTULA	4303395M1	2	40- 45
		2	40- 115
SENSORE	G716861100020	1	30- 75
SENSORE	G916970020014	1	90- 95
SENSORE	G916971020033	1	25- 75
SENSORE	V836666980	1	10- 100
SENSORE	V836667732	2	10- 100
SENSORE	V837069410	1	10- 100
SENSORE	V837070201	1	10- 100
SENSORE DI POSIZ	3797129M1	1	70- 250
SENSORE INDUTTIV	3618249M1	1	70- 125
SENSORE INDUTTIV	3716981M1	2	40- 40
SENSORE VELO.	V837069150	1	10- 100
SENSORE VELO.	V837070189	1	10- 100
SOLENOIDE	7302601101	2	60- 110
SOLENOIDE	V837069047	1	10- 80
SPAZZOLA TERGICR	4275049M1	1	110- 160
SPAZZOLA TERGICR	4275053M1	1	110- 150
SPINOTTO FILETT.	3716105M2	20	130- 60
SUCCHIEROLA	3787655M2	1	70- 180
SUCTION FILTER	G916951010010	1	70- 170

PEZZI CHE RECCOMANDIANO DI TENERE A MAGAZZINO

D8

		Qty	PAGE
TAPPO	V836655493	1	10- 55
TEMP. SENSOR	H312100360030	1	90- 95
TERMOSTATO	V836015156	1	10- 65
TERMOSTATO	V836331590	1	10- 65
TRANSDUCER	3784361M1	1	10- 235
		1	40- 120
		1	20- 20
TRANSDUCER	4275671M2	1	70- 45
TUBO FLESSIBILE	3713676M1	1	10- 185
VALVOLA	G716150200060	1	70- 110
VALVOLA NO RITOR	3808023M91	1	10- 135
VALVOLA-SICUREZZ	G716100600122	1	70- 105
VALVOLASOLENOIDE	G916100600142	1	70- 105
VITE	920700180070	24	130- 55

RECAMBIO QUE SE RECOMIENDA MANTENER EN STOCK

D9

		Qty	PAGE
ENSOR GIR.	V837069150	1	10- 100
ENSOR GIR.	V837070189	1	10- 100
ACOPLADOR HEMBRA	3785907M2	2	40- 110
ACOPLADOR HEMBRA	3786820M2	1	70- 140
ALCACHOFA	3787655M2	1	70- 180
ALTERNADOR	3789983M91	1	10- 10
		1	10- 15
AMORTIGUADOR	4273315M91	2	110- 10
ANILLO	X540004078000	1	90- 95
ANILLO	X540009478000	4	30- 55
		1	20- 10
ARIETE	3902121M4	1	110- 40
BOMB 12V 21W	621235M1	1	120- 15
		1	120- 45
BOMB C/I 21/5W	908543M1	1	120- 45
BOMBFARO 45/40W	961866M1	1	120- 10
BOMBILLA	3907077M1	1	120- 30
BOMBILLA	3907384M1	1	120- 30
BOMBILLA	CH175-1323	3	120- 10
		3	120- 5
BOMBILLA	CH9X-8118	1	120- 50
BOMBILLA 12V 10W	3385821M1	1	80- 45
BOMBILLA 12V 5W	1420037M1	1	120- 15
BOMBILLA 12V 5W	3907271M1	1	80- 45
BOMBILLA 12V1,2W	3302213M1	1	110- 185
		1	110- 175
		1	110- 180
BOMBILLA 12V1,2W	3405185M1	1	80- 15
BOMBILLA H3	1628494M1	1	120- 30
		2	120- 25
		1	120- 25
		2	120- 30
BOMBILLA12V60/55	3713341M1	1	120- 30
		1	120- 25
BULON CILINDRICO	G916501120050	1	40- 70
CAPTADOR INDUCTI	3618249M1	1	70- 125
CAPTADOR INDUCTI	3716981M1	2	40- 40
COJINETE	833059M1	1	20- 15
CONTACTOR	3714137M1	1	40- 120
CONTACTOR	3714138M1	1	40- 120
CONTACTOR	3780395M2	1	80- 45
CONTACTOR	3783832M2	1	20- 20
CONTACTOR	4270970M3	1	25- 100
CONTACTOR	4271342M1	1	80- 10
CONTACTOR	4271343M1	1	80- 10
CONTACTOR	4271344M1	1	110- 160
CONTACTOR	4271346M1	1	80- 15
CONTACTOR	4271347M1	1	80- 15
CONTACTOR	4271348M2	1	80- 15

		Qty	PAGE
CONTACTOR	4271349M2	1	80- 15
CONTACTOR	4271350M1	1	80- 15
CONTACTOR	4271351M2	1	80- 15
CONTACTOR	4271809M1	1	20- 20
CONTACTOR	4271916M2	1	80- 10
CONTACTOR	4272778M1	1	20- 20
CONTACTOR	4284627M2	2	80- 20
CONTACTOR	4284628M2	2	80- 20
CONTACTOR	4291981M1	1	80- 15
CONTACTOR	4291982M1	1	25- 100
CORREA	4273269M1	1	10- 170
CORREA	4285103M1	1	10- 5
CORREA	4288688M1	1	10- 5
DETECTOR	G716861100020	1	30- 75
DETECTOR	G916970020014	1	90- 95
DETECTOR	G916971020033	1	25- 75
DETECTOR	V836666980	1	10- 100
DETECTOR	V836667732	2	10- 100
DETECTOR	V837069410	1	10- 100
DETECTOR	V837070201	1	10- 100
DIODO	3907284M1	1	110- 145
DIODO	4274355M2	1	80- 25
DIRECTIONAL VALV	G312100600110	2	70- 105
DIRECTIONAL VALV	G411151600020	4	70- 110
ELECTROVALVULA	3903960M1	1	70- 220
ELEMENTO	V836855484	1	10- 60
ELEMENTO FILTRAN	4276648M1	1	70- 125
ELEMENTO FILTRAN	F916100600010	1	70- 100
ELEMENTO FL.AIRE	4270018M1	1	10- 205
ELEMENTO FL.AIRE	4278631M1	1	10- 205
ELEMENTO GASOLEO	V836867231	1	10- 75
ELEMENTO GASOLEO	V836867233	1	10- 75
EMISOR DEL CALOR	H312100360030	1	90- 95
ENTRADA PRESION	3785665M1	4	70- 155
		3	70- 155
ESCOBILLA L P BR	4275049M1	1	110- 160
ESCOBILLA L P BR	4275053M1	1	110- 150
ESPARRAGO ROSCA.	3716105M2	20	130- 60
FARO DELANTERO	3713798M91	2	120- 10
FARO DELANTERO	3713799M91	2	120- 10
FILTRO	3712495M1	1	10- 170
FILTRO	F916100490010	1	70- 70
FILTRO CABINA	3786649M3	1	110- 140
FILTRO D'SUCCION	G916951010010	1	70- 170
FILTRO DE ACEITE	V836862582	1	10- 105
FILTRO DE ACEITE	V836867234	1	10- 60
FUSIBLE	3387322M1	1	110- 215
		X	80- 40

		Qty	PAGE
FUSIBLE	3580868M1	1	10- 165
		X	80- 40
FUSIBLE	3712661M1	X	80- 40
FUSIBLE	3780003M1	X	80- 40
FUSIBLE	3789732M1	1	80- 25
FUSIBLE	4271799M1	X	80- 40
		3	80- 25
FUSIBLE	4271800M1	1	120- 50
		X	80- 40
FUSIBLE	4271801M1	1	80- 30
		2	80- 25
		X	80- 40
		1	120- 50
FUSIBLE	4271802M1	X	80- 40
		2	80- 25
FUSIBLE	4271803M1	1	80- 40
		1	90- 50
FUSIBLE	4271842M1	X	80- 40
		1	80- 30
FUSIBLE	4276186M1	1	10- 165
		1	10- 155
		1	10- 160
GRAPA CIRCULAR	X530106046000	1	70- 65
HALL SENSOR	G816970020040	2	90- 95
		1	20- 10
INDICADOR	3789379M1	1	70- 125
INTERMITENTE	4271989M1	1	80- 40
INTERMITENTE	4271990M1	1	80- 40
INTERR SOLENOIDE	H312900150010	1	30- 15
		1	30- 5
		2	70- 40
INTERRUP PRESION	3712526M1	1	10- 170
INTERRUP PRESION	4278368M1	1	70- 155
		1	70- 160
		2	70- 165
INTERRUP PRESION	G716970160030	1	25- 85
		1	90- 65
		1	90- 80
INTERRUP PRESION	V837070209	1	10- 100
INTERRUPTOR	F916100600040	1	70- 100
JGO.CJTO.ROTOR	V836362228	1	10- 125
JUEGO ALICATES	3902584M91	1	110- 40
JUEGO FILTRO	G001990100010	1	70- 220
JUEGO JUNTAS	3903317M91	1	40- 115
JUNTA PLANA	V615882227	3	10- 65
JUNTA PLANA	V836362229	1	10- 125
JUNTA PLANA	V836840992	1	10- 90
JUNTA PLANA	V837067881	4	10- 50
JUNTA REDONDA	V615881827	2	10- 55

		Qty	PAGE
JUNTA TOROIDAL	3008359X1	2	60- 65
		2	60- 70
		2	60- 40
JUNTA TOROIDAL	3010471X1	4	10- 170
		1	110- 115
JUNTA TOROIDAL	365392X1	1	70- 150
JUNTA TOROIDAL	3907428M1	1	70- 125
JUNTA TOROIDAL	V614601924	1	10- 30
JUNTA TOROIDAL	X548960666000	1	70- 100
JUNTA TOROIDAL	X548987066000	1	70- 70
JUNTA TOROIDAL	X548989201000	1	70- 70
LENTE DE VIDRIO	136-5254	1	120- 50
LLAVE CONTACTO	4271358M1	1	80- 10
PASADOR	3011024X1	1	40- 35
PASADOR ENGAN.	3387270M92	1	60- 5
PASADOR ENGAN.	4272346M2	1	40- 65
PESO	202-9220	10	60- 5
PLATO	202-9223	2	60- 5
PRESS.TRANSDUCER	G718970020021	1	90- 95
REGULADOR ELECT.	4274087M1	1	25- 95
RELE	3387326M2	1	80- 40
RELE	3615652M1	2	80- 90
RELE	3779879M1	2	80- 25
RELE	4270844M1	X	80- 40
		1	80- 10
RELE	4271991M1	1	80- 40
RELE	4272431M1	X	80- 40
		1	80- 30
		1	120- 50
		4	80- 25
RELE	4272432M1	X	80- 40
ROTULA	3042427M1	2	40- 45
ROTULA	3042428M1	2	40- 45
ROTULA	3042430M1	2	40- 45
		2	40- 115
ROTULA	3042433M1	1	40- 25
ROTULA	3778880M1	4	100- 15
ROTULA	3783029M1	1	40- 115
ROTULA	3783030M1	1	40- 115
ROTULA	4303393M1	1	40- 25
ROTULA	4303395M1	2	40- 45
		2	40- 115
SENSOR	3797129M1	1	70- 250
SOLENOIDE	7302601101	2	60- 110
SOLENOIDE	V837069047	1	10- 80
TAPON	V836655493	1	10- 55
TERMOSTATO	V836015156	1	10- 65
TERMOSTATO	V836331590	1	10- 65
TOMACORRIENTE M	G205900900020	1	110- 185

RECAMBIO QUE SE RECOMIENDA MANTENER EN STOCK

D10

		Qty	PAGE
TORNILLO	920700180070	24	130- 55
TRANSDUCER	3784361M1	1	40- 120
		1	20- 20
		1	10- 235
TRANSDUCER	4275671M2	1	70- 45
TUBO DE GOMA	3713676M1	1	10- 185
TUERCA	920700180080	24	130- 55
TUERCA ESPECIAL	3712611M2	24	130- 15
		20	130- 5
		20	130- 60
		24	130- 10
VALV.SIN RETORNO	3808023M91	1	10- 135
VALVULA	G716150200060	1	70- 110
VALVULA ALIVIO	G716100600122	1	70- 105
VALVULA SOLENOID	G916100600142	1	70- 105

RESERVED

NUMERICAL INDEX
INDEX NUMERIQUE
NUMMERN-INDEX
INDICE NUMERICO
INDICE NUMERICO

G1

000051867	60-100	001051421	60-90	005733367	60-90	016083444	60-100	1440988X1	110-55	1442171X1	40-120
	60-105		60-95		60-95		60-105	1441075X1	120-25		110-145
000054058	60-75	001051564	60-90	006011489	60-90	016163810	60-85		120-30	1442172X1	30-5
000057061	60-100		60-95	006033208	60-75	016252881	60-85	1441121X1	70-245		30-15
	60-105	001051577	60-100		60-85	017023490	60-90	1441206X1	110-225	1442190X1	10-215
000057073	60-100		60-105	006033580	60-85	025840020110	70-80		110-235		10-225
	60-105	001051584	60-80	006053774	60-90		70-90	1441226X1	130-20		130-20
000057970	60-90	001051620	60-85		60-95	136-5254	120-50		130-30		130-30
	60-95	001053338	60-100	0099047000000	25-10	138715140010	30-25	1441302X1	130-20	1442332X91	70-225
000058321	60-100		60-105	011041318	60-90	1420037M1	120-15		130-30		70-230
	60-105	001053758	60-85		60-95	1427000M1	110-65	1441462X1	70-35		70-235
000065060	60-75	001054026	60-110	011043431	60-90		110-70		110-140	1442477X1	70-155
	60-80	001113813	60-85		60-95		110-75		120-35	1442692X1	70-160
000137100	60-90	001423359	60-90	011043818	60-85		110-80	1441494X1	10-230	1442900X1	110-40
	60-95		60-95	011053790	60-90	1427024M1	110-100		90-50	1442958X1	25-95
000139339	60-90	001423360	60-90		60-95	1440012X1	70-125		90-65	1442962X1	100-20
	60-95		60-95	011141455	60-90		70-180		120-30	1442963X1	110-40
000145120	60-100	002010076	60-80		60-95	1440022X1	110-245	1441500X1	10-5	1442967X1	40-25
	60-105	002011260	60-100	012100090080	25-75	1440028X1	10-215		40-110		40-30
000215040A	60-90		60-105	014010327	60-90		10-225		70-45		100-15
	60-95	002011794	60-90		60-95	1440207X1	90-40		70-120	1442970X1	10-135
000235011A	60-85		60-95	014013773	60-90	1440231X1	30-5		70-250	1442993X1	30-5
000245025A	60-90	002013405	60-100		60-95		30-15		80-40		30-15
	60-95		60-105	015032885	60-100	1440319X1	40-70		100-5	1442994X1	10-235
000245027A	60-90	002020088	60-85		60-105	1440329X1	50-30		100-10		20-20
	60-95	002020903	60-100	015149020030	60-45		110-55		100-20	1443615X1	30-5
000245028A	60-90		60-105	015149020031	60-45		110-195		100-30		30-15
	60-95	002021812	60-90	015149020032	60-45		110-200		110-95		110-175
000245560B	60-100		60-95	015149020035	60-45		120-25		120-30		110-180
	60-105	002023410	60-100	015149020036	60-45		120-30		120-45		110-185
000245680	60-90		60-105	016010367	60-100	1440330X1	70-40	1441664X1	10-135	1443769X1	110-5
	60-95	002072756	60-100	016010368	60-80	1440349X1	40-115		10-150		110-10
000245837	60-90		60-105	016010370	60-85	1440350X1	10-5		130-20	1444071X1	60-90
	60-95	002143202	60-100	016010373	60-80		90-50		130-30		60-95
000339040	60-100		60-105	016010786	60-90		110-75	1441704X1	70-25	1444105X1	40-115
	60-105	005013296	60-100		60-95		110-165	1441782X1	70-40	1444351X1	20-20
000345621	60-90		60-105		60-100		130-60	1441786X1	60-40		110-230
	60-95	005090665	60-85		60-105	1440396X1	110-50		60-65	1444744X1	10-125
000345622	60-90	005093366	60-90	016011027	60-80	1440433X1	10-155		60-70	155302010110	30-25
	60-95		60-95	016011180	60-105		10-160	1441917X1	110-65	1617869M2	10-140
000345623A	60-90	005100497	60-100	016030718	60-80		10-165	1441932X1	10-5	1619912M1	70-5
	60-95		60-105	016033621	60-75	1440716X1	10-195		70-225	1626321M2	20-20
000513236	60-100	005101427	60-100		60-85		10-200		70-230		70-40
	60-105		60-105	016040843	60-100		130-20		70-235	1628494M1	120-25
000513236A	60-100	005103365	60-90		60-105	1440921X1	70-5	1441967X1	40-100		120-30
000727512A	60-90		60-95	016063718	60-100	1440922X1	70-120	1442021X1	70-150	1678404M1	120-5
	60-95	005103691	60-80		60-105		110-70				120-10

NUMERICAL INDEX
INDEX NUMERIQUE
NUMMERN-INDEX
INDICE NUMERICO
INDICE NUMERICO

G2

1694534M1	80-10	3001856X1	25-95	3009280X1	70-40	3009493X1	10-125	3009805X1	40-60	3010506X1	25-95
1696477M1	110-145		110-175		70-160		10-195	3009930X1	20-10		90-5
178100360050	25-85		110-180		110-100		10-200	3010007X1	20-10		90-65
178107080030	70-70		110-185		110-105		20-20	3010021X1	10-170		110-65
178810030450	70-70	3001968X1	60-5	3009281X1	20-20		70-50		10-180		110-70
1803494M1	110-80	3002070X91	60-25		70-215		100-15		70-120		110-75
184870050020	40-30		60-30		120-30		100-20	3010045X1	40-115		110-80
195562M1	70-155	3002813X1	10-10	3009283X1	10-5		110-5	3010067X1	40-55		110-85
198100080520	70-80	3002877X1	130-20		110-110		110-10		110-10		110-95
	70-85		130-30	3009285X1	20-10	3009494X1	50-30	3010070X1	10-180		110-170
199100080110	50-5	3004715X1	60-25		70-225		50-35		110-165		120-30
	50-10		60-30		70-230		70-225	3010151X91	130-25	3010556X1	20-10
199860070010	40-40	3004861X1	10-125		70-235		70-230	3010154X1	70-170	3010557X1	60-25
202-9220	60-5	3005728X1	10-135		110-35		70-235	3010156X1	10-190		60-30
202-9223	60-5		10-140		110-215		110-5	3010159X1	10-195	3010563X1	40-85
205100150130	25-5	3005908X1	70-225		110-220		110-10		10-200	3010567X1	10-120
205100480010	30-35		70-230		110-230	3009496X1	10-170	3010160X1	10-195	3010569X1	40-115
205116300081	25-75		70-235	3009288X1	10-125		70-50	3010162X1	10-195		130-60
205900163040	50-30	3006429X1	40-115	3009291X1	25-95	3009502X1	10-10		10-200	3010572X1	10-210
205950010340	70-95	3007432X1	70-225	3009432X1	110-55	3009505X1	10-180	3010181X1	110-65		10-215
22428X	80-30		70-230	3009439X1	110-220		70-155	3010182X1	110-10		10-220
225100100160	70-85		70-235		110-230	3009506X1	10-180	3010185X1	70-160		10-225
238950010010	70-95	3007850X1	10-235	3009444X1	110-40	3009508X1	70-40	3010239X1	10-170	3010578X1	10-235
246860030130	25-85	3007920X1	110-15	3009491X1	10-135	3009509X1	10-220	3010334X1	40-65		90-30
	25-90	3007934X1	10-140		10-155		10-225	3010349X1	60-40		110-70
268600130110	70-80	3008179X1	10-155		10-160	3009510X1	10-210		60-65		110-80
	70-85		10-160		10-165		10-215		60-70		110-85
	70-90		10-165		10-185		130-20	3010351X1	25-95		120-15
2752579M1	100-45	3008317X1	40-115		40-120		130-30	3010434X1	60-5	3010597X1	80-30
281880010070	40-40	3008359X1	60-40		70-225	3009512X1	110-10	3010435X1	40-80		110-65
2900601303	60-100		60-65		70-230	3009515X1	110-10	3010467X1	90-25	3010604X1	10-155
	60-105		60-70		70-235	3009516X1	130-30		110-155		10-160
30-3076830	10-130	3008483X1	25-95		110-70	3009530X1	110-25		110-245		10-165
3000193X1	110-220		110-215	3009492X1	10-195	3009533X1	120-20		120-35	3010613X1	110-10
	110-225	3008914X1	110-150		10-200		120-45	3010471X1	10-170	3010683X1	110-115
	110-230	3009132X1	110-5		40-70	3009538X1	80-75		110-115		110-120
	110-235	3009192X1	60-40		40-75	3009695X1	10-195	3010472X1	10-170		110-125
3000483X1	10-185		60-65		50-30		10-200	3010473X1	10-170	3010684X1	70-125
3000926X1	110-235		60-70		100-25		10-210		110-115	3010762X1	110-150
3001317X1	70-225	3009193X1	110-65		110-5		10-215	3010477X1	10-120	3010763X1	130-20
	70-230	3009198X1	60-40				10-220		80-75		130-30
	70-235		60-65				10-225		120-15	3010765X1	130-60
3001345X91	70-30		60-70				70-45		120-45	3010775X1	110-40
3001414X1	110-225	3009205X1	80-25			3009746X1	40-70	3010505X1	40-85		110-50
3001757X1	110-40	3009257X1	70-120				60-15				110-55
3001758X1	110-115		110-110			3009747X1	40-115			3010782X1	60-5
						3009778X1	70-5			3010791X1	80-5

NUMERICAL INDEX
INDEX NUMERIQUE
NUMMERN-INDEX
INDICE NUMERICO
INDICE NUMERICO

G3

3010793X1	**40-80**
3010804X1	**10-235**
	90-5
	90-65
	110-145
	110-175
	110-180
	110-185
3010808X1	**10-210**
	10-215
	10-220
	10-225
	70-30
3010818X1	**20-20**
	25-95
	70-15
	70-40
3010842X1	**20-15**
3010850X1	**60-25**
	60-30
3010872X1	**110-205**
	110-210
3010875X1	**10-215**
	10-225
	110-10
3010885X1	**40-80**
3010890X1	**70-180**
3010895X1	**70-15**
	70-40
3010909X1	**110-205**
	110-210
3010910X1	**110-100**
	110-105
	110-110
3010915X1	**40-115**
	60-5
3010922X1	**10-125**
3010927X1	**40-115**
3010945X1	**40-75**
3010966X1	**60-5**
3010976X1	**60-5**
3011023X1	**20-10**
3011024X1	**40-35**
3011035X1	**110-40**
	110-50
3011036X1	**20-10**
	40-15
	70-140
	70-145
	70-155
3011037X1	**70-120**
	70-125
	70-145
	70-155
	70-180
3011038X91	**30-5**
	30-15
	70-45
	70-130
	70-135
	70-155
3011039X91	**70-155**
3011040X91	**40-15**
	70-140
	70-145
3011041X91	**70-140**
3011042X91	**70-155**
3011043X91	**70-145**
	70-155
3011044X91	**70-180**
3011045X91	**70-185**
	70-190
	70-195
3011047X91	**60-35**
3011049X91	**70-125**
3011055X91	**70-185**
	70-190
	70-195
3011059X91	**70-170**
3011061X1	**70-25**
	70-185
	70-190
	70-195
3011062X1	**70-185**
	70-190
	70-195
3011063X1	**70-120**
3011065X1	**40-110**
3011070X91	**40-15**
3011071X91	**40-110**
3011082X91	**70-125**
	70-170
	70-185
	70-190
	70-195
3011083X91	**70-150**
	70-245
3011084X91	**70-125**
	70-225
	70-230
	70-235
3011085X91	**40-100**
	40-105
	70-185
	70-190
	70-195
3011087X91	**70-180**
3011088X91	**70-155**
	70-185
	70-190
	70-195
3011089X91	**40-15**
	70-125
	70-145
	70-185
	70-190
	70-195
3011093X91	**40-105**
	70-185
	70-190
	70-195
3011099X91	**70-155**
	70-245
3011103X91	**70-125**
3011105X91	**20-10**
	70-140
	70-155
3011107X91	**70-125**
	70-155
3011119X1	**40-100**
	40-110
	70-125
	70-185
	70-190
	70-195
3011120X1	**70-225**
	70-230
	70-235
3011136X91	**40-100**
	40-110
	70-125
	70-185
	70-190
	70-195
3011138X91	**70-225**
	70-230
	70-235
3011144X1	**70-45**
	70-125
	70-130
	70-135
	70-145
	70-155
	70-170
	70-185
	70-190
	70-195
3011145X1	**70-150**
	70-225
	70-230
	70-235
	70-245
3011146X1	**70-125**
	70-225
	70-230
	70-235
	70-245
3011147X1	**40-15**
	40-100
	40-105
	40-110
	70-125
	70-145
	70-180
	70-185
	70-190
	70-195
3011148X1	**70-225**
	70-230
	70-235
3011149X1	**70-180**
3011150X1	**70-155**
	70-185
	70-190
	70-195
3011154X1	**40-105**
	70-130
	70-135
3011172X1	**130-20**
3011175X1	**25-95**
3011180X1	**10-10**
3011194X1	**40-80**
	40-90
	60-25
	60-30
3011203X1	**40-120**
3011204X1	**110-35**
3011214X1	**80-30**
	90-25
3011222X1	**70-120**
3011223X91	**40-110**
	70-150
3011246X91	**60-35**
3011268X1	**70-5**
	70-15
3011273X1	**60-15**
3011279X1	**20-10**
3011281X1	**20-10**
3011282X1	**20-10**
3011289X91	**70-245**
3011294X91	**10-125**
3011296X91	**70-150**
3011314X91	**70-170**
3011338X1	**40-65**
3011339X1	**10-5**
3011368X1	**110-195**
	110-200
3011372X1	**100-20**
3011383X1	**40-65**
3011390X1	**40-80**
	40-85
	40-90
	70-225
	70-230
	70-235
3011404X91	**70-225**
	70-230
	70-235
3011422X1	**60-20**
3011424X1	**10-210**
	10-215
	10-220
	10-225
3011434X1	**110-70**
	110-85
3011445X1	**110-240**
3011495X1	**20-10**
	110-115
3011496X1	**110-115**
3011517X1	**40-85**
	40-90
3011533X91	**70-120**
3011534X91	**70-185**
	70-190
	70-195
	70-225
	70-230
	70-235
3011538X1	**40-80**
3011539X1	**30-5**
	30-15
3011543X91	**70-45**
	70-130
	70-135
	70-155
3011544X91	**70-130**
	70-135
	70-145
3011545X1	**40-80**
	50-30
	50-35
3011546X1	**40-80**
	40-85
	40-90
3011547X91	**70-45**
	70-130
	70-135
3011548X91	**40-105**
3011550X91	**70-130**
	70-135
3011553X91	**70-45**
3011554X91	**70-45**
	70-145
3011582X91	**70-180**
3011593X91	**70-120**

NUMERICAL INDEX
INDEX NUMERIQUE
NUMMERN-INDEX
INDICE NUMERICO
INDICE NUMERICO

G4

3011594X1	70-120
3011600X1	90-25
3011608X1	40-55
	40-60
3011610X1	20-10
3011618X91	10-125
	70-180
3011619X91	60-35
3011629X1	60-70
3011639X91	70-120
3011649X1	10-135
3011669X1	110-100
	110-105
	110-110
3011675X1	60-5
3011679X1	60-5
3011681X1	60-5
3011704X1	60-5
3011705X1	60-5
3011714X1	110-110
3011733X1	60-5
3011736X1	70-200
	70-205
	70-210
3011771X91	60-30
	70-145
3011772X91	70-155
3011804X1	10-125
	70-185
	70-190
	70-195
3011805X1	40-15
3011807X1	40-15
	70-185
	70-190
	70-195
3011808X1	70-120
3011810X1	70-125
	70-185
	70-190
	70-195
3011814X1	70-185
	70-190
	70-195
3011820X1	70-185
	70-190
	70-195
3011849X1	60-5
3011970X1	40-80
3011984X1	10-5
3012016X1	10-125
3013353X1	80-30
	80-65
	80-70
	90-5
	90-55
	90-70
	90-75
3013354X1	80-30
	80-65
	80-70
	90-5
	90-55
	90-70
	90-75
3013355X1	80-30
	80-65
	80-70
	90-5
	90-70
	90-75
3013356X1	90-55
3013377X1	90-50
3015134X1	70-120
3015163X1	60-35
3015187X1	130-65
3015215X1	40-75
3015258X1	10-170
3015395X1	130-25
3015484X1	130-20
	130-30
3019056X1	80-40
3019057X1	80-40
3019123X1	90-65
	110-70
3019124X1	110-205
	110-210
3019139X1	10-235
	20-20
	70-40
	110-20
	110-25
3019214X1	20-20
3019228X1	40-55
3019302X91	10-185
3019393X1	10-185
3019396X1	10-150
	70-125
3019397X1	70-180
3019398X1	70-185
	70-190
	70-195
	70-225
	70-230
	70-235
3019546X1	120-40
3019560X1	10-230
	20-10
	100-5
	100-10
	110-70
3019564X1	110-115
	110-120
	110-125
3019571X1	30-5
	30-15
3019574X1	10-150
3019575X1	130-65
3019852X1	60-5
3019862X1	70-120
	70-130
	70-135
3019863X1	70-170
3019865X1	110-10
3019868X1	130-65
3019871X1	20-10
3019874X1	20-10
3019875X1	100-25
3019877X1	130-65
3019880X1	30-5
	30-15
	110-20
3019894X1	90-40
3038134M1	10-210
	10-215
	10-220
	10-225
3041656M2	80-75
3041932M1	110-35
	110-80
3042427M1	40-45
3042428M1	40-45
3042430M1	40-45
	40-115
3042433M1	40-25
3042523M1	120-15
3052943M2	120-45
3052944M2	120-45
3101663M1	110-225
	110-235
3101996M1	110-225
	110-235
3102401M1	110-220
	110-225
	110-235
3105034M1	110-230
3105395M1	110-225
	110-235
3105404M1	110-225
	110-235
3105505M1	120-15
3105772M1	40-60
3105774M1	40-60
3106496M1	110-155
3108243M1	70-215
3108244M1	70-215
	70-220
3108248M1	70-215
311200020050	50-30
3302213M1	110-175
	110-180
	110-185
3310827M92	110-130
	110-135
3310833M1	110-130
	110-135
3310836M1	110-130
	110-135
3310839M1	110-130
	110-135
3310849M1	110-130
	110-135
3310902M91	120-40
3321918M1	10-210
	10-215
	10-220
	10-225
3378976M1	100-50
3382812M91	60-5
3382824M1	40-85
3382826M1	40-65
	40-70
338317X1	110-65
3383977M1	10-170
3384129M1	40-115
3384131M1	40-80
3385604M1	20-20
	70-40
3385820M1	80-45
3385821M1	80-45
3385913M2	10-235
338600X1	110-245
338612X1	10-185
338614X1	10-185
	110-125
338615X1	10-210
	10-215
	10-220
	10-225
338617X1	70-170
	110-75
338618X1	10-135
	10-140
	10-185
3386192M1	90-25
	110-110
3386216M1	60-5
3386406M1	130-55
3386466M1	130-65
338662X1	80-90
338686X1	70-170
3387161M2	40-25
	40-30
338716X91	20-20
	70-125
338717X91	40-15
	40-110
	70-125
338725X1	70-185
	70-190
	70-195
3387270M92	60-5
3387320M1	90-50
3387321M1	80-40
3387322M1	80-40
	110-215
3387326M2	80-40
338737X1	40-110
338738X1	40-15
338747X91	70-30
3387512M1	110-115
3387513M1	110-115
3387555M1	80-45
	100-15
	100-20
338760X1	10-125
	60-30
	70-50
	70-145
	70-180
338761X1	20-20
	70-45
	70-125
	70-145
338762X1	30-5
	30-15
	40-15
	60-35
	70-30
	70-45
	70-130
	70-135
	70-140
	70-150
	70-155
	70-245
338763X1	70-30
	70-45
	70-125
	70-130
	70-135
338764X1	40-15
	40-110
	70-30
	70-125
3387756M1	10-145
3387945M1	10-130

338795X91 40-15
70-30
70-140
70-150
70-155
70-245
3388264M1 120-10
3388272M1 110-5
3388779M1 110-115
110-120
110-125
3388920M94 70-5
338906X91 60-30
70-50
70-145
338923X1 10-125
40-110
70-150
3389664M1 110-150
3389703M1 10-180
3389841M1 40-40
90-70
90-75
3389958M1 70-5
339003X1 60-85
60-100
60-105
339004X1 60-100
60-105
339009X1 10-10
10-220
10-225
40-120
110-80
110-100
110-105
110-110
339010X1 10-170
10-190
10-210
10-215
10-220
10-225
70-25
70-170
110-220
339011X1 10-170

339013X1 90-25
339019X1 40-40
339020X1 40-115
339030X1 10-5
10-165
10-170
40-110
60-70
70-120
80-40
80-65
80-70
80-75
80-80
90-40
90-45
90-55
90-65
90-70
90-75
100-15
100-20
339034X1 10-135
100-25
110-10
130-65
339054X1 30-5
30-15
130-20
130-30
339070X1 20-20
70-5
130-25
339080X1 40-25
339091X1 110-40
339102X1 25-95
40-120
70-40

339123X1 10-5
10-135
10-165
10-170
10-180
10-195
10-200
10-235
20-20
25-95
40-90
50-30
70-35
70-50
80-25
80-80
90-25
90-40
90-45
110-245

339124X1 10-5
10-120
10-150
10-155
10-160
10-165
10-170
10-180
10-185
10-210
10-215
10-220
10-225
70-5
70-35
70-125
70-180
70-225
70-230
70-235
100-5
100-10
100-15
100-25
110-220
110-230
110-245
120-45
339132X1 10-10
40-70
339135X1 40-20
339159X1 70-30
339160X1 70-180
90-50
339168X1 70-25
110-220
110-230

339169X1 10-5
10-170
10-180
10-185
20-20
30-5
30-15
60-40
60-65
60-70
70-25
70-30
70-35
70-185
70-190
70-195
80-25
80-80
100-5
100-10
100-15
100-20
100-25
110-10
110-40
110-65
110-80
110-150
110-220
110-230
120-25
120-30
120-40
339182X1 110-5
339192X1 40-25
40-30
339228X1 10-210
10-215
10-220
10-225
40-100
70-225
70-230
70-235
110-220
110-230

339229X1 40-100
40-110
70-150
70-185
70-190
70-195
339230X1 70-45
70-125
70-135
70-185
70-190
70-195
70-225
70-230
70-235
90-40
90-45
339234X1 110-5
110-10
339262X1 40-110
100-20
339275X1 110-5
339282X1 70-5
70-130
70-135
339287X1 110-225
110-235
339291X1 10-210
10-215
10-220
10-225
110-10
339303X1 10-230
339307X1 40-20
339337X1 40-80
50-30
70-30
70-155
110-80
110-115
110-150
339362X1 110-225
110-230
110-235
339368X1 110-155

339374X1 20-10
40-90
70-170
80-80
120-5
120-10
339375X1 80-75
80-80
110-165
120-35
339376X1 40-40
339377X1 40-60
40-70
339381X1 10-120
339402X1 10-5
10-10
10-125
10-170
10-195
10-200
10-210
10-220
20-20
50-35
70-125
80-25
100-15
100-20
110-5
110-10
110-190
120-25
120-30
130-20
130-30
339437X1 20-15
339451X1 40-20
339526X1 10-130
339548X1 10-235
339557X1 10-170

339560X1 10-5
10-135
10-140
10-210
30-5
30-15
40-40
70-120
70-170
80-75
80-80
90-65
100-15
110-150
120-35
339563X1 10-230
339581X1 10-95
339602X1 60-40
60-65
60-70
339605X1 60-40
60-65
60-70
339608X1 40-20
40-25
40-30
40-55
60-25
60-30
339615X1 40-35
339648X1 40-85
339666X1 10-165
70-35
90-55
339721X1 20-10
90-25
90-65
100-20

339761X1 10-170
10-180
10-190
10-210
10-215
10-220
10-225
10-235
30-5
30-15
40-35
40-110
60-85
70-35
100-25
110-10
110-65
110-100
110-105
110-110
339783X1 40-115
339794X1 70-40
339800X1 70-40
339804X1 90-45
90-50
110-165
339806X1 40-25
339817X1 10-210
10-215
339820X1 20-15
339881X1 10-210
10-215
10-220
10-225
130-20
3405185M1 80-15
345300100110 30-40
3473640M91 70-20
3476132M91 110-50
3476133M91 110-50
3478051M1 110-50
3478052M1 110-50
353428X1 110-230
353557X1 110-220
110-230
353558X1 110-245
353562X1 110-230

353772X1 110-240
354080X1 40-35
354092X1 40-20
40-25
40-30
357145X1 10-235
357740X1 70-180
3580117M1 100-5
100-10
110-110
3580173M1 110-170
3580230M1 130-60
3580315M1 100-45
3580581M1 100-20
3580599M1 110-75
3580695M1 70-35
70-130
70-135
80-30
3580774M1 110-60
110-165
3580776M1 25-95
3580795M1 100-25
3580796M1 40-85
3580848M1 120-40
3580856M1 10-165
3580868M1 10-165
80-40
3581131M1 70-25
3581239M1 110-190
358139X1 10-170
3581424M1 10-130
30-5
30-15
80-25
80-30
3581507M1 10-190
110-190
3581527M1 60-5
3581563M1 100-45
3581642M1 40-85
3581687M1 40-75
358176X1 70-170
3581985M1 40-70
3582043M2 40-25
40-55

3582094M1 80-25
90-5
90-70
90-75
3582441M1 110-155
3582442M1 110-155
3582443M1 110-155
3582802M1 90-40
3583069M1 110-155
3583086M1 110-155
110-160
3583427M1 10-185
3583548M1 10-140
90-40
90-45
358724X91 10-180
359305X1 70-170
3595678M1 100-45
3595679M1 100-45
3595685M1 100-45
3596314M1 120-15
3596432M1 100-45
3611974M2 10-120
3613598M91 10-165
3613599M91 10-165
3613600M1 10-165
361530X1 110-240
3615352M1 110-75
3615652M1 80-90
3615709M1 40-55
3615710M1 40-55
3615711M1 40-55
3615752M2 10-120
3616277M1 110-40
110-80
110-150
110-160
110-245
3616399M1 10-230
3617848M91 110-175
110-180
110-185
3617859M1 110-35
3618249M1 70-125
3618951M1 120-45
3619096M1 80-15
110-215

3619219M1 40-25
3619229M2 130-20
130-30
3619603M1 110-55
3619604M1 110-55
3619605M1 110-55
3619609M1 110-55
3619610M1 110-55
3619622M1 10-145
10-185
40-120
70-150
80-30
80-45
80-85
90-5
90-25
90-60
90-85
90-90
110-75
110-85
3619813M1 40-115
3619814M1 40-115
3619906M1 110-55
3619907M1 110-55
3619908M1 110-55
364603X1 10-150
365392X1 70-150
365909X1 110-65
365916X1 110-130
110-135
365924X1 110-165
120-50
367073X1 40-25
367439X1 80-45
367788X1 70-170
368374X1 40-110
3712185M1 120-35
3712224M1 10-180
3712465M1 10-135
10-145
10-150
3712495M1 10-170
3712526M1 10-170

3712611M2	130-5	3714694M1	80-45	3765787M1	60-90	3765890M1	60-90	3766065M1	60-90	3778841M2	80-25
	130-10		110-60		60-95		60-95		60-95		120-5
	130-15		110-155	3765836M1	60-90	3765891M1	60-90	3766169M91	60-100		120-10
	130-60		120-50		60-95		60-95		60-105	3778880M1	100-15
3712661M1	80-40	3714795M1	20-10	3765837M1	60-90	3765892M1	60-90	3766280M93	60-55	3779038M1	10-185
3712693M1	110-5	3715074M1	110-150		60-95		60-95	3777017M2	100-35	3779514M2	60-20
3712744M1	110-125	3715118M1	110-245	3765842M91	60-55	3765893M1	60-90		100-40	3779515M2	60-20
3712809M2	110-5	3715142M1	10-235		60-60		60-95	3777020M1	100-35	3779547M1	80-25
3712851M91	10-235		110-70	3765843M91	60-55	3765894M1	60-90		100-40	3779567M1	130-30
3712866M2	10-235		110-170		60-60		60-95	3777021M3	40-105	3779699M1	80-10
3712867M1	10-235	3715143M1	25-95	3765844M91	60-55	3765895M1	60-90		70-105	3779879M1	80-25
	90-25		110-70		60-60		60-95		70-130	3780003M1	80-40
3712886M1	10-235		110-85	3765873M1	60-90	3765896M1	60-90		70-135	3780302M1	130-55
3713042M1	10-235	3715438M1	110-45		60-95		60-95		100-35	3780395M2	80-45
3713127M1	110-175	3715689M1	40-20	3765874M1	60-90	3765897M1	60-90		100-40	3780467M1	130-30
	110-185	3715690M1	40-20		60-95		60-95	3777586M2	130-20	3780468M2	130-30
3713140M1	110-245	3715849M2	40-25	3765875M1	60-90	3765898M1	60-90		130-30	3780483M1	10-210
3713151M1	80-15	3715923M91	80-80		60-95		60-95	3777587M2	130-30		10-215
	90-5	3715925M1	80-80	3765876M1	60-90	3765899M1	60-90	3777613M1	110-115		10-220
	110-160	3715991M1	110-80		60-95		60-95		110-120		10-225
3713341M1	120-25	3716105M2	130-60	3765877M1	60-90	3765900M1	60-90		110-125	3780939M1	20-20
	120-30	3716106M4	130-60		60-95		60-95	3777615M1	110-115	3781310M1	90-40
3713367M1	80-10	3716107M2	130-60	3765878M1	60-90	3765901M1	60-90		110-120		90-45
3713385M1	80-15	3716108M3	130-55		60-95		60-95		110-125	3781512M1	25-95
3713404M1	70-40	3716268M1	130-60	3765879M1	60-90	3765902M1	60-55	3777617M1	110-115	3781621M1	10-180
	70-120	3716269M1	130-60		60-95		60-60		110-120	3781906M1	70-155
3713587M1	110-80	3716934M1	20-10	3765880M1	60-90	3765904M91	60-55		110-125	3781907M1	70-30
3713669M4	70-15	3716981M1	40-40		60-95		60-60	3777699M2	110-150	3781908M1	60-40
3713676M1	10-185	372081X1	60-25	3765881M1	60-90	3766050M1	60-100	3777700M2	110-150		70-25
3713699M1	100-45		60-30		60-95		60-105	3777716M1	130-30	3781911M1	10-180
3713741M1	110-160	372082X1	60-30	3765882M1	60-90	3766054M1	60-90	3777737M1	110-115	3781936M1	70-185
3713742M1	110-105	3760678M1	110-240		60-95		60-95		110-120		70-190
	110-160	3760697M1	80-30	3765883M1	60-90	3766055M1	60-90		110-125		70-195
3713785M1	70-15		80-45		60-95		60-95	3778091M1	110-190	3781937M1	60-40
3713798M91	120-10	3764102M1	60-90	3765884M1	60-90	3766056M1	60-90	3778361M1	110-115		70-25
3713799M91	120-10		60-95		60-95		60-95		110-120	3781972M3	130-45
3713803M1	110-60	3764103M1	60-100	3765885M1	60-90	3766058M1	60-100		110-125	3781982M3	130-45
3714072M91	110-165		60-105		60-95		60-105	3778372M1	110-150	3782154M2	130-55
3714137M1	40-120	3764700M1	60-55	3765886M1	60-90	3766059M91	60-100	3778376M2	110-65	3782155M1	130-55
3714138M1	40-120		60-60		60-95		60-105	3778519M1	25-95	3782157M2	130-55
3714264M1	80-45	3765039M1	60-90	3765887M1	60-90	3766060M91	60-100		110-215	3782344M1	70-120
3714291M2	90-40		60-95		60-95		60-105	3778706M1	90-25	3782356M1	10-210
3714482M1	110-80	3765539M1	60-80	3765888M1	60-90	3766061M91	60-90	3778749M1	70-35		10-215
3714488M4	20-20	3765756M1	60-100		60-95		60-95		110-80		10-220
	70-40		60-105	3765889M1	60-90	3766063M1	60-90		110-95		10-225
3714516M2	110-175	3765786M1	60-90		60-95		60-95			3782489M1	100-45
	110-185		60-95								

3782608M1	10-210
	10-215
	10-220
	10-225
3782684M1	40-115
	60-10
3782691M1	40-115
3782780M1	40-120
	100-20
3782784M1	10-210
	10-215
3783021M2	40-115
3783022M1	40-115
3783023M1	40-115
3783024M1	40-115
3783027M1	40-115
3783029M1	40-115
3783030M1	40-115
3783046M1	10-180
3783099M4	10-180
3783100M4	10-180
3783101M1	10-180
3783201M1	110-50
3783273M2	100-10
3783419M1	100-20
3783428M2	100-20
3783573M1	10-185
3783632M6	40-115
3783633M7	40-115
3783670M2	10-180
3783677M1	80-90
	110-75
	110-155
	120-50
3783832M2	20-20
3783857M1	20-20
	80-30
3783956M1	10-210
	10-215
	10-220
	10-225
3784237M1	25-100
	80-15
3784336M1	110-80
3784337M1	110-80
3784341M2	10-235
3784343M2	10-235
3784361M1	10-235
	20-20
	40-120
3784654M1	10-170
3784666M1	10-155
	10-160
	10-165
	80-25
3784893M1	10-155
	10-160
	10-165
3784894M1	110-80
3784918M1	10-190
3784948M1	130-30
3785000M1	10-230
3785098M1	130-15
3785240M1	130-15
3785335M3	10-230
3785336M3	10-230
3785645M5	20-20
3785650M1	70-35
3785651M1	70-40
3785652M2	70-40
3785665M1	70-155
3785693M91	110-240
3785702M1	10-170
3785778M1	130-5
3785786M1	130-15
3785846M1	130-5
	130-15
3785847M1	130-5
	130-15
3785848M1	130-5
	130-15
3785878M3	10-170
3785907M2	40-110
3785913M1	80-75
3785914M1	80-80
3785976M3	10-180
3786050M1	10-135
3786069M1	40-110
3786087M1	130-5
	130-15
3786088M1	130-5
3786092M1	10-20
3786093M1	10-20
3786098M2	40-120
3786131M2	40-120
3786133M2	40-120
3786152M2	10-230
3786164M2	25-95
3786186M2	40-120
3786216M1	25-95
	110-215
3786225M1	10-200
3786259M1	40-120
3786267M1	110-10
3786281M2	110-10
3786299M1	100-25
3786314M1	100-35
	100-40
3786382M3	90-30
	90-35
3786383M3	90-30
	90-35
3786411M1	110-80
3786462M91	60-10
3786490M1	130-60
3786495M3	110-180
3786607M1	130-15
3786637M1	110-60
3786649M3	110-140
3786650M91	110-140
3786651M91	110-115
3786653M2	110-115
3786654M2	110-115
3786659M2	110-145
3786660M95	110-145
3786664M91	120-25
3786665M91	120-25
3786666M91	120-25
3786668M93	120-25
	120-30
3786670M1	120-45
3786672M1	110-75
3786673M1	80-45
3786676M3	110-170
3786678M1	110-75
3786684M1	110-75
3786689M91	120-45
3786690M91	120-45
3786691M91	120-45
3786692M91	120-45
3786693M92	120-25
	120-30
3786754M91	10-135
3786764M1	10-135
3786775M91	110-155
3786778M1	110-150
3786779M2	110-155
3786780M1	110-150
	110-155
3786781M1	110-155
3786782M1	110-155
	110-160
3786791M92	120-15
3786812M1	100-35
	100-40
3786820M2	70-140
3786844M2	10-210
3786847M1	130-60
3786848M1	130-60
3786909P1	110-105
3786910P2	110-105
3786913P1	110-100
	110-110
3786914P1	110-100
	110-110
3786915P1	110-100
3786916P1	110-100
3786919P1	110-100
	110-110
3786920P1	110-100
	110-110
3786991M3	110-5
3786992M3	110-5
3787065M93	110-10
3787068M1	110-10
3787069M1	110-10
3787081M1	110-10
3787102M1	130-60
3787105M1	110-105
3787106M1	110-105
3787111M1	110-100
3787112M1	110-100
3787113M1	110-100
	110-110
3787114M1	110-100
	110-110
3787115M1	110-100
	110-110
3787116M1	110-100
	110-110
3787117M1	110-105
3787118M1	110-105
3787123M1	110-100
3787124M1	110-100
3787125M1	110-100
3787126M1	110-100
3787127M1	110-100
3787128M1	110-100
3787129M1	110-100
	110-105
3787130M1	110-100
	110-110
3787143M1	25-95
	80-90
3787145M91	110-195
3787146M91	110-195
3787147M91	110-195
3787152M1	110-195
3787154M91	110-200
3787155M91	110-200
3787156M91	110-200
3787157M1	110-200
3787184M1	80-90
3787185M1	80-90
3787186M1	110-120
3787187M1	110-120
	110-125
3787192M1	80-90
3787195M1	110-100
	110-105
3787196M1	110-100
	110-110
3787215M91	100-25
3787409M95	80-5
3787415M1	70-15
3787495M1	25-95
3787500M92	70-15
3787512M91	80-85
3787513M91	80-45
3787528M95	80-65
3787578M1	70-250
	110-10
3787580M93	10-230
3787595M92	70-250
3787600M2	70-250
3787612M1	10-185
3787634M1	10-170
3787655M2	70-180
3787683M1	100-35
	100-40
	110-245
3787712M2	130-45
3787713M1	130-55
3787722M2	60-25
	60-30
3787886M1	10-170
3787910M1	70-170
3787911M1	70-125
3787918M1	70-25
	70-30
3787920M1	70-185
	70-190
	70-195
3788045M1	10-155
	10-160
	10-165
3788068M1	20-20
3788160M2	80-15
3788163M1	10-195
	10-200
3788193M1	10-20
3788222M1	10-130
	110-120
	110-125
3788224M1	110-120
	110-125
3788231M91	120-30
3788232M91	120-30
3788364M2	120-40
3788365M2	120-40
3788367M2	120-40
3788368M1	120-40
3788369M1	120-40
3788381M2	10-180
	10-185
3788385M93	120-40
3788386M93	120-40
3788403M91	40-20
3788405M1	40-20
3788407M1	40-20

3788414M1	40-20
3788415M1	40-20
3788452M2	25-95
3788460M1	120-40
3788461M1	120-40
3788462M1	120-40
3788465M2	120-40
3788537M1	40-25
3788565M1	40-45
3788573M1	130-10
3788574M2	130-35
3788617M1	10-190
3788699M93	120-25
	120-30
3788718M1	30-5
	30-15
3788734M1	70-120
3788754M1	70-40
3788950M91	110-140
3789029M1	130-20
3789032M1	60-40
	60-65
	60-70
3789035M1	10-170
	10-175
3789077M1	130-65
3789078M1	130-65
3789236M1	110-245
3789249M1	10-180
3789258M1	10-5
3789287M1	10-210
	10-215
	10-220
	10-225
3789315M1	10-170
3789379M1	70-125
3789398M91	40-45
3789399M91	40-45
3789400M1	40-55
3789401M1	40-55
3789441M1	60-40
	60-65
	60-70
3789475M1	60-40
	60-65
	60-70
3789486M1	110-70
3789513M1	10-230
3789540M1	40-20
3789701M1	120-35
3789721M1	70-25
3789725M92	70-15
3789732M1	80-25
3789733M2	10-155
	10-160
	10-165
	80-25
3789861M1	10-10
3789862M1	10-10
3789904M2	110-10
3789905M4	110-10
3789906M2	110-10
3789925M96	110-90
3789926M96	110-90
3789927M95	110-90
3789928M93	110-90
3789956M1	40-35
3789957M2	40-35
3789983M91	10-10
	10-15
3790004M1	40-55
3791968M1	130-60
3792034M1	40-20
	40-55
	40-65
	40-70
	40-75
	60-15
3792237M1	40-60
3792488M2	130-60
3792609M1	40-50
3792734M1	70-225
	70-230
	70-235
3793414M1	40-65
3793729M1	70-185
	70-190
	70-195
3794411M91	40-55
3794472M91	40-55
3795141M1	40-75
3795142M1	40-75
3795143M1	40-75
3795530M1	40-75
3796026M8	70-200
	70-205
	70-210
	70-215
3796027M8	70-200
	70-205
	70-210
	70-215
3796028M2	70-200
	70-205
	70-210
	70-220
3796110M1	70-200
	70-205
	70-210
3796179M2	70-200
	70-205
	70-210
3796211M91	40-25
3796241M97	90-65
3796260M2	70-225
	70-230
	70-235
	70-240
3796261M1	70-240
3796262M1	70-240
3796263M1	70-240
3796264M1	70-240
3797125M1	40-85
3797129M1	70-250
3797284M1	70-215
3797361M1	40-85
3798993M1	40-35
3799466M1	70-210
3799724M1	70-200
3799725M1	70-205
3804662M1	110-40
3804663M1	110-40
3806376M1	110-55
3806618M91	110-190
3808023M91	10-135
3808024M2	10-135
3808500M2	100-35
	100-40
3808550M3	100-35
	100-40
3808555M2	100-35
	100-40
3808558M3	100-35
	100-40
3808561M3	100-35
	100-40
3808567M2	100-35
	100-40
3809347M1	120-10
3809661M1	70-5
3809798M1	80-10
3810017M1	10-5
3810054M1	100-35
	100-40
3810912M91	110-80
3814812M1	80-40
3814902M1	10-5
3814980M1	110-85
3817055M1	70-5
3817218M1	110-65
3819644M1	40-55
3820729M1	10-130
3820742M1	110-115
3820743M1	110-115
3821964M1	110-65
3823089M1	110-75
3823236M1	70-50
3823621M91	10-5
	10-20
3824109M1	110-70
3824482M91	70-120
385300020130	60-75
	60-80
	60-100
	60-105
385361X1	110-40
	110-55
	110-100
	110-105
	110-110
385362X1	10-170
	70-180
	110-10
	110-190
385363X1	30-5
	30-15
385365X1	40-75
	40-85
	60-5
	60-25
	60-30
	60-65
3900383M1	110-180
390039X1	40-115
3900862M1	40-115
3901147M91	10-175
3901152M91	10-175
3901153M1	10-175
3901154M1	10-175
3901155M1	10-175
3901157M1	10-175
3901162M1	10-175
390122X1	10-135
	10-170
3902090M1	110-130
	110-135
3902116M1	110-40
3902121M4	110-40
3902122M1	110-40
	110-45
3902128M1	110-50
3902129M1	110-50
	110-55
3902130M1	110-45
3902131M1	110-45
3902133M1	110-45
3902135M92	110-55
3902136M2	110-55
3902137M1	110-55
3902140M1	110-55
3902144M1	110-45
3902145M1	110-40
	110-50
	110-55
3902149M1	110-45
3902150M1	110-45
3902174M91	110-165
3902175M91	110-165
3902176M91	110-165
3902320M1	110-130
	110-135
3902322M1	110-130
	110-135
3902327M1	110-130
	110-135
3902329M2	110-130
	110-135
3902331M92	110-130
	110-135
3902332M1	110-130
	110-135
3902334M91	110-130
	110-135
3902356M91	110-40
3902365M1	110-40
	110-50
	110-55
	110-65
3902366M1	110-40
3902367M1	110-40
	110-50
3902370M91	110-40
3902372M1	110-40
3902373M93	110-45
3902411M1	110-40
3902414M1	110-40
3902415M1	110-40
3902440M1	90-20
3902455M1	110-50
	110-80
390246X1	60-40
	110-110
3902500M1	110-130
	110-135
3902503M91	110-45
3902550M1	110-130
	110-135
3902578M1	70-5
3902584M91	110-40
3902773M1	110-40
390287X1	110-225
	110-235
3903005M91	70-20
3903032M91	110-225
	110-235
3903034M1	110-225
	110-235
3903035M1	110-225
	110-235
3903038M91	110-225

3903039M91	110-225
	110-235
3903040M1	110-225
	110-235
3903044M1	110-225
	110-235
3903045M91	110-225
	110-235
3903050M1	110-225
3903051M91	110-225
	110-235
3903052M1	110-225
	110-235
3903054M1	110-225
	110-235
3903056M91	110-225
3903057M91	110-225
	110-235
3903060M91	110-225
3903065M1	110-225
	110-235
3903068M1	110-225
	110-235
3903093M1	110-220
3903106M1	110-220
	110-225
	110-230
	110-235
3903135M91	110-225
	110-235
3903136M1	110-235
3903186M1	110-40
3903187M1	110-40
3903189M1	110-50
3903200M1	110-40
3903216M1	70-220
3903255M91	10-175
3903256M91	10-175
3903258M91	10-175
3903259M91	10-175
3903314M91	40-115
3903317M91	40-115
3903452M1	90-20
3903455M1	70-240
3903456M1	70-240
3903457M1	70-240
3903458M1	70-240
3903459M1	70-240
3903460M1	70-240
3903462M1	70-240
3903463M91	70-240
3903464M1	70-240
3903465M1	70-240
3903480M1	110-235
3903504M1	110-40
3903512M2	40-110
3903520M1	40-110
3903605M1	110-220
	110-230
3903607M1	110-220
	110-230
3903631M1	110-220
3903632M1	110-220
3903634M1	110-220
3903761M1	10-20
3903788M1	110-220
3903806M1	110-230
3903814M91	110-235
3903817M91	110-235
3903822M91	110-235
3903823M1	110-235
3903824M1	110-235
3903827M91	110-235
3903839M1	60-10
3903840M1	60-10
3903841M1	60-10
3903843M1	110-230
3903845M1	20-20
3903856M1	70-215
3903864M91	70-215
3903869M92	70-215
3903898M1	130-25
3903899M1	130-25
3903902M1	130-25
3903947M91	40-45
3903948M91	40-45
3903954M91	40-45
3903960M1	70-220
3903963M1	110-220
3903970M1	110-230
3903972M91	70-240
3903995M1	40-25
3904087M1	110-225
	110-230
	110-235
3904089M1	110-220
390419X1	10-195
	10-200
	100-20
	110-5
	110-10
3904275M1	110-220
	110-230
3904295M2	110-130
3904319M1	110-130
	110-135
3904328M1	110-130
	110-135
3904360M1	10-20
3904361M91	10-20
3904362M91	10-20
3904363M91	10-20
3904364M91	10-20
3904365M91	10-20
3904366M91	10-20
3904442M91	110-220
	110-230
3904445M91	110-225
3904487M1	110-190
3904488M1	110-195
3904491M1	110-190
3904492M1	110-200
3904493M1	110-200
3904589M1	110-130
3904668M1	70-215
390468X1	20-20
390469X1	90-30
	100-5
	100-10
	110-80
	120-15
	120-30
390538X1	40-25
390597X1	10-155
	10-160
	10-165
	40-20
	70-120
	110-10
3907059M91	10-175
3907060M1	10-175
3907061M91	10-175
3907062M91	10-175
3907063M91	10-175
3907064M1	120-25
3907075M1	120-30
3907077M1	120-30
3907078M1	120-30
3907102M91	110-200
3907103M1	110-195
	110-200
3907104M1	110-200
3907108M1	110-195
3907109M1	110-195
3907121M1	110-220
	110-230
3907122M1	110-220
3907123M92	110-220
	110-230
3907124M1	110-220
	110-230
3907125M91	110-220
	110-230
3907126M91	110-220
	110-230
3907132M1	110-220
3907136M1	110-230
3907139M1	110-230
3907140M1	110-230
3907168M91	120-40
3907186M91	10-15
3907187M1	10-15
3907188M91	10-15
3907190M91	10-15
3907191M1	10-15
3907192M91	10-15
3907193M91	10-15
3907246M1	80-5
3907247M1	80-5
3907250M1	90-20
3907252M91	90-35
3907253M1	90-35
3907255M1	80-5
	90-35
3907256M91	90-35
3907271M1	80-45
3907279M92	70-250
3907280M91	120-25
	120-30
3907282M1	110-145
3907283M1	110-145
3907284M1	110-145
3907285M1	110-145
3907296M1	110-130
3907297M91	110-130
	110-135
3907298M91	110-130
	110-135
3907299M91	110-130
3907300M1	110-130
3907301M1	110-130
	110-135
3907302M1	110-130
	110-135
3907303M1	110-130
	110-135
3907304M1	110-130
3907305M1	110-130
3907306M1	110-130
	110-135
3907307M1	110-130
	110-135
3907310M1	110-135
3907312M1	110-135
3907313M1	110-135
3907314M1	110-135
3907315M1	110-135
3907316M1	110-135
3907336M91	70-160
3907337M91	70-160
	70-165
3907340M91	70-220
3907341M91	70-220
3907342M1	70-220
3907344M1	70-220
390734X1	10-135
	10-155
	10-160
	10-165
	10-195
	10-200
	20-15
	20-20
	70-5
	70-125
	100-15
	100-20
	110-190
	130-20
	130-30
390735X1	10-180
	10-210
	10-215
	10-220
	10-225
	70-40
	70-130
	70-135
	100-20
	110-220
	110-230
	130-20
	130-30
3907383M1	120-30
3907384M1	120-30
3907385M1	120-30
3907402M91	70-10
3907403M91	70-10
3907404M91	70-10
3907405M91	70-10
3907421M91	30-5
	30-15
3907422M91	80-15
3907423M91	80-15
3907425M1	10-165
3907427M1	70-45
3907427M91	60-40
	60-65
	60-70
3907428M1	70-125
3907429M91	70-125

3907430M1 40-105
70-130
70-135
3907461M1 70-170
3907462M1 70-170
3907463M91 70-175
3907464M91 70-175
3907465M1 70-175
3907466M91 70-175
3907467M91 70-175
3907468M91 70-175
3907469M91 70-175
3907481M1 110-35
3907487M91 70-160
3907530M1 25-95
3907532M91 80-5
3907533M91 110-150
3907537M1 110-35
3907550M91 110-160
3907551M1 110-20
3907555M1 130-25
3907557M1 90-25
3907575M91 110-160
3907585M1 110-20
3907586M1 110-20
3907587M91 70-150
3907588M1 70-150
3907589M1 70-150
3907590M1 70-150
3907591M1 70-150
3907594M91 110-235
3907614M91 70-125
3907615M1 70-125
3907617M91 70-160
3907618M91 70-160
3907619M91 70-160
3907620M91 70-160
70-165
3907621M91 70-160
70-165
3907642M1 110-145
3907659M1 70-160
3907688M1 60-55
60-60
3907703M1 70-160
3907807M91 20-20

3907820M1 70-185
70-190
70-195
3907821M1 70-185
70-190
70-195
3907822M91 30-10
30-20
3907823M91 70-55
3907824M91 30-10
3907825M91 70-160
70-165
3907826M91 70-160
70-165
3907829M1 70-185
70-190
70-195
3907830M1 70-185
70-190
70-195
3907831M1 90-20
3907837M91 30-10
30-20
3907838M91 30-10
30-20
3907840M91 30-10
30-20
3907841M91 30-10
3907882M91 70-165
3907905M1 70-55
3907906M1 30-10
30-20
3907908M91 70-160
70-165
3907909M1 110-145
3907910M91 70-165
390809X1 100-20
130-20
130-30
390864X1 110-10
390916X1 10-140
70-245

390971X1 10-165
10-170
10-210
20-20
30-5
30-15
40-40
70-35
70-40
70-125
70-225
70-230
70-235
90-40
90-45
90-55
90-70
90-75
100-5
100-10
100-15
100-30
110-140
120-30
120-45

390972X1 10-5
10-135
10-155
10-160
10-165
10-170
10-180
10-190
10-195
10-200
10-210
10-215
10-220
10-225
10-235
20-20
30-5
30-15
60-40
60-65
60-70
70-35
70-185
70-190
70-195
70-225
70-230
70-235
90-25
90-40
90-45
100-15
100-25
110-215
110-245
390973X1 70-5
130-25
390974X1 70-225
70-230
70-235
390975X1 40-115
60-15
390995X1 100-5
100-10

391001X1 10-210
10-215
10-220
10-225
391006X1 10-5
391025X1 110-40
110-55
391026X1 110-190
391038X1 10-5
10-140
70-45
80-40
90-65
100-5
100-10
110-40
110-75
110-100
110-105
391039X1 10-5
70-25
70-35
110-65
110-100
110-105
110-110
110-115
110-150
110-220
110-230
120-40
391053X1 110-205
110-210
391074X1 10-220
40-40
70-35
70-225
70-230
70-235
100-5
100-10
391077X1 70-40
391120X1 10-150
110-10
391130X1 70-215
391212X1 110-10

391244X1 40-110
70-125
70-250
391269X1 10-135
391286X1 10-235
391289X1 110-40
110-55
391290X1 20-20
40-50
40-55
70-40
391329X1 40-115
391371X1 40-55
391565X1 110-220
110-225
110-230
110-235
391883X1 10-235
100-5
100-10
391884X1 100-15
391889X1 130-20
391914X1 110-5
110-10
391990X1 70-40
70-225
70-230
70-235
392235X1 10-235
392309X1 40-120
392310X1 20-20
392404X1 20-20
70-40
392463X1 10-235
392831X1 110-220
392882X1 10-155
10-160
10-165
392892X1 60-40
60-65
60-70

NUMERICAL INDEX
INDEX NUMERIQUE
NUMMERN-INDEX
INDICE NUMERICO
INDICE NUMERICO

G 12

394367X1	10-210
	10-215
	10-220
	10-225
	10-235
	40-70
	70-25
	70-40
	70-250
	90-25
	110-10
	110-40
	110-100
	110-105
	110-110
	110-245
	120-5
	120-10
	120-35
	120-40
395100600020	70-100
395100600040	70-100
409965M1	80-75
411101090201	25-85
411301050040	20-20
4270018M1	10-205
4270022M3	60-5
4270054M1	10-170
4270055M3	10-170
4270098M1	10-120
4270162M2	80-15
4270169M1	10-120
4270172M1	10-120
4270192M1	20-20
4270193M1	20-20
4270255M1	25-95
4270273M1	110-200
4270319M1	10-170
4270451M1	70-45
4270462M1	10-120
4270508M3	10-230
4270509M2	10-230
4270510M1	10-230
4270514M1	110-80
4270526M1	130-15
4270570M98	70-35
4270576M2	70-35
4270577M2	70-35
4270579M1	110-245
4270581M1	110-245
4270583M1	110-245
4270599M2	70-35
4270649M1	40-65
4270650M91	40-65
4270652M1	40-65
4270709M1	110-70
4270710M1	110-70
4270711M1	110-70
4270719M4	10-230
4270720M3	70-250
4270726M1	10-220
	10-225
4270738M91	100-20
4270739M91	100-20
4270768M2	70-40
4270770M4	70-35
4270773M1	70-40
4270774M1	70-35
	70-45
	70-55
4270811M1	40-20
4270814M1	10-235
4270844M1	80-10
	80-40
4270867M92	110-95
4270886M91	110-70
4270890M91	110-95
4270894M92	110-70
4270896M91	110-70
4270898M91	110-80
4270900M93	110-80
4270902M93	110-85
4270970M3	25-100
4270984M1	110-80
4270986M1	110-70
	110-80
4270987M1	110-80
4270988M1	110-80
4271010M91	110-245
4271013M92	110-245
4271015M92	110-245
4271023M3	60-65
4271027M1	110-75
4271028M1	120-45
4271063M5	70-35
4271078M1	110-5
	110-10
4271109M1	40-55
4271111M1	110-75
4271112M1	110-75
4271129M1	110-125
4271130M1	110-145
4271132M1	25-95
	110-145
4271133M1	110-75
4271147M1	110-100
4271148M1	110-100
4271161M1	110-145
4271167M2	25-105
4271217M91	40-25
4271219M91	40-25
4271221M1	40-25
4271222M1	40-25
	40-30
4271223M1	40-25
	40-30
4271224M1	40-25
	40-30
4271225M1	40-25
	40-30
4271236M2	70-35
4271289M1	20-15
4271320M1	10-235
4271327M92	90-80
4271331M1	70-15
4271337M2	80-15
4271338M2	80-15
4271342M1	80-10
4271343M1	80-10
4271344M1	110-160
4271345M1	110-200
4271346M1	80-15
4271347M1	80-15
4271348M2	80-15
4271349M2	80-15
4271350M1	80-15
4271351M2	80-15
4271358M1	80-10
4271369M3	70-250
4271408M2	25-95
	80-35
4271481M92	110-95
4271488M1	110-95
4271499M1	110-85
4271510M94	110-95
4271512M3	110-95
4271528M1	110-245
4271554M1	120-35
4271557M1	40-25
	40-30
4271558M1	80-10
4271561M1	110-10
4271564M91	40-20
4271567M1	110-65
4271570M92	40-85
4271572M91	40-55
4271598M2	70-40
4271601M1	40-85
4271602M1	40-55
4271654M1	10-140
4271729M1	130-40
4271798M3	10-230
4271799M1	80-25
	80-40
4271800M1	80-40
	120-50
4271801M1	80-25
	80-30
	80-40
	120-50
4271802M1	80-25
	80-40
4271803M1	80-40
	90-50
4271809M1	20-20
4271819M1	40-20
4271842M1	80-30
	80-40
4271865M2	110-200
4271907M1	20-20
4271912M1	110-80
4271913M1	80-40
4271915M1	100-45
4271916M2	80-10
4271925M1	80-15
4271987M1	20-20
4271989M1	80-40
4271990M1	80-40
4271991M1	80-40
4272050M1	110-120
	110-125
4272110M1	70-170
	70-175
4272111M2	70-180
4272115M2	70-25
4272151M3	80-90
4272209M1	70-15
4272346M2	40-65
4272347M2	80-90
4272431M1	80-25
	80-30
	80-40
	120-50
4272432M1	80-40
4272519M94	110-215
	110-220
	110-225
4272523M94	110-215
	110-230
	110-235
4272528M1	110-240
4272529M1	110-240
4272534M1	110-175
	110-180
	110-185
4272566M1	120-30
4272612M92	110-215
4272615M92	70-40
4272621M1	70-40
4272627M4	70-35
4272687M2	110-85
4272688M1	110-85
4272746M1	120-15
4272772M2	110-40
4272773M3	110-40
4272774M1	110-40
	110-45
4272775M1	110-40
	110-45
4272777M2	10-210
	10-215
	10-220
	10-225
4272778M1	20-20
4272782M91	120-25
	120-30
4272783M92	120-25
	120-30
4272808M1	60-70
4272811M4	10-5
4272835M2	110-145
4272839M94	110-115
	110-130
4272840M92	110-115
	110-135
4272841M1	110-125
4272846M1	80-90
4273003M92	110-10
4273141M2	10-210
4273192M3	110-70
4273193M1	110-35
4273198M1	110-35
4273244M91	120-40
4273245M91	120-40
4273260M1	80-15
4273261M1	80-15
4273269M1	10-170
4273311M1	120-15
4273312M1	120-15
4273315M91	110-10
4273332M92	110-10
4273333M1	10-130
4273336M1	110-10
	110-30
4273474M92	130-20
	130-30
4273475M92	130-20
	130-30
4273495M93	70-5
	70-10
4273509M2	25-95
4273518M1	110-45
4273519M1	110-45
4273536M92	110-75
4273542M91	110-75
4273545M92	110-145
4273546M3	110-145
4273553M93	110-145
4273612M1	80-40
4273650M1	60-25
	60-30

4273651M93	60-60
4273668M2	130-20
	130-25
	130-30
4273669M2	130-20
	130-25
	130-30
4273670M1	130-20
	130-30
4273671M1	130-20
	130-30
4273672M1	130-20
	130-30
4273673M1	130-20
	130-30
4273674M1	130-20
	130-30
4273677M3	110-75
4273688M1	70-125
4273689M1	70-125
4273702M91	40-45
4273703M91	40-45
4273760M1	120-25
	120-30
4273761M2	120-25
	120-30
4273770M1	10-5
4273771M2	110-180
4274087M1	25-95
4274202M91	70-5
4274219M1	130-5
	130-10
	130-15
	130-35
	130-40
	130-45
	130-50
	130-55
4274223M1	110-5
	110-10
4274225M91	110-5
	110-10
4274233M1	10-5
4274249M1	70-125
4274252M2	40-115
4274265M1	10-135
4274275M91	100-30
4274301M1	110-30
4274331M1	110-15
4274333M1	120-40
4274350M1	110-10
4274355M2	80-25
4274518M1	10-155
	10-160
	10-165
4274519M3	10-155
	10-160
	10-165
4274520M1	10-155
	10-160
	10-165
4274545M1	70-170
4274546M91	70-170
4274547M91	70-180
4274551M1	70-25
4274558M1	70-145
4274560M1	70-170
4274562M3	70-185
	70-190
	70-195
	70-225
	70-230
	70-235
4274577M1	110-10
4274585M92	70-155
	70-160
4274587M91	30-5
	30-10
4274587M92	30-5
	30-10
4274610M1	110-155
4274616M92	110-65
4274618M1	110-65
4274622M1	110-50
	110-65
	110-160
4274627M91	110-65
4274633M91	110-65
4274634M1	110-65
4274635M1	110-65
4274636M91	110-65
4274637M91	110-65
4274638M92	110-65
4274659M1	110-65
4274714M1	100-30
4274715M1	100-30
4274718M2	100-30
4274719M1	100-30
4274735M1	110-170
4274740M2	100-20
4274741M94	100-20
4274753M2	70-35
4274755M2	80-20
	110-110
4274756M1	120-10
4274757M1	120-10
4274829M2	70-225
	70-230
	70-235
4274830M1	70-245
4274831M2	70-245
4274832M1	70-195
4274832M2	70-195
4274833M1	70-185
	70-190
	70-195
4274833M2	70-185
	70-190
	70-195
4274834M1	70-185
	70-190
	70-195
4274834M2	70-185
	70-190
	70-195
4274835M1	70-185
	70-190
	70-195
4274835M2	70-185
	70-190
	70-195
4274836M1	70-185
	70-190
	70-195
4274836M2	70-185
	70-190
	70-195
4274837M1	70-185
	70-190
	70-195
4274837M2	70-185
	70-190
	70-195
4274838M1	70-185
	70-190
	70-195
4274838M2	70-185
	70-190
	70-195
4274839M1	70-185
	70-190
	70-195
4274839M2	70-185
	70-190
	70-195
4274840M1	70-185
	70-190
	70-195
4274840M2	70-185
	70-190
	70-195
4274903M2	30-5
	30-15
4274910M3	10-185
4274911M2	100-20
4274912M2	100-20
4274917M2	100-20
4274918M1	100-20
4274927M2	110-5
4274928M1	110-5
4274946M1	10-155
	10-160
	10-165
4274957M1	100-20
4274968M1	110-10
4274969M1	110-10
4274970M1	110-10
4274971M1	110-10
4274972M1	70-190
	70-195
4274972M2	70-190
	70-195
4274973M1	70-190
	70-195
4274973M2	70-190
	70-195
4274974M1	70-195
4274974M2	70-195
4274975M1	70-185
	70-190
	70-195
4274977M1	70-225
	70-230
	70-235
4274980M1	70-245
4274981M1	70-140
4274982M1	70-140
4274983M1	70-140
4274984M1	70-140
4274985M1	70-50
4274986M1	70-50
4274987M2	70-185
	70-190
	70-195
4274990M2	70-185
	70-190
	70-195
4274991M1	70-195
4274992M1	70-195
4274993M1	70-195
4274995M1	70-245
4274996M1	70-50
4274997M1	70-50
4274998M1	70-50
4274999M1	70-50
4275000M1	70-50
4275001M2	10-220
	10-225
4275007M1	10-165
4275041M2	110-80
	110-245
4275043M1	120-15
4275049M1	110-160
4275050M1	110-160
4275051M1	110-160
4275053M1	110-150
4275054M1	110-150
4275055M1	110-150
4275056M2	110-150
4275057M1	10-155
	10-160
	10-165
4275070M3	70-120
4275085M2	20-20
4275094M1	70-45
4275095M1	70-45
4275096M2	70-45
4275097M1	70-45
4275098M1	70-45
4275099M1	20-20
4275100M1	70-45
4275106M2	10-155
	10-160
	10-165
4275108M1	10-170
4275132M1	110-115
	110-120
	110-125
4275137M1	110-70
	110-95
4275163M1	110-65
4275168M2	100-30
4275226M93	110-205
4275229M2	10-140
4275232M1	100-35
	100-40
	100-45
4275242M92	110-40
4275243M93	110-40
4275245M1	10-185
4275285M2	100-45
4275294M1	10-5
4275463M93	100-25
4275483M1	70-35
4275484M1	70-35
4275485M1	70-35
4275486M1	70-35
4275488M2	10-155
	10-160
4275493M93	10-135
4275495M92	10-140
4275544M1	10-165
4275550M1	70-190
4275551M1	70-185
4275552M1	70-190
4275553M1	70-185
4275554M1	70-190
4275555M1	70-185
4275556M1	70-230
	70-235

4275557M1	70-225	4275825M92	110-20	4276127M1	70-25	4276222M3	10-170	4276769M91	80-30	4277275M1	110-100
	70-230	4275839M1	110-50	4276128M1	70-170	4276396M1	110-20	4276770M94	80-65		110-105
4275558M1	70-130		120-35	4276129M1	70-170	4276397M1	110-20	4276778M91	110-115	4277365M92	25-105
	70-135	4275846M1	120-35	4276130M1	70-145	4276408M1	10-155		110-120	4277366M2	80-15
4275559M2	70-170	4275847M92	40-50	4276131M1	40-15		10-160		110-125	4277367M2	80-15
4275565M2	70-50	4275848M92	40-50	4276132M1	70-125		10-165	4276810M1	40-115	4277370M2	25-95
4275566M1	40-100	4275874M91	110-15	4276133M1	70-125	4276409M1	10-155	4276811M4	40-115	4277373M1	10-130
4275570M1	70-180	4275897M1	110-10	4276134M1	40-15		10-160	4276812M4	10-5	4277411M3	70-120
4275571M3	70-130	4275903M94	80-40	4276135M1	40-15		10-165	4276813M1	110-85	4277412M2	70-45
4275571M4	70-135	4275909M1	110-20	4276136M1	40-15	4276446M1	110-40	4276819M1	100-30	4277422M1	70-120
4275572M91	70-170	4275910M2	110-30	4276136M2	40-15	4276447M1	110-40	4276825M1	80-40	4277426M1	40-100
4275573M1	70-180	4275914M1	110-20	4276137M3	40-15	4276448M1	110-40	4276864M3	110-85	4277427M1	40-100
4275574M1	70-170	4275916M1	110-20	4276141M2	70-120	4276449M1	110-40	4276867M1	110-85	4277428M2	40-105
4275575M1	70-180	4275921M1	110-20	4276142M2	70-120	4276474M1	70-35	4276881M3	10-5	4277434M91	80-30
4275576M1	70-170	4275922M1	110-20	4276144M2	70-120	4276478M2	70-35	4276942M3	10-135	4277435M91	80-40
4275577M91	70-125	4275937M1	110-30	4276146M2	60-35	4276485M1	10-190	4276949M1	10-135	4277436M93	90-85
4275578M1	70-125	4275938M1	110-30	4276147M1	70-130	4276500M1	110-245	4276955M92	110-70	4277437M95	90-10
4275579M2	70-125	4275939M1	110-30		70-135	4276502M1	110-35	4276982M91	30-15	4277459M98	90-25
4275580M1	70-225	4275942M1	110-25	4276148M1	70-130	4276513M2	10-155		30-20	4277461M92	90-25
	70-230	4275943M91	110-25		70-135		10-160	4276982M92	30-15	4277471M1	10-135
	70-235	4275944M1	110-25	4276149M1	70-130		10-165		30-20		10-140
4275582M2	10-135	4275947M1	110-15		70-135	4276643M1	70-235	4276983M91	120-25	4277474M1	90-25
4275583M2	10-135		110-25	4276150M1	70-130	4276644M1	70-125	4277060M1	120-20	4277489M5	10-210
4275585M94	100-25	4275950M1	110-15		70-135	4276645M1	40-105		120-45		10-220
4275605M1	10-135	4275951M1	110-15	4276151M1	70-130		70-130	4277061M91	40-75	4277490M2	10-210
4275620M1	110-5	4275963M1	110-15		70-135		70-135	4277104M1	110-95		10-220
	110-10		110-20	4276152M3	70-45	4276648M1	70-125	4277120M1	70-35	4277495M1	110-150
4275637M2	110-205	4275966M93	110-210	4276153M1	30-5	4276649M1	70-225	4277149M5	10-210	4277496M1	110-150
	110-210	4275977M1	110-25		30-15		70-230		10-215	4277509M1	60-40
4275653M2	10-135	4275985M1	110-70	4276154M1	70-145		70-235	4277182M1	70-230		60-65
4275670M1	70-45		110-80	4276155M1	70-45	4276652M1	70-170	4277183M1	70-225		60-70
4275670M2	70-45		110-175	4276156M1	70-45	4276666M1	70-125	4277192M1	70-225	4277510M1	60-40
4275671M2	70-45		110-180	4276157M1	70-45	4276668M1	70-170		70-230		60-65
4275683M2	60-70		110-185	4276158M2	70-45	4276681M1	30-5		70-235		60-70
4275691M3	70-120	4276062M96	110-5	4276159M2	20-20		30-15	4277193M1	70-245	4277512M2	10-140
4275692M2	70-120	4276063M96	110-5	4276160M2	40-110	4276742M3	70-120	4277197M1	70-140	4277531M91	110-25
4275693M2	40-100	4276068M1	90-55	4276161M2	40-110	4276743M3	70-120	4277199M1	70-180	4277532M91	110-25
	70-120	4276118M1	10-190	4276166M2	70-245	4276744M4	70-120	4277200M2	70-155	4277540M2	90-40
4275698M1	80-40	4276119M2	10-190	4276167M1	70-245	4276745M4	70-120	4277202M3	10-180		90-45
4275724M2	90-55	4276120M1	70-180	4276167M2	70-245	4276746M3	40-110	4277205M91	80-30	4277640M91	90-25
4275771M1	10-165	4276121M1	70-180	4276168M1	40-100	4276747M3	40-110	4277206M1	90-50	4277643M1	90-25
4275809M91	40-30	4276122M1	70-180	4276170M1	40-15	4276748M3	40-110	4277219M94	90-25	4277644M1	90-25
4275810M1	40-30	4276123M1	70-145	4276186M1	10-155	4276749M3	40-110	4277269M92	80-45	4277656M1	110-70
4275811M91	40-30	4276124M1	70-25		10-160	4276751M2	70-120	4277271M91	80-45	4277658M1	10-5
4275812M91	110-25	4276125M1	70-25		10-165	4276754M1	70-45	4277274M1	110-100	4277660M1	10-5
4275814M91	110-20	4276126M3	70-25	4276219M1	60-70	4276763M92	90-70		110-110	4277662P92	10-5
4275824M92	110-20	4276126M4	70-25	4276220M1	60-70	4276768M91	80-30			4277707M92	10-195

4277714M1	10-135
4277715M1	10-135
4277720M1	10-135
4277732M91	25-105
4277733M91	25-105
4277809M91	110-120
	110-125
4277810M92	110-120
	110-125
4277817M1	10-130
4277850M1	80-40
4277900M1	80-35
4278049M1	100-25
4278051M1	10-170
4278053M1	10-170
4278054M4	10-170
4278055M1	10-170
4278077M1	20-20
4278095M1	100-15
4278100M1	40-110
4278174M1	100-15
4278207M2	10-195
	10-200
4278221M4	10-170
4278222M91	10-195
	10-200
	10-205
4278264M1	70-225
	70-230
	70-235
4278265M1	70-225
	70-230
	70-235
4278266M1	70-185
	70-190
	70-195
4278267M1	70-155
4278268M1	20-10
4278269M91	70-125
4278281M1	10-185
4278304M3	10-155
	10-160
	10-165
4278305M2	10-155
	10-160
	10-165
4278306M1	10-155
	10-160
	10-165
4278314M1	25-95
	80-60
	90-60
4278318M2	40-110
4278335M2	10-140
4278347M1	40-110
4278348M1	40-110
4278351M1	10-155
	10-160
	10-165
4278368M1	70-155
	70-160
	70-165
4278403M91	80-55
4278475M3	40-110
4278476M1	40-100
4278477M1	40-100
4278478M1	40-100
4278481M1	40-100
4278482M2	40-110
4278484M1	40-105
4278550M1	100-5
4278565M1	10-205
4278566M1	10-185
4278589M2	10-220
	10-225
4278631M1	10-205
4278652M1	30-5
	30-15
4278661M93	90-5
	90-20
4278663M2	25-95
4278720M1	80-30
	90-50
	90-65
4278721M1	90-85
	90-90
4278756M3	80-70
4278758M1	10-155
	10-160
	10-165
4278782M3	10-155
	10-160
	10-165
4278783M1	110-10
4278784M2	110-10
4278785M2	110-10
4278791M91	90-25
4278794M91	90-25
4278827M92	110-5
	110-10
4278844M1	20-20
4278849M1	70-120
4278885M1	10-220
	10-225
4278886M2	10-220
	10-225
4278897M1	10-220
	10-225
4278937M91	80-55
4278950M92	10-235
4278965M2	10-135
	10-140
4278975M92	80-70
4278995M1	90-65
4278996M1	90-65
4278997M1	90-65
4279002M1	10-135
4279012M2	10-135
4279013M93	110-10
4279014M93	110-10
4279099M92	110-70
4279099M93	110-70
4279102M91	110-70
4279105M92	110-85
4279108M92	110-85
4279114M91	110-80
4279117M91	110-80
4279120M91	110-80
4279123M91	110-80
4279126M91	110-80
4279129M91	110-80
4279179M1	120-45
4279180M1	120-45
4279182M3	110-110
4279183M3	110-110
4279184M3	110-110
4279185M3	110-110
4279186M1	110-110
4279187M1	110-110
4279200M2	110-110
4279238M91	100-15
4279248M1	40-110
4279250M1	40-110
4279253M1	40-110
4279254M1	40-110
4279271M1	40-110
4279273M1	40-110
4279275M1	40-110
4279276M1	40-110
	70-30
4279279M2	10-165
4279293M1	70-120
4279304M91	110-70
4279533M1	110-5
	110-10
4279537M2	70-250
4279578M2	10-135
4279582M1	10-135
4279591M1	10-135
4279592M1	10-140
4279661M1	70-120
4279690M1	110-10
4279811M2	70-120
4279812M1	70-120
4279814M1	70-120
4279816M1	70-25
4279819M1	70-120
4279820M1	70-120
4279824M2	70-120
4279824M3	70-120
4279847M5	10-170
4279871M91	110-80
4279874M3	25-95
4279876M92	25-95
4279911M1	70-155
4279923M94	110-35
4279924M94	110-35
4279925M1	110-40
4279927M1	25-95
4279929M1	25-95
4279936M1	10-185
4279945M1	110-10
4279957M1	40-60
4280003M3	40-115
4280004M1	40-115
4280005M1	40-115
4280008M92	60-5
4280009M92	60-5
4280010M1	10-170
4280036M1	10-155
	10-160
	10-165
4280067M2	10-170
4280070M1	10-195
4280072M3	10-195
	10-200
4280078M91	110-245
4280079M91	110-245
4280117M1	60-40
	60-65
4280118M1	60-40
4280118M4	60-65
	60-70
4280120M1	60-20
4280122M12	60-25
	60-30
4280123M2	60-25
	60-30
4280128M91	60-40
	60-65
	60-70
4280129M1	60-40
	60-65
	60-70
4280179M1	90-25
4280199M1	25-95
4280254M1	25-95
4280256M1	25-95
4280260M1	80-55
	80-60
4280288M3	40-120
4280361M2	60-25
	60-30
4280362M2	60-30
4280363M2	60-30
4280413M1	60-25
4280414M1	80-40
4280415M1	80-40
4280416M2	80-40
4280417M1	80-40
4280418M2	80-40
4280419M1	80-40
4280425M1	60-25
	60-30
4280428M3	10-145
	10-150
4280429M2	10-145
4280473M1	130-20
	130-30
4280475M1	130-20
	130-30
4280507M1	60-35
4280509M1	100-15
4280513M1	40-100
4280535M2	40-15
4280546M1	70-150
4280568M1	80-60
4280575M3	10-210
	10-220
4280581M1	10-10
4280582M1	10-10
4280586M2	100-20
4280587M1	100-20
4280588M1	100-20
4280614M1	110-70
4280632M1	130-35
4280633M1	130-55
4280636M1	10-235
4280659M1	10-5
4280681M1	10-185
4280688M1	110-65
4280784M91	60-5
4280841P91	110-100
	110-110
4280885M1	110-110
4280897M1	10-220
4280935M1	110-100
	110-105
	110-110
4280936M2	30-5
	30-15
4280949M1	90-75
4280988M1	100-30
4280989M1	100-30
4280994M2	90-5
4281035M2	10-195
4281038M93	40-115
4281078M1	10-5
4281086M1	10-195
4281310M1	10-210
	10-215

4281343M1	25-95	4284155M1	90-50	4286540M1	40-110	4288241M1	110-5	4300879M1	70-240	5017894M2	120-5
4281344M1	10-195	4284168M1	100-35	4286558M1	70-120		110-10	4303393M1	40-25		120-10
4281367M1	70-150		100-40	4286571M1	70-45	4288244M91	110-5	4303395M1	40-45	5017895M2	120-5
4281368M1	70-150	4284627M2	80-20		70-135		110-10		40-115		120-10
4281373M1	10-185	4284628M2	80-20	4286572M1	70-135	4288301M1	90-50	5015117M1	10-185	5017896M1	100-10
4281389M1	100-15	4284629M1	80-15	4286573M1	70-45	4288320M1	10-150	5015252M1	10-160	5017897M1	100-10
4281422M1	100-15		80-20		70-135	4288321M1	10-150		10-165	5017899M3	100-5
4281425M1	60-5	4284630M1	80-20	4286574M1	70-135	4288361M1	10-150	5015331M1	10-130		100-10
4281518M1	70-150	4284633M1	40-110	4286579M1	70-45	4288397M1	10-200	5015565M1	60-5	5017908M1	100-5
4281604M1	80-30		70-245	4286580M1	70-45	4288418M1	60-65	5016023M2	100-15		100-10
4281605M1	90-60	4284699M1	25-95	4286581M1	70-45		60-70	5016024M2	100-15	5017909M1	100-5
4281635M1	70-30	4284917M1	10-195	4286589M1	10-210	4288562M2	10-215	5016190M1	10-185		100-10
4281636M4	70-30		10-200		10-215		10-225	5016204M1	100-35	5017921M3	100-5
4281637M2	70-30	4285025M1	130-20	4286590M1	10-210	4288688M1	10-5		100-40		100-10
4281854M1	70-150		130-30		10-215	4288713M2	10-5	5016264M1	100-35	5017922P3	100-5
4281990M1	70-225	4285103M1	10-5	4286592M1	70-45	4288714M2	10-5		100-40		100-10
	70-230	4285237M11	60-30	4286593M2	70-45	4289049M1	110-35	5016451M1	100-20	5017930P91	110-60
	70-235	4285282M1	70-180	4286628M91	40-20	4289071M3	10-125	5016517M1	100-15	5017936M1	110-65
4281999M1	80-55	4285302M1	60-40	4286638M1	40-20		10-195	5016552P94	10-5	5017937M1	110-65
	80-60		60-65	4286639M91	40-20		10-200	5016552P95	10-5	5017938M1	110-65
4282000M1	80-55		60-70	4286640M1	40-20	4289116M2	10-125	5016579M1	100-15	5017951M91	110-170
	80-60	4285308M91	40-75	4286704M1	70-25		10-195	5016721M1	100-15	5017952M1	120-50
4282022M1	100-5	4285324M1	70-120	4286707M2	70-30		10-200	5016744M1	100-35	5017953M1	110-170
	100-10	4285325M1	70-120	4286708M1	40-110	4289857M1	70-145		100-40	5017954M1	120-50
4282050M1	10-140	4285379M1	70-20	4286717M1	70-120	4289939M1	10-140	5016791M1	100-15	5017955M1	120-20
4282089M1	90-45	4285462M2	40-15	4286941M1	90-90	4289963M1	10-140	5016796M92	100-15	5017956M1	120-20
4282163M1	70-225	4285547M1	110-240	4287063M1	90-15	4290252M1	10-125	5016797M2	100-15	5017957M1	120-45
	70-230	4285549M1	110-240	4287201M1	110-65	4290273M1	60-15	5016798M1	100-15	5017958M1	120-45
	70-235	4285759M91	110-170	4287297M92	70-155	4290274M1	60-15	5016800M1	100-15	502113D1	60-5
4282170M1	50-30	4285769M1	10-230		70-165	4290275M1	60-15	5016813M1	100-20	509816M3	130-60
4282204M2	25-95	4285770M1	10-230	4287334M1	90-50	4290279M1	60-15	5016817M1	100-20	514100600080	70-100
4282225M1	100-15	4285771M1	10-230	4287339M1	90-50	4290362M1	90-50	5016819M1	10-5	514100600090	70-100
4282254M1	10-130	4285772M1	10-230	4287356M1	90-50	4290813M1	110-170	5016831M1	10-5	523784M3	110-240
4282622M1	80-30	4285856M1	40-20	4287357M92	90-50	4291316M1	80-65	5016887M2	120-25	524860100100	30-75
4282740M94	80-25	4285938M2	100-10	4287641M1	130-50		80-70		120-30	621235M1	120-15
4282836M1	130-20	4285955M1	10-190	4287642M1	130-55	4291429M1	70-30	5017249M1	100-15		120-45
	130-30	4285982M1	10-210	4287653M1	60-30	4291458M1	100-35	5017257M1	100-15	656632M4	120-5
4282874M2	10-5		10-215	4287654M1	60-30	4291978M1	25-100	5017258M1	100-15		120-10
4282875M1	10-5	4286041M1	40-15	4287657M2	120-35	4291979M1	25-100	5017406M1	10-5	658081M2	60-40
4282877M1	10-5	4286065M1	10-190	4287875M1	90-50		70-15	5017813P95	100-15		60-65
4282943M2	110-65	4286128M92	10-125	4287910M92	10-125		80-15	5017825M2	100-15		60-70
4282944M1	80-50	4286332M1	10-145	4288065M3	10-125	4291980M1	25-100	5017829M93	100-5	70229210	10-185
4282980M1	90-30	4286389M1	10-200	4288200M91	110-5	4291981M1	80-15	5017889M1	10-5	70921230	120-25
	90-35	4286448M1	110-40		110-10	4291982M1	25-100	5017890M2	10-5		120-30
4282981M1	90-30	4286450M2	10-215	4288240M1	110-5	4291983M1	25-100	5017891M1	60-5	70921883	70-170
	90-35		10-225		110-10	4291984M1	25-100	5017892M94	100-10	70921886	70-170
4284059M1	110-65	4286536M91	60-15			4300878M1	70-240				

70935041	100-15
	100-20
71307132	100-15
716100090211	25-85
716100090270	25-85
	25-90
716100090710	25-85
716100490110	70-170
716100600091	70-105
716101081020	25-75
716101081030	25-75
716150150500	30-60
716150620060	70-115
716151220210	50-15
716501120030	40-75
716501120200	40-90
716501120620	40-70
716501120630	40-70
716860030080	30-70
716920010100	30-70
718100531020	25-70
718150220080	50-5
	50-10
72160887	100-15
72161441	100-20
72500822	80-30
72502409	10-5
72503125	100-35
	100-40
72504363	10-180
72509365	100-10
72512965	100-15
72513270	100-15
	100-20
72570001	100-50
7300101702	60-105
7300104401	60-85
7300104501	60-85
7300104601	60-80
7300104701	60-80
7300105101	60-80
7300105601	60-85
7300160101	60-80
7300604302	60-100
	60-105
7302461002	60-105
7302601101	60-110
7302601201	60-110
7302601801	60-110
7302601901	60-110
7302602001	60-110
7302602101	60-110
7450100301	60-100
	60-105
7450600901	60-100
7450661202	60-100
7500604201	60-75
7500604301	60-75
7500604401	60-100
	60-105
7500604501	60-100
7500604601	60-100
	60-105
7500604701	60-100
	60-105
7500604801	60-100
7500606002	60-100
	60-105
7500606101	60-100
	60-105
7500660002	60-100
7502461001	60-100
	60-105
7600101301	60-100
7600101401	60-75
7600101501	60-90
	60-95
7600101702	60-85
7600101801	60-85
7600101902	60-85
7600102002	60-85
7600102101	60-85
7600102201	60-85
7600102302	60-85
7600102401	60-85
7600102502	60-80
7600102602	60-80
7600102902	60-80
7600103101	60-85
7600103302	60-85
7600103402	60-85
7600103501	60-85
7600103701	60-85
7600104001	60-85
7600104101	60-85
7600104301	60-80
7600104401	60-85
7600145001	60-85
7600160001	60-85
7600170307	60-75
7600170402	60-90
7600170503	60-80
7600400401	60-90
	60-95
7600400501	60-90
	60-95
7600401201	60-90
	60-95
7600401401	60-90
	60-95
7600401701	60-90
	60-95
7600402101	60-80
7600402201	60-80
7600440004	60-90
7600450101	60-90
	60-95
7600470201	60-90
	60-95
7600470401	60-90
	60-95
7600470501	60-95
7600600601	60-100
	60-105
7600600701	60-100
	60-105
7600600801	60-100
	60-105
7600600901	60-100
	60-105
7600601001	60-100
	60-105
7600601101	60-100
	60-105
7600601302	60-100
	60-105
7600601401	60-100
	60-105
7600601501	60-100
	60-105
7600601602	60-100
	60-105
7600601701	60-100
	60-105
7600601801	60-100
	60-105
7600640009	60-105
7600640010	60-105
7600645003	60-100
	60-105
7600645004	60-100
	60-105
7600645005	60-100
	60-105
7602600401	60-110
7602600501	60-110
7602600601	60-110
7602600701	60-110
7602600801	60-110
7602600901	60-110
7602601002	60-80
7602601101	60-110
7602601201	60-110
7602601301	60-110
7602601401	60-110
7602601501	60-110
7602601601	60-110
7602601701	60-110
7602601801	60-110
7602660004	60-110
7602660203	60-110
7602660301	60-110
7602660401	60-110
763786M1	130-60
816500060012	40-90
816500060022	40-90
816500060041	40-85
816500060051	40-85
816500060090	40-85
	40-90
816860030040	30-70
816860030050	30-70
816860030070	30-70
816860030110	30-70
816860070011	40-40
816860070030	40-40
816860070040	40-40
816860100020	30-75
816860100032	30-75
816860100080	30-75
816860100120	30-75
816870030060	30-70
816920011031	20-10
816940010010	70-170
816960700020	50-30
822100010040	30-40
822100010060	30-40
822100010120	30-40
	60-45
822100010130	30-40
	60-45
822100010140	30-40
822100010160	30-40
822100010190	30-40
822100010200	30-40
822100010210	30-40
822100030040	30-25
822100050130	30-30
822100050140	30-30
822100070411	70-225
	70-230
	70-235
822100070451	70-110
822100150080	30-55
822100150120	30-55
822100220040	50-5
822100220080	50-5
	50-10
822100220100	50-20
822100220110	50-20
822100220120	50-5
	50-10
822100220150	50-15
822100220170	50-5
	50-10
822100220200	50-15
822100220210	50-15
822100220220	50-15
822100220240	50-20
822100220250	50-20
822100220260	50-20
822100220300	50-15
822100220310	50-15
822100220330	50-15
822100220340	50-5
	50-10
822100220380	50-5
	50-10
822100220390	50-20
822100220470	50-20
822100220510	50-5
	50-10
822100220520	50-5
822100220521	50-10
822100220530	50-5
	50-10
822100220610	50-20
822100220620	50-20
822100220840	50-5
822100220850	50-5
	50-10
822100220860	50-5
822100320060	60-40
	60-65
	60-70
822100600021	70-110
822100600060	70-110
822100600070	70-110
822100620310	70-115
822100620320	70-115
822100620400	50-25
822100620450	50-25
822100620460	50-25
824100220010	50-5
	50-10
824100220020	50-15
831497M1	10-180
832297M1	10-230
833059M1	20-15
835025M1	70-180
903100050021	25-5
903100050031	20-10
903100050110	25-5
903100320010	60-40
	60-65
	60-70
903100490010	70-65
903100490050	70-65
903100490060	70-65
903100490080	70-65
903100490100	70-70

903100490170	70-65
903101380011	60-50
903101380021	60-50
903150070010	70-50
903860030010	30-70
903860030020	30-70
903860070010	40-40
908543M1	120-45
916100030010	30-5
	30-15
916100050060	20-15
916100050070	20-15
916100070010	30-65
916100080181	25-20
916100090250	25-85
916100220010	50-5
	50-10
916100320010	60-45
916100320040	60-45
916100320061	30-65
916100320070	60-45
916100320080	60-45
916100320110	60-45
916100320131	60-45
916100320140	60-45
916100320161	60-45
916100320170	60-45
916100320190	30-65
916100380100	60-50
916100410030	30-50
916100410040	30-50
916100410060	30-50
	60-45
916100421052	20-15
916100421100	20-15
916100430020	25-45
916100430311	25-35
916100470121	70-80
	70-85
916100470210	70-85
916100470240	70-85
916100490040	70-65
916100490131	70-75
916100490180	70-70
916100530041	25-70
916100530060	25-70
916100530170	25-50
916100600030	70-100
916100600040	70-100
916100600050	70-100
916100600061	70-100
916100600070	70-100
916100600100	70-100
916100600201	70-105
916100600210	70-100
916100600220	70-100
916100630011	25-15
916100630020	25-15
916100630030	25-15
916101050060	25-5
916101050100	20-10
916101080070	25-20
916101090221	25-85
916101170010	10-135
	25-75
916101170020	25-75
916101320100	60-40
	60-45
	60-65
	60-70
916101320120	60-45
916101320151	60-45
916101410010	30-50
916101430101	25-35
916101530010	25-50
916101530050	25-70
916501110040	50-30
916501110050	50-30
916501120030	40-90
916501120050	40-70
	40-75
916501120060	40-70
916970160401	25-50
920500120520	40-70
920501110010	50-35
920501120100	40-70
920700180070	130-55
920700180080	130-55
922870040010	40-80
922870040020	40-80
922870040030	40-80
922870040040	40-80
922870040050	40-60
926101150060	30-55
926101150070	30-55
926101150240	30-55
926101150260	30-55
926102080130	25-20
	50-5
	50-10
926102410020	30-50
926102410030	30-50
926102410040	30-50
926103080010	25-75
926103080020	25-75
926110050010	25-5
926150010010	30-60
926150010020	30-60
926150010030	30-40
926150010040	30-40
926150010050	30-40
926150010060	30-40
926150010070	30-40
926150010080	30-40
926150050014	30-30
926150050020	30-30
926150150021	30-55
926150150032	30-55
926150150040	30-55
926150150061	30-55
926150150070	30-60
926150150080	30-60
926150220010	50-15
926150220030	50-15
926150220040	50-15
926150220060	50-15
926150220070	50-15
926150220080	50-10
	50-15
926150220160	50-5
926150220200	50-15
926150220210	50-10
926150220220	50-10
926150220230	50-10
926160150200	30-55
926160150220	30-55
926870030010	40-20
926870030020	40-20
926870030030	40-20
926871040060	40-80
926871040070	40-60
926871040080	40-60
931500110030	50-30
961866M1	120-10
CH175-1323	120-5
	120-10
CH9X-8118	120-50
E931100420010	20-15
F117961030010	70-200
	70-205
	70-210
F150403090340	25-85
F158500030010	110-225
	110-230
	110-235
F178500030460	110-225
	110-235
F184531030210	110-225
	110-235
F198500030250	110-220
	110-230
F198500030270	110-220
	110-230
F205500035210	110-235
F248500033030	110-220
F248500033060	110-220
F248500033130	110-220
F279940050030	70-75
F279940050040	70-75
F281870062052	40-45
F284501061110	40-95
F312500030090	110-225
F312500030100	110-225
F312500030110	110-225
	110-235
F312500030130	110-225
F312500030160	110-225
	110-235
F312500030170	110-225
	110-235
F312500030300	110-225
	110-235
F312500031020	110-235
F312500031050	110-225
	110-235
F312500031110	110-235
F312500031130	110-235
F312500031190	110-235
F312500031280	110-230
F411151600010	70-110
F411501030010	110-220
	110-230
F411860030050	40-10
F524101070140	70-60
F524101070170	30-65
F524500033080	110-225
	110-235
F524500033100	110-225
	110-235
F716100090010	25-80
F716100090020	25-80
F716100430010	25-45
F716100600040	70-105
F716100600080	70-105
F716100600090	70-105
F716100600100	70-105
F716150070050	70-60
F716501030050	110-220
	110-230
F716501030060	110-220
	110-230
F716501030070	110-220
	110-230
F716501030080	110-220
	110-230
F716501030090	110-220
	110-230
F716501030100	110-220
	110-230
F716501030110	110-220
	110-230
F716501030120	110-220
	110-230
F716501030130	110-230
F716501030140	110-230
F716501030150	110-230
F716501030170	110-230
F716501030180	110-230
F716501030200	110-230
F716501030280	110-220
	110-230
F716501030290	110-220
	110-230
F716501030300	110-220
	110-230
F716501030310	110-230
F716501030320	110-230
F716501030330	110-230
F716501030340	110-230
F716501030350	110-230
F716501030360	110-230
F716501030380	110-230
F716501030400	110-220
F716501030410	110-220
F716501030450	110-220
F716501030460	110-220
F716501030470	110-220
F716501030480	110-220
F716501030510	110-220
	110-230
F716501030610	110-235
F716501030620	110-225
	110-235
F716501030680	110-235
F716501030690	110-235
F716501030700	110-235
F716501030710	110-235
F716501030740	110-230
F716501030770	110-225
	110-235
F716961030040	70-200
	70-205
	70-210
F718301020290	60-80
	60-100
	60-105
F718301020300	60-80
	60-100
	60-105
F718301020520	60-100
	60-105
F718500030030	110-230
F718500030100	110-220
	110-230
F718701030070	130-25
F718970160120	25-60
F816500070020	40-95
F816500070030	40-95
F816500070040	40-95
F816500070060	40-95
F816500070070	40-95
F816500070100	40-95

F816500070120 40-95
F816500070130 40-95
F816500070140 40-95
F816500070150 40-95
F816500070160 40-95
F816500070170 40-95
F816500070180 40-95
F816500070190 40-95
F822100070030 70-60
F822100070040 70-60
F822100070060 70-60
F822100150010 30-60
F822100150020 30-60
30-65
F822100150030 30-60
30-65
F822100150040 30-60
F822100480010 30-35
F903150600010 70-110
F903150600020 70-110
F903150600030 70-110
F916100070010 30-65
F916100430010 25-45
F916100490010 70-70
F916100490020 70-75
F916100600010 70-100
F916100600030 70-100
F916100600040 70-100
F916101600010 70-105
F916200060010 10-150
F916200060020 10-150
F916200060030 10-150
F916200060040 10-150
F916200060050 10-150
F916200060061 10-150
F916200060070 10-150
F916200060081 10-150
F916200060090 10-150
F916200060100 10-150
F916500030010 110-225
110-235
F916500031180 110-225
110-235
F916501030040 110-230
F916501030050 110-230
F916501030070 110-230
F916501030080 110-230

F916501030100 110-230
F916501030110 110-230
F916501030140 110-225
110-235
F916501030150 110-235
F916501030230 110-220
110-230
F916961020160 70-220
F916961020190 60-35
70-220
F916961022160 70-215
F916970160011 25-55
25-60
F924860030010 40-5
40-10
F924860030020 40-5
40-10
F924860030030 40-5
F924860030050 40-5
40-10
F930500030130 110-225
110-235
F930500030180 110-235
F930500030220 110-235
G001990011310 40-5
40-10
G001990100010 70-220
G001990200140 25-50
G001990200330 30-65
G001990200630 30-50
G001990200640 30-50
G205900900020 110-185
G312100600110 70-105
G411151600020 70-110
G514100100060 70-50
G515500030100 110-220
110-230
G701100090800 110-35
G701970070018 90-65
G701970160012 25-55
G701970160050 25-60
G701970160060 25-65
G716100090971 25-80
G716100430011 25-45
G716100600122 70-105
G716150200060 70-110
G716501120062 40-70

G716861100020 30-75
G716970160030 25-85
90-65
90-80
G718100600113 70-105
G718970020021 90-95
G816300020180 60-90
60-95
G816500072040 40-95
G816970020040 20-10
90-95
G822100070380 70-60
G822100070390 70-60
G822100150020 30-40
G822100220030 50-5
50-10
G903150070100 70-60
G903150070110 70-60
G903150600101 70-110
G916100070030 30-65
G916100320010 60-45
G916100320030 30-65
G916100490012 70-70
G916100490021 70-70
G916100490030 70-75
G916100530013 25-50
G916100600020 70-100
G916100600044 70-100
G916100600142 70-105
G916100600180 70-105
G916101090220 25-90
G916101430020 25-45
G916101430030 25-45
G916101430050 25-35
G916101600012 70-105
G916101600020 70-105
G916200060100 10-150
G916501120050 40-70
G916951010010 70-170
G916951010020 70-170
G916970020014 90-95
G916970020021 20-10
G916971020033 25-75
G924860030011 40-5
G926101150040 30-55
G926150010010 30-40
G926150150050 30-55

G926150220040 50-5
G926150220050 50-10
G926160150200 30-55
G930860030010 30-70
G930860030020 40-10
H312100200100 60-45
H312100222020 50-15
H312100360030 90-95
H312900150010 30-5
30-15
70-40
H411100620100 70-90
H716921050030 40-70
H718100490011 70-75
H718100531010 25-70
H816500120020 40-70
40-75
H816860030042 30-70
H816860100022 30-75
H822100030020 30-25
H822100030030 30-25
H822100150020 30-55
H822100150040 30-55
H822100220010 50-15
H822100220070 50-5
50-10
H822100220080 50-20
H822100620300 50-25
H822100620310 50-25
H903100090310 25-85
H903100470010 70-80
H916100320010 60-45
H916100430012 25-35
H916100470100 70-80
H916100470110 70-80
H916100470121 70-80
H916100470131 70-80
H916100470200 70-85
H916100470220 70-85
H916100470230 70-85
H916100480020 30-35
H916100490010 70-70
H916100490030 70-75
H916100600010 70-105
H916100620011 70-80
H916100620061 70-95
H916100620071 70-90

H916100620101 70-90
H916100620121 70-80
70-95
H916100620130 70-95
H916100620142 70-95
H916100620260 70-115
H916100620270 70-115
H916100620280 70-115
H916100630010 25-15
H916101170010 25-75
H916101620011 70-90
H916101620020 70-95
H916501120102 40-90
H920500120100 40-80
40-90
H920501120110 40-80
H920501121130 40-80
H920501121140 40-80
H926103530020 25-50
H926150030020 30-25
H926150030060 30-25
H926150150200 30-55
H926150480010 30-35
H926150620200 70-115
H926150620210 70-115
H926150620220 70-115
H926150620230 70-115
H926150620240 70-115
H926870050021 40-25
40-30
H931500110010 50-30
H931500110030 50-30
V500050642 10-100
V500050840 10-25
V500051302 20-5
V500150642 10-25
V500150840 10-55
V500150842 10-50
10-100
V500151050 10-75
V500950800 10-50
10-70
V500951200 10-30
10-50
20-5

V504600602 10-85
10-90
10-100
V504601000 10-45
V504601200 20-5
V504601400 10-30
V504601600 10-65
V504602002 10-95
V504611802 10-70
V504800800 10-60
10-65
10-80
10-85
10-90
V504861000 10-55
V510600502 10-70
V510600602 10-70
10-80
V512861000 10-40
V513601002 10-80
V521601000 10-85
10-90
V528702230 20-5
V528800782 10-70
V528801062 10-30
V528801082 10-70
10-80
V528801360 10-55
10-95
10-100
V528801362 10-25
10-65
V528801380 10-25
10-30
10-55
10-60
10-65
10-70
10-85
10-90
V528801400 10-30
10-80
10-100
V528801410 10-30
10-80
10-85
V528801420 10-80

NUMERICAL INDEX
INDEX NUMERIQUE
NUMMERN-INDEX
INDICE NUMERICO
INDICE NUMERICO

G 20

V528801750	20-15	V581704840	10-55	V614605930	10-90	V640325014	10-25	V836120989	10-30	V836662130	10-60
V528801800	10-45	V581705030	10-75	V614606225	10-85		10-65		10-95	V836664013	10-80
	10-95		20-5	V614607930	10-65		10-75	V836122910	10-55	V836664226	10-125
V528801810	10-95	V581705200	10-55	V614703042	10-65	V640325018	10-30		10-75	V836664377	10-25
V528801830	10-45	V581705850	20-15	V614901030	10-50		10-45	V836214478	10-25	V836666910	10-25
V528901400	10-30	V581705910	10-30	V615870812	10-70		10-60	V836316726	10-85	V836666980	10-100
V528901550	10-80	V581706370	20-5	V615870814	10-30		10-65	V836322183	10-55	V836667650	10-60
V528902200	10-30	V581804182	10-25	V615871014	10-25	V640325110	10-25	V836322190	10-60	V836667732	10-100
V528902230	10-35	V581804582	10-45		10-65		10-65		10-65	V836667934	10-95
V529701880	10-55		10-50		10-75	V640425005	10-70	V836322221	10-35	V836667960	10-80
	10-95	V581804600	10-25	V615881216	10-60	V640425008	10-70	V836322852	10-25	V836673013	10-80
V529701950	10-55		10-55		10-65	V640435005	10-70	V836322906	10-55	V836747849	10-45
V529801102	10-25	V581804602	10-50		10-70	V640435006	10-75	V836322909	10-55		10-80
V529801112	10-85	V581804620	10-30		10-75	V640435008	10-75	V836328071	10-55	V836840882	10-35
	10-90		10-60	V615881418	10-65	V640435010	10-75	V836331590	10-65	V836840883	10-30
V529801430	10-65	V581804630	10-25	V615881420	10-25	V640435018	10-65	V836336302	10-35	V836840884	20-5
V529801440	10-30		10-50		10-45	V641086010	10-75		10-105	V836840885	10-90
	10-80	V581804690	10-60		10-75	V641086012	10-85	V836336934	10-75	V836840887	10-35
V529801460	10-60	V581804730	10-60		10-90		10-90	V836338180	10-55	V836840930	10-90
V529801470	10-30	V581805050	10-55	V615881620	10-25	V641436008	10-70	V836338182	10-55	V836840934	10-115
	10-65	V590253388	10-25		10-60	V644611006	10-95	V836338186	10-55	V836840944	10-35
	10-80	V598355365	10-80		10-65	V651754720	10-100	V836338188	10-55		10-105
	10-95	V598359850	10-30		10-85	V651755320	10-100	V836338201	10-55	V836840945	10-35
V529801480	10-80		20-5	V615881622	10-90	V835261283	10-5	V836338601	10-25		10-105
V529801490	10-95	V598359860	10-30	V615881822	10-30	V835261284	10-5	V836338606	10-35	V836840978	10-35
V529801520	10-65	V602060610	10-100		10-45	V835261746	10-5	V836338650	10-35	V836840979	10-35
V529801530	10-80	V602070605	10-70		10-60	V835261747	10-5	V836338651	10-35	V836840980	10-35
V529801550	10-65	V602074608	10-70		10-65	V835324324	10-85	V836338652	10-35	V836840981	10-35
V529801562	10-95	V602078532	10-50	V615881824	10-25		10-90	V836338653	10-35	V836840982	10-35
V529801920	10-40	V603305760	10-40	V615881827	10-55	V835329746	10-50	V836338667	10-55	V836840983	10-35
V529903090	10-55	V610032060	10-95	V615882227	10-65	V835336842	10-65	V836338985	10-85	V836840992	10-90
V529903180	10-25	V610060085	10-95	V617330047	10-65	V836007871	10-55	V836340948	10-35	V836840998	10-115
V529904330	10-55	V610063064	10-95	V617330052	10-30	V836008449	10-55	V836359603	10-125	V836852459	10-25
V540801780	10-50	V610072040	10-65		10-95	V836014264	10-40	V836362228	10-125	V836852460	10-25
V540801910	10-50	V610072109	10-30	V617330068	10-95	V836015156	10-65	V836362229	10-125	V836852461	10-25
V546701800	10-90	V610073040	10-30	V617330072	10-95	V836015967	10-80	V836529872	10-95	V836852744	10-25
V546701850	10-85	V614600724	10-60	V617350062	10-95	V836017927	10-30	V836640752	10-45	V836855297	10-55
V546801360	10-25	V614601125	10-75	V640016016	10-25	V836020054	20-5		20-5	V836855300	10-55
V546801400	10-25	V614601324	10-30	V640016018	10-25	V836119079	10-25	V836646393	10-65	V836855348	10-45
V546801490	10-60	V614601524	10-25	V640016040	10-25		10-60	V836647942	10-45	V836855350	10-45
	10-80		10-30	V640016045	10-45		10-65	V836655406	10-40	V836855446	10-25
V546801580	10-65	V614601924	10-30	V640045022	10-65	V836119384	10-80		10-45	V836855447	10-25
V546801815	20-5	V614602030	10-60	V640255210	10-75	V836119643	10-45	V836655493	10-55	V836855484	10-60
V546801900	10-45	V614602430	10-60	V640305012	10-60	V836119837	10-65	V836659026	20-15	V836855506	10-80
V546802350	20-5		10-65		10-65	V836120022	10-25	V836659521	10-60	V836855517	10-60
V581704650	10-70	V614603540	10-30				10-125	V836659524	10-60	V836855519	10-60
V581704660	10-70	V614604958	10-65					V836659785	10-45	V836855520	10-60

V836855521	10-60	V836859452	10-65	V836867841	10-55	V837069032	10-70	V837070147	10-25	X412823106000	50-5
V836855525	10-35	V836859493	10-85	V836867873	10-65	V837069047	10-80	V837070148	10-40		50-10
V836855554	10-25	V836859683	10-95	V836867995	20-15	V837069050	10-70	V837070168	10-30	X413420206000	50-15
V836855558	10-35	V836859684	10-95	V836867997	20-15	V837069052	10-25	V837070184	10-65	X419432887000	25-5
V836855562	10-30	V836859989	10-95	V837062565	10-105	V837069056	10-25	V837070185	10-35		40-85
V836855565	10-30	V836862582	10-105	V837062617	10-65	V837069057	10-25		10-105		40-90
V836855601	10-65	V836864101	10-35	V837062627	10-110	V837069060	10-35	V837070187	10-45	X428202239000	25-80
V836855603	10-65	V836864102	10-35	V837062628	10-105	V837069069	10-30	V837070188	10-45	X428202739000	30-25
V836855625	10-65	V836864103	10-35		10-110	V837069070	10-30	V837070189	10-100	X428202805000	50-15
V836855629	10-25	V836864104	10-35	V837062629	10-70	V837069077	10-65	V837070197	10-25	X428202839000	30-25
V836855630	10-85	V836864105	10-35	V837062650	10-105	V837069078	10-65	V837070198	10-100		50-20
V836855636	10-30	V836864106	10-35	V837064906	10-45	V837069085	10-40	V837070201	10-100		70-60
V836855637	10-35	V836864107	10-35	V837064907	10-45	V837069088	10-35	V837070209	10-100	X428203203000	50-20
V836855639	10-65	V836864141	10-35	V837064908	10-45	V837069146	10-70	V837070219	10-80	X428203205000	30-55
V836855641	10-35	V836864288	10-35	V837064910	10-40	V837069147	10-70	V837070223	10-75	X428203239000	30-25
V836855666	10-95	V836864296	10-95	V837067295	10-80	V837069150	10-100	V837070228	10-80	X428203241000	25-5
V836855673	10-55	V836866036	10-25	V837067345	10-80	V837069216	10-100	V837070249	10-70	X428204005000	25-5
V836855678	10-25	V836866069	10-25	V837067696	10-25	V837069268	10-70	V837070252	10-75	X428803240000	50-20
V836855689	10-95	V836866221	10-85	V837067825	10-80	V837069313	10-70	V837070253	10-75	X428804040000	50-20
V836855690	10-35	V836866381	10-85	V837067881	10-50	V837069314	10-70	V837070255	10-70	X434103240000	30-25
V836855714	10-90	V836866454	10-85	V837067961	10-90	V837069410	10-100	V837070258	10-70	X434105040000	25-15
V836855756	10-95	V836866576	10-75	V837067962	10-90	V837070000	10-30	V837070277	10-70	X450003308000	25-75
V836855777	10-65	V836866735	10-65	V837067969	10-125	V837070001	10-30	V837070285	10-25	X450003908000	10-150
V836855789	10-95	V836866808	10-85	V837069001	10-45	V837070018	10-65	V837070286	10-25		30-75
V836855934	10-95	V836866809	10-85	V837069002	10-40	V837070020	10-65	V837070290	10-45	X450005108000	25-75
V836855941	10-95		10-90	V837069003	10-40	V837070021	10-25	V837070292	10-100	X450006308000	60-45
V836855995	10-80	V836866842	20-5	V837069004	10-40	V837070036	10-40	V837070314	10-70		70-80
V836859034	10-80	V836866957	10-25	V837069005	10-40	V837070048	10-100	V837070328	10-80		70-85
V836859105	10-60	V836866958	10-25	V837069006	10-40	V837070049	10-100	V837070343	10-50		70-90
V836859109	10-45		10-125	V837069007	10-70	V837070050	10-100	V837070346	10-50		90-95
V836859110	10-45	V836867046	10-25	V837069009	10-80	V837070055	10-100	V837070392	10-80	X450008708000	50-25
	10-50	V836867048	10-25	V837069011	10-40	V837070064	10-30	V837070393	10-25	X450907508000	70-95
V836859117	10-85		10-105	V837069013	10-40	V837070072	10-30	V837070400	10-105	X453608408000	30-25
V836859119	10-95	V836867050	10-25	V837069014	10-40	V837070073	10-70	V837070401	10-105	X454407508000	30-70
V836859120	10-95	V836867231	10-75	V837069015	10-40	V837070074	10-65	V865261283X	10-5	X477027705000	25-75
V836859121	10-95	V836867233	10-75	V837069016	10-40	V837070076	10-65	V865261284X	10-5	X482953200000	30-30
V836859122	10-95	V836867234	10-60	V837069017	10-40	V837070077	10-70	V865261746X	10-5	X483500200000	25-5
V836859134	10-60	V836867533	10-90	V837069018	10-40	V837070078	10-70	V865261747X	10-5	X483500600000	70-85
V836859153	10-25	V836867567	10-45	V837069019	10-40	V837070079	10-70	V886325175	10-90	X483500800000	30-30
V836859182	10-60	V836867568	20-15	V837069020	10-40	V837070080	10-70	VHC9326	10-65	X483501600000	30-70
V836859187	10-60	V836867688	10-55	V837069021	10-50	V837070081	10-70	X304285000000	25-75	X483800000000	30-30
V836859347	10-95	V836867727	10-55	V837069022	10-50	V837070082	10-70	X407201401000	25-80		70-110
V836859348	10-95	V836867752	10-45	V837069023	10-40	V837070086	10-30	X407202001000	30-25	X483800401000	30-30
V836859356	10-95	V836867753	10-45	V837069025	10-45	V837070112	10-30	X410115601000	25-80	X483800800000	70-100
V836859357	10-95	V836867773	10-95	V837069026	10-50	V837070113	10-30	X410124605000	30-25	X483801200000	25-5
V836859363	10-95	V836867830	10-75	V837069027	10-70	V837070121	10-70	X410125801000	30-25		70-105
V836859364	10-95	V836867832	10-75	V837069029	10-50	V837070130	10-100	X412823006000	60-45		

NUMERICAL INDEX
INDEX NUMERIQUE
NUMMERN-INDEX
INDICE NUMERICO
INDICE NUMERICO

G 22

X483801600000	40-5	X487522341000	70-110	X493619205000	30-55	X530004146000	70-70	X534677146000	50-5	X547583600000	40-5
	40-10	X487526841000	30-30	X494515201000	70-80	X530004246000	30-25		50-10		40-10
	70-100		60-45	X494515300000	70-80	X530005446000	50-5	X534678300000	50-15	X547587200000	40-5
X483803200000	20-10		70-70		70-85		50-10	X534678400000	50-15		40-10
X483803201000	20-10		70-80	X499501100000	30-70	X530006146000	50-15	X534678500000	50-15	X548301500000	70-110
X483804801000	25-5	X487527305000	70-115	X499502495000	25-5		70-65	X534678600000	50-15	X548317400000	40-5
X483807201000	25-5	X487527441000	30-75	X500604900000	25-75	X530007246000	30-70	X534678700000	50-15		40-10
X483900000000	70-100	X487527741000	30-35	X500613146000	25-75	X530007946000	50-15	X534683000000	30-40	X548766700000	50-20
	70-105		30-55	X500615046000	60-45	X530008300000	40-5	X534683100000	30-40	X548767000000	50-20
X483900400000	25-45		70-85	X500622300000	30-40		40-10	X534683300000	30-40	X548809016000	70-105
X483900800000	25-45		70-90	X500624946000	25-75	X530009100000	50-15	X534683700000	30-40	X548813100000	70-105
X484404001000	30-55		90-95	X500628246000	30-55	X530014200000	70-80	X534767700000	50-5	X548818015000	70-80
X485002501000	30-75	X487527941000	70-70		30-75		70-95		50-10		70-85
X485004405000	70-75	X487528105000	70-100	X500629146000	30-40	X530014446000	25-75	X534767900000	50-5	X548823200000	25-50
X485004700000	60-50	X487528141000	30-75	X505529200000	25-85	X530017746000	30-50		50-10	X548829200000	70-100
X485005305000	70-75	X487531301000	30-70	X505544539000	30-65	X530017846000	30-50	X534781500000	30-55		70-105
X485005405000	70-75	X487531505000	50-20	X505558539000	30-60	X530105346000	25-50	X534781600000	30-55	X548830066000	70-115
X485007301000	25-55	X487531541000	25-85		30-65	X530105946000	25-75	X534781700000	30-55	X548833602000	70-85
	25-60		30-70	X505559459000	40-80	X530106046000	70-65	X540003078000	30-30		70-100
	25-65	X487531741000	25-85		40-85	X530106546000	30-55		70-110	X548848016000	70-75
X485007605000	30-40	X487531841000	25-90		40-90	X530107246000	70-65	X540003678000	30-30	X548848066000	25-75
X485008606000	30-65	X487531941000	30-65	X505578900000	20-10	X530107446000	60-45		70-80	X548857366000	70-100
X485009405000	30-75		50-20		25-5	X530107946000	25-35	X540003878000	70-105	X548859400000	70-110
	90-95	X487532541000	50-5		30-30	X530108346000	60-45	X540004078000	90-95	X548860601000	70-75
X485013105000	70-95		50-10	X505585617000	30-70	X530109946000	30-40	X540004278000	70-100	X548868866000	70-100
X485013205000	70-65		50-20		40-80	X530209700000	60-45		70-105	X548868966000	70-75
	70-75	X487534001000	70-75		40-85	X530215446000	70-70	X540004878000	25-5	X548870566000	70-100
X485013305000	70-70	X487535706000	60-85		40-90	X530216846000	60-45		70-105	X548871400000	70-100
X485013605000	30-30	X487535806000	30-60	X506239300000	25-35	X530325046000	50-15	X540005478000	40-5	X548871466000	70-100
X485018905000	50-15	X487536041000	25-5		25-50	X531001146000	70-90		40-10	X548878200000	70-70
X485019801000	25-35	X487537500000	30-25		30-40	X531206800000	60-45		70-100	X548881466000	70-100
X486517800000	10-150	X487545241000	30-25	X520802601000	30-75	X532503846000	70-65	X540007478000	30-55	X548885102000	25-35
X486528705000	70-100		50-15	X520803901000	30-75	X533212000000	70-65	X540007678000	60-75		25-40
	70-105	X487545441000	30-25		70-110		70-170		60-80	X548887266000	70-180
X486529005000	70-110	X487545606000	25-5	X520804401000	30-70	X533813400000	60-45		60-100	X548892900000	20-15
X486536200000	30-40	X487551400000	30-30	X521403047000	25-80	X534310246000	25-85		60-105	X548895001000	30-35
X486537601000	30-55	X489132006000	50-15	X521403947000	90-95	X534535346000	70-85	X540008278000	20-10	X548901801000	20-15
	30-60	X489132106000	50-15	X521404447000	25-85	X534537246000	25-85		25-75		60-45
X486546301000	25-5	X489138400000	30-55		25-90		25-90	X540009478000	20-10	X548907866000	70-170
X486546506000	25-5	X489145701000	25-5		50-5	X534538146000	25-50		30-55	X548909366000	50-5
X486551000000	30-70	X489146201000	25-5		50-10	X534538900000	30-50	X540010278000	25-5		50-10
X486551706000	30-30	X489148906000	25-5	X521405047000	30-25	X534539346000	60-40	X540012278000	25-5	X548922800000	70-170
X486551800000	30-70	X490522300000	25-75	X521406647000	30-25		60-65	X540410601000	40-5	X548926801000	50-20
X487513841000	25-75	X490617400000	25-85	X523703900000	30-75		60-70		40-10	X548949815000	60-45
X487517441000	10-150	X493607305000	50-5	X530001146000	70-85	X534566246000	50-15	X542541001000	70-95	X548953366000	20-15
X487520041000	50-15		50-10	X530002746000	25-85	X534677046000	50-5	X547502700000	25-70	X548960666000	70-100
X487520441000	25-80	X493613105000	70-115		25-90		50-10			X548963400000	20-15

X548972066000	40-5
	40-10
X548987066000	70-70
X548989200000	70-170
X548989201000	70-70
X548994700000	50-15
X548995902000	70-75
X548999066000	30-55
X549030900000	30-55
X549041100000	30-60
X549044100000	30-60
X550035200000	25-50
X550108900000	60-45
	70-65
X550150200000	30-60
X550150400000	30-70
X550162800000	50-15
X560240001000	40-5
	40-10
X560242800000	40-5
	40-10
X560505900000	50-5
	50-10
X560703600000	60-45
X560703700000	60-45
X560718800000	30-40
X562504000000	40-10
X562555063000	50-30
X566300600000	70-105
X584316900000	70-115
X591202101000	30-25
X591652500000	70-85
X592501000000	70-80
	70-85
X592501100000	70-90
	70-115
X592501200000	70-115
X592501300000	70-75
	70-80
	70-95
X592501303000	70-80
X592501600000	70-100
X592502500000	70-90
X593816300000	70-75
X596135200000	70-105
X600585202000	25-45
X600585202010	25-45
X605009000000	25-85
	25-90
X605018000000	40-5
	40-10
X605028000000	40-5
X605505811000	70-65
X605505900000	70-65
X605506311000	50-5
	50-10
X605506600000	50-15
X605511411003	70-65
X606705900000	60-45
X606722501000	25-50
X607305302000	25-50
X607395200000	25-85
X609535400000	40-10
X609715700000	30-30
X619049041009	50-15
X619049341009	50-15
X619057201003	30-50
X619072600007	30-50
X620414500001	60-45
X620430501000	25-35
X622048500000	30-40
X622348000000	25-35
X624206000000	25-75
X638525149000	60-45
X662516200000	30-25
	40-10
X668468201000	10-125
X668980522000	25-55
	25-60
	25-65
	25-80
X699239900000	25-50
X830120050000	30-5
	30-15
	70-40
X903005286000	25-55
	25-60
X903005286995	25-65
X903050074000	25-5
	30-30
	30-60
Z099047000000	25-10

10

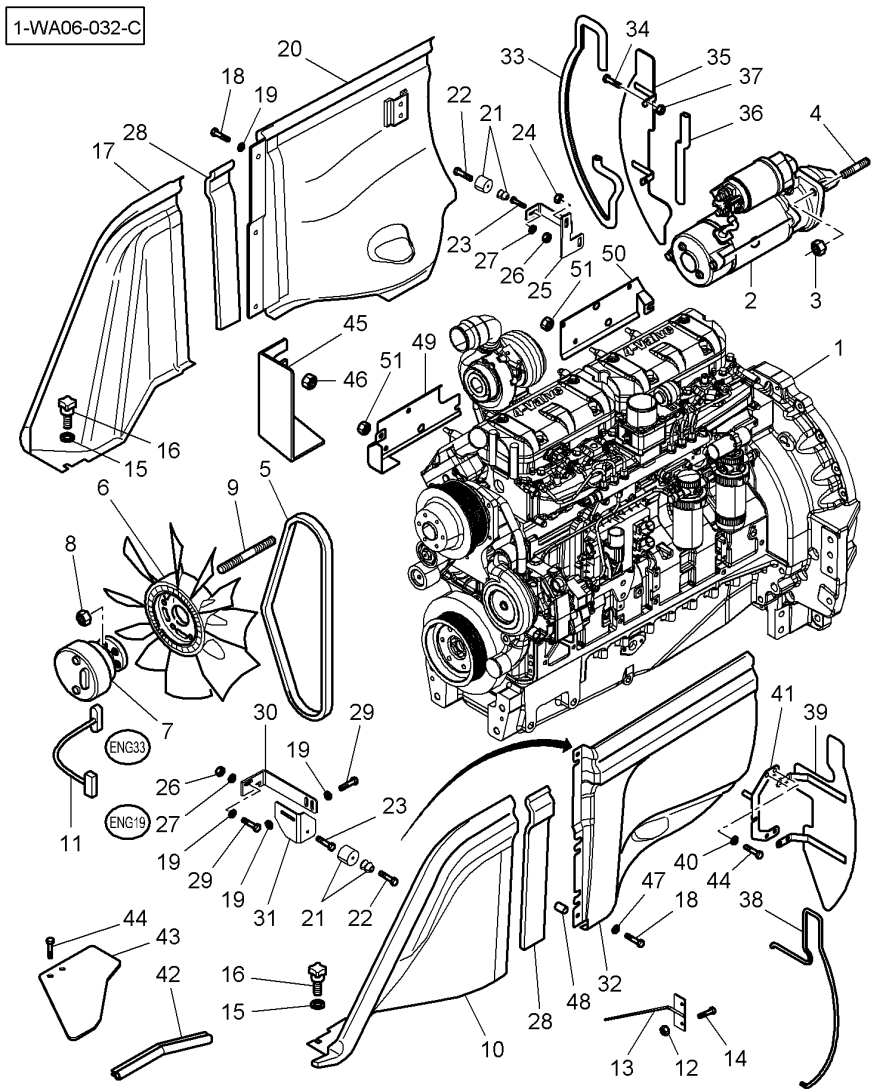

1	V835261283	[A] ➡| 17-DEC-2006 MT 655B 84 CTA	**1**	ENGINE	MOTEUR MOTORE	MOTOR MOTOR
1	V865261283X	[C] ➡| 17-DEC-2006 MT 655B	**1**	SHORT ENGINE	BLOC EMBIELLE MOTORE ALLEGGER.	RUMPFMOTOR BLOQUE EMBIELADO
1*	V835261746	[A] ➡ 18-DEC-2006 MT655B 84 CTA	**1**	ENGINE	MOTEUR MOTORE	MOTOR MOTOR
1*	V865261746X	[C] ➡ 18-DEC-2006 MT 655B	**1**	SHORT ENGINE	BLOC EMBIELLE MOTORE ALLEGGER.	RUMPFMOTOR BLOQUE EMBIELADO
1	V835261284	[A] ➡| 11-DEC-2006 MT 665B 84 CTA	**1**	ENGINE	MOTEUR MOTORE	MOTOR MOTOR
1	V865261284X	[C] ➡| 11-DEC-2006 MT 665B	**1**	SHORT ENGINE	BLOC EMBIELLE MOTORE ALLEGGER.	RUMPFMOTOR BLOQUE EMBIELADO
1*	V835261747	[A] ➡ 12-DEC-2006 MT 665B 84 CTA	**1**	ENGINE	MOTEUR MOTORE	MOTOR MOTOR
1*	V865261747X	[C] ➡ 12-DEC-2006 MT 665B	**1**	SHORT ENGINE	BLOC EMBIELLE MOTORE ALLEGGER.	RUMPFMOTOR BLOQUE EMBIELADO
2	3823621M91	[B] 👁 10-20 No	**1**	STARTERMOTOR	DEMARREUR MOTORINO AVVIAM.	ANLASSER MOTOR ARRANQUE
3	339402X1		**3**	NUT SPECIAL	ECROU SPECIAL DADO SPECIALE	SPEZIALMUTTER TUERCA ESPECIAL
4	391006X1	M10X30	**3**	STUD	GOUJON SPINOTTO FILETT.	STEHBOLZEN ESPARRAGO ROSCA.
5	**4285103M1**	◀▶ 1930MM ➡| R186002	**1**	BELT	COURROIE CINGHIA	RIEMEN CORREA
5*	**4288688M1**	◀▶ 1915MM ➡ R186003	**1**	BELT	COURROIE CINGHIA	RIEMEN CORREA
6	4274233M1		**1**	FAN	VENTILATEUR VENTILATORE	LÜFTER VENTILADOR
7	3789258M1		**1**	CLUTCH	EMBRAYAGE FRIZIONE	SCHALTKUPPLUNG EMBRAGUE
8	1441932X1		**6**	NUT METRIC	ECROU METRIQUE DADO METRICO	MUTTER METRISCH TUERCA METRICO
9	3011339X1	M10X22	**6**	STUD	GOUJON SPINOTTO FILETT.	STEHBOLZEN ESPARRAGO ROSCA.
10	5017889M1	◀	**1**	COWL	GARANT CAPPOTTATURA	AUFSATZ CAPERUZA
11*	4272811M4		**1**	HARNESS	FAISCEAU FASCIOCAVI	KABELBAUM MAZO CABLES

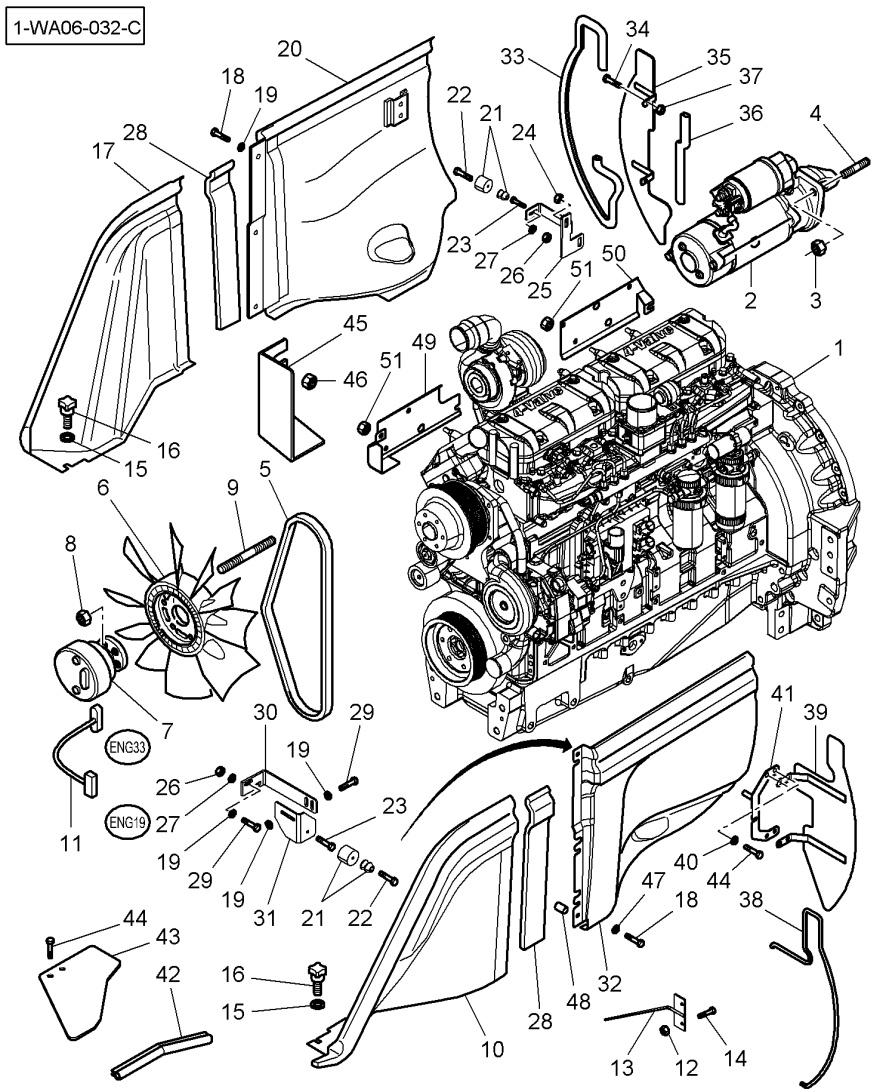

12	339030X1			**2**	NUT	ECROU DADO	MUTTER TUERCA
13	4276881M3			**1**	SUPPORT	SUPPORT SOPPORTO	TRAGER SOPORTE
14	339560X1	M6X16		**2**	HEX. SOCK. SCREW	VIS TETE HEX VITE PARKER	ZYLINDERSCHRAUBE TORN.CAB.HUECA
15	5016831M1			**2**	WASHER	RONDELLE RONDELLA	SCHEIBE ARANDELA
16	5016819M1			**2**	BUTTON	BOUTON BOTTONE	KNOPFTASTE BOTON
17	5017890M2	▶		**1**	COWL	GARANT CAPPOTTATURA	AUFSATZ CAPERUZA
18	339124X1	M8X16		**1**	HEX. SOCK. SCREW	VIS TETE HEX VITE PARKER	ZYLINDERSCHRAUBE TORN.CAB.HUECA
19*	390972X1	➡|	R292070	**12**	FLAT WASHER	RONDELLE PLATE RONDELLE PIANA	UNTERLEGSCHEIBEN ARANDELA PLANA
19*	390972X1	|➡	R292071	**9**	FLAT WASHER	RONDELLE PLATE RONDELLE PIANA	UNTERLEGSCHEIBEN ARANDELA PLANA
20	4277662P92	▶		**1**	PANEL	PANNEAU PANNELLO	WANDPLATTE PANEL
21	72502409			**2**	RUBBER	CAOUTCHOUC GOMMA	GUMMI CAUCHO
22	1440350X1	M8X20		**2**	SCREW METRIC	VIS METRIQUE VITE METRICA	SCHRAUBE METR TORNILLO METRICO
23	3009283X1	M6X30		**2**	SCREW	VIS VITE	SCHRAUBE TORNILLO
24	339402X1			**1**	NUT SPECIAL	ECROU SPECIAL DADO SPECIALE	SPEZIALMUTTER TUERCA ESPECIAL
25	4277660M1	▶		**1**	SUPPORT	SUPPORT SOPPORTO	TRAGER SOPORTE
26	1441500X1			**2**	TOP LOCKNUT	ECROU AUTOFREINE DADO DI TESTA	SELBSTS.MUTTER CONTRATUERCA SUP
27	391038X1			**2**	FLAT WASHER	RONDELLE PLATE RONDELLE PIANA	UNTERLEGSCHEIBEN ARANDELA PLANA
28	5017406M1			**2**	GASKET	JOINT GIUNTO PIANO	FLACHDICHTUNG JUNTA PLANA
29	339123X1	M8X20		**4**	HEX. SOCK. SCREW	VIS TETE HEX VITE PARKER	ZYLINDERSCHRAUBE TORN.CAB.HUECA
30	4273770M1	◀		**1**	SUPPORT	SUPPORT SOPPORTO	TRAGER SOPORTE
31	4277658M1	◀		**1**	SUPPORT	SUPPORT SOPPORTO	TRAGER SOPORTE
32	5016552P94	◀		**1**	PANEL	PANNEAU PANNELLO	WANDPLATTE PANEL
32*	5016552P95	◀	➡| R292070 MAY-2007	**1**	PANEL	PANNEAU PANNELLO	WANDPLATTE PANEL
33	4275294M1	◀▶	945MM	**1**	GASKET	JOINT GIUNTO PIANO	FLACHDICHTUNG JUNTA PLANA
34	339124X1	M8 X 16		**1**	HEX. SOCK. SCREW	VIS TETE HEX VITE PARKER	ZYLINDERSCHRAUBE TORN.CAB.HUECA
35	4280659M1	▶		**1**	COWL	GARANT CAPPOTTATURA	AUFSATZ CAPERUZA

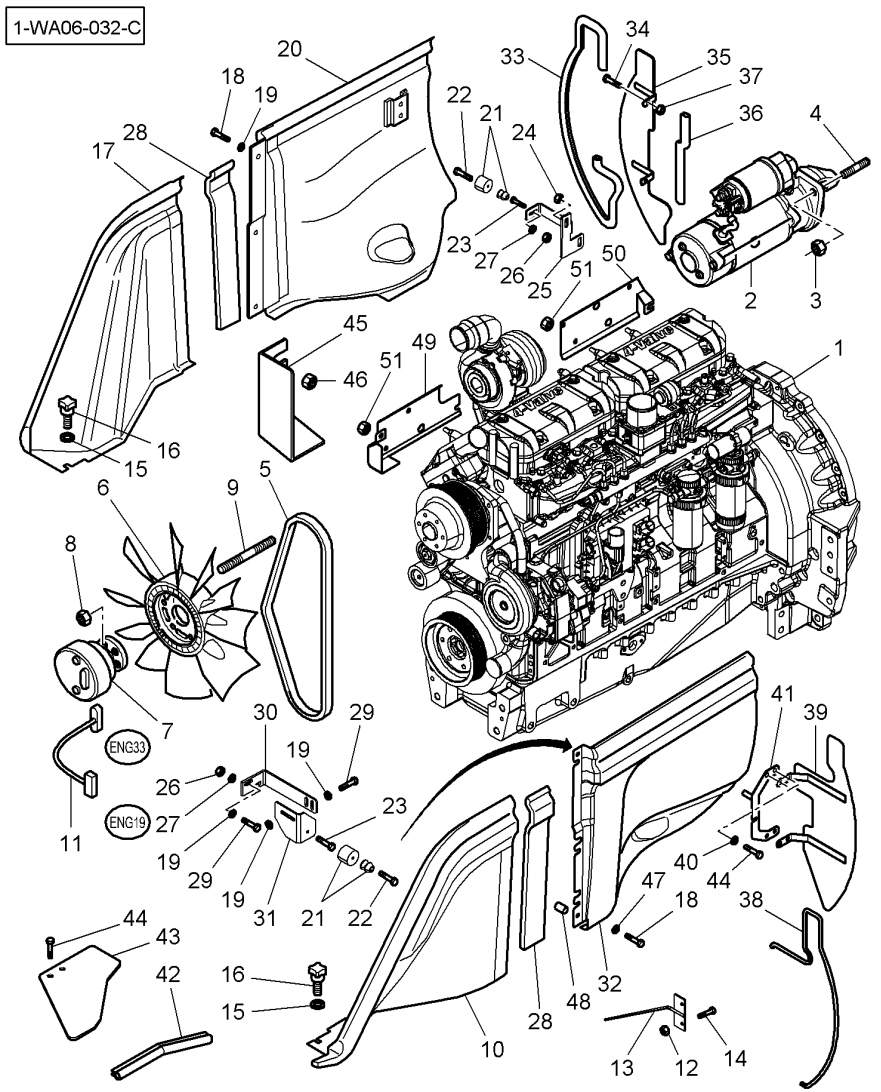

36	3814902M1	◄►	210MM	**1**	PROTECTOR	PROTECTEUR PROTETTORE SCHUTZ PROTECTOR
37	339169X1			**1**	NUT	ECROU DADO MUTTER TUERCA
38	4282875M1	◄►	1475MM	**1**	GASKET	JOINT GIUNTO PIANO FLACHDICHTUNG JUNTA PLANA
39*	4282874M2	◄		**1**	COWL	GARANT CAPPOTTATURA AUFSATZ CAPERUZA
40	390972X1			**4**	FLAT WASHER	RONDELLE PLATE RONDELLE PIANA UNTERLEGSCHEIBEN ARANDELA PLANA
41	4282877M1			**1**	SUPPORT	SUPPORT SOPPORTO TRAGER SOPORTE
42	3810017M1	◄►	365MM	**2**	SEAL	JOINT ETANCHEITE GIUNTO ROTONDO DICHTRING JUNTA REDONDA
43	4281078M1			**2**	COWL	GARANT CAPPOTTATURA AUFSATZ CAPERUZA
44	339124X1		M8 X 16	**8**	HEX. SOCK. SCREW	VIS TETE HEX VITE PARKER ZYLINDERSCHRAUBE TORN.CAB.HUECA
45	4276812M4			**1**	COWL	GARANT CAPPOTTATURA AUFSATZ CAPERUZA
46	1441932X1		M10	**2**	NUT METRIC	ECROU METRIQUE DADO METRICO MUTTER METRISCH TUERCA METRICO
47*	391039X1	➡	R292071	**3**	FLAT WASHER	RONDELLE PLATE RONDELLE PIANA UNTERLEGSCHEIBEN ARANDELA PLANA
48*	3011984X1	➡	R292071	**3**	SPACER	ENTRETOISE DISTANZIALE ABSTANDSTUECK DISCO ESPACIADOR
49*	4288713M2	➡ ➡	MT655B-18-DEC-06 MT665B-12-DEC-06	**1**	COWL	GARANT CAPPOTTATURA AUFSATZ CAPERUZA
50*	4288714M2	➡ ➡	MT655B-18-DEC-06 MT665B-12-DEC-06	**1**	COWL	GARANT CAPPOTTATURA AUFSATZ CAPERUZA
51*	339402X1	➡ ➡	MT655B-18-DEC-06 MT665B-12-DEC-06	**8**	NUT SPECIAL	ECROU SPECIAL DADO SPECIALE SPEZIALMUTTER TUERCA ESPECIAL
			M10			

[A] INCLUDES FLYWHEEL
COMPREND LE VOLANT MOTEUR
ENTHALTE SCHWUNGRAD
COMPRENDE VOLANO MOTORE
INCLUYE VOLANTE MOTO

[B] THE APPROPRIATE SAFETY DECALS MUST BE ORDERED AND FITTED TO THIS PART
CETTE PIECE DOIT ETRE IMPERATIVEMENT COMMANDEE AVEC SA DECALCOMANIE DE SECURITE
DIESES TEIL MUSS UNBEDINGT ZUSAMMEN MIT DEM SICHER HEITSHINWEISSCHILD BESTELLT WERDEN
QUESTA PARTE DEVE ESSERE IMPERATIVAMENTO COMANDATA CON LA SUA DECALCOMANIA SICUREZZA
ESTA PARTE DEBE ENCARGARSE IMPERATIVAMENTE CON SU CALCOMANIA DE SEGURIDAD

[C] NOT ILLUSTRATED
NON ILLUSTRE
NICHT ILLUSTRIERT
NON ILLUSTRATO
NO ILUSTRADO

Alternator & Bracket
Alternateur Et Support
Drehstromlichtmaschine Und Support
Alternatore Cone Soporte
Alternador Y Support

10-10

1-WA10-013-A

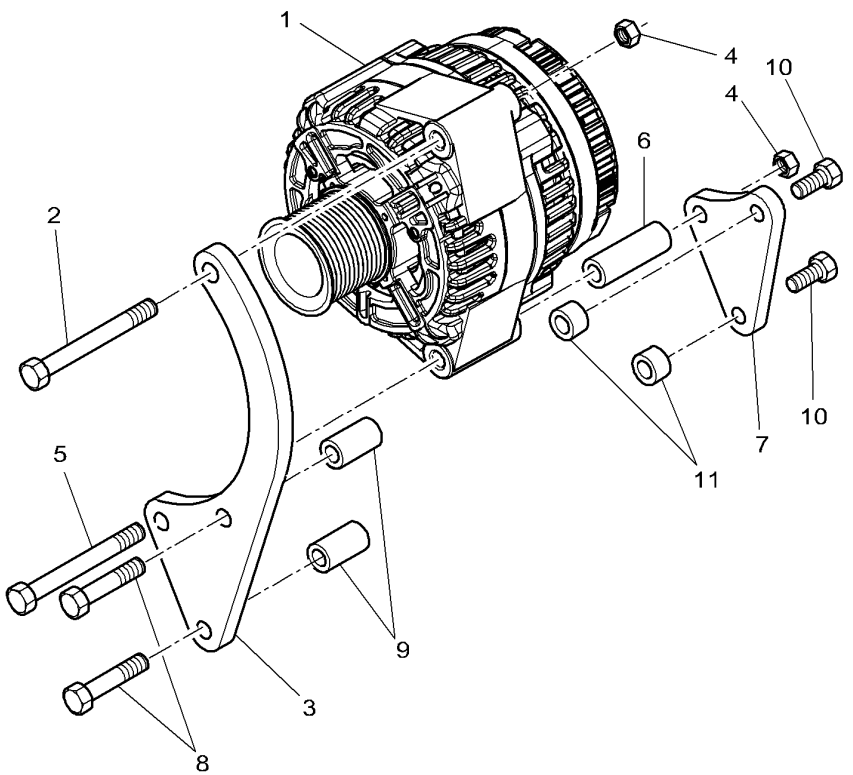

1	**3789983M91**	150 AMP 👁 10-15 No 0	**1**	ALTERNATOR	ALTERNATEUR ALTERNATORE	WECHSELSTROMDYN. ALTERNADOR
2	3009502X1	M10 X 80	**1**	HEX. SOCK. SCREW	VIS TETE HEX VITE PARKER	ZYLINDERSCHRAUBE TORN.CAB.HUECA
3	3789862M1		**1**	SUPPORT	SUPPORT SOPPORTO	TRAGER SOPORTE
4	339402X1	M10	**2**	NUT SPECIAL	ECROU SPECIAL DADO SPECIALE	SPEZIALMUTTER TUERCA ESPECIAL
5	3002813X1	M10 X 145	**1**	HEX. SOCK. SCREW	VIS TETE HEX VITE PARKER	ZYLINDERSCHRAUBE TORN.CAB.HUECA
6	4280581M1	∅ 10.5-20 X 56	**1**	SPACER	ENTRETOISE DISTANZIALE	ABSTANDSTUECK DISCO ESPACIADOR
7	3789861M1		**1**	SUPPORT	SUPPORT SOPPORTO	TRAGER SOPORTE
8	339132X1	M8 X 75	**2**	HEX. SOCK. SCREW	VIS TETE HEX VITE PARKER	ZYLINDERSCHRAUBE TORN.CAB.HUECA
9	4280582M1	∅ 8.5-16 X 25	**2**	SPACER	ENTRETOISE DISTANZIALE	ABSTANDSTUECK DISCO ESPACIADOR
10	339009X1	M8 X 35	**2**	HEX. SOCK. SCREW	VIS TETE HEX VITE PARKER	ZYLINDERSCHRAUBE TORN.CAB.HUECA
11	3011180X1		**2**	SPACER	ENTRETOISE DISTANZIALE	ABSTANDSTUECK DISCO ESPACIADOR

Alternator
Alternateur
Drehstromlichtmaschine
Alternatore
Alternador

10-15

150 Amp
150 Amp
150 Amp
150 Amp
150 Amp

1-WC35-005-C

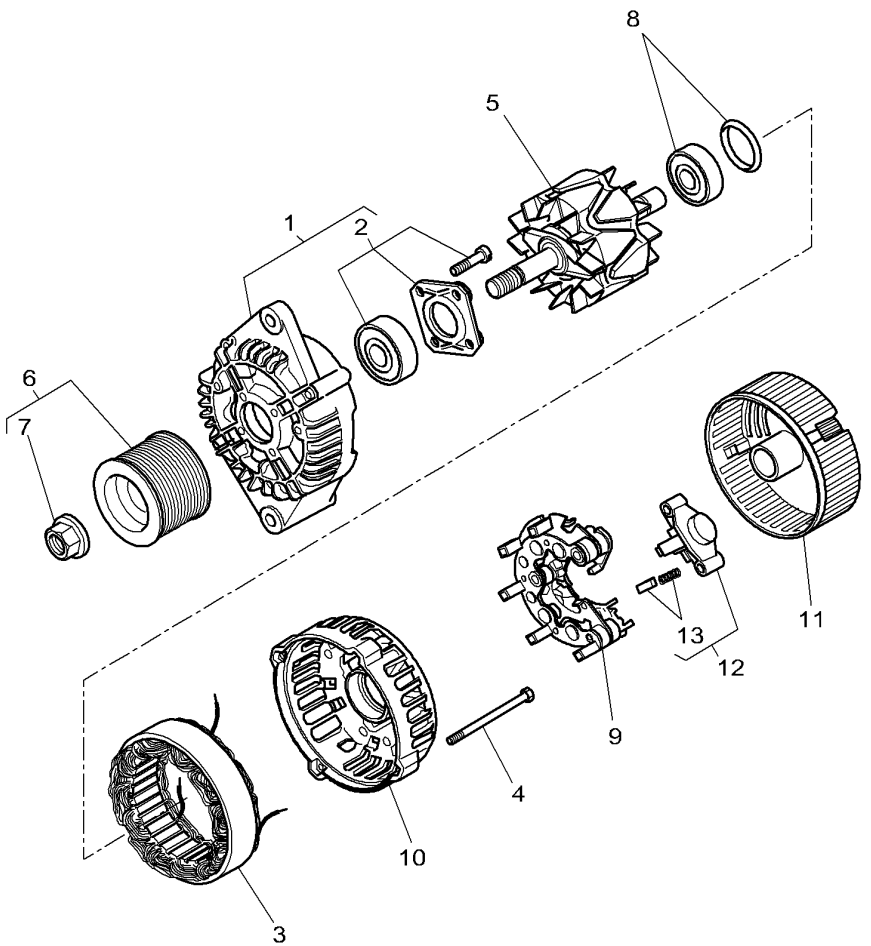

0	**3789983M91**			**1** ALTERNATOR	ALTERNATEUR ALTERNATORE	WECHSELSTROMDYN. ALTERNADOR
1			REF. 0	**1** KIT, DRIVE	JEU COMMANDES KIT DI GUIDA	ANTRIEBSSATZ TRANSMISION JUEG
2	3907186M91	1		**1** KIT, BEARING	JEU COUSSINETS KIT CUSCINETTO	LAGERSATZ JUEGO COJINETES
3			REF. 0	**1** STATOR	STATOR STATORE	STATOR ESTATOR
4	3907187M1			**1** BOLT	BOULON BULLONE	BOLZEN BULON
5			REF. 0	**1** ROTOR	ROTOR ROTORE	ROTOR ROTOR
6	3907188M91			**1** PULLEY	POULIE PULEGGIA	RIEMENSCHEIBE POLEA
7		6	REF. 6	**1** PARTS PACK	JEU PIECES PACCO RICAMBI	SATZ TEILE PAQUETE PIEZAS
8	3907193M91			**1** KIT, BEARING	JEU COUSSINETS KIT CUSCINETTO	LAGERSATZ JUEGO COJINETES
9	3907190M91			**1** RECTIFIER	REDRESSEUR RADDRIZZATORE	GLEICHRICHTER RECTIFICADOR
10			REF. 0	**1** HOUSING	CARTER CARCASSA	GEHAEUSE ALOJAMIENTO
11	3907191M1			**1** COVER	COUVERCLE COPERCHIO	ABDECKUNG. CUBIERTA
12	3907192M91			**1** REGULATOR	REGULATEUR REGOLATORE	REGLER REGULADOR
13		12	REF. 12	**1** BRUSH	BALAI SPAZZOLA	BUERSTE ESCOBILLA

Starter
Demarreur
Anlasser
Motorino Di Avviamento
Arranque

10-20

1-WC51-001-A

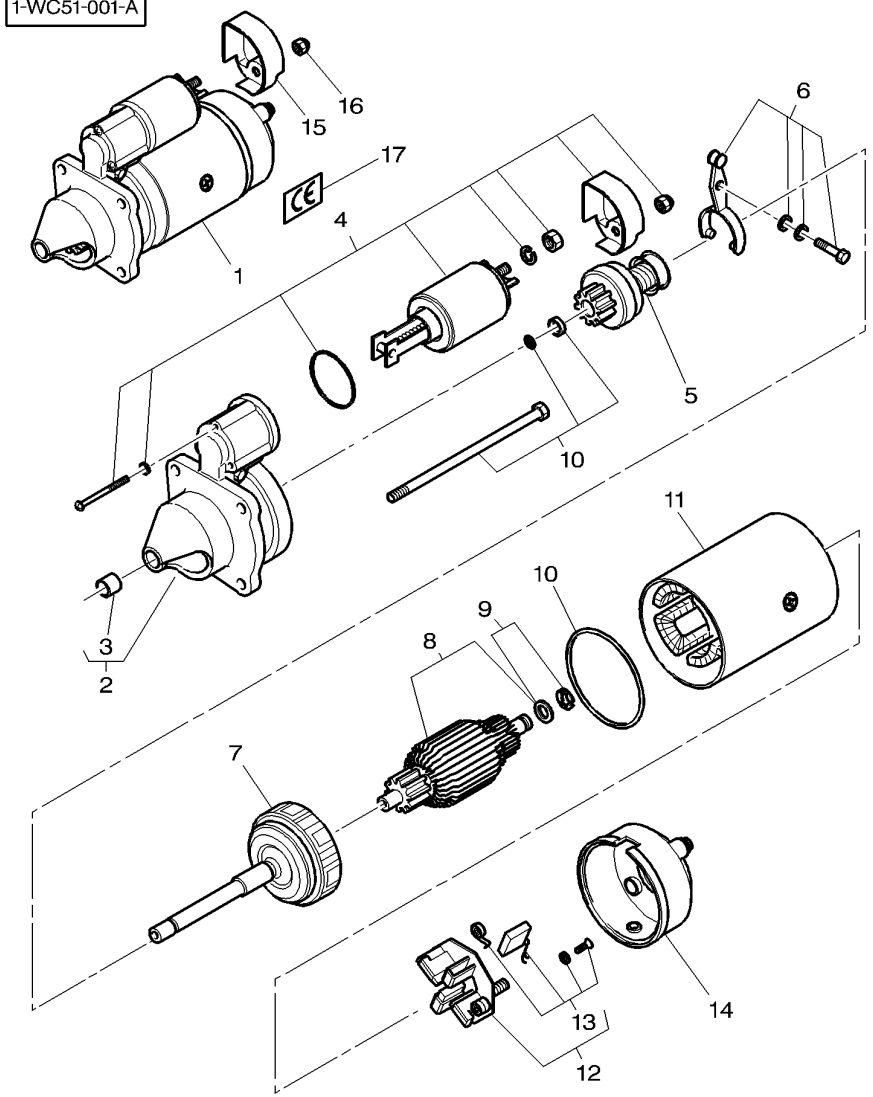

1	*	3823621M91	[A]	**1**	STARTERMOTOR	DEMARREUR MOTORINO AVVIAM.	ANLASSER MOTOR ARRANQUE
2			1 REF. 1	**1**	HOUSING	CARTER CARCASSA	GEHAEUSE ALOJAMIENTO
3		3903761M1	2	**1**	BEARING	COUSSINET CUSCINETTO	LAGER COJINETE
4	*	3904366M91	1	**1**	KIT, SOLENOID	JEU SOLENOIDE KIT SOLENOIDE	SOLENOID-SATZ JGO SOLENOIDE
5		3904360M1	1	**1**	DRIVE GEAR	ENGRENAGE DE CDE INGRANAGGIO TRAS	ANTRIEBSRAD PINON DE CONTROL
6		3904361M91	1	**1**	KIT, LEVER	JEU LEVIER KIT LEVETTA	SATZ HEBEL JUEGO, PALANCA
7			1 REF. 1	**1**	REDUCER	REDUCTEUR RIDUTTORE	REDUZIERSTUECK REDUCCION
8			1 REF. 1	**1**	ROTOR	ROTOR ROTORE	ROTOR ROTOR
9		3904362M91	1	**1**	KIT, BEARING	JEU COUSSINETS KIT CUSCINETTO	LAGERSATZ JUEGO COJINETES
10		3904363M91	1	**1**	PARTS PACK	JEU PIECES PACCO RICAMBI	SATZ TEILE PAQUETE PIEZAS
11			1 REF. 1	**1**	STATOR	STATOR STATORE	STATOR ESTATOR
12		3904364M91	1	**1**	HOLDER	PIECE SUPPORT SUPPORTO DI BASE	HALTER SUJETADOR
13		3904365M91	12	**1**	KIT, BRUSH	JEU BALAI KIT SPAZZOLA	BUERSTENSATZ ESCOBILLAS JUEGO
14			1 REF. 1	**1**	COVER	COUVERCLE COPERCHIO	ABDECKUNG. CUBIERTA
15		3786093M1		**1**	PROTECTOR	PROTECTEUR PROTETTORE	SCHUTZ PROTECTOR
16		3786092M1	M10	**1**	NUT	ECROU DADO	MUTTER TUERCA
17	*	3788193M1		**1**	LABEL	LABEL ETICHETTA	ETIKETT ETIQUETA

[A] THE APPROPRIATE SAFETY DECALS MUST BE ORDERED AND FITTED TO THIS PART
CETTE PIECE DOIT ETRE IMPERATIVEMENT COMMANDEE AVEC SA DECALCOMANIE DE SECURITE
DIESES TEIL MUSS UNBEDINGT ZUSAMMEN MIT DEM SICHER HEITSHINWEISSCHILD BESTELLT WERDEN
QUESTA PARTE DEVE ESSERE IMPERATIVAMENTO COMANDATA CON LA SUA DECALCOMANIA SICUREZZA
ESTA PARTE DEBE ENCARGARSE IMPERATIVAMENTE CON SU CALCOMANIA DE SEGURIDAD

Cylinder Block
Bloc Cylindre
Zylinderblock
Blocco Cilindri
Bloque De Cilindro

10-25

1-WH01-011-B

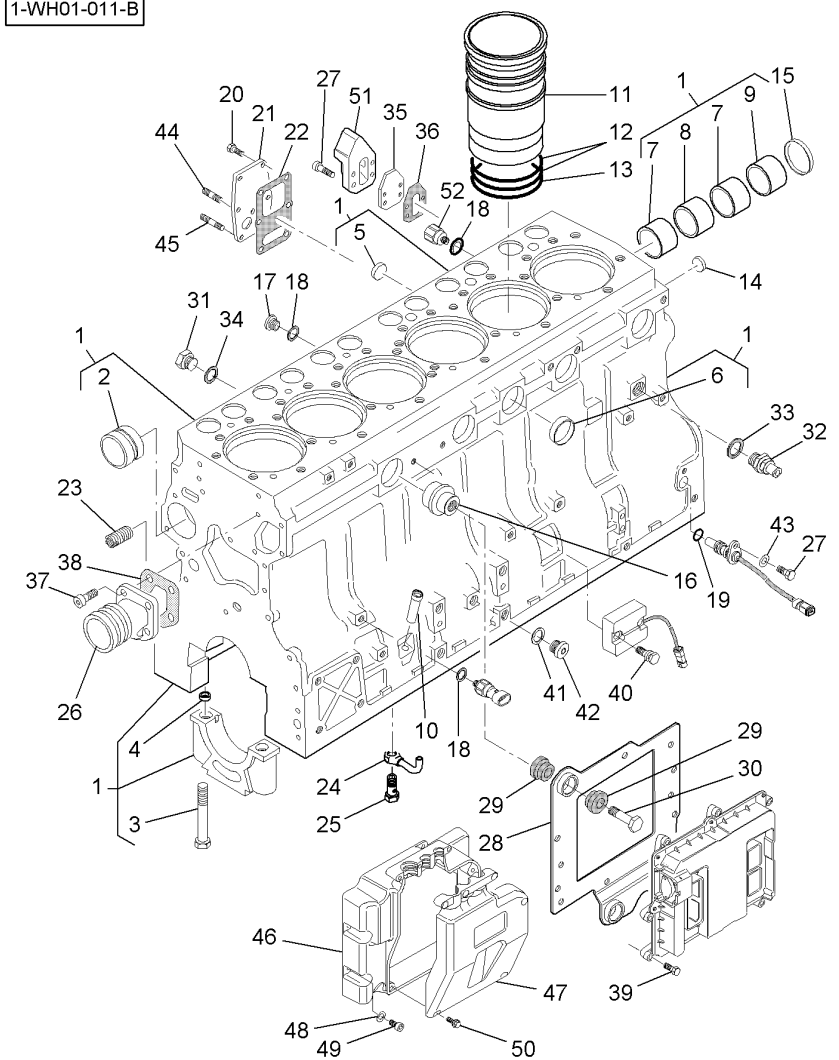

1	V836867046			**1**	CYLINDER BLOCK	BLOC CYLINDRE BLOCCO CILINDRI	ZYLINDERBLOCK BLOQUE CILINDRO
2	V836866069	1		**1**	BUSH	BAGUE BOCCOLA	RING CASQUILLO
2	V836866036	⧗	+0,4 MM	**X**	BUSH	BAGUE BOCCOLA	RING CASQUILLO
3	V529903180	1		**14**	SCREW	VIS VITE	SCHRAUBE TORNILLO
4	V836214478	1		**24**	BUSH	BAGUE BOCCOLA	RING CASQUILLO
5	V640016018	1		**1**	PLUG	BOUCHON TAPPO	STOPFEN TAPON
6	V640016040	1		**4**	PLUG	BOUCHON TAPPO	STOPFEN TAPON
7	V836852460	1		**2**	BUSH	BAGUE BOCCOLA	RING CASQUILLO
8	V836852459	1		**1**	BUSH	BAGUE BOCCOLA	RING CASQUILLO
9	V836852461	1		**1**	BUSH	BAGUE BOCCOLA	RING CASQUILLO
10	V836666910	➡|	S19673	**1**	PIPE	TUYAU TUBO	TUBE TUBO
10*	V837070393	➡		S19674	**1**	PIPE	TUYAU TUBO	TUBE TUBO
11	V836867048				**6**	LINER	CHEMISE CAMICIA	BUECHSE CAMISA
11	V836867050	⧗	9,08 MM	**X**	LINER	CHEMISE CAMICIA	BUECHSE CAMISA
12	V836855446			**12**	O RING	JOINT TORIQUE GIUNTO DI TENUTA	O-RING JUNTA TOROIDAL
13	V836855447			**6**	O RING	JOINT TORIQUE GIUNTO DI TENUTA	O-RING JUNTA TOROIDAL
14	V640016016			**4**	PLUG	BOUCHON TAPPO	STOPFEN TAPON
15	V836852744			**1**	PLUG	BOUCHON TAPPO	STOPFEN TAPON
16	V837069057			**1**	PLUG	BOUCHON TAPPO	STOPFEN TAPON
17	V640325110			**5**	PLUG	BOUCHON TAPPO	STOPFEN TAPON
18*	V615871014			**6**	O RING	JOINT TORIQUE GIUNTO DI TENUTA	O-RING JUNTA TOROIDAL
19	V614601524			**1**	O RING	JOINT TORIQUE GIUNTO DI TENUTA	O-RING JUNTA TOROIDAL
20	V528801380	M8 X 20		**5**	SCREW	VIS VITE	SCHRAUBE TORNILLO
21	V836855678			**1**	COVER	COUVERCLE COPERCHIO	ABDECKUNG. CUBIERTA
22	V836322852			**1**	GASKET	JOINT GIUNTO PIANO	FLACHDICHTUNG JUNTA PLANA
23	V836859153			**1**	NIPPLE	GRAISSEUR COUDE NIPPLO	NIPPEL NIPLE

Cylinder Block
Bloc Cylindre
Zylinderblock
Blocco Cilindri
Bloque De Cilindro

10-25

1-WH01-011-B

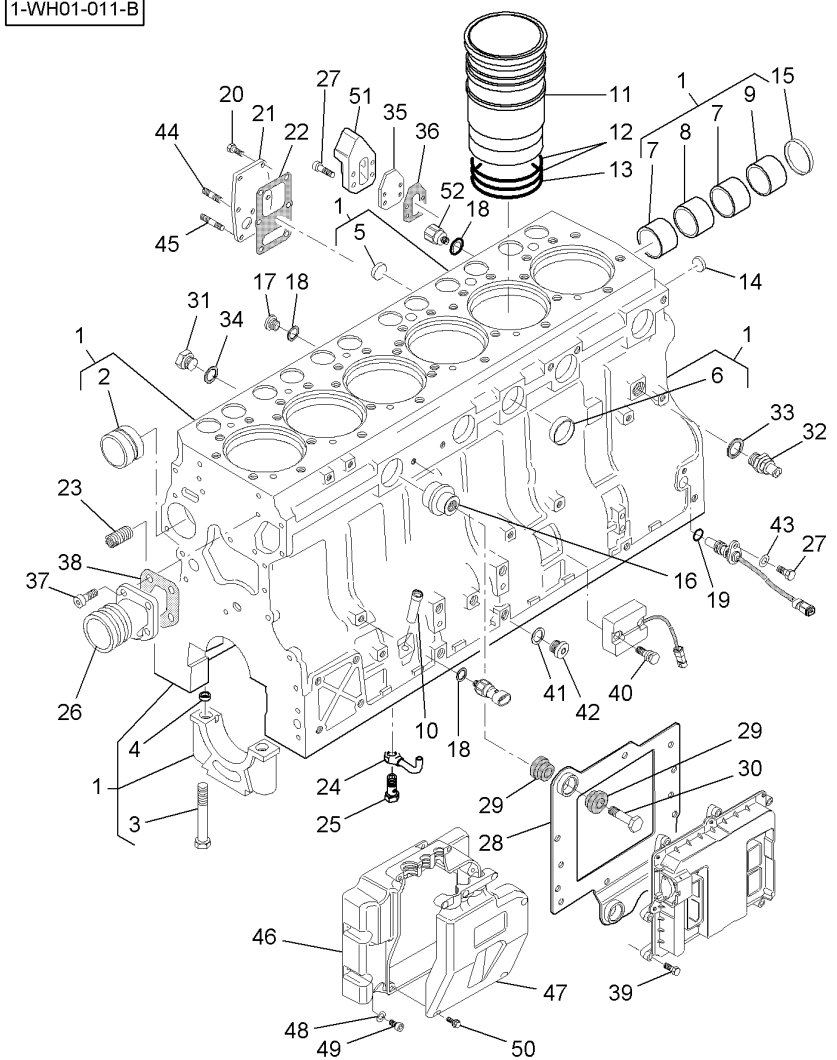

24	V837070021		**6**	PIPE	TUYAU	TUBE
					TUBO	TUBO
25	V836338601		**6**	VALVE	SOUPAPE	VENTIL
					VALVOLA	VALVULA
26	V836855629		**1**	SLEEVE	MANCHON	HUELSE
					MANICOTTO	MANGUITO
27*	V528801362	M8 X 16	**1**	SCREW	VIS	SCHRAUBE
					VITE	TORNILLO
27*	V528801362	➡ S19673 M8 X 16	**4**	SCREW	VIS	SCHRAUBE
					VITE	TORNILLO
27*	V581804630	➡ S19674 M8 X 30	**4**	SCREW	VIS	SCHRAUBE
					VITE	TORNILLO
28	V837070147		**1**	BRACKET	SUPPORT FIXATION	HALTEARM
					STAFFETTA	SOPORTE
29	V837069052		**6**	BUSH	BAGUE	RING
					BOCCOLA	CASQUILLO
30	V837069056		**3**	SCREW	VIS	SCHRAUBE
					VITE	TORNILLO
31	V836119079		**1**	PLUG	BOUCHON	STOPFEN
					TAPPO	TAPON
32	V836664377		**1**	COCK	ROBINET	ABSPERRHAHN
					RUBINETTO	AGUJA INDICADORA
33	V615881824		**1**	SEAL	JOINT ETANCHEITE	DICHTRING
					GIUNTO ROTONDO	JUNTA REDONDA
34	V615881620		**1**	SEAL	JOINT ETANCHEITE	DICHTRING
					GIUNTO ROTONDO	JUNTA REDONDA
35	V836866957		**1**	COVER	COUVERCLE	ABDECKUNG.
					COPERCHIO	CUBIERTA
36	V836866958		**1**	GASKET	JOINT	FLACHDICHTUNG
					GIUNTO PIANO	JUNTA PLANA
37	V581804600	M8 X 20	**4**	SCREW	VIS	SCHRAUBE
					VITE	TORNILLO
38	V836855554		**1**	GASKET	JOINT	FLACHDICHTUNG
					GIUNTO PIANO	JUNTA PLANA
39	V529801102	M6 X 25	**8**	SCREW	VIS	SCHRAUBE
					VITE	TORNILLO
40	V837070197		**2**	SCREW	VIS	SCHRAUBE
					VITE	TORNILLO
41	V615881420		**1**	GASKET	JOINT	FLACHDICHTUNG
					GIUNTO PIANO	JUNTA PLANA
42	V640325014		**1**	PLUG	BOUCHON	STOPFEN
					TAPPO	TAPON
43	V500050840		**1**	WASHER	RONDELLE	SCHEIBE
					RONDELLA	ARANDELA
44	V546801360	M8 X 16	**1**	BOLT	BOULON	BOLZEN
					BULLONE	BULON
45	V546801400	M8 X 25	**1**	BOLT	BOULON	BOLZEN
					BULLONE	BULON
46	V837070285		**1**	COVER	COUVERCLE	ABDECKUNG.
					COPERCHIO	CUBIERTA
47	V837070286		**1**	COVER	COUVERCLE	ABDECKUNG.
					COPERCHIO	CUBIERTA

Cylinder Block
Bloc Cylindre
Zylinderblock
Blocco Cilindri
Bloque De Cilindro

10-25

1-WH01-011-B

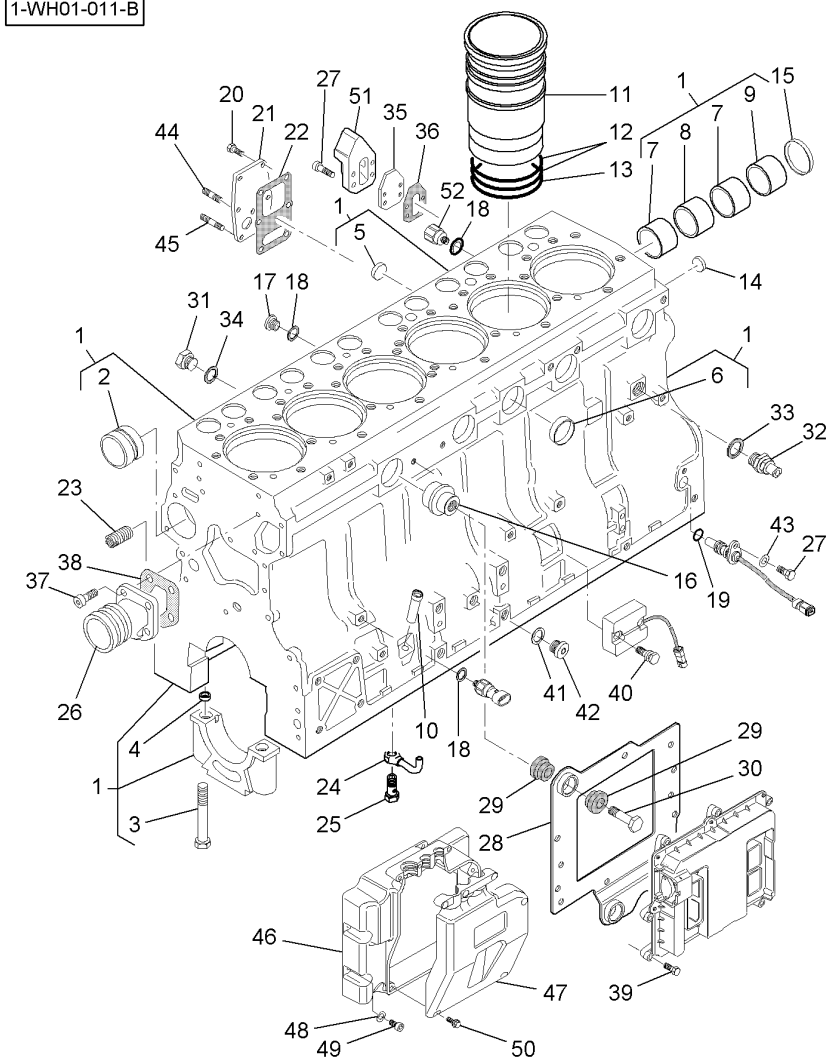

48	V500150642		**5**	WASHER	RONDELLE RONDELLA	SCHEIBE ARANDELA
49	V581804182	M6 X 16	**5**	SCREW	VIS VITE	SCHRAUBE TORNILLO
50	V590253388	5.1 X 14	**6**	SCREW	VIS VITE	SCHRAUBE TORNILLO
51*	V837067696	➡ S19674	**1**	ADAPTER	RACCORD REDUC. ADAPTER	ADAPTER ADAPTER
52*	V836120022	➡ S19674	**1**	CONNECTION	CONNEXION CONNESSIONE	VERBINDUNG CONEXION

Timing Gear Housing
Carter De Distribution
Steuerradgehause
Carter Di Distribuzione
Carter De La Distribucion

10-30

1-WH20-007-A

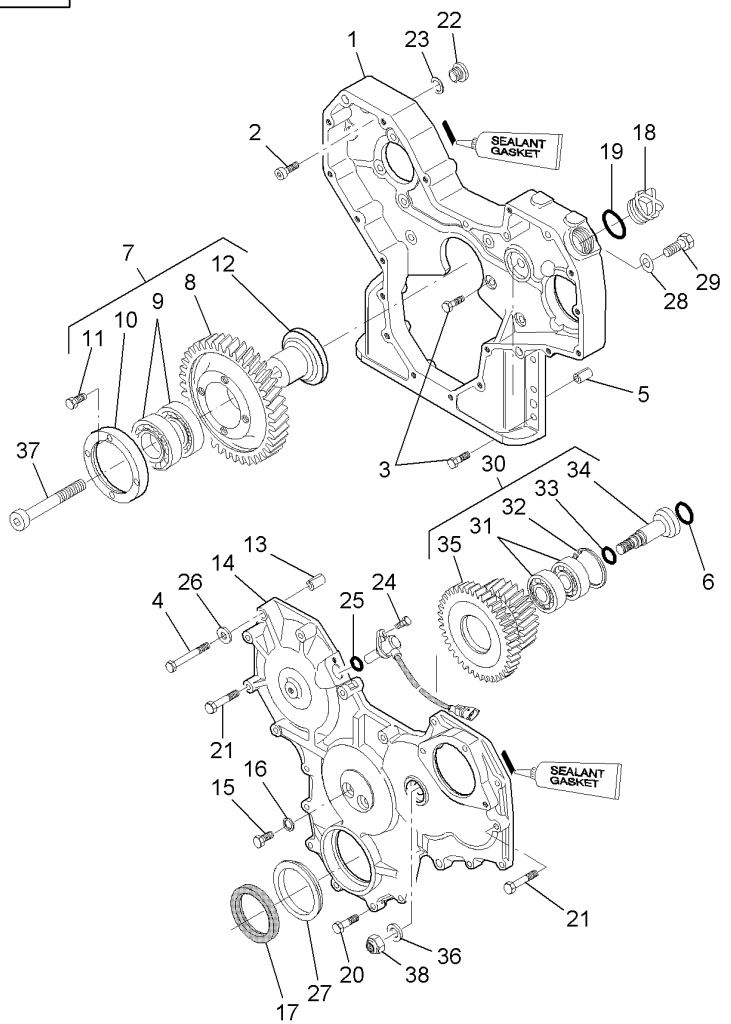

1	V837070064		**1**	HOUSING	CARTER CARCASSA	GEHAEUSE ALOJAMIENTO
2	V581804620	M8 X 25	**2**	SCREW	VIS VITE	SCHRAUBE TORNILLO
3	V528801400	M8 X 25	**14**	SCREW	VIS VITE	SCHRAUBE TORNILLO
4	V529801470	M8 X 60	**2**	SCREW	VIS VITE	SCHRAUBE TORNILLO
5	V598359850		**2**	PIN	GOUPILLE COPPIGLIA	STIFT PASADOR
6	**V614601924**		**1**	O RING	JOINT TORIQUE GIUNTO DI TENUTA	O-RING JUNTA TOROIDAL
7	V837070001		**1**	GEAR	ENGRENAGE INGRANAGGIO	ZAHNRAD ENGRANAJE
8	V837070000	7	**1**	GEAR	ENGRENAGE INGRANAGGIO	ZAHNRAD ENGRANAJE
9	V610072109	7	**1**	BEARING ASSY	ROULEMENT CUSCINETTO COMPL	RADIALLAGER RODAMIENTO RAD
10	V836855565	7	**1**	RING	ANNEAU ANELLO	RING. ANILLO
11	V528901400	7 M8 X 16	**4**	SCREW	VIS VITE	SCHRAUBE TORNILLO
12	V836855562	7	**1**	SHAFT	ARBRE ALBERO	WELLE ARBOL
13	V598359860	➡ S19673	**2**	PIN	GOUPILLE COPPIGLIA	STIFT PASADOR
13*	V598359860	➡ S19674	**2**	PIN	GOUPILLE COPPIGLIA	STIFT PASADOR
14	V837070168		**1**	COVER	COUVERCLE COPERCHIO	ABDECKUNG. CUBIERTA
15	V528801380	M8 X 20	**2**	SCREW	VIS VITE	SCHRAUBE TORNILLO
16	V615870814		**2**	WASHER	RONDELLE RONDELLA	SCHEIBE ARANDELA
17	V836840883		**1**	OIL SEAL	BAGUE ETANCHEITE BOCCOLA PARAOLIO	OELDICHTRING BUJE RETENACEITE
18	V836017927		**1**	PLUG	BOUCHON TAPPO	STOPFEN TAPON
19	V614603540		**1**	O RING	JOINT TORIQUE GIUNTO DI TENUTA	O-RING JUNTA TOROIDAL
20	V528801410	M8 X 30	**11**	ADJUSTING SCREW	VIS REGLAGE VITE DI REGOLAZ.	EINSTELLSCHRAUBE TORNILLO AJUSTA
21	V529801440	M8 X 45	**7**	SCREW	VIS VITE	SCHRAUBE TORNILLO
22	V640325018		**1**	PLUG	BOUCHON TAPPO	STOPFEN TAPON
23	V615881822	M8 X 95	**1**	SEAL	JOINT ETANCHEITE GIUNTO ROTONDO	DICHTRING JUNTA REDONDA
24	V528801062	M6 X 16	**1**	BOLT	BOULON BULLONE	BOLZEN BULON
25	V614601524		**1**	O RING	JOINT TORIQUE GIUNTO DI TENUTA	O-RING JUNTA TOROIDAL

Timing Gear Housing
Carter De Distribution
Steuerradgehause
Carter Di Distribuzione
Carter De La Distribucion

10-30

1-WH20-007-A

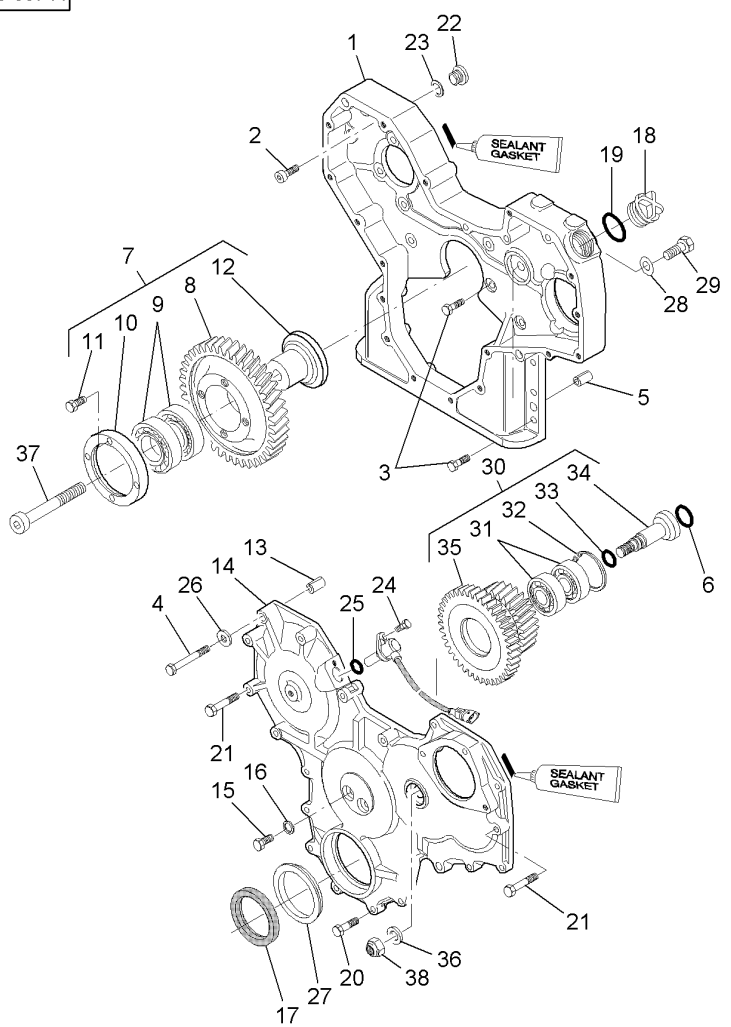

26	V836120989		**2**	WASHER	RONDELLE RONDELLA	SCHEIBE ARANDELA
27	V836855636		**1**	GASKET	JOINT GIUNTO PIANO	FLACHDICHTUNG JUNTA PLANA
28	V500951200		**1**	WASHER	RONDELLE RONDELLA	SCHEIBE ARANDELA
29	V528902200	M12 X 25	**1**	SCREW	VIS VITE	SCHRAUBE TORNILLO
30	V837070086	➡ S19673	**1**	GEAR	ENGRENAGE INGRANAGGIO	ZAHNRAD ENGRANAJE
30*	V837070072	➡ S19674	**1**	GEAR	ENGRENAGE INGRANAGGIO	ZAHNRAD ENGRANAJE
31	V610073040	30	**2**	BEARING	COUSSINET CUSCINETTO	LAGER COJINETE
32	V617330052	30	**1**	CIRCLIP	CIRCLIP ANNELLO ELASTICO	SEEGERING GRAPA CIRCULAR
33	V614601324	30	**1**	O RING	JOINT TORIQUE GIUNTO DI TENUTA	O-RING JUNTA TOROIDAL
34	V837069069	30	**1**	SHAFT	ARBRE ALBERO	WELLE ARBOL
35*	V837070112	30 ➡ S19673	**1**	GEAR	ENGRENAGE INGRANAGGIO	ZAHNRAD ENGRANAJE
35*	V837070113	30 ➡ S19674	**1**	GEAR	ENGRENAGE INGRANAGGIO	ZAHNRAD ENGRANAJE
36	V837069070		**1**	WASHER	RONDELLE RONDELLA	SCHEIBE ARANDELA
37	V581705910	M14 X 70	**1**	SCREW	VIS VITE	SCHRAUBE TORNILLO
38	V504601400	M14	**1**	NUT	ECROU DADO	MUTTER TUERCA

Crankshaft, Piston & Connecting Rods
Vilebrequin, Piston & Bielles
Kurbelwelle, Kolben & Pleuel
Albero Motore, Stantuffo & Bielli
Ciguenal, Piston & Bielas

10-35

1-WH02-013-A

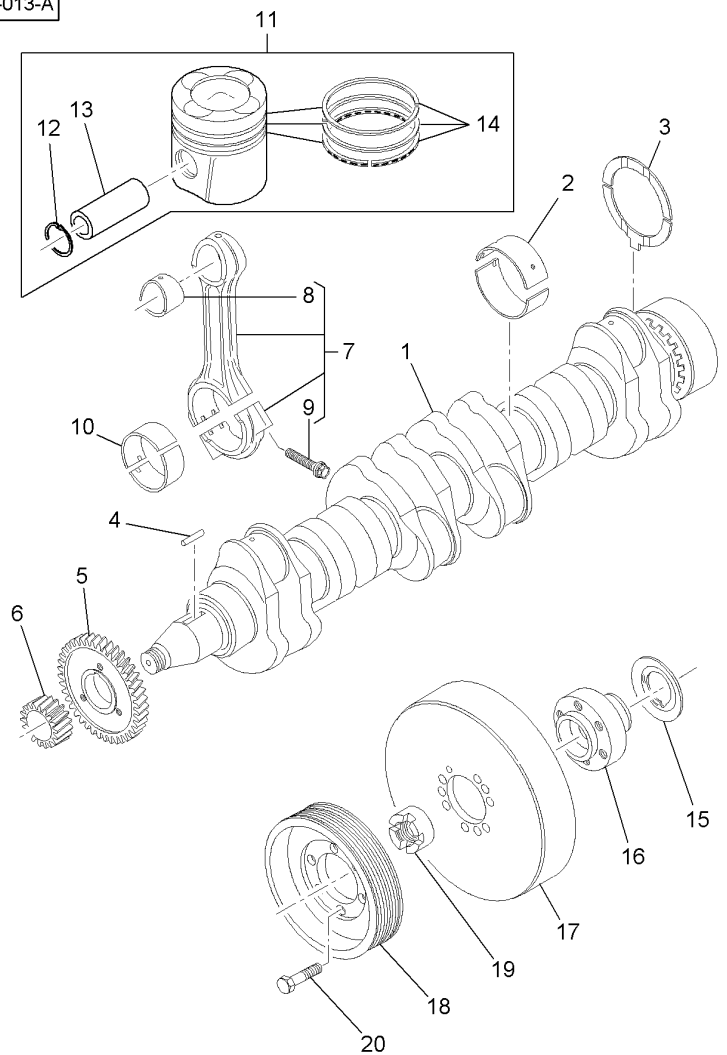

1	V837069088		**1**	CRANKSHAFT	VILEBREQUIN ALBERO A GOMITO	KURBELWELLE CIGÜEÑAL
2	V836840944		**7**	MAIN BEARING	COUSSINET PRINC BRONZINE PRINCIP	HAUPTLAGER COJINETE PRINCIP
2	V836840978	∅ 89,735 MM 89,770 MM	**X**	MAIN BEARING	COUSSINET PRINC BRONZINE PRINCIP	HAUPTLAGER COJINETE PRINCIP
2	V836840979	∅ 89,485 MM 89,520 MM	**X**	MAIN BEARING	COUSSINET PRINC BRONZINE PRINCIP	HAUPTLAGER COJINETE PRINCIP
2	V836840980	∅ 88,985 MM 89,020 MM	**X**	MAIN BEARING	COUSSINET PRINC BRONZINE PRINCIP	HAUPTLAGER COJINETE PRINCIP
2	V836840981	∅ 88,485 MM 88,520 MM	**X**	MAIN BEARING	COUSSINET PRINC BRONZINE PRINCIP	HAUPTLAGER COJINETE PRINCIP
3	V836840945		**2**	THRUST WASHER	RONDELLE BUTEE RONDELLA REGGISP	ANLAUFSCHEIBE ARANDELA ACELER
3	V836840982	0,10 MM	**X**	THRUST WASHER	RONDELLE BUTEE RONDELLA REGGISP	ANLAUFSCHEIBE ARANDELA ACELER
3	V836840983	0,20 MM	**X**	THRUST WASHER	RONDELLE BUTEE RONDELLA REGGISP	ANLAUFSCHEIBE ARANDELA ACELER
4	V836855525		**1**	KEY	CLAVETTE CHIAVETTA	STELLKEIL CHAVETA
5	V836855558	STANDARD	**1**	GEAR	ENGRENAGE INGRANAGGIO	ZAHNRAD ENGRANAJE
6	V837069060		**1**	GEAR	ENGRENAGE INGRANAGGIO	ZAHNRAD ENGRANAJE
7	V836340948		**6**	CONROD	BIELLE BIELLA	PLEUEL BIELA
7	V836864101	2230-2249g E	**X**	CONROD	BIELLE BIELLA	PLEUEL BIELA
7	V836864102	2250-2269g F	**X**	CONROD	BIELLE BIELLA	PLEUEL BIELA
7	V836864103	2270-2289g G	**X**	CONROD	BIELLE BIELLA	PLEUEL BIELA
7	V836864104	2290-2309g H	**X**	CONROD	BIELLE BIELLA	PLEUEL BIELA
7	V836864105	2310-2329g I	**X**	CONROD	BIELLE BIELLA	PLEUEL BIELA
7	V836864106	2330-2349g J	**X**	CONROD	BIELLE BIELLA	PLEUEL BIELA
7	V836864107	2350-2369g K	**X**	CONROD	BIELLE BIELLA	PLEUEL BIELA
8	V836864288	7	**6**	BUSH	BAGUE BOCCOLA	RING CASQUILLO
8	V836338606	∅ + 0,5 MM	**X**	BUSH	BAGUE BOCCOLA	RING CASQUILLO
9	V836864141	7	**12**	SCREW	VIS VITE	SCHRAUBE TORNILLO
10	V836336302		**6**	BEARING	COUSSINET CUSCINETTO	LAGER COJINETE
10	V836338650	∅ 72,731 MM 72,750 MM	**X**	BEARING	COUSSINET CUSCINETTO	LAGER COJINETE
10	V836338651	∅ 72,481 MM 72,500 MM	**X**	BEARING	COUSSINET CUSCINETTO	LAGER COJINETE

Crankshaft, Piston & Connecting Rods
Vilebrequin, Piston & Bielles
Kurbelwelle, Kolben & Pleuel
Albero Motore, Stantuffo & Bielli
Ciguenal, Piston & Bielas

10-35

1-WH02-013-A

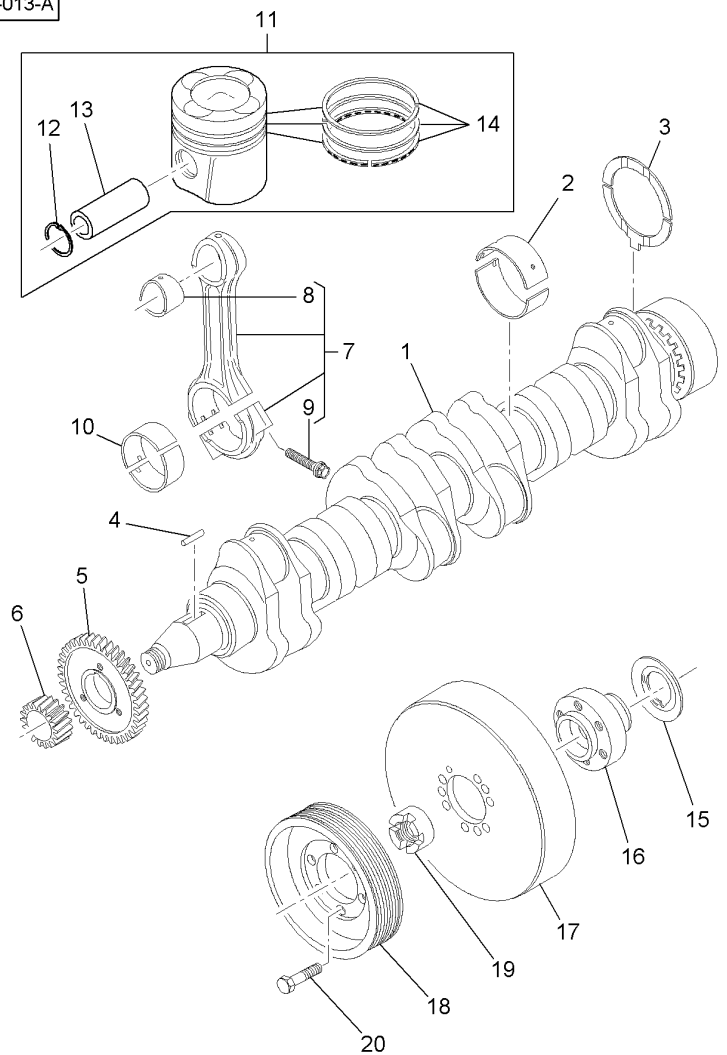

10	V836338652	∅ 71,981 MM 72,000 MM	X	BEARING	COUSSINET CUSCINETTO	LAGER COJINETE
10	V836338653	∅ 71,481 MM 71,500 MM	X	BEARING	COUSSINET CUSCINETTO	LAGER COJINETE
11	V837070185	STANDARD	6	PISTON	PISTON PISTONE	KOLBEN PISTON
12		11 REF. 11	12	CIRCLIP	CIRCLIP ANNELLO ELASTICO	SEEGERING GRAPA CIRCULAR
13		11 REF. 11	6	CLEVIS PIN	AXE PERNO D'ATTACCO	SPLINTBOLZEN BULON CILINDRICO
14	V836840887	11	6	KIT, PISTON RING	JEU SEGM PISTON KIT FASCIE ELAST	KOLBENRINGSATZ AROS.PIST.JUEGO
15	V836855637		1	RING	ANNEAU ANELLO	RING. ANILLO
16	V836855641		1	HUB	MOYEU MOZZO	NABE CUBO
17	V836840882	M12 X 40	1	SHOCK ABSORBER	AMORTISSEUR CHOC AMMORTIZZATORE	STOSSDAEMPFER AMORTIGUADOR
18	V836855690		1	PULLEY	POULIE PULEGGIA	RIEMENSCHEIBE POLEA
19	V836322221		1	NUT	ECROU DADO	MUTTER TUERCA
20	V528902230	M12 X 40	6	SCREW	VIS VITE	SCHRAUBE TORNILLO

Valve Mechanism And Camshaft
Soupapes Et Arbre A Cames
Ventil-Anordnung Und Nockenwelle
Valvole E Albero A Camme
Mecanismo Valv. Y Arbol De Levas

10-40

1-WH22-004-A

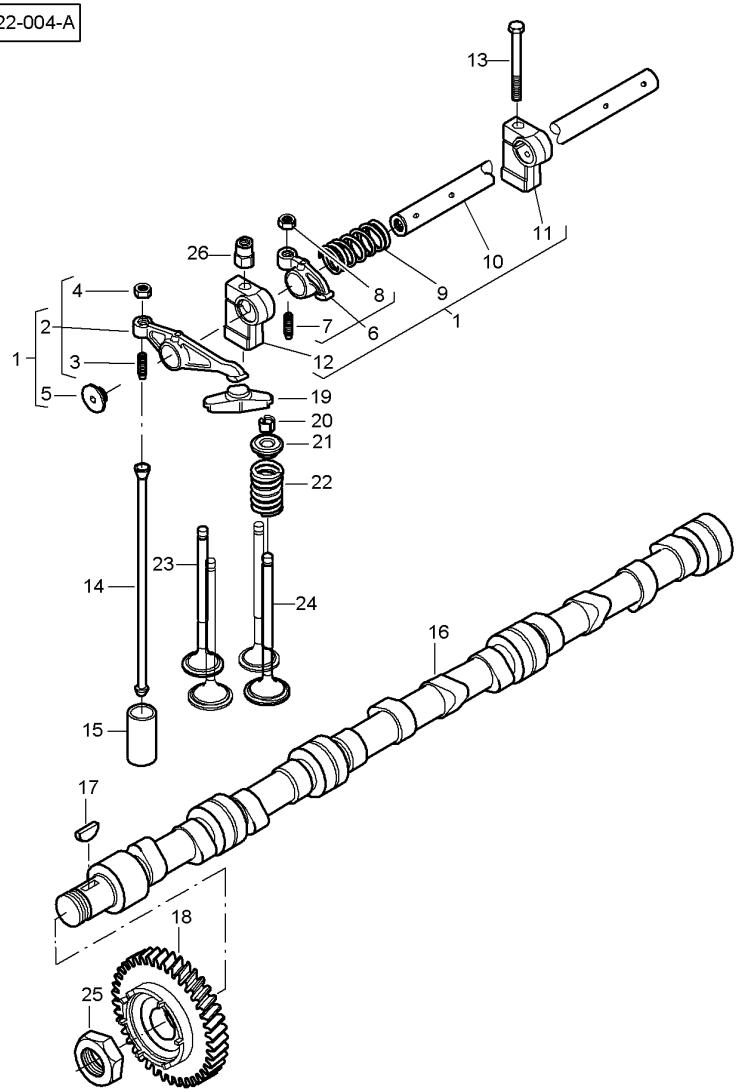

1	V837069016			**1**	ROCKER SHAFT	AXE DE CULBUTEUR ASSE BALANCIERI	KIPPHEBELASCHE EJE BALANCINES
2*	V837069011	1 [A]		**6**	ROCKER	CULBUTEUR BILANCIERE	KIPPHEBEL BALANCIN
3	V837069023	2		**6**	ADJUSTING SCREW	VIS REGLAGE VITE DI REGOLAZ.	EINSTELLSCHRAUBE TORNILLO AJUSTA
4	V512861000	2		**6**	NUT	ECROU DADO	MUTTER TUERCA
5	V837069020	1		**4**	PLUG	BOUCHON TAPPO	STOPFEN TAPON
6	V837069013	1 [B]		**6**	ROCKER	CULBUTEUR BILANCIERE	KIPPHEBEL BALANCIN
7	V837069023	6		**6**	ADJUSTING SCREW	VIS REGLAGE VITE DI REGOLAZ.	EINSTELLSCHRAUBE TORNILLO AJUSTA
8	V512861000	6		**6**	NUT	ECROU DADO	MUTTER TUERCA
9	V837069019	1		**4**	SPRING	RESSORT MOLLA	FEDER MUELLE
10	V837069015	1		**2**	ROCKER SHAFT	AXE DE CULBUTEUR ASSE BALANCIERI	KIPPHEBELASCHE EJE BALANCINES
11	V837069018	1		**2**	BRACKET	SUPPORT FIXATION STAFFETTA	HALTEARM SOPORTE
12	V837069017	1		**4**	BRACKET	SUPPORT FIXATION STAFFETTA	HALTEARM SOPORTE
13	V529801920	M10 X 85		**2**	SCREW	VIS VITE	SCHRAUBE TORNILLO
14	V837069014			**12**	PUSHROD	TIGE POUSSEE ASTA COMMANDO	STOESSELSTANGE. VAR. CONTRAPUNTA
15	V836014264			**12**	TAPPET	POUSSOIR SOUPAPE PUNTERIA	VENTILSTOESSEL EMPUJADOR VALVU.
16	V837070148			**1**	CAMSHAFT	ARBRE A CAMES ALBERO A COMMA	NOCKENWELLE ARBOL DE LEVAS
17	V603305760			**1**	KEY	CLAVETTE CHIAVETTA	STELLKEIL CHAVETA
18*	V837070036			**1**	GEAR	ENGRENAGE INGRANAGGIO	ZAHNRAD ENGRANAJE
19*	V837069006			**12**	GUIDE	GUIDE GUIDA	FUEHRUNG GUIA
20	V837064910			**48**	COTTER	BICONE CONOS	SPLINT PASADOR ABIERTO
21	V837069004			**24**	SPRING SEAT	CUVETTE DE RESST MOLLEGGIO SEDILE	FEDERTELLER ASIENTO RESORTES
22	V837069005			**24**	SPRING	RESSORT MOLLA	FEDER MUELLE
23	V837069002			**12**	EXHAUST VALVE	SOUPAPE ECHAPP VALVOLA SCARICO	AUSLASSVENTIL VALVULA ESCAPE
24	V837069003			**12**	INLET VALVE	SOUPAPE ADMISS VALVOLA IMMISSI.	EINLASSVENTIL VALVULA ADMISION
25	V837069085			**1**	NUT	ECROU DADO	MUTTER TUERCA
26	V836655406			**4**	NUT	ECROU DADO	MUTTER TUERCA

Valve Mechanism And Camshaft
Soupapes Et Arbre A Cames
Ventil-Anordnung Und Nockenwelle
Valvole E Albero A Camme
Mecanismo Valv. Y Arbol De Levas

10-40

1-WH22-004-A

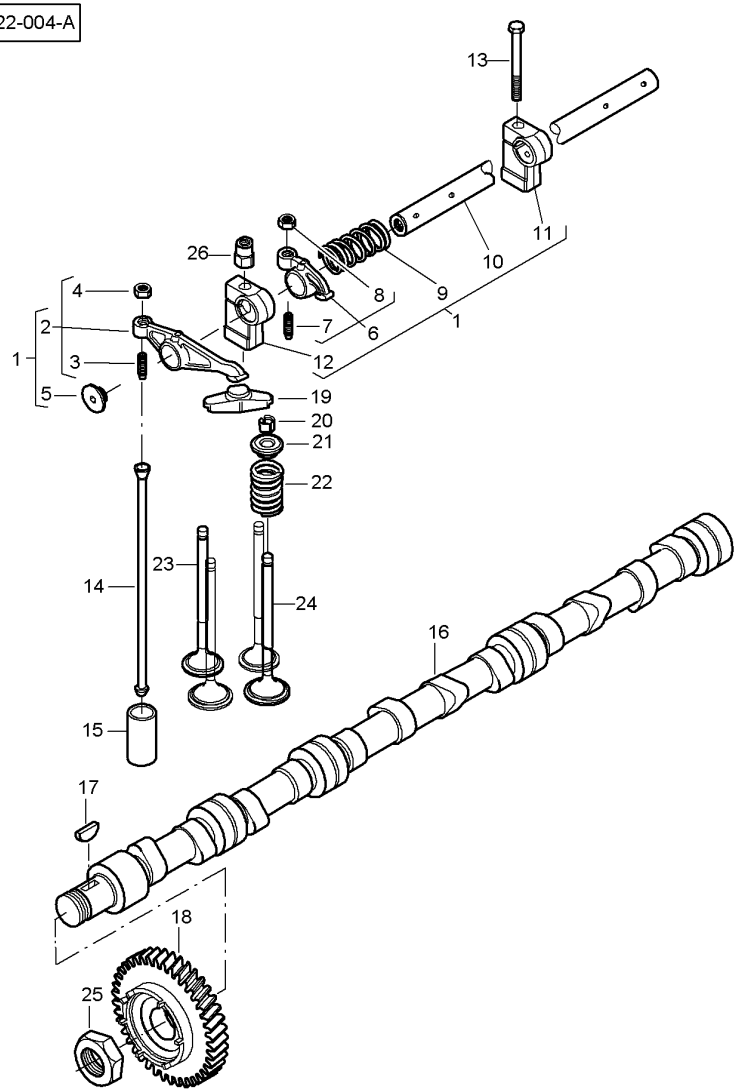

[A] FOR VALVE INLET
POUR SOUPAPE ADMISSION
FUER EINLASSVENTIL
PER VALVOLA IMMISSI.
POR VALVULA ADMISION

[B] FOR VALVE EXHAUST
POUR SOUPAPE ECHAPPEMENT
FUER AUSLASSVENTIL
PER VALVOLA SCARICO
POR VALVULA ESCAPE

Cylinder Head
Culasse
Zylinderkopf
Testata
Culata

10-45

1-WH03-012-A

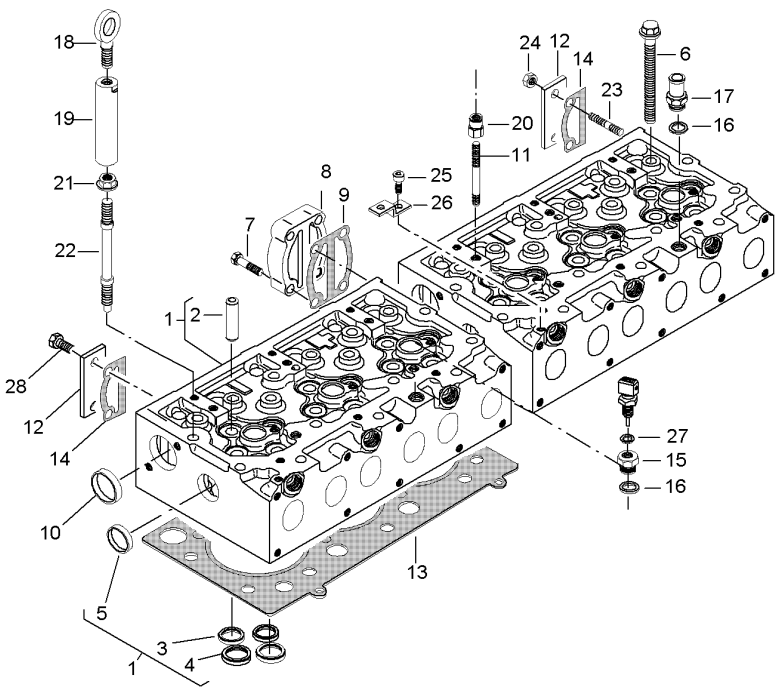

1	V837069001		S19673	**1**	CYLINDER HEAD	CULASSE TESTATA	ZYLINDERKOPF CULATA CILINDRO
1*			S19674 10-105 No 9	**1**	CYLINDER HEAD	CULASSE TESTATA	ZYLINDERKOPF CULATA CILINDRO
2	V837064906	1		**24**	VALVE GUIDE	GUIDE DE SOUPAPE VALVE GUIDE	VENTILFUEHRUNG VALVE GUIDE
3	V837064907	1 [B]		**12**	VALVE SEAT	SIEGE SOUPAPE SEDE VALVOLA	VENTILSITZ ASIENTO VALVULA
3	V837070187	[B] ∅ + 0.20 MM		**X**	RING	ANNEAU ANELLO	RING. ANILLO
4	V837064908	1 [A]		**12**	VALVE SEAT	SIEGE SOUPAPE SEDE VALVOLA	VENTILSITZ ASIENTO VALVULA
4	V837070188	[A] ∅ + 0.20 MM		**X**	RING	ANNEAU ANELLO	RING. ANILLO
5	V836647942	1		**4**	PLUG	BOUCHON TAPPO	STOPFEN TAPON
6	V837069025			**27**	SCREW	VIS VITE	SCHRAUBE TORNILLO
7	V528801830	M10 X 40		**4**	SCREW	VIS VITE	SCHRAUBE TORNILLO
8	V836855348			**1**	CONNECTOR	BORNE. MORSETTO.	DOPPELNIPPEL CONECTOR
9*	V836867752			**1**	GASKET	JOINT GIUNTO PIANO	FLACHDICHTUNG JUNTA PLANA
10	V640016045			**2**	PLUG	BOUCHON TAPPO	STOPFEN TAPON
11	V546801900	M10 X 75		**4**	STUD	GOUJON SPINOTTO FILETT.	STEHBOLZEN ESPARRAGO ROSCA.
12	V836855350			**2**	PLATE	PLAQUE PIASTRA	PLATTE PLATO
13	V837070290			**2**	HEAD GASKET	JOINT CULASSE GUARNIZIONETESTA	ZYL.KOPFDICHTUNG JUNTA DE CULATA
14*	V836867753			**2**	GASKET	JOINT GIUNTO PIANO	FLACHDICHTUNG JUNTA PLANA
15	V836119643			**1**	PLUG	BOUCHON TAPPO	STOPFEN TAPON
16	V615881822			**2**	SEAL	JOINT ETANCHEITE GIUNTO ROTONDO	DICHTRING JUNTA REDONDA
17	V640325018			**1**	PLUG	BOUCHON TAPPO	STOPFEN TAPON
18	V836640752			**1**	SHACKLE	MANILLE ANELLO TRAZIONE	SCHAEKEL TRABA
19	V836867567	M12/M16		**2**	NUT	ECROU DADO	MUTTER TUERCA
20	V836655406			**4**	NUT	ECROU DADO	MUTTER TUERCA
21	V836859110			**11**	NUT	ECROU DADO	MUTTER TUERCA
22	V836859109			**7**	STUD	GOUJON SPINOTTO FILETT.	STEHBOLZEN ESPARRAGO ROSCA.
23	V836659785			**2**	STUD	GOUJON SPINOTTO FILETT.	STEHBOLZEN ESPARRAGO ROSCA.

Cylinder Head
Culasse
Zylinderkopf
Testata
Culata

10-45

1-WH03-012-A

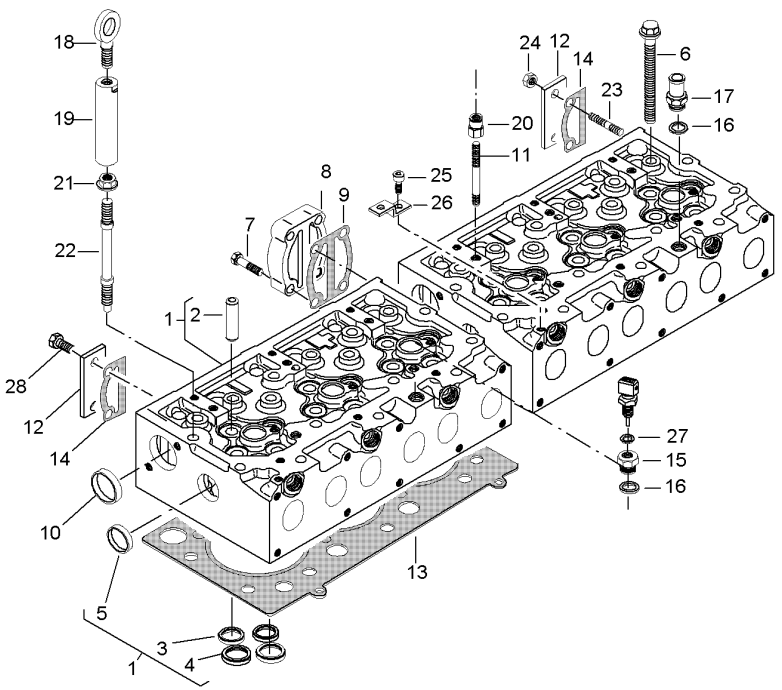

24	V504601000	M10	**2**	NUT	ECROU DADO	MUTTER TUERCA
25	V581804582	M8 X 16	**5**	SCREW	VIS VITE	SCHRAUBE TORNILLO
26	V836747849		**2**	BRACKET	SUPPORT FIXATION STAFFETTA	HALTEARM SOPORTE
27	V615881420		**1**	GASKET	JOINT GIUNTO PIANO	FLACHDICHTUNG JUNTA PLANA
28	V528801800	M10 X 25	**2**	SCREW	VIS VITE	SCHRAUBE TORNILLO

[A] FOR VALVE INLET
POUR SOUPAPE ADMISSION
FUER EINLASSVENTIL
PER VALVOLA IMMISSI.
POR VALVULA ADMISION

[B] FOR VALVE EXHAUST
POUR SOUPAPE ECHAPPEMENT
FUER AUSLASSVENTIL
PER VALVOLA SCARICO
POR VALVULA ESCAPE

Cylinder Head Cover
Cache Culbuteurs
Zylinderkopfdeckel
Coperchio Testata
Tapa Culata

10-50

1-WH23-006-B

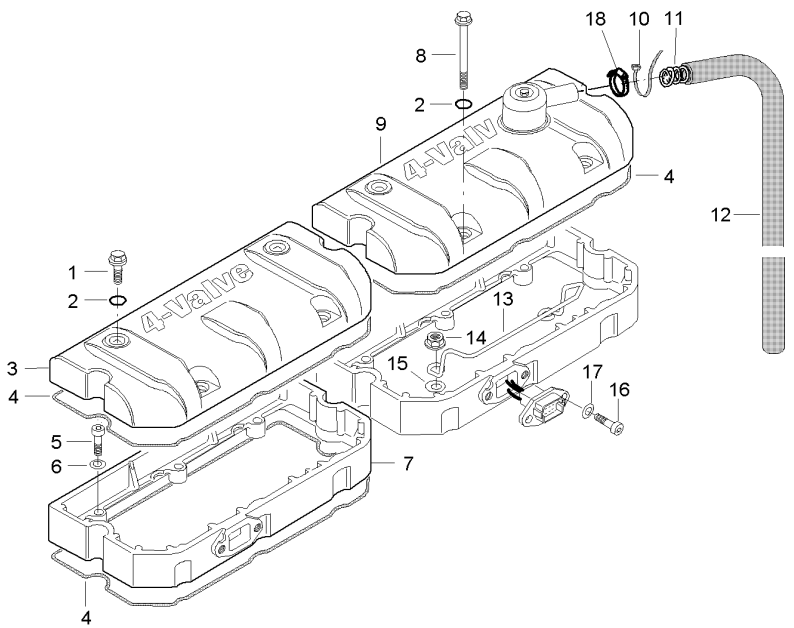

1	V540801780	M10 X 20	**4**	SCREW	VIS VITE	SCHRAUBE TORNILLO
2	V614901030		**8**	O RING	JOINT TORIQUE GIUNTO DI TENUTA	O-RING JUNTA TOROIDAL
3	V837069022		**1**	COVER	COUVERCLE COPERCHIO	ABDECKUNG. CUBIERTA
4*	**V837067881**		**4**	GASKET	JOINT GIUNTO PIANO	FLACHDICHTUNG JUNTA PLANA
5	V581804630	M8 X 30	**6**	SCREW	VIS VITE	SCHRAUBE TORNILLO
6	V500950800		**6**	WASHER	RONDELLE RONDELLA	SCHEIBE ARANDELA
7	V837069021		**2**	FRAME	BATI TELAIO	RAHMEN BASTIDOR
8	V540801910	M10 X 80	**4**	SCREW	VIS VITE	SCHRAUBE TORNILLO
9	V837069029		**1**	COVER	COUVERCLE COPERCHIO	ABDECKUNG. CUBIERTA
10*	V835329746	➡| S19673	**1**	CABLE TIE	ATTACHE CABLE FASCETTA CAVI	KABELBINDER APRIETACABLES
11	V837070343		**1**	SPRING	RESSORT MOLLA	FEDER MUELLE
12	V837070346	◀▶ 1150 MM	**1**	PIPE	TUYAU TUBO	TUBE TUBO
13	V837069026		**1**	BRACKET	SUPPORT FIXATION STAFFETTA	HALTEARM SOPORTE
14	V836859110		**4**	NUT	ECROU DADO	MUTTER TUERCA
15	V500951200		**4**	WASHER	RONDELLE RONDELLA	SCHEIBE ARANDELA
16*	V581804582	➡| S19673 M8 X 16	**4**	SCREW	VIS VITE	SCHRAUBE TORNILLO
16*	V581804602	➡ S19674 M8 X 20	**4**	SCREW	VIS VITE	SCHRAUBE TORNILLO
17*	V500150842	➡ S19674	**4**	WASHER	RONDELLE RONDELLA	SCHEIBE ARANDELA
18*	V602078532	➡ S19674	**1**	HOSE CLIP	COLLIER DURITE COLLARE DI TUBO	SCHLAUCHBINDER ABRAZADERA TUBO

Oil Sump
Carter D'Huile
Olgehause
Carter D'Olio
Carter De Aceite

10-55

1-WH11-009-A

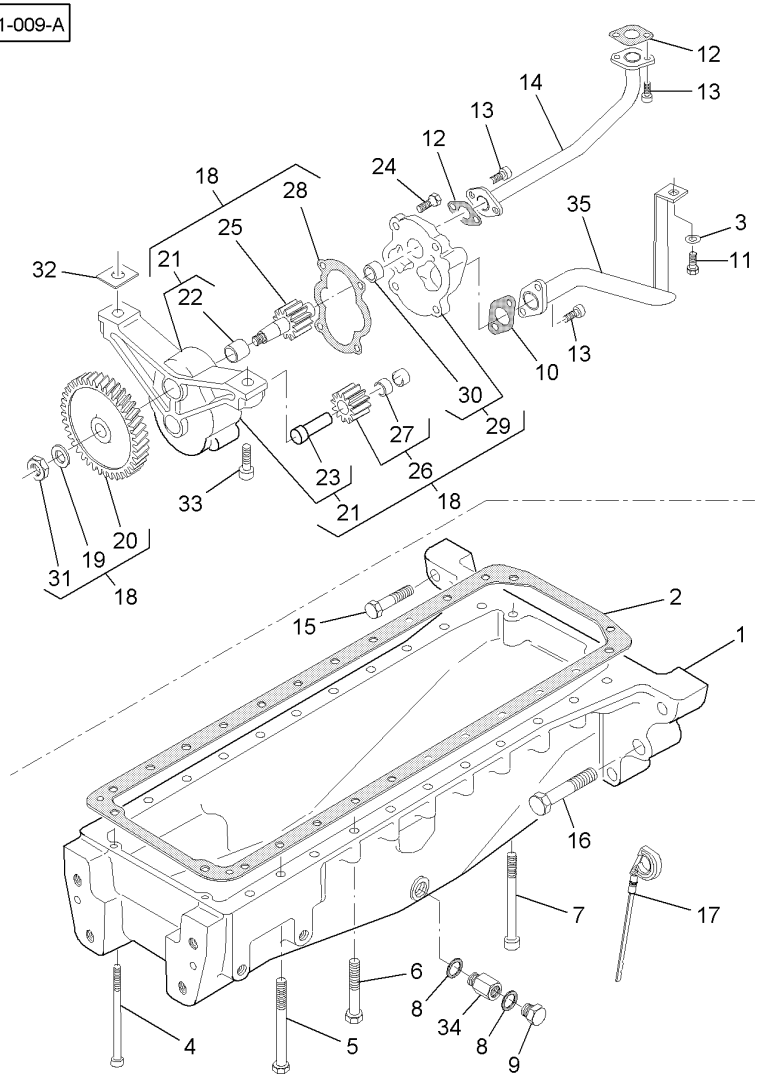

1	V836867688		**1**	OIL SUMP	CARTER D HUILE SOTTOCOPPA	OELWANNE CARTER
2	V836322183		**1**	GASKET	JOINT GIUNTO PIANO	FLACHDICHTUNG JUNTA PLANA
3	V500150840		**1**	WASHER	RONDELLE RONDELLA	SCHEIBE ARANDELA
4	V581704840	M8 X 170	**2**	SCREW	VIS VITE	SCHRAUBE TORNILLO
5	V529701950	M10 X 100	**6**	SCREW	VIS VITE	SCHRAUBE TORNILLO
6	V529701880	M10 X 65	**16**	SCREW	VIS VITE	SCHRAUBE TORNILLO
7	V581705200	M10 X 130	**2**	SCREW	VIS VITE	SCHRAUBE TORNILLO
8	**V615881827**		**2**	SEAL	JOINT ETANCHEITE GIUNTO ROTONDO	DICHTRING JUNTA REDONDA
9	**V836655493**	M18	**1**	PLUG	BOUCHON TAPPO	STOPFEN TAPON
10	V836338201		**1**	GASKET	JOINT GIUNTO PIANO	FLACHDICHTUNG JUNTA PLANA
11	V528801360	M8 X 16	**2**	SCREW	VIS VITE	SCHRAUBE TORNILLO
12	V836008449		**2**	GASKET	JOINT GIUNTO PIANO	FLACHDICHTUNG JUNTA PLANA
13	V581804600	M8 X 20	**1**	SCREW	VIS VITE	SCHRAUBE TORNILLO
14	V836855673		**1**	PIPE	TUYAU TUBO	TUBE TUBO
15	V529903090	M16 X 70	**6**	SCREW	VIS VITE	SCHRAUBE TORNILLO
16	V529904330	M22 X 90	**2**	SCREW	VIS VITE	SCHRAUBE TORNILLO
17*	V836867841	[A]	**1**	DIPSTICK	JAUGE ASTA LIVELLO	MESSTAB VARILLA ACEITE
18	V836855300		**1**	OIL PUMP	POMPE A HUILE POMPA PER OLIO	OELPUMPE BOMBA DE ACEITE
19	V836122910	18	**1**	WASHER	RONDELLE RONDELLA	SCHEIBE ARANDELA
20	V836338667	18	**1**	GEAR	ENGRENAGE INGRANAGGIO	ZAHNRAD ENGRANAJE
21	V836338186	18 M10	**1**	FRAME	BATI TELAIO	RAHMEN BASTIDOR
22	V836322909	21	**1**	BUSH	BAGUE BOCCOLA	RING CASQUILLO
23	V836322906	22	**1**	SHAFT	ARBRE ALBERO	WELLE ARBOL
24	V528801380	18	**4**	SCREW	VIS VITE	SCHRAUBE TORNILLO
25	V836338182	18	**1**	GEAR	ENGRENAGE INGRANAGGIO	ZAHNRAD ENGRANAJE
26	V836338180	18	**1**	GEAR	ENGRENAGE INGRANAGGIO	ZAHNRAD ENGRANAJE

Oil Sump
Carter D'Huile
Olgehause
Carter D'Olio
Carter De Aceite

10-55

1-WH11-009-A

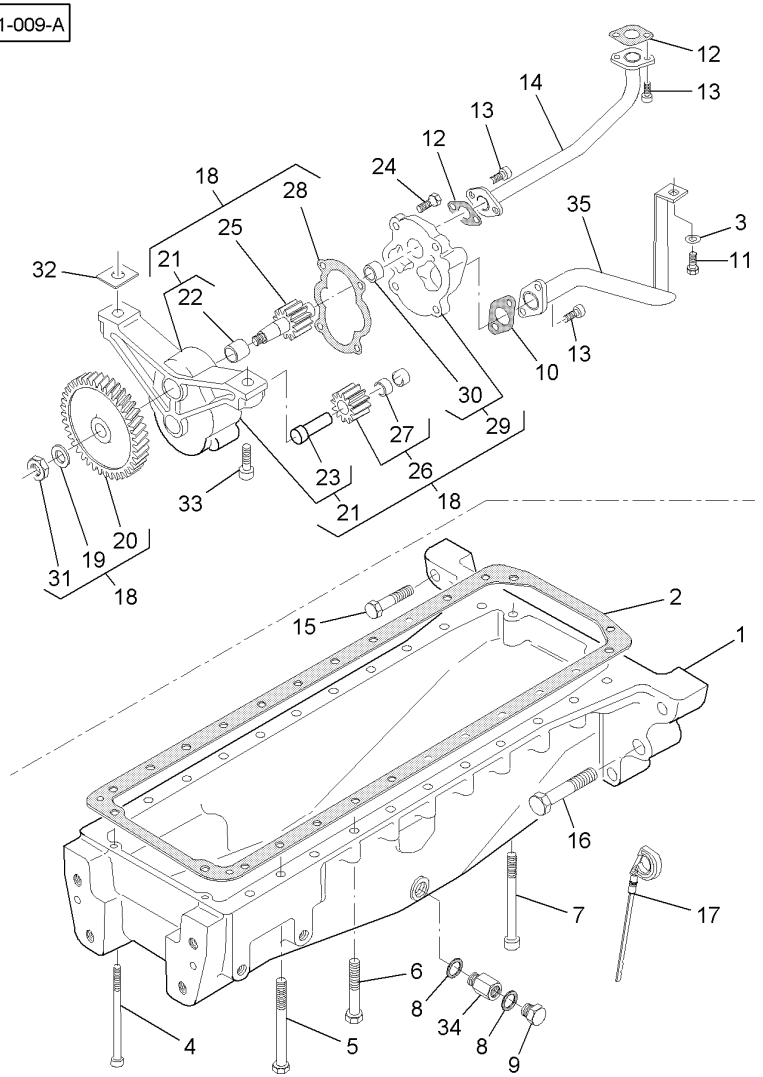

27	V836322909	26	**2**	BUSH	BAGUE BOCCOLA	RING CASQUILLO
28	V836338188	18	**1**	GASKET	JOINT GIUNTO PIANO	FLACHDICHTUNG JUNTA PLANA
29	V836855297	18	**1**	COVER	COUVERCLE COPERCHIO	ABDECKUNG. CUBIERTA
30	V836322909	29	**1**	BUSH	BAGUE BOCCOLA	RING CASQUILLO
31	V504861000	18 M10	**1**	NUT	ECROU DADO	MUTTER TUERCA
32	V836007871		**X**	SHIM	CALE REGLAGE SPESSORE	AUSGLEICHSCHEIBE CALCE
33	V581805050	M10 X 40	**2**	SCREW	VIS VITE	SCHRAUBE TORNILLO
34	V836328071		**1**	UNION	RACCORD RACCORDO	VERSCHRAUBUNG RACOR
35	V836867727		**1**	PIPE	TUYAU TUBO	TUBE TUBO

[A] YELLOW
JAUNE
GELB
GIALLO
AMARILLO

Lubricating Oil Cooler And Filter
Refroidisseur D'Huile Et Filtre
Oelkuehler Und Filter
Raffreddamento Olio E Filtro
Refrigerador Y Filtro De Aceite

10-60

1-WH26-003-B

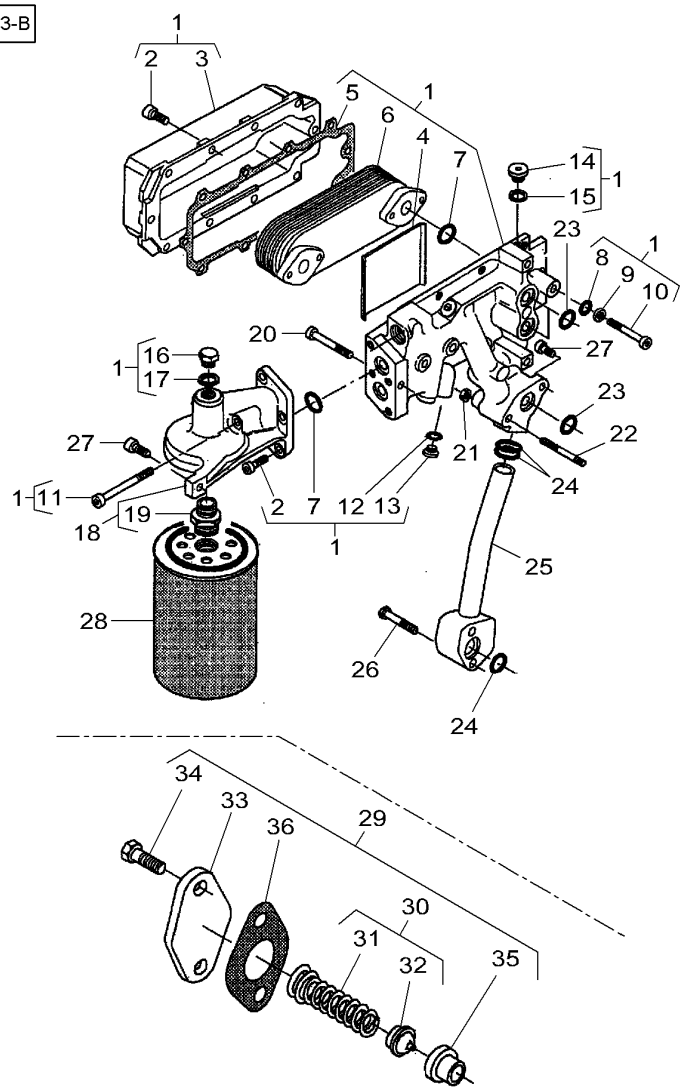

1	V836859182		**1**	OIL COOLER	REFROIDISS HUILE RADIATORE OLIO	OELKUEHLER REFRIG DE ACEIT
2	V581804620	1 M8 X 25	**13**	SCREW	VIS VITE	SCHRAUBE TORNILLO
3	V836855519	1	**1**	HOUSING	CARTER CARCASSA	GEHAEUSE ALOJAMIENTO
4	V836855521	1	**1**	GUIDE	GUIDE GUIDA	FUEHRUNG GUIA
5	V836855520	1	**1**	GASKET	JOINT GIUNTO PIANO	FLACHDICHTUNG JUNTA PLANA
6	**V836855484**	1	**1**	ELEMENT	ELEMENT ELEMENTO	ELEMENT ELEMENTO
7	V614602030	1	**4**	O RING	JOINT TORIQUE GIUNTO DI TENUTA	O-RING JUNTA TOROIDAL
8	V614600724	1	**4**	O RING	JOINT TORIQUE GIUNTO DI TENUTA	O-RING JUNTA TOROIDAL
9	V836855517	1	**4**	WASHER	RONDELLE RONDELLA	SCHEIBE ARANDELA
10	V581804690	1 M8 X 60	**4**	SCREW	VIS VITE	SCHRAUBE TORNILLO
11	V581804730	1 M8 X 80	**1**	SCREW	VIS VITE	SCHRAUBE TORNILLO
12	V615881216	1	**1**	GASKET	JOINT GIUNTO PIANO	FLACHDICHTUNG JUNTA PLANA
13	V640305012	1	**1**	PLUG	BOUCHON TAPPO	STOPFEN TAPON
14	V640325018	1	**3**	PLUG	BOUCHON TAPPO	STOPFEN TAPON
15	V615881822	1	**3**	SEAL	JOINT ETANCHEITE GIUNTO ROTONDO	DICHTRING JUNTA REDONDA
16	V836119079	1	**1**	PLUG	BOUCHON TAPPO	STOPFEN TAPON
17	V615881620	1	**1**	SEAL	JOINT ETANCHEITE GIUNTO ROTONDO	DICHTRING JUNTA REDONDA
18	V836859187	1	**1**	FILTER HEAD	TETE DE FILTRE TESTA FILTRO	FILTERKOPF CABEZA DE FILTRO
19	V836859105	18	**1**	NIPPLE	GRAISSEUR COUDE NIPPLO	NIPPEL NIPLE
20	V581804690	M8 X 60	**2**	SCREW	VIS VITE	SCHRAUBE TORNILLO
21	V504800800	M8	**2**	NUT	ECROU DADO	MUTTER TUERCA
22	V546801490	M8 X 70	**2**	BOLT	BOULON BULLONE	BOLZEN BULON
23	V614602030		**3**	O RING	JOINT TORIQUE GIUNTO DI TENUTA	O-RING JUNTA TOROIDAL
24	V614602430		**3**	O RING	JOINT TORIQUE GIUNTO DI TENUTA	O-RING JUNTA TOROIDAL
25	V836859134		**1**	PIPE	TUYAU TUBO	TUBE TUBO
26	V529801460	M8 X 55	**2**	SCREW	VIS VITE	SCHRAUBE TORNILLO

Lubricating Oil Cooler And Filter
Refroidisseur D'Huile Et Filtre
Oelkuehler Und Filter
Raffreddamento Olio E Filtro
Refrigerador Y Filtro De Aceite

10-60

1-WH26-003-B

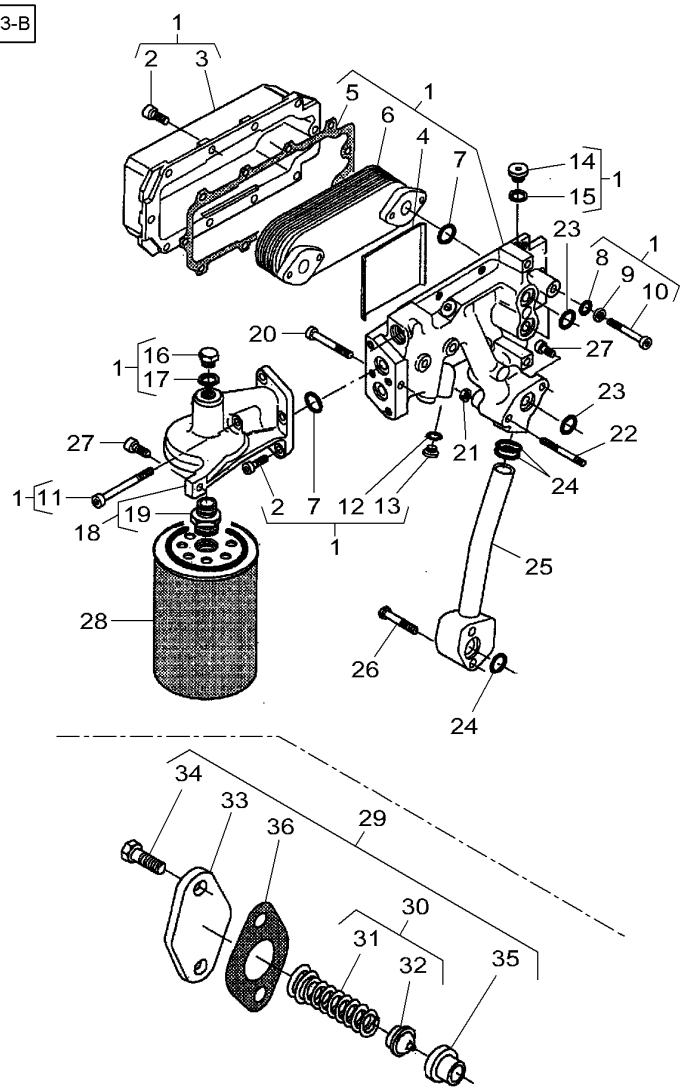

27	V581804620	M8 X 25	**2**	SCREW	VIS VITE	SCHRAUBE TORNILLO
28	**V836867234**		**1**	OIL FILTER	FILTRE HUILE FILTRO OLIO	OELFILTER FILTRO DE ACEITE
29	V836662130		**1**	CONTROL VALVE	SOUPAPE COMMANDE VALVOLA COMANDO	STEUERVENTIL VALVULA CONTROL
30	V836667650	29	**1**	KIT, VALVE	JEU SOUPAPES KIT VALVOLA	VENTILSATZ KIT VALVULAS
31		30 REF. 30	**1**	SPRING	RESSORT MOLLA	FEDER MUELLE
32		30 REF. 30	**1**	PLATE	PLAQUE PIASTRA	PLATTE PLATO
33	V836659524	29	**1**	COVER	COUVERCLE COPERCHIO	ABDECKUNG. CUBIERTA
34	V528801380	29 M8 X 20	**2**	SCREW	VIS VITE	SCHRAUBE TORNILLO
35	V836659521	29	**1**	VALVE SEAT	SIEGE SOUPAPE SEDE VALVOLA	VENTILSITZ ASIENTO VALVULA
36	V836322190	29	**1**	GASKET	JOINT GIUNTO PIANO	FLACHDICHTUNG JUNTA PLANA

Water Pump
Pompe A Eau
Wasserpumpe
Pompa Ad Acqua
Bomba De Agua

10-65

1-WH28-009-A

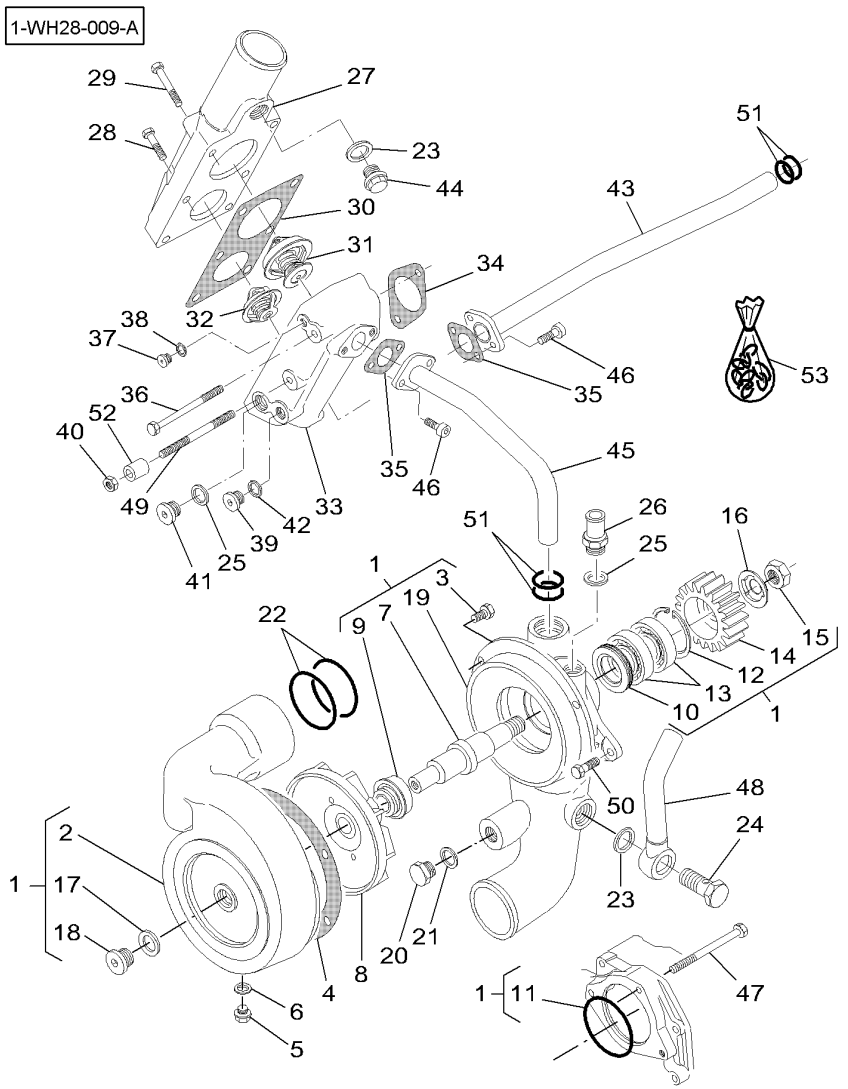

1	V837070076		**1**	WATER PUMP	POMPE A EAU POMPA ACQUA	WASSERPUMPE BOMBA DE AGUA
2	V837069077	1	**1**	HOUSING	CARTER CARCASSA	GEHAEUSE ALOJAMIENTO
3	V528801362	1 M8 X 16	**4**	SCREW	VIS VITE	SCHRAUBE TORNILLO
4	V836855625	1 [A]	**1**	GASKET	JOINT GIUNTO PIANO	FLACHDICHTUNG JUNTA PLANA
5	V640305012	1	**1**	PLUG	BOUCHON TAPPO	STOPFEN TAPON
6	V615881216	1 [A]	**1**	GASKET	JOINT GIUNTO PIANO	FLACHDICHTUNG JUNTA PLANA
7	V837069078	1 [A]	**1**	SHAFT	ARBRE ALBERO	WELLE ARBOL
8	V836866735	1 [A]	**1**	IMPELLER	PROPULSEUR GIRANTE	FLUEGELRAD TURBINA IMPULS.
9	V836859452	1 [A]	**1**	GASKET	JOINT GIUNTO PIANO	FLACHDICHTUNG JUNTA PLANA
10	V614703042	1 [A]	**1**	OIL SEAL	BAGUE ETANCHEITE BOCCOLA PARAOLIO	OELDICHTRING BUJE RETENACEITE
11	V614607930	1 [A]	**1**	O RING	JOINT TORIQUE GIUNTO DI TENUTA	O-RING JUNTA TOROIDAL
12	V617330047	1 [A]	**1**	CIRCLIP	CIRCLIP ANNELLO ELASTICO	SEEGERING GRAPA CIRCULAR
13	V610072040	1 [A]	**2**	BEARING	COUSSINET CUSCINETTO	LAGER COJINETE
14	V837070074	1	**1**	GEAR	ENGRENAGE INGRANAGGIO	ZAHNRAD ENGRANAJE
15	V504601600	1 [A]	**1**	NUT	ECROU DADO	MUTTER TUERCA
16	V837070184	1	**1**	RING	ANNEAU ANELLO	RING. ANILLO
17	V615881822	1	**1**	SEAL	JOINT ETANCHEITE GIUNTO ROTONDO	DICHTRING JUNTA REDONDA
18	V640325018	1	**1**	PLUG	BOUCHON TAPPO	STOPFEN TAPON
19	V837070018	1	**1**	FRAME	BATI TELAIO	RAHMEN BASTIDOR
20	V836119079		**1**	PLUG	BOUCHON TAPPO	STOPFEN TAPON
21	V615881620	[A]	**1**	SEAL	JOINT ETANCHEITE GIUNTO ROTONDO	DICHTRING JUNTA REDONDA
22	V614604958	[A]	**2**	O RING	JOINT TORIQUE GIUNTO DI TENUTA	O-RING JUNTA TOROIDAL
23	**V615882227**		**3**	GASKET	JOINT GIUNTO PIANO	FLACHDICHTUNG JUNTA PLANA
24	V640435018		**1**	BANJO BOLT	VIS BANJO BULLONE BANJO	HOHLSCHRAUBE TORNILLO HUECO
25	V615881822		**2**	SEAL	JOINT ETANCHEITE GIUNTO ROTONDO	DICHTRING JUNTA REDONDA
26	V836119837		**1**	UNION	RACCORD RACCORDO	VERSCHRAUBUNG RACOR

Water Pump
Pompe A Eau
Wasserpumpe
Pompa Ad Acqua
Bomba De Agua

10-65

1-WH28-009-A

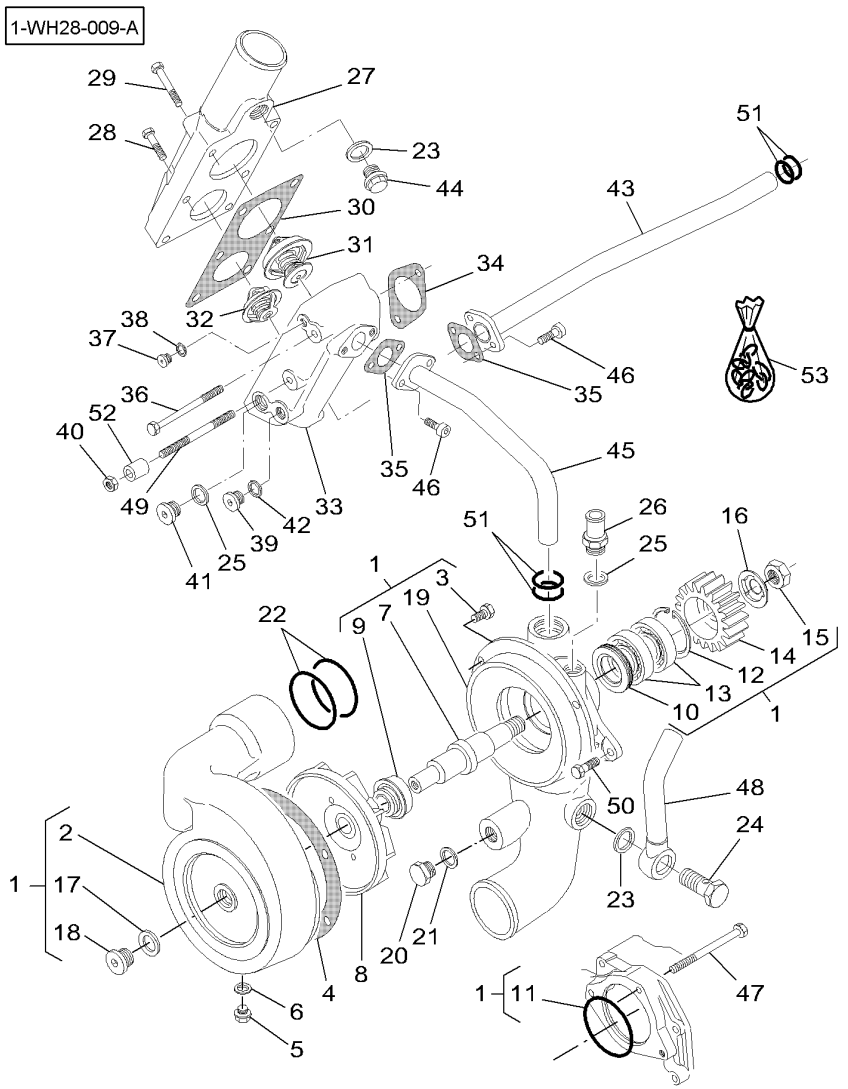

27	V836855777		**1**	PIPE	TUYAU TUBO	TUBE TUBO
28	V529801430	M8 X 40	**4**	SCREW	VIS VITE	SCHRAUBE TORNILLO
29	V529801470	M8 X 60	**2**	SCREW	VIS VITE	SCHRAUBE TORNILLO
30	V836855603		**1**	GASKET	JOINT GIUNTO PIANO	FLACHDICHTUNG JUNTA PLANA
31	**V836331590**	83° C	**1**	THERMOSTAT	THERMOSTAT TERMOSTATO	THERMOSTAT TERMOSTATO
32	**V836015156**	79° C	**1**	THERMOSTAT	THERMOSTAT TERMOSTATO	THERMOSTAT TERMOSTATO
33	V836855601		**1**	HOUSING	CARTER CARCASSA	GEHAEUSE ALOJAMIENTO
34	V836646393		**1**	GASKET	JOINT GIUNTO PIANO	FLACHDICHTUNG JUNTA PLANA
35	V836322190		**2**	GASKET	JOINT GIUNTO PIANO	FLACHDICHTUNG JUNTA PLANA
36	V529801550	M8 X 100	**2**	SCREW	VIS VITE	SCHRAUBE TORNILLO
37	V640325110		**1**	PLUG	BOUCHON TAPPO	STOPFEN TAPON
38	V615871014		**1**	O RING	JOINT TORIQUE GIUNTO DI TENUTA	O-RING JUNTA TOROIDAL
39	V640325014		**1**	PLUG	BOUCHON TAPPO	STOPFEN TAPON
40	V504800800	M8	**1**	NUT	ECROU DADO	MUTTER TUERCA
41	V640325018		**1**	PLUG	BOUCHON TAPPO	STOPFEN TAPON
42	V615881418		**1**	SEAL	JOINT ETANCHEITE GIUNTO ROTONDO	DICHTRING JUNTA REDONDA
43	V836855639		**1**	PIPE	TUYAU TUBO	TUBE TUBO
44	V640045022	M8 X 20	**1**	PLUG	BOUCHON TAPPO	STOPFEN TAPON
45	V837070020		**1**	PIPE	TUYAU TUBO	TUBE TUBO
46	VHC9326	M8 X 20	**1**	SCREW	VIS VITE	SCHRAUBE TORNILLO
47	V529801520	M8 X 85	**3**	SCREW	VIS VITE	SCHRAUBE TORNILLO
48	V836867873		**1**	PIPE	TUYAU TUBO	TUBE TUBO
49	V546801580	M8 x 130	**1**	STUD	GOUJON SPINOTTO FILETT.	STEHBOLZEN ESPARRAGO ROSCA.
50	V528801380	M8 X 20	**1**	SCREW	VIS VITE	SCHRAUBE TORNILLO
51	V614602430		**4**	O RING	JOINT TORIQUE GIUNTO DI TENUTA	O-RING JUNTA TOROIDAL
52	V835336842		**1**	SLEEVE	MANCHON MANICOTTO	HUELSE MANGUITO

Water Pump
Pompe A Eau
Wasserpumpe
Pompa Ad Acqua
Bomba De Agua

10-65

1-WH28-009-A

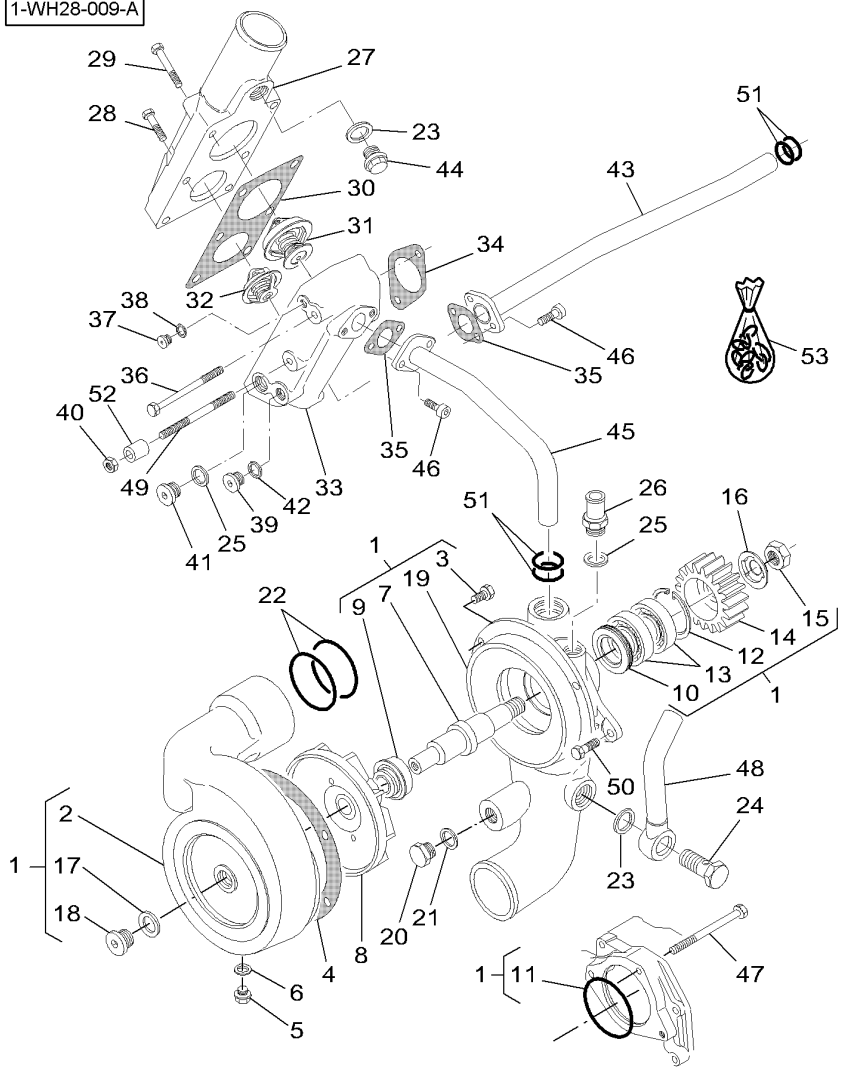

53	V837062617	**1**	KIT, REPAIR	JEU REPARATION KIT RIPARAZIONE REPARATURSATZ JUEGO REPARACION

[A] INCLUDED IN REPAIR KIT V837062617
COMPRIS DANS JEU DE REPARATION V837062617
ENTHALTEN REPARATUR SATZ V837062617
ICLUSO NEL GRUPPO RIPARAZIONE V837062617
SE INCLUYE EN EL NECESER DE REPARACION V837062617

Injection System
Systeme D'Injection
Einspritzsystem
Sistema D'Iniezione
Sistema De Inyeccion

10-70

1-WH09-018-A

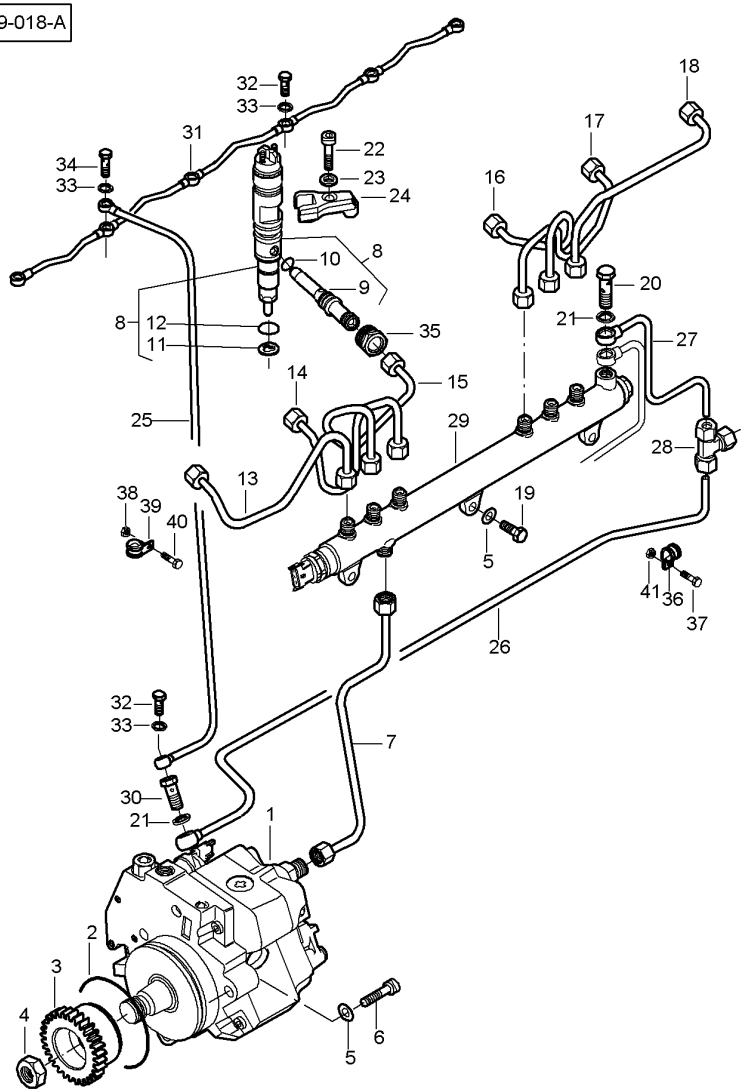

1	V837069146		**1**	INJECTION PUMP	POMPE INJECTION POMPA INIEZIONE	EINSPRITZPUMPE BOMBA INYECCION
2	V837069147		**1**	O RING	JOINT TORIQUE GIUNTO DI TENUTA	O-RING JUNTA TOROIDAL
3	V837070073		**1**	GEAR	ENGRENAGE INGRANAGGIO	ZAHNRAD ENGRANAJE
4	V504611802	M18	**1**	NUT	ECROU DADO	MUTTER TUERCA
5	V500950800		**4**	WASHER	RONDELLE RONDELLA	SCHEIBE ARANDELA
6	V581704650	M8 X 40	**3**	SCREW	VIS VITE	SCHRAUBE TORNILLO
7	V837070249		**1**	PIPE	TUYAU TUBO	TUBE TUBO
8	V837062629		**6**	INJECTOR	ATOMISEUR INIETTORE COMPLT	EINSPRITZDUESE INYECTOR
9		8 ▰ REF. 8	**1**	TUBE	TUBE TUBO.	ROHR TUBO.
10	V837069314	8	**1**	RING	ANNEAU ANELLO	RING. ANILLO
11	V837069032	8	**1**	SEAL	JOINT ETANCHEITE GIUNTO ROTONDO	DICHTRING JUNTA REDONDA
12	V837069313	8	**1**	SEAL	JOINT ETANCHEITE GIUNTO ROTONDO	DICHTRING JUNTA REDONDA
13	V837070077	CYL. No 1	**1**	FUEL LINE	TUYAU CARBURANT TUBO CARBURANTE	KRAFTST.LEITUNG TUBO COMBUSTIBLE
14	V837070078	CYL. No 2	**1**	FUEL LINE	TUYAU CARBURANT TUBO CARBURANTE	KRAFTST.LEITUNG TUBO COMBUSTIBLE
15	V837070079	CYL. No 3	**1**	FUEL LINE	TUYAU CARBURANT TUBO CARBURANTE	KRAFTST.LEITUNG TUBO COMBUSTIBLE
16	V837070080	CYL. No 4	**1**	FUEL LINE	TUYAU CARBURANT TUBO CARBURANTE	KRAFTST.LEITUNG TUBO COMBUSTIBLE
17	V837070081	CYL. No 5	**1**	FUEL LINE	TUYAU CARBURANT TUBO CARBURANTE	KRAFTST.LEITUNG TUBO COMBUSTIBLE
18	V837070082	CYL. No 6	**1**	FUEL LINE	TUYAU CARBURANT TUBO CARBURANTE	KRAFTST.LEITUNG TUBO COMBUSTIBLE
19	V528801380	M8 X 20	**3**	SCREW	VIS VITE	SCHRAUBE TORNILLO
20	V640425008		**1**	SCREW	VIS VITE	SCHRAUBE TORNILLO
21	V615881216		**5**	GASKET	JOINT GIUNTO PIANO	FLACHDICHTUNG JUNTA PLANA
22	V581704660	M8 X 45	**6**	SCREW	VIS VITE	SCHRAUBE TORNILLO
23	V837070121		**6**	WASHER	RONDELLE RONDELLA	SCHEIBE ARANDELA
24	V837069007		**6**	FASTENER	AGRAFE AGRAFE	KLAMMER GRAPA
25	V837070277		**1**	FUEL PIPE	TUYAU ALIMENTAT. TUBO ALIMENTAZI.	KRAFTSTOFFROHR TUBO ALIMENTACI.
26	V837070258		**1**	FUEL PIPE	TUYAU ALIMENTAT. TUBO ALIMENTAZI.	KRAFTSTOFFROHR TUBO ALIMENTACI.

Injection System
Systeme D'Injection
Einspritzsystem
Sistema D'Iniezione
Sistema De Inyeccion

10-70

1-WH09-018-A

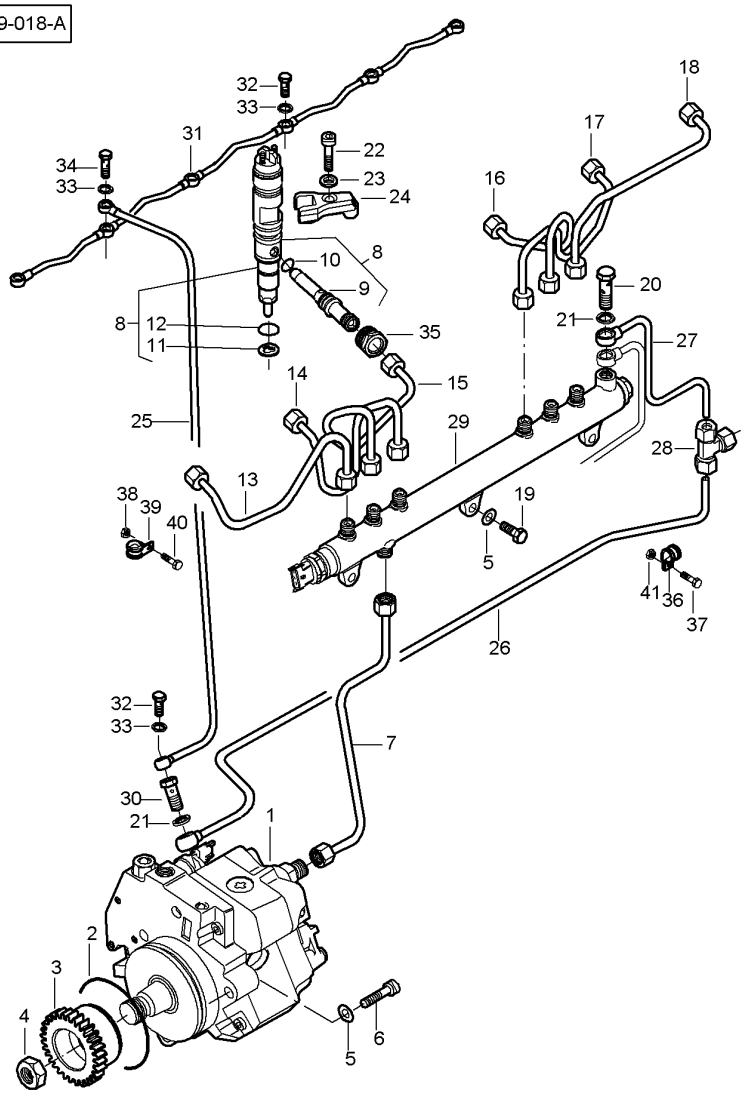

27	V837070255		**1**	FUEL PIPE	TUYAU ALIMENTAT. TUBO ALIMENTAZI.	KRAFTSTOFFROHR TUBO ALIMENTACI.
28	V641436008		**1**	UNION	RACCORD RACCORDO	VERSCHRAUBUNG RACOR
29	V837069050		**1**	FUEL LINE	TUYAU CARBURANT TUBO CARBURANTE	KRAFTST.LEITUNG TUBO COMBUSTIBLE
30	V837070314		**1**	SCREW	VIS VITE	SCHRAUBE TORNILLO
31	V837069027		**1**	PIPE	TUYAU TUBO	TUBE TUBO
32	V640435005		**6**	SCREW	VIS VITE	SCHRAUBE TORNILLO
33	V615870812		**14**	GASKET	JOINT GIUNTO PIANO	FLACHDICHTUNG JUNTA PLANA
34	V640425005		**1**	SCREW	VIS VITE	SCHRAUBE TORNILLO
35	V837069268		**6**	NUT	ECROU DADO	MUTTER TUERCA
36	V602074608		**3**	CLAMP	COLLIER FASCETTA	HALTESCHELLE ABRAZADERA
37	V528801082	M6 X 20	**3**	SCREW	VIS VITE	SCHRAUBE TORNILLO
38*	V510600502	M5	**1**	NUT	ECROU DADO	MUTTER TUERCA
39	V602070605		**1**	BAND	BANDE NASTRO	BAND BANDA
40	V528800782	M5 X 20	**1**	SCREW	VIS VITE	SCHRAUBE TORNILLO
41	V510600602	M6	**3**	NUT	ECROU DADO	MUTTER TUERCA

Low Pressure Fuel System
Circuit Carburant Basse Pression
Kraftstoff-Niederdruckanlage
Sistema Nafta A Bassa Pressione
Sistema De Combustible A Baja Presion

10-75

1-WH14-015-B

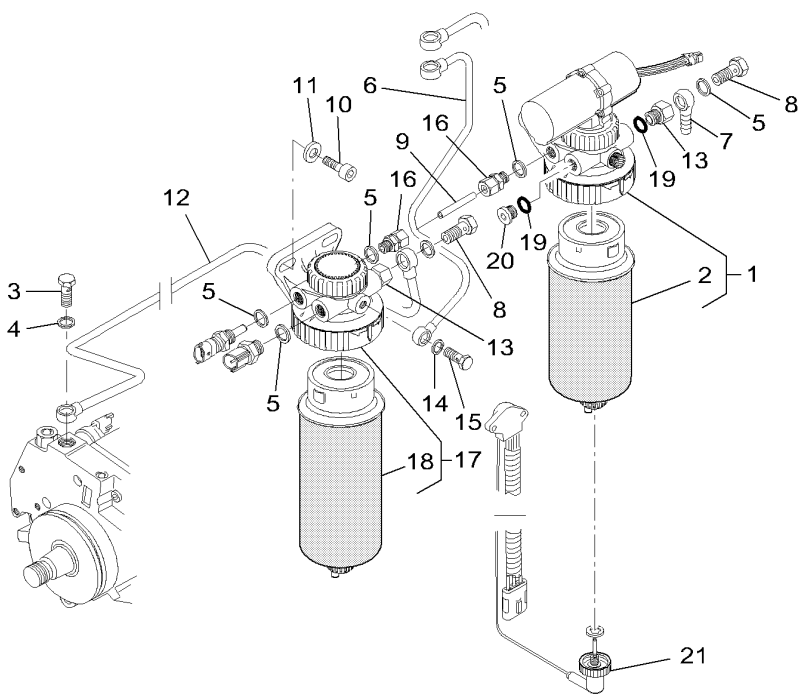

1	* V836867832		**1**	PRE FILTER	PRE FILTRE PREFILTRO	VORFILTER PRE FILTRO
2	**V836867233**	1	**1**	FUEL ELEMENT	ELEMENTCARBURANT ELEM.CARBURANTE	FILTEREINSATZ. ELEMENTO GASOLEO
3	V640435008		**1**	SCREW	VIS VITE	SCHRAUBE TORNILLO
4	V615881216		**2**	GASKET	JOINT GIUNTO PIANO	FLACHDICHTUNG JUNTA PLANA
5	V615881420		**10**	GASKET	JOINT GIUNTO PIANO	FLACHDICHTUNG JUNTA PLANA
6	V837070253		**1**	FUEL PIPE	TUYAU ALIMENTAT. TUBO ALIMENTAZI.	KRAFTSTOFFROHR TUBO ALIMENTACI.
7	V640255210		**1**	PIPE	TUYAU TUBO	TUBE TUBO
8	V640435010		**2**	SCREW	VIS VITE	SCHRAUBE TORNILLO
9	V837070223		**1**	FUEL LINE	TUYAU CARBURANT TUBO CARBURANTE	KRAFTST.LEITUNG TUBO COMBUSTIBLE
10	V581705030	M10 X 30	**4**	SCREW	VIS VITE	SCHRAUBE TORNILLO
11	V836122910	➡ S19673	**4**	WASHER	RONDELLE RONDELLA	SCHEIBE ARANDELA
11	* V500151050	➡ S19674	**4**	WASHER	RONDELLE RONDELLA	SCHEIBE ARANDELA
12	V837070252		**1**	FUEL PIPE	TUYAU ALIMENTAT. TUBO ALIMENTAZI.	KRAFTSTOFFROHR TUBO ALIMENTACI.
13	V836336934		**2**	UNION	RACCORD RACCORDO	VERSCHRAUBUNG RACOR
14	V615871014		**2**	O RING	JOINT TORIQUE GIUNTO DI TENUTA	O-RING JUNTA TOROIDAL
15	V640435006		**1**	SCREW	VIS VITE	SCHRAUBE TORNILLO
16	V641086010		**2**	UNION	RACCORD RACCORDO	VERSCHRAUBUNG RACOR
17	* V836867830		**1**	FUEL FILTER	FILTRE CARBURANT FILTRO CARBURAN.	KRAFTSTOFFILTER FILTRO COMBUSTI.
18	**V836867231**	17	**1**	FUEL ELEMENT	ELEMENTCARBURANT ELEM.CARBURANTE	FILTEREINSATZ. ELEMENTO GASOLEO
19	V614601125		**2**	O RING	JOINT TORIQUE GIUNTO DI TENUTA	O-RING JUNTA TOROIDAL
20	V640325014		**2**	PLUG	BOUCHON TAPPO	STOPFEN TAPON
21	* V836866576	[A]	**1**	SENSOR	DETECTEUR SENSORE	SENSOR DETECTOR

[A] WATER
EAU
WASSER
ACQUA
AGUA

Air Induction & Exhaust
Admission D'Air & Echappement
Luftansaugung & Auspuff
Sistema Di Aspirazione & Scarico
Admision & Escape

10-80

1-WH18-013-C

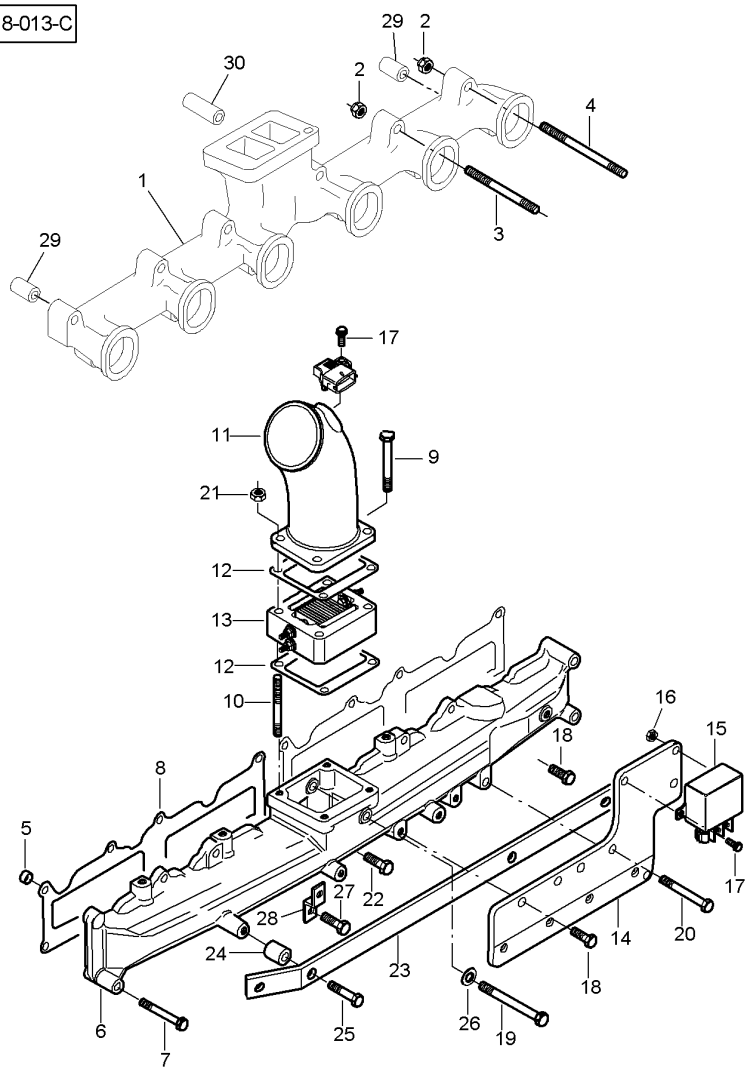

1*	V837070392	➡| S19373	**1**	EXHAUST MANIFOLD	COLLECTEUR ECHAP COLLETTORE SCARI	AUSPUFFKRUEMMER COLECTOR ESCAPE
1*	V836855506	➡ S19674		**1**	EXHAUST MANIFOLD	COLLECTEUR ECHAP COLLETTORE SCARI	AUSPUFFKRUEMMER COLECTOR ESCAPE
2*	V513601002			**12**	NUT	ECROU DADO	MUTTER TUERCA
3	V836855995	➡| S19673 M10 X 113	**5**	STUD	GOUJON SPINOTTO FILETT.	STEHBOLZEN ESPARRAGO ROSCA.
3*	V836859034	➡ S19674 M10 X 130		**5**	STUD	GOUJON SPINOTTO FILETT.	STEHBOLZEN ESPARRAGO ROSCA.
4	V836859034	➡| S19673 M10 X 130	**7**	STUD	GOUJON SPINOTTO FILETT.	STEHBOLZEN ESPARRAGO ROSCA.
4*	V836667960	➡ S19674 M10 X 150		**7**	STUD	GOUJON SPINOTTO FILETT.	STEHBOLZEN ESPARRAGO ROSCA.
5	V598355365			**1**	DOWEL	PLOT SPINA	ZYLINDERSTIFT CENTRAJE
6	V837070219			**1**	INTAKE MANIFOLD	COLLECTEUR ADMIS COLLETTORE ASP.	SAUGKRUEMMER COLECTOR ADMISIO
7	V529801470	M8 X 60		**2**	SCREW	VIS VITE	SCHRAUBE TORNILLO
8	V837069009			**2**	GASKET	JOINT GIUNTO PIANO	FLACHDICHTUNG JUNTA PLANA
9	V529801480	M8 X 65		**2**	SCREW	VIS VITE	SCHRAUBE TORNILLO
10	V546801490	➡| S19673 M8 X 70	**2**	BOLT	BOULON BULLONE	BOLZEN BULON
11	V837067825			**1**	PIPE	TUYAU TUBO	TUBE TUBO
12	V837067345			**2**	GASKET	JOINT GIUNTO PIANO	FLACHDICHTUNG JUNTA PLANA
13	V837067295	12V		**1**	HEATER	CHAUFFAGE RISCALDAMENTO	HEIZUNG CALENTADOR
14	V837070228			**1**	PLATE	PLAQUE PIASTRA	PLATTE PLATO
15	**V837069047**	12V		**1**	SOLENOID	SOLENOIDE SOLENOIDE	MAGNETSPULE SOLENOIDE
16	V510600602	M6		**2**	NUT	ECROU DADO	MUTTER TUERCA
17	V528801082	M6 X 20		**3**	SCREW	VIS VITE	SCHRAUBE TORNILLO
18	V528801400	M8 X 25		**3**	SCREW	VIS VITE	SCHRAUBE TORNILLO
19	V528901550	M8 X 100		**1**	SCREW	VIS VITE	SCHRAUBE TORNILLO
20	V529801530	M8 X 90		**3**	SCREW	VIS VITE	SCHRAUBE TORNILLO
21	V504800800	➡| S19673 M8	**2**	NUT	ECROU DADO	MUTTER TUERCA
22	V528801410	M8 X 30		**6**	ADJUSTING SCREW	VIS REGLAGE VITE DI REGOLAZ.	EINSTELLSCHRAUBE TORNILLO AJUSTA
23	V837070328			**1**	SUPPORT	SUPPORT SOPPORTO	TRAGER SOPORTE

Air Induction & Exhaust
Admission D'Air & Echappement
Luftansaugung & Auspuff
Sistema Di Aspirazione & Scarico
Admision & Escape

10-80

1-WH18-013-C

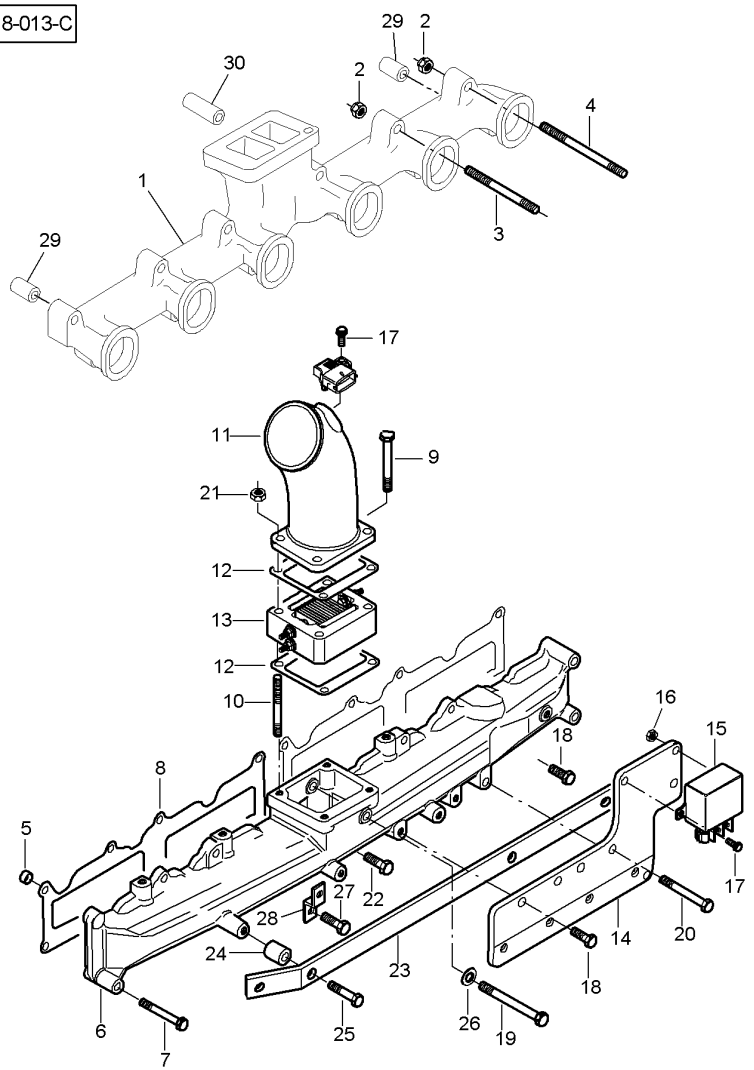

24	V836119384		**1**	SLEEVE	MANCHON MANICOTTO	HUELSE MANGUITO
25	V529801440	M8 X 45	**2**	SCREW	VIS VITE	SCHRAUBE TORNILLO
26	V836015967		**1**	WASHER	RONDELLE RONDELLA	SCHEIBE ARANDELA
27	V528801420	M8 X 35	**1**	SCREW	VIS VITE	SCHRAUBE TORNILLO
28	V836747849		**1**	BRACKET	SUPPORT FIXATION STAFFETTA	HALTEARM SOPORTE
29*	V836664013	➡| ..... ◀▶ 45 MM	**2**	SLEEVE	MANCHON MANICOTTO	HUELSE MANGUITO
30*	V836673013	➡| ..... ◀▶ 57 MM	**10**	SPACER	ENTRETOISE DISTANZIALE	ABSTANDSTUECK DISCO ESPACIADOR

Turbocharger	Pipes
Turbocompresseur	Canalisations
Turbolader	Rohre
Turbocompressore	Tubo
Turbo-Soplador	Tubos

10-85

➡| **S19673**

1-WH24-006-A

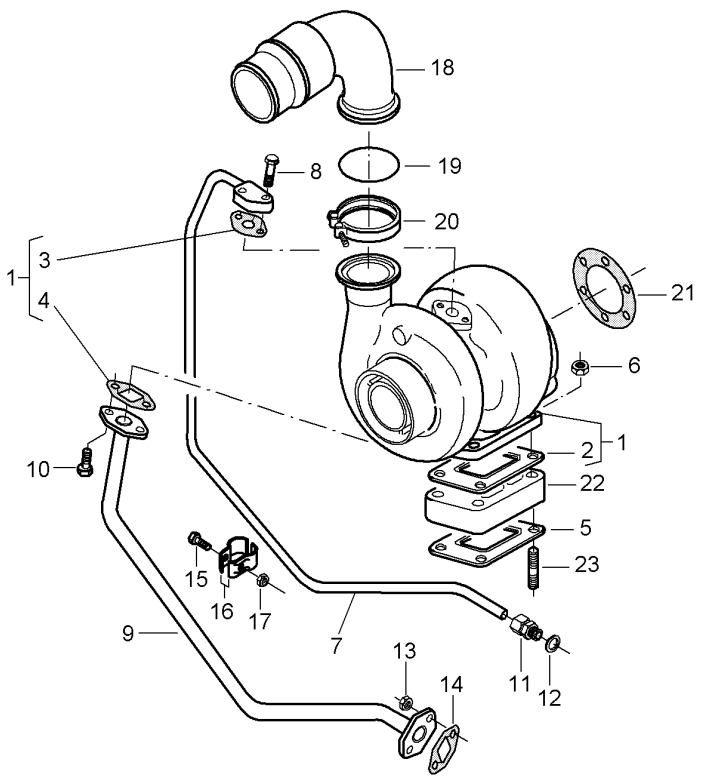

1	V836866221		**1**	TURBOCHARGER	TURBOCOMPRESSEUR TURBOCOMPRESSORE	TURBOLADER TURBOCOMPRESOR
2	V836316726	1	**1**	GASKET	JOINT GIUNTO PIANO	FLACHDICHTUNG JUNTA PLANA
3	V836866808	1	**1**	GASKET	JOINT GIUNTO PIANO	FLACHDICHTUNG JUNTA PLANA
4	V836866809	1	**1**	GASKET	JOINT GIUNTO PIANO	FLACHDICHTUNG JUNTA PLANA
5	V836316726		**1**	GASKET	JOINT GIUNTO PIANO	FLACHDICHTUNG JUNTA PLANA
6	V521601000	M10	**4**	NUT	ECROU DADO	MUTTER TUERCA
7	V836859493		**1**	TAIL PIPE	TUBE ECHAPPEMENT TUBO SCAPPAMENTO	AUSPUFFROHR TUBO DE ESCAPE
8	V528801410	M8 X 30	**2**	ADJUSTING SCREW	VIS REGLAGE VITE DI REGOLAZ.	EINSTELLSCHRAUBE TORNILLO AJUSTA
9	V836859117		**1**	TUBE	TUBE TUBO.	ROHR TUBO.
10	V528801380	M8 X 20	**2**	SCREW	VIS VITE	SCHRAUBE TORNILLO
11	V641086012		**1**	UNION	RACCORD RACCORDO	VERSCHRAUBUNG RACOR
12	V615881620		**1**	SEAL	JOINT ETANCHEITE GIUNTO ROTONDO	DICHTRING JUNTA REDONDA
13	V504800800		**2**	NUT	ECROU DADO	MUTTER TUERCA
14	V836866809		**1**	GASKET	JOINT GIUNTO PIANO	FLACHDICHTUNG JUNTA PLANA
15	V529801112	M6 X 30	**2**	SCREW	VIS VITE	SCHRAUBE TORNILLO
16	V835324324		**4**	BRACKET	SUPPORT FIXATION STAFFETTA	HALTEARM SOPORTE
17	V504600602	M6	**2**	NUT	ECROU DADO	MUTTER TUERCA
18	V836866381		**1**	PIPE	TUYAU TUBO	TUBE TUBO
19	V614606225		**1**	O RING	JOINT TORIQUE GIUNTO DI TENUTA	O-RING JUNTA TOROIDAL
20	V836866454		**1**	CLAMP	COLLIER FASCETTA	HALTESCHELLE ABRAZADERA
21	V836338985		**1**	GASKET	JOINT GIUNTO PIANO	FLACHDICHTUNG JUNTA PLANA
22	V836855630		**1**	BRIDLE	BRIDE BRIGLIA	LASCHENSPANNBAND BRIDA
23	V546701850	M10 X 50	**4**	BOLT	BOULON BULLONE	BOLZEN BULON

Turbocharger	Pipes
Turbocompresseur	Canalisations
Turbolader	Rohre
Turbocompressore	Tubo
Turbo-Soplador	Tubos

10-90

➡ **S19674**

1-WH24-008-A

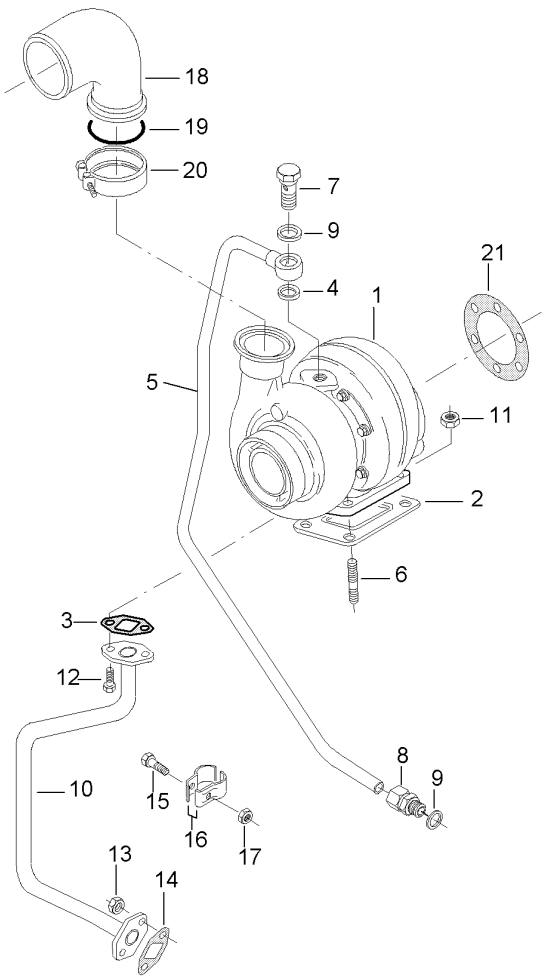

1	V836840885		**1**	TURBOCHARGER	TURBOCOMPRESSEUR TURBOCOMPRESSORE	TURBOLADER TURBOCOMPRESOR
2	**V836840992**		**1**	GASKET	JOINT GIUNTO PIANO	FLACHDICHTUNG JUNTA PLANA
3	V836866809		**1**	GASKET	JOINT GIUNTO PIANO	FLACHDICHTUNG JUNTA PLANA
4	V615881420		**1**	GASKET	JOINT GIUNTO PIANO	FLACHDICHTUNG JUNTA PLANA
5	V837067961		**1**	TAIL PIPE	TUBE ECHAPPEMENT TUBO SCAPPAMENTO	AUSPUFFROHR TUBO DE ESCAPE
6	V546701800	M10 X 25	**4**	STUD	GOUJON SPINOTTO FILETT.	STEHBOLZEN ESPARRAGO ROSCA.
7	V836855714		**1**	SCREW	VIS VITE	SCHRAUBE TORNILLO
8	V641086012		**1**	UNION	RACCORD RACCORDO	VERSCHRAUBUNG RACOR
9	V615881622		**2**	SEAL	JOINT ETANCHEITE GIUNTO ROTONDO	DICHTRING JUNTA REDONDA
10	V837067962		**1**	PIPE	TUYAU TUBO	TUBE TUBO
11	V521601000		**4**	NUT	ECROU DADO	MUTTER TUERCA
12	V528801380	M8 X 20	**2**	SCREW	VIS VITE	SCHRAUBE TORNILLO
13	V504800800	M8	**2**	NUT	ECROU DADO	MUTTER TUERCA
14	V836866809		**1**	GASKET	JOINT GIUNTO PIANO	FLACHDICHTUNG JUNTA PLANA
15	V529801112	M6 X 30	**1**	SCREW	VIS VITE	SCHRAUBE TORNILLO
16	V835324324		**1**	BRACKET	SUPPORT FIXATION STAFFETTA	HALTEARM SOPORTE
17	V504600602	M6	**1**	NUT	ECROU DADO	MUTTER TUERCA
18	V836867533		**1**	PIPE	TUYAU TUBO	TUBE TUBO
19	V614605930		**1**	O RING	JOINT TORIQUE GIUNTO DI TENUTA	O-RING JUNTA TOROIDAL
20	V836840930		**1**	CLAMP	COLLIER FASCETTA	HALTESCHELLE ABRAZADERA
21	V886325175		**1**	GASKET	JOINT GIUNTO PIANO	FLACHDICHTUNG JUNTA PLANA

Belt Tensioner
Tendeur De Courroies
Riemenspanner
Tendicinghia
Tensor De Correa

10-95

1-WH29-002-B

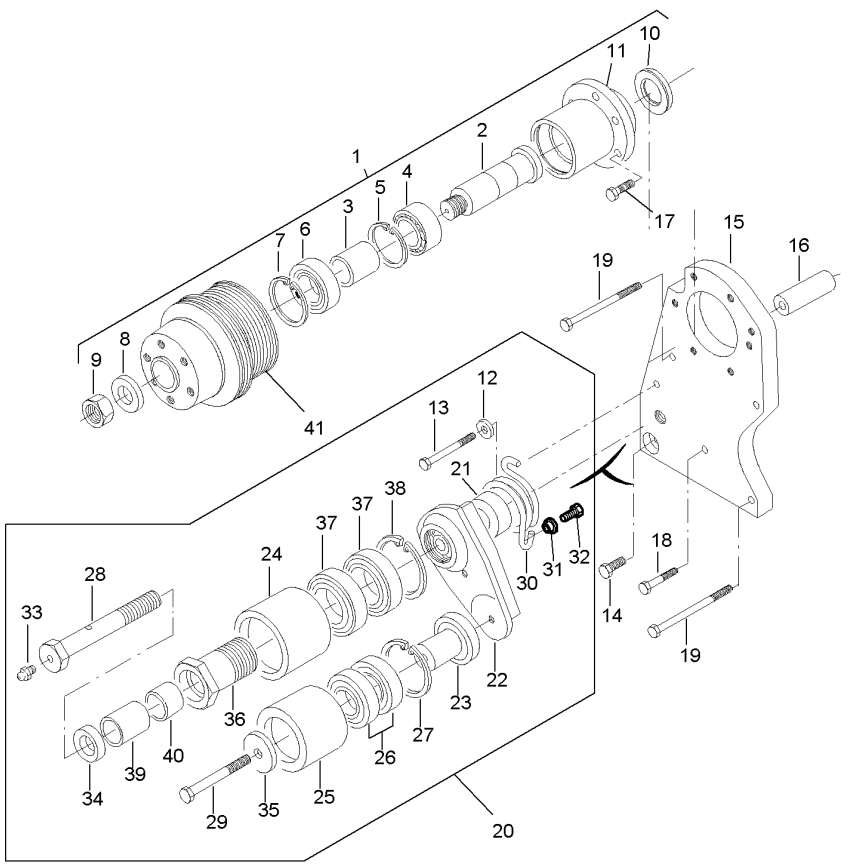

1	V836859119			**1**	KIT, SHAFT	JEU ARBRE KIT ALBERO	WELLEN-SATZ JUEGO DE ARBOL
2	V836859121	1		**1**	SHAFT	ARBRE ALBERO	WELLE ARBOL
3	V836859122	1		**1**	SLEEVE	MANCHON MANICOTTO	HUELSE MANGUITO
4	V610032060	1		**1**	BEARING ASSY	ROULEMENT CUSCINETTO COMPL	RADIALLAGER RODAMIENTO RAD
5	V617350062	1		**1**	CIRCLIP	CIRCLIP ANNELLO ELASTICO	SEEGERING GRAPA CIRCULAR
6	V610063064	1		**1**	BEARING ASSY	ROULEMENT CUSCINETTO COMPL	RADIALLAGER RODAMIENTO RAD
7	V617330072	1		**1**	CIRCLIP	CIRCLIP ANNELLO ELASTICO	SEEGERING GRAPA CIRCULAR
8	V836855756	1		**1**	WASHER	RONDELLE RONDELLA	SCHEIBE ARANDELA
9	V504602002	1		**1**	NUT	ECROU DADO	MUTTER TUERCA
10	V836529872	1		**1**	PLUG	BOUCHON TAPPO	STOPFEN TAPON
11	V836859120	1		**1**	HUB	MOYEU MOZZO	NABE CUBO
12	V836120989		➡| S19673	**1**	WASHER	RONDELLE RONDELLA	SCHEIBE ARANDELA
12*	V836667934		➡ S19674	**1**	WASHER	RONDELLE RONDELLA	SCHEIBE ARANDELA
13	V529801490	M8 X 70		**1**	SCREW	VIS VITE	SCHRAUBE TORNILLO
14	V528801800	M10 X 25		**1**	SCREW	VIS VITE	SCHRAUBE TORNILLO
15	V836859989			**1**	PLATE	PLAQUE PIASTRA	PLATTE PLATO
16	V836855934			**2**	SLEEVE	MANCHON MANICOTTO	HUELSE MANGUITO
17	V528801810	M10 X 30		**6**	SCREW	VIS VITE	SCHRAUBE TORNILLO
18	V529801470	M8 X 60		**1**	SCREW	VIS VITE	SCHRAUBE TORNILLO
19	V529801562	M8 X 110		**3**	SCREW	VIS VITE	SCHRAUBE TORNILLO
20	V836864296			**1**	TENSIONER	TENDEUR TENDITORE	SPANNER TENSOR
21	V836859348	20		**1**	SHAFT	ARBRE ALBERO	WELLE ARBOL
22	V836859347	20		**1**	SUPPORT	SUPPORT SOPPORTO	TRAGER SOPORTE
23	V836855789	20		**1**	SHAFT	ARBRE ALBERO	WELLE ARBOL
24	V836859683	20		**1**	ROLL	ROULEAU FRANGIZOLLE	WALZE RULO
25	V836855666	20		**1**	ROLL	ROULEAU FRANGIZOLLE	WALZE RULO

Belt Tensioner
Tendeur De Courroies
Riemenspanner
Tendicinghia
Tensor De Correa

10-95

1-WH29-002-B

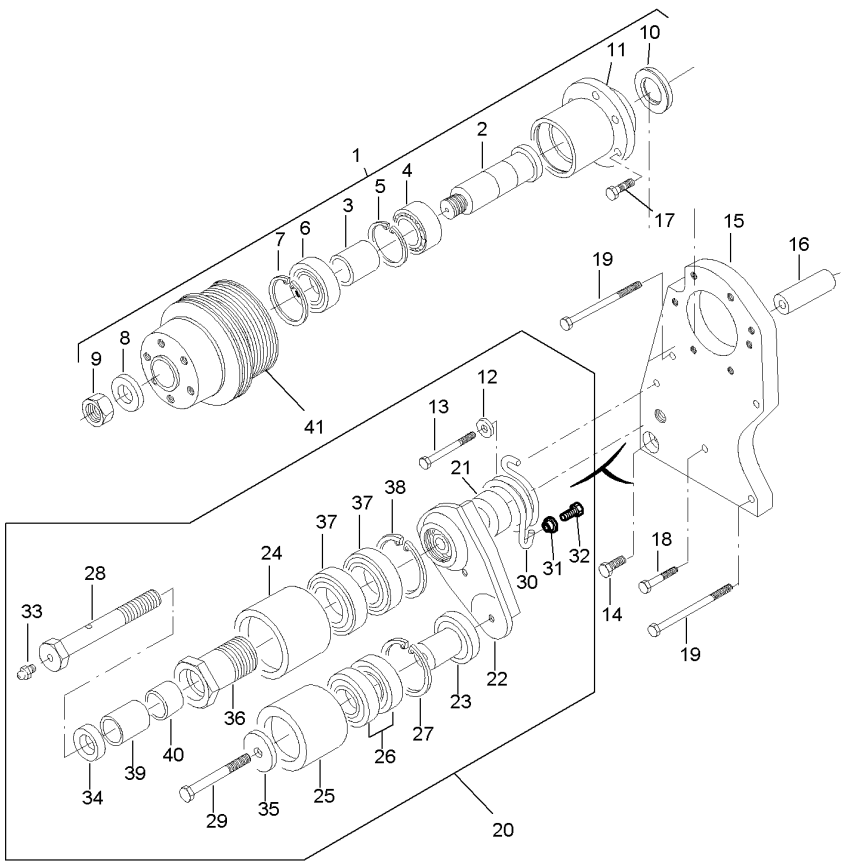

26*	339581X1	20		**2**	BEAR. 6205 2RS	RLT 6205 2RS CUSC. 6205 2RS	LAGER 6205 2RS RODA. 6205 2RS
27	V617330052	20		**1**	CIRCLIP	CIRCLIP ANNELLO ELASTICO	SEEGERING GRAPA CIRCULAR
28	V836859357	20		**1**	SCREW	VIS VITE	SCHRAUBE TORNILLO
29	V529701880	20	M10 X 65	**1**	SCREW	VIS VITE	SCHRAUBE TORNILLO
30	V836855689	20		**1**	SPRING	RESSORT MOLLA	FEDER MUELLE
31	V836120989	20 ➡	S19673	**1**	WASHER	RONDELLE RONDELLA	SCHEIBE ARANDELA
31*	V836667934	➡	S19674	**1**	WASHER	RONDELLE RONDELLA	SCHEIBE ARANDELA
32	V528801360	20	M8 X 16	**1**	SCREW	VIS VITE	SCHRAUBE TORNILLO
33	V644611006	20		**1**	GREASE FITTING	GRAISSEUR INGRASSATORE	DRUCKSCHMIERKOPF ENGRASADOR
34	V836859356	20		**1**	PLATE	PLAQUE PIASTRA	PLATTE PLATO
35	V836855941	20		**1**	PLATE	PLAQUE PIASTRA	PLATTE PLATO
36	V836859684	20		**1**	SHAFT	ARBRE ALBERO	WELLE ARBOL
37	V610060085	20		**2**	BEARING ASSY	ROULEMENT CUSCINETTO COMPL	RADIALLAGER RODAMIENTO RAD
38	V617330068	20		**1**	CIRCLIP	CIRCLIP ANNELLO ELASTICO	SEEGERING GRAPA CIRCULAR
39	V836859364	20		**1**	BUSH	BAGUE BOCCOLA	RING CASQUILLO
40	V836859363	20		**1**	BUSH	BAGUE BOCCOLA	RING CASQUILLO
41	V836867773			**1**	PULLEY	POULIE PULEGGIA	RIEMENSCHEIBE POLEA

Electronic Engine Management
Gestion Moteur Electronique
Verwaltung Motor Electronische
Gestion Motore Elettronico
Gestione Motor Electronico

10-100

1-WH40-003-B

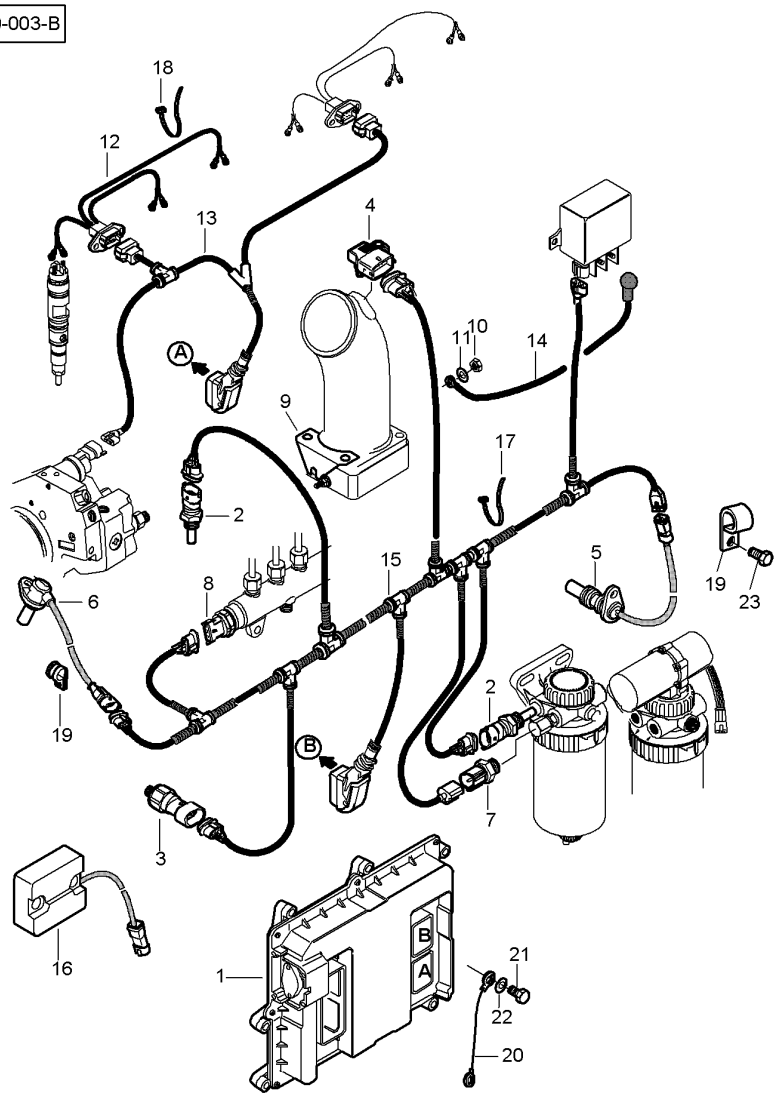

1	V837069216		**1**	CONTROL UNIT	UNITE DE CONTROL UNITA CONTROLLO	KONTROLEINHEIT UNIDAD CONTROL
2	**V836667732**		**2**	SENSOR	DETECTEUR SENSORE	SENSOR DETECTOR
3	**V837070201**		**1**	SENSOR	DETECTEUR SENSORE	SENSOR DETECTOR
4	**V836666980**		**1**	SENSOR	DETECTEUR SENSORE	SENSOR DETECTOR
5	**V837069150**		**1**	SPEED SENSOR	CAPTEUR VITESSE SENSORE VELO.	GESCHW.SENSOR ENSOR GIR.
6	**V837070189**		**1**	SPEED SENSOR	CAPTEUR VITESSE SENSORE VELO.	GESCHW.SENSOR ENSOR GIR.
7	**V837070209**		**1**	PRESSURE SWITCH	MANO CONTACT PRESSOSTATO	DRUCKSCHALTER INTERRUP PRESION
8	**V837069410**		**1**	SENSOR	DETECTEUR SENSORE	SENSOR DETECTOR
9*	V837070130	➡ S19673	**1**	EARTH STRAP	FIL DE MASSE CAVO MASSA	MASSELEITUNG CABLE TIERRA
10	V504600602	M6	**2**	NUT	ECROU DADO	MUTTER TUERCA
11	V500050642		**2**	WASHER	RONDELLE RONDELLA	SCHEIBE ARANDELA
12	V837070048		**2**	HARNESS	FAISCEAU FASCIOCAVI	KABELBAUM MAZO CABLES
13	V837070049		**2**	HARNESS	FAISCEAU FASCIOCAVI	KABELBAUM MAZO CABLES
14	V837070055		**1**	WIRE	FIL FILO	DRAHT HILO
15	V837070050		**1**	HARNESS	FAISCEAU FASCIOCAVI	KABELBAUM MAZO CABLES
16	V837070198		**1**	MODULE	MODULE MODULO	MODUL MODULO
17	V651754720		**5**	CABLE TIE	ATTACHE CABLE FASCETTA CAVI	KABELBINDER APRIETACABLES
18	V651755320		**10**	CABLE TIE	ATTACHE CABLE FASCETTA CAVI	KABELBINDER APRIETACABLES
19	V602060610		**2**	BAND	BANDE NASTRO	BAND BANDA
20	V837070292		**1**	EARTH STRAP	FIL DE MASSE CAVO MASSA	MASSELEITUNG CABLE TIERRA
21	V528801360	M8 X 16	**1**	SCREW	VIS VITE	SCHRAUBE TORNILLO
22	V500150842		**1**	WASHER	RONDELLE RONDELLA	SCHEIBE ARANDELA
23*	V528801400	M8 X 25	**1**	SCREW	VIS VITE	SCHRAUBE TORNILLO

1-WH30-003-A

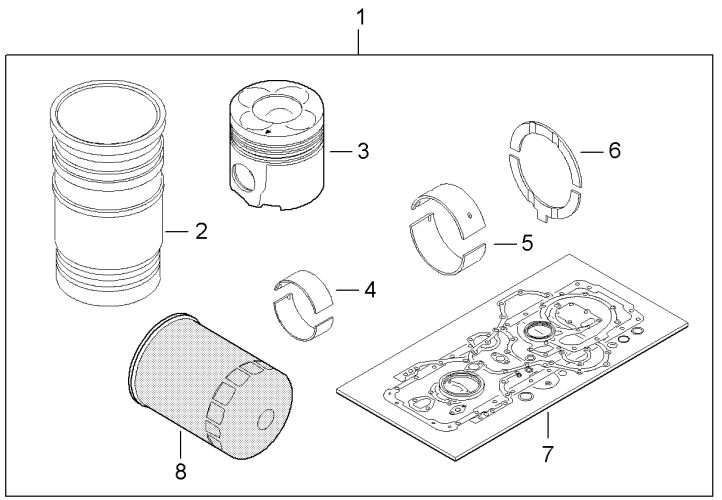

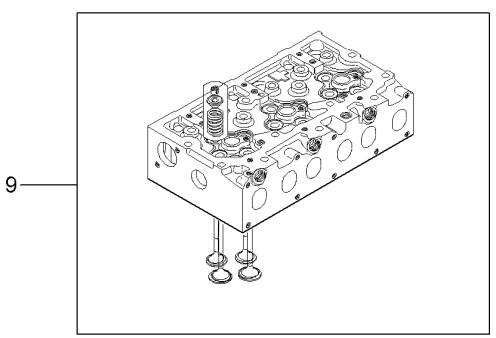

1	V837062650			**1**	KIT, REPAIR	JEU REPARATION KIT RIPARAZIONE	REPARATURSATZ JUEGO REPARACION
2	V836867048	1		**6**	LINER	CHEMISE CAMICIA	BUECHSE CAMISA
3	V837070185	1		**6**	PISTON	PISTON PISTONE	KOLBEN PISTON
4	V836336302	1		**6**	BEARING	COUSSINET CUSCINETTO	LAGER COJINETE
5*	V836840944	1		**7**	MAIN BEARING	COUSSINET PRINC BRONZINE PRINCIP	HAUPTLAGER COJINETE PRINCIP
6*	V836840945	1		**2**	THRUST WASHER	RONDELLE BUTEE RONDELLA REGGISP	ANLAUFSCHEIBE ARANDELA ACELER
7	V837062628	1		**1**	KIT, GASKET	JEU JOINTS PLATS KIT GIUNTO PIANO	FLACHDICHT. SATZ KIT JUNTA PLANA
8	**V836862582**	1		**1**	OIL FILTER	FILTRE HUILE FILTRO OLIO	OELFILTER FILTRO DE ACEITE
9*	V837062565	➡ S19673		**2**	CYLINDER HEAD	CULASSE TESTATA	ZYLINDERKOPF CULATA CILINDRO
9*	V837070400	[A] ➡ S19674		**1**	CYLINDER HEAD	CULASSE TESTATA	ZYLINDERKOPF CULATA CILINDRO
9*	V837070401	[B] ➡ S19674		**1**	CYLINDER HEAD	CULASSE TESTATA	ZYLINDERKOPF CULATA CILINDRO
9*	V837070401			**2**	CYLINDER HEAD	CULASSE TESTATA	ZYLINDERKOPF CULATA CILINDRO

[A] FRONT
AVANT
VORDERTEIL
PARTE ANTERIORE
PARTE DELANTERA

[B] REAR
ARRIERE
HINTERTEIL
PARTE POSTERIORE
PARTE TRASERA

Engine Gaskets Sets
Jeux De Joints Moteur
Motor - Dichtungssaetze
Serie Guarnizioni Motore
Jeugos De Empaquetaduras De Motor

10-110

1-WH15-008-A

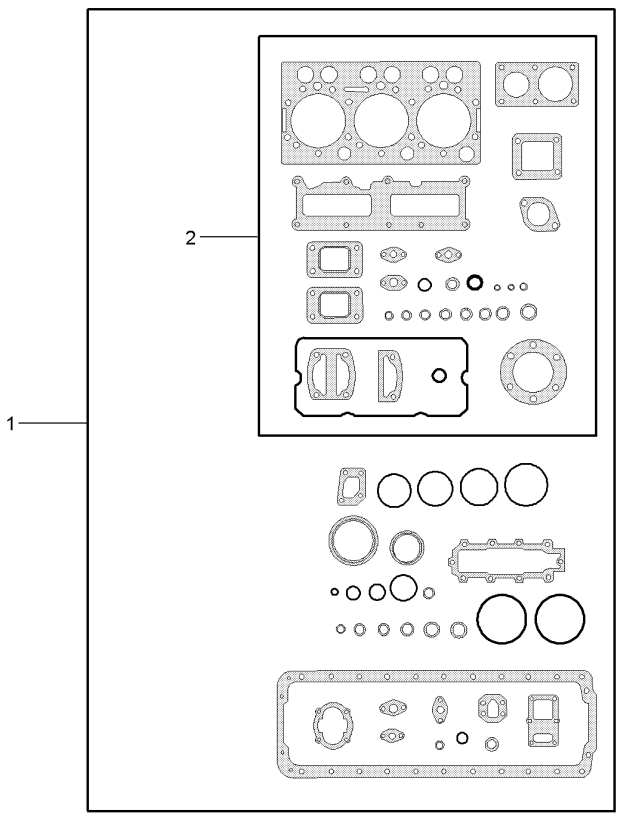

1	V837062628		**1**	KIT, GASKET	JEU JOINTS PLATS KIT GIUNTO PIANO	FLACHDICHT. SATZ KIT JUNTA PLANA
2	V837062627	1	**1**	KIT, GASKET	JEU JOINTS PLATS KIT GIUNTO PIANO	FLACHDICHT. SATZ KIT JUNTA PLANA

Heater Engine Block Rechauffeur Bloc Moteur Heizung Motor Riscaldatore Motore Calentador Motor	10-115	110 V 110 V 110 V 110 V 110 V

1-WC38-004-A

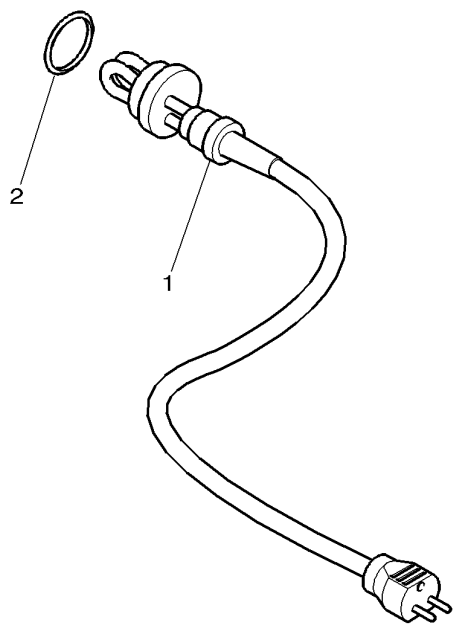

1	V836840934	**1**	HEATER	CHAUFFAGE RISCALDAMENTO	HEIZUNG CALENTADOR
2	V836840998	**1**	O RING	JOINT TORIQUE GIUNTO DI TENUTA	O-RING JUNTA TOROIDAL

Heater Engine Block
Rechauffeur Bloc Moteur
Heizung Motor
Riscaldatore Motore
Calentador Motor

10-120

220 V
220 V
220 V
220 V
220 V

1-WC38-003-B

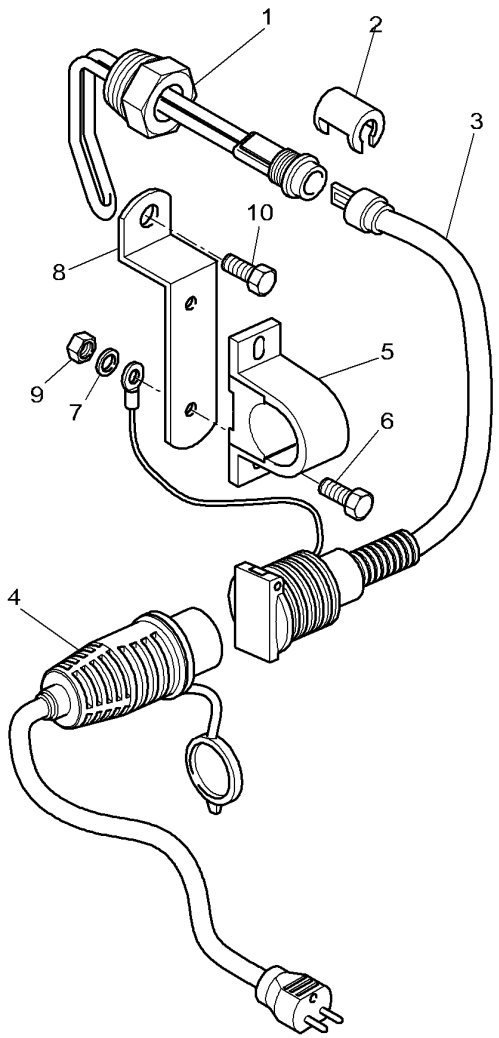

1	* 3615752M2		**1**	ELEMENT	ELEMENT ELEMENTO	ELEMENT ELEMENTO
2	* 3611974M2		**1**	CLIP	PATTE D'ATTACHE FERMAGLIO	SCHELLE CLIP
3	4270172M1		**1**	HARNESS	FAISCEAU FASCIOCAVI	KABELBAUM MAZO CABLES
4	4270169M1		**1**	LEAD	CABLE ELECTRIQUE PIOMBO	LEITUNG CONDUCTOR METAL
5	4270098M1		**1**	CLAMP	COLLIER FASCETTA	HALTESCHELLE ABRAZADERA
6	3010567X1	M5 X 16	**2**	PLOUGH BOLT	VIS A EMBASE VITE TESTA TONDA	SENKSCHLOSSSCHRB TORNILLO ALOJ C
7	339381X1		**1**	LOCK WASHER	RONDELLE FREIN RONDELLA ARRESTO	SICHERUNGSRING ARANDELA SEGURID
8	* 4270462M1		**1**	SUPPORT	SUPPORT SOPPORTO	TRAGER SOPORTE
9	3010477X1	M5	**2**	NUT METRIC	ECROU METRIQUE DADO METRICO	MUTTER METRISCH TUERCA METRICO
10	* 339124X1	M8 X 16	**1**	HEX. SOCK. SCREW	VIS TETE HEX VITE PARKER	ZYLINDERSCHRAUBE TORN.CAB.HUECA

Centrigual Oil Filter
Filtre A Huile Centrifuge
Schleude Hydraulikoelfilter
Filtro Olio Centrifugo
Filtro Aceite Centrifugo

10-125

1-WA13-001-A

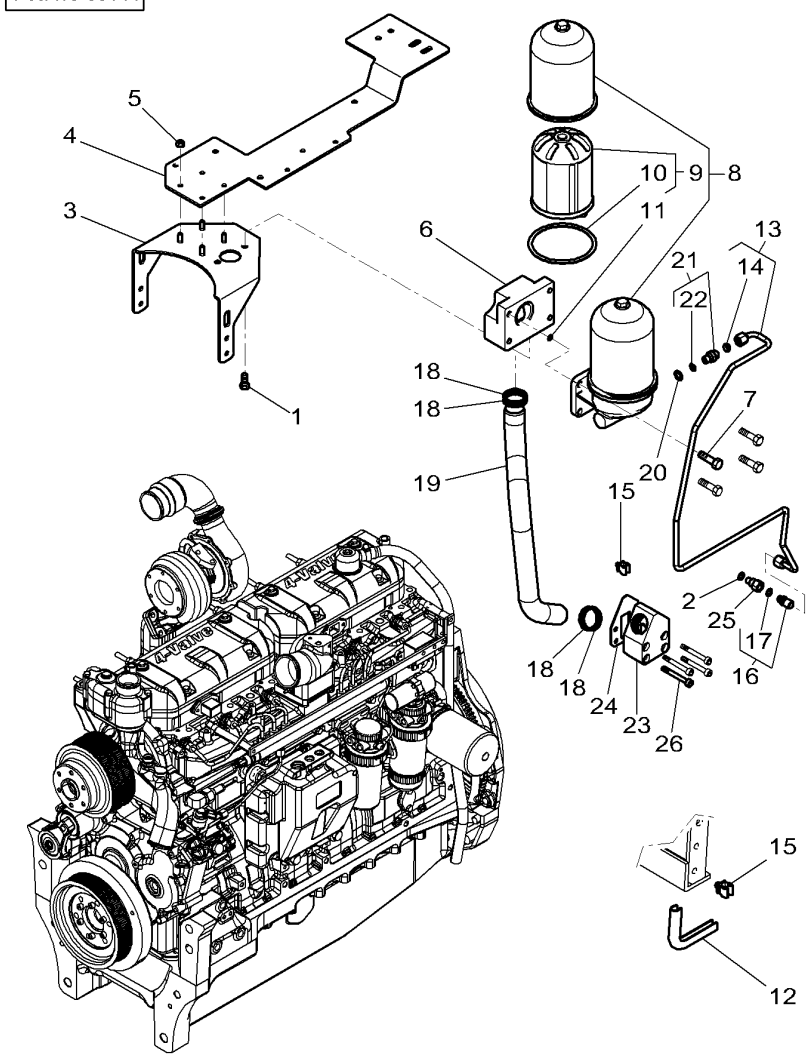

1	*	3010922X1	M14 X 30	**2**	HEX. SOCK. SCREW	VIS TETE HEX VITE PARKER	ZYLINDERSCHRAUBE TORN.CAB.HUECA
2	*	1444744X1		**1**	GASKET	JOINT GIUNTO PIANO	FLACHDICHTUNG JUNTA PLANA
3	*	4289116M2		**1**	SUPPORT	SUPPORT SOPPORTO	TRAGER SOPORTE
4	*	4289071M3		**1**	PLATE	PLAQUE PIASTRA	PLATTE PLATO
5	*	339402X1	M10	**4**	NUT SPECIAL	ECROU SPECIAL DADO SPECIALE	SPEZIALMUTTER TUERCA ESPECIAL
6	*	4288065M3		**1**	MANIFOLD	COLLECTEUR COLLETTORE	STEUERGEHAEUSE COLECTOR
7	*	3009493X1	M10 X 30	**4**	HEX. SOCK. SCREW	VIS TETE HEX VITE PARKER	ZYLINDERSCHRAUBE TORN.CAB.HUECA
8	*	V836359603		**1**	OIL FILTER	FILTRE HUILE FILTRO OLIO	OELFILTER FILTRO DE ACEITE
9	*	**V836362228**	8	**1**	KIT, ROTOR ASSY.	JEU ROTOR ROTORE COMPLETO	ROTORSATZ JGO.CJTO.ROTOR
10	*	**V836362229**	9	**1**	GASKET	JOINT GIUNTO PIANO	FLACHDICHTUNG JUNTA PLANA
11	*	V836664226	8	**1**	O RING	JOINT TORIQUE GIUNTO DI TENUTA	O-RING JUNTA TOROIDAL
12	*	4290252M1	∅ 305 MM	**1**	STAPLE	CAVALIER PONTICELLO	KRAMPE GRAPA.
13	*	4286128M92		**1**	PIPE	TUYAU TUBO	TUBE TUBO
14	*	3011804X1	13	**1**	BUSH	BAGUE BOCCOLA	RING CASQUILLO
15	*	X668468201000		**1**	CABLE CLAMP	SERRE CABLE SERRA CAVO	KABELSCHELLE ABRAZADERA CABLE
16	*	3011618X91		**1**	UNION	RACCORD RACCORDO	VERSCHRAUBUNG RACOR
17	*	338760X1	16	**1**	O RING	JOINT TORIQUE GIUNTO DI TENUTA	O-RING JUNTA TOROIDAL
18	*	3012016X1		**4**	O RING	JOINT TORIQUE GIUNTO DI TENUTA	O-RING JUNTA TOROIDAL
19	*	4287910M92		**1**	TUBE	TUBE TUBO.	ROHR TUBO.
20	*	3004861X1	∅ 12 MM	**1**	WASHER	RONDELLE RONDELLA	SCHEIBE ARANDELA
21	*	3011294X91		**1**	UNION	RACCORD RACCORDO	VERSCHRAUBUNG RACOR
22	*	338923X1	21	**1**	GASKET	JOINT GIUNTO PIANO	FLACHDICHTUNG JUNTA PLANA
23	*	V837067969		**1**	ADAPTER	RACCORD REDUC. ADAPTER	ADAPTER ADAPTER
24	*	V836866958		**1**	GASKET	JOINT GIUNTO PIANO	FLACHDICHTUNG JUNTA PLANA
25	*	V836120022		**1**	CONNECTION	CONNEXION CONNESSIONE	VERBINDUNG CONEXION
26	*	3009288X1	M8 X 50	**4**	SCREW METRIC	VIS METRIQUE VITE METRICA	SCHRAUBE METR TORNILLO METRICO

Cab Heating System Chauffage Cabine Kabinen-Heizungssystem Sistema Di Riscaldamento Sistema De Calefaccion De Cabina	Engine Part Partie Moteur Motor Teile Parte Motore Pieza De Motor	10-130

1-WC28-004-B

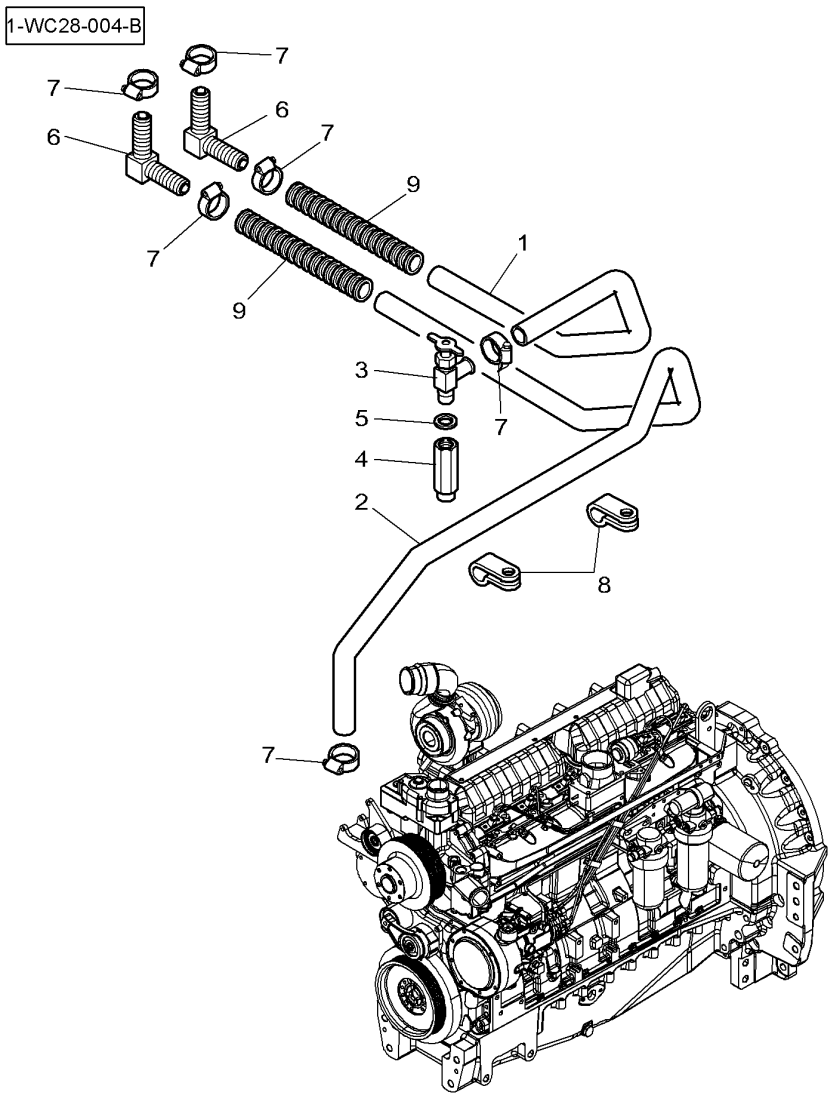

1	4277373M1	◀▶	1100 MM	**1**	HOSE	DURITE TUBO FLESSIBILE	SCHLAUCH TUBO DE GOMA
2	3387945M1	◀▶ ➡	2200 MM 19-SEP-2006	**1**	HOSE	DURITE TUBO FLESSIBILE	SCHLAUCH TUBO DE GOMA
2*	4277817M1	∅ ◀▶ ➡	16-23 MM 2170 MM 20-SEP-2006	**1**	HOSE	DURITE TUBO FLESSIBILE	SCHLAUCH TUBO DE GOMA
3	30-3076830			**1**	VALVE	SOUPAPE VALVOLA	VENTIL VALVULA
4	5015331M1			**1**	ADAPTOR	ADAPTATEUR ADATTATORE	REDUZIERNIPPEL ADAPTADOR
5	339526X1	∅	18-24 X 1,5	**1**	SEAL	JOINT ETANCHEITE GIUNTO ROTONDO	DICHTRING JUNTA REDONDA
6	3788222M1			**2**	ELBOW	COUDE GOMITO	WINKELSTUECK CODO
7	3820729M1			**6**	HOSE CLIP	COLLIER DURITE COLLARE DI TUBO	SCHLAUCHBINDER ABRAZADERA TUBO
8	3581424M1	∅	30 - M8	**2**	CLIP	PATTE D'ATTACHE FERMAGLIO	SCHELLE CLIP
8	4273333M1	∅	45 - M8	**2**	CLAMP	COLLIER FASCETTA	HALTESCHELLE ABRAZADERA
9*	4282254M1	➡	R285063	**2**	SHEATH	GAINE GUAINA	HUELLE FUNDA

Fuel Tank & Attachments
Reservoir A Carburant Et Fixation
Kraftstoffbehaelter Und Befestig.
Serbatoio Nafta E Fissaggio
Deposito Combustible Sujecciones

10-135

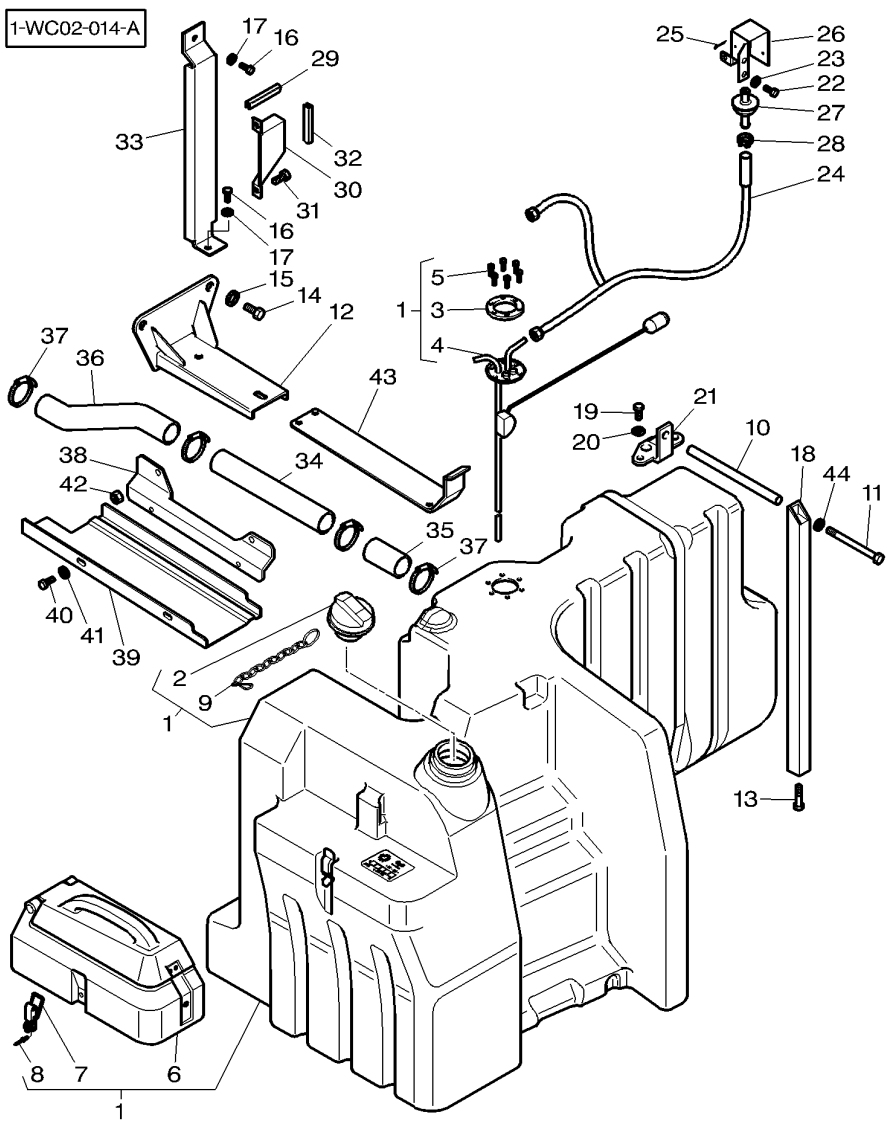

1	4275493M93	350L	**1**	TANK	RESERVOIR SERBATOIO	TANK DEPOSITO
2	3786050M1	1	**1**	PLUG	BOUCHON TAPPO	STOPFEN TAPON
3	4279002M1	1	**1**	GASKET	JOINT GIUNTO PIANO	FLACHDICHTUNG JUNTA PLANA
4	4279578M2	1	**1**	FUEL GAUGE	JAUGE CARBURANT INDICAT.LIVELLO	KRAFTST-MESSER INDIC.COMBUST.
5	3005728X1	1 No 10 X 16	**6**	SCREW	VIS VITE	SCHRAUBE TORNILLO
6	3786754M91	1	**1**	TOOL BOX	BOITE A OUTILS CASSETTA ATTREZZ	WERKZEUGKASTEN CAJA HERRAMIENTA
7	3786764M1	1	**1**	LATCH	VERROU DENTE DI ARRESTO	KLINKE TOPE
8	3005728X1	1 No 10 X 16	**2**	SCREW	VIS VITE	SCHRAUBE TORNILLO
9	4275605M1	1	**1**	CHAIN	CHAINE CATENA	KETTE CADENA
10	4279591M1	◀▶ 148 MM	**1**	TUBE	TUBE TUBO.	ROHR TUBO.
11	3011649X1	M10 X 180	**1**	SCREW	VIS VITE	SCHRAUBE TORNILLO
12	4275582M2		**1**	SUPPORT	SUPPORT SOPPORTO	TRAGER SOPORTE
13	390122X1	M10 X 80	**1**	HEX. SOCK. SCREW	VIS TETE HEX VITE PARKER	ZYLINDERSCHRAUBE TORN.CAB.HUECA
14	391269X1	M16 X 30	**2**	HEX. SOCK. SCREW	VIS TETE HEX VITE PARKER	ZYLINDERSCHRAUBE TORN.CAB.HUECA
15	1441664X1	∅ 16-30 X 3	**2**	FLAT WASHER	RONDELLE PLATE RONDELLE PIANA	UNTERLEGSCHEIBEN ARANDELA PLANA
16	3009491X1	M10 X 20	**2**	HEX. SOCK. SCREW	VIS TETE HEX VITE PARKER	ZYLINDERSCHRAUBE TORN.CAB.HUECA
17	390734X1	∅ 10-21 X 2	**2**	FLAT WASHER	RONDELLE PLATE RONDELLE PIANA	UNTERLEGSCHEIBEN ARANDELA PLANA
18	4279582M1		**1**	REINFORCEMENT	RENFORT RINFORZO	VERSTAERKUNG REFUERZO
19	3009491X1	M10 X 20	**3**	HEX. SOCK. SCREW	VIS TETE HEX VITE PARKER	ZYLINDERSCHRAUBE TORN.CAB.HUECA
20	390734X1	∅ 10-21 X 2	**3**	FLAT WASHER	RONDELLE PLATE RONDELLE PIANA	UNTERLEGSCHEIBEN ARANDELA PLANA
21	4275583M2		**1**	BRIDLE	BRIDE BRIGLIA	LASCHENSPANNBAND BRIDA
22	339123X1	M8 X 20	**1**	HEX. SOCK. SCREW	VIS TETE HEX VITE PARKER	ZYLINDERSCHRAUBE TORN.CAB.HUECA
23	390972X1	∅ 8-17 X 1,7	**1**	FLAT WASHER	RONDELLE PLATE RONDELLE PIANA	UNTERLEGSCHEIBEN ARANDELA PLANA
24*	4278965M2		**1**	HYDR. HOSE	FLEXIBLE TUBOFLEX IDRAUL	HYDR. SCHLAUCH TUBO HIDRAULICO
25	1442970X1	∅ 4 X 63	**2**	SPLIT PIN	GOUPILLE FENDUE COPIGLIA	SPALTBOLZEN PASADOR HENDIDO
26	3808024M2		**1**	HOUSING	CARTER CARCASSA	GEHAEUSE ALOJAMIENTO

Fuel Tank & Attachments
Reservoir A Carburant Et Fixation
Kraftstoffbehaelter Und Befestig.
Serbatoio Nafta E Fissaggio
Deposito Combustible Sujecciones

10-135

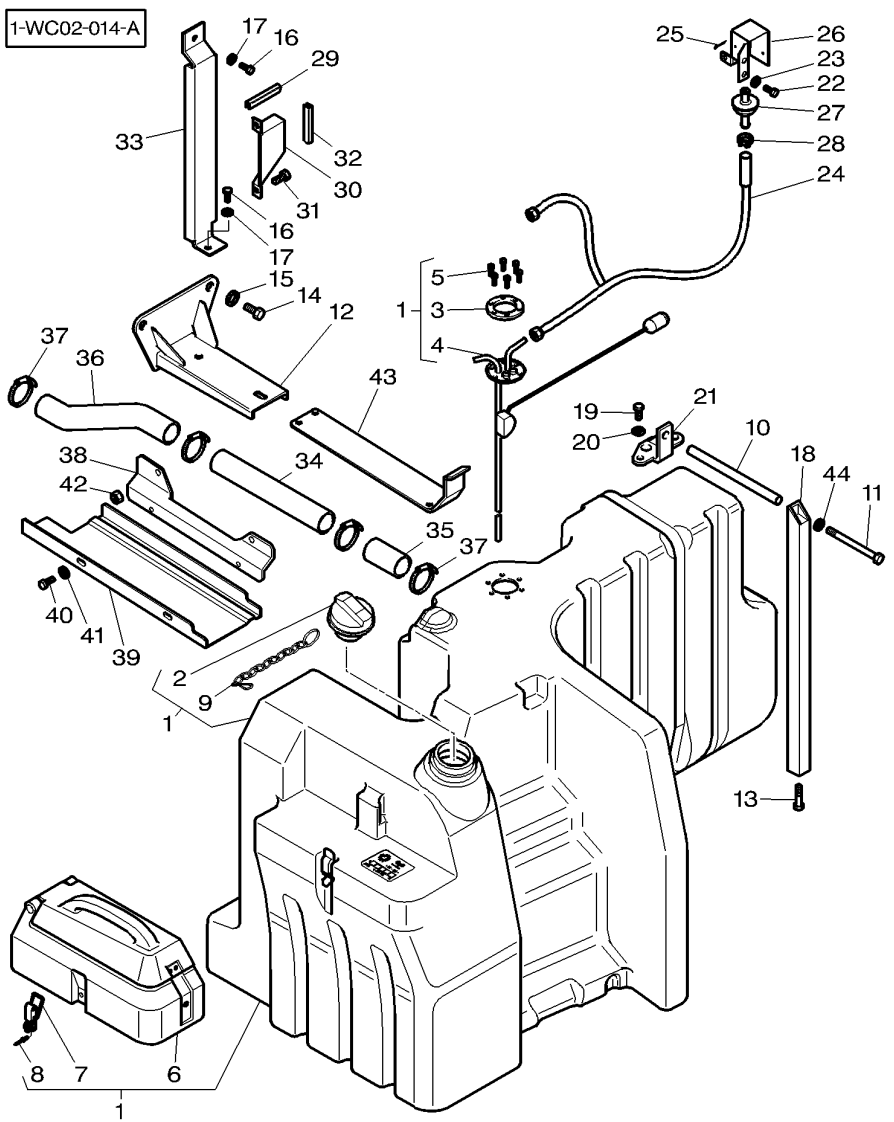

27	**3808023M91**		
28	3712465M1	∅	15 MM
29	4277715M1	◄►	60 MM
30	916101170010		
31	339560X1		M6 X 16
32	4277714M1		[A]
		◄►	45 MM
33	4277720M1		
34	4275653M2		
35	4274265M1		
36	4277471M1	◄►	300 MM
37	338618X1	∅	50-70
38	4276942M3		
39	4276949M1		
40	3009491X1		M10 X 20
41	390734X1	∅	10-21 X 2
42	339034X1		M16
43	4279012M2		
44	390734X1		

[A] CUT TO REQUIRED LENGTH
COUPER A LA LONGEUR DESIREE
BENOETIGTE LAENGE ABSCHNEIDEN
TAGLIARE ALLA LUNGHEZZA DESIDERATA
CORTAR A LA LONGITUD DESEADA

1	NON RETURN VALVE	CLAPET VALVOLA NO RITOR	RUECKSCHLAGVENT. VALV.SIN RETORNO
1	HOSE CLIP	COLLIER DURITE COLLARE DI TUBO	SCHLAUCHBINDER ABRAZADERA TUBO
1	PROTECTOR	PROTECTEUR PROTETTORE	SCHUTZ PROTECTOR
1	PROTECTOR	PROTECTEUR PROTETTORE	SCHUTZ PROTECTOR
2	HEX. SOCK. SCREW	VIS TETE HEX VITE PARKER	ZYLINDERSCHRAUBE TORN.CAB.HUECA
1	PROTECTOR	PROTECTEUR PROTETTORE	SCHUTZ PROTECTOR
1	STOP	BUTEE STOP	ANSCHLAG PARO
1	TUBE	TUBE TUBO.	ROHR TUBO.
1	HOSE	DURITE TUBO FLESSIBILE	SCHLAUCH TUBO DE GOMA
1	HOSE	DURITE TUBO FLESSIBILE	SCHLAUCH TUBO DE GOMA
4	HOSE CLIP	COLLIER DURITE COLLARE DI TUBO	SCHLAUCHBINDER ABRAZADERA TUBO
1	ANGLE.	EQUERRE. ANGOLO	WINKEL ANGULO
1	COWL	GARANT CAPPOTTATURA	AUFSATZ CAPERUZA
2	HEX. SOCK. SCREW	VIS TETE HEX VITE PARKER	ZYLINDERSCHRAUBE TORN.CAB.HUECA
2	FLAT WASHER	RONDELLE PLATE RONDELLE PIANA	UNTERLEGSCHEIBEN ARANDELA PLANA
2	NUT	ECROU DADO	MUTTER TUERCA
1	STOP	BUTEE STOP	ANSCHLAG PARO
1	FLAT WASHER	RONDELLE PLATE RONDELLE PIANA	UNTERLEGSCHEIBEN ARANDELA PLANA

Additional Tank
Reservoir Supplementaire
Zusastzlich Tank
Serbatoio Addizionale
Caja Supplementario

10-140

1-WC04-006-B

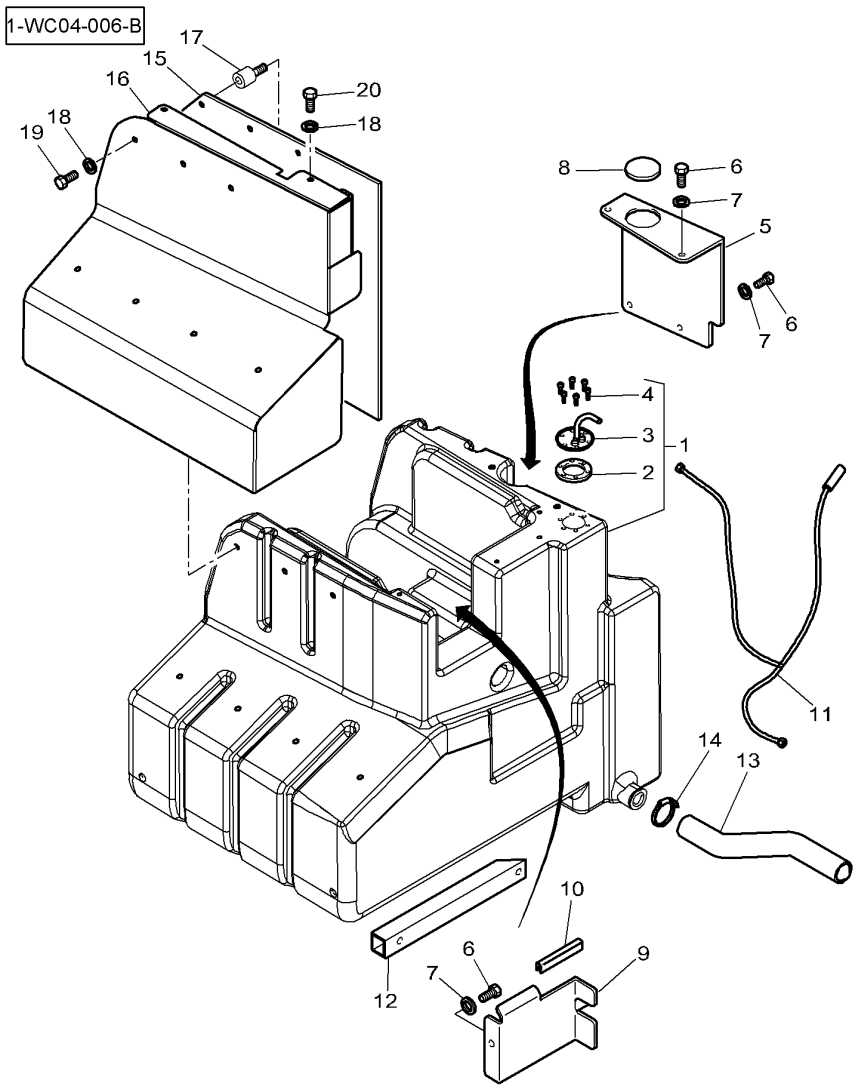

1*	4275495M92		**1**	TANK	RESERVOIR SERBATOIO	TANK DEPOSITO
2	1617869M2	1	**1**	GASKET	JOINT GIUNTO PIANO	FLACHDICHTUNG JUNTA PLANA
3	4275229M2	1	**1**	TUBE	TUBE TUBO.	ROHR TUBO.
4	3005728X1	1 No 10 X 16	**6**	SCREW	VIS VITE	SCHRAUBE TORNILLO
5	4277512M2		**1**	COWL	GARANT CAPPOTTATURA	AUFSATZ CAPERUZA
6	3007934X1	CBZ M6 X 16	**6**	SCREW	VIS VITE	SCHRAUBE TORNILLO
7	391038X1	∅ 6-18 X 1,5	**6**	FLAT WASHER	RONDELLE PLATE RONDELLE PIANA	UNTERLEGSCHEIBEN ARANDELA PLANA
8	4282050M1	∅ 60 MM	**1**	PLUG	BOUCHON TAPPO	STOPFEN TAPON
9	4278335M2		**1**	SHIELD	TOLE RIPARO	SCHILD BLINDAJE
10	4271654M1	◄► 75 MM	**1**	GASKET	JOINT GIUNTO PIANO	FLACHDICHTUNG JUNTA PLANA
11*	4278965M2		**1**	HYDR. HOSE	FLEXIBLE TUBOFLEX IDRAUL	HYDR. SCHLAUCH TUBO HIDRAULICO
12	4279592M1		**1**	STOP	BUTEE STOP	ANSCHLAG PARO
13	4277471M1	◄► 300 MM	**1**	HOSE	DURITE TUBO FLESSIBILE	SCHLAUCH TUBO DE GOMA
14	338618X1	∅ 50-70	**1**	HOSE CLIP	COLLIER DURITE COLLARE DI TUBO	SCHLAUCHBINDER ABRAZADERA TUBO
15*	4289939M1		**1**	INSULATOR	ISOLANT ISOLANTE	ISOLATOR PROD.AISLANTE
16*	4289963M1		**1**	COWL	GARANT CAPPOTTATURA	AUFSATZ CAPERUZA
17*	3583548M1		**7**	DOWEL	PLOT SPINA	ZYLINDERSTIFT CENTRAJE
18*	391038X1	∅ 6-18 X 1,5	**8**	FLAT WASHER	RONDELLE PLATE RONDELLE PIANA	UNTERLEGSCHEIBEN ARANDELA PLANA
19*	390916X1	M6 X 8	**7**	HEX. SOCK. SCREW	VIS TETE HEX VITE PARKER	ZYLINDERSCHRAUBE TORN.CAB.HUECA
20*	339560X1	M6 X 16	**1**	HEX. SOCK. SCREW	VIS TETE HEX VITE PARKER	ZYLINDERSCHRAUBE TORN.CAB.HUECA

Fuel Pipes
Tuyauteries A Carburant
Kraftstof Leitungen
Tubazioni A Nafta
Conducciones A Combustible

10-145

1-WH16-005-A

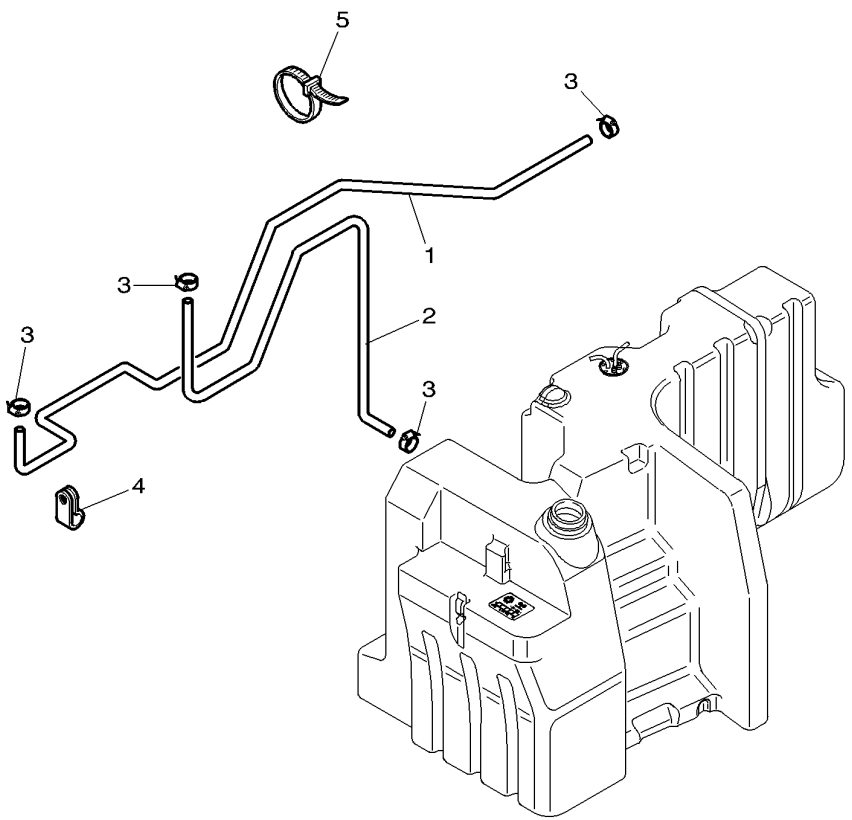

1	4280428M3	◀▶	1300 MM	**1**	HYDR. HOSE	FLEXIBLE TUBOFLEX IDRAUL | HYDR. SCHLAUCH TUBO HIDRAULICO
2	4280429M2	➡|	S026041	**1**	HYDR. HOSE	FLEXIBLE TUBOFLEX IDRAUL | HYDR. SCHLAUCH TUBO HIDRAULICO
		◀▶	1850 MM			
2*	4286332M1	➡	S026042	**1**	HYDR. HOSE	FLEXIBLE TUBOFLEX IDRAUL | HYDR. SCHLAUCH TUBO HIDRAULICO
		◀▶	1090 MM			
3	3712465M1	∅	15 MM	**4**	HOSE CLIP	COLLIER DURITE COLLARE DI TUBO	SCHLAUCHBINDER ABRAZADERA TUBO
4	3387756M1	∅	16 - M8	**1**	CLIP	PATTE D'ATTACHE FERMAGLIO	SCHELLE CLIP
5	3619622M1			**3**	CABLE TIE	ATTACHE CABLE FASCETTA CAVI	KABELBINDER APRIETACABLES

Fuel System
Systeme D'Alimentation Carburant
Kraftstoffanlage
Tubazioni Nafta
Sistema Combustible

10-150

1-WC64-011-A

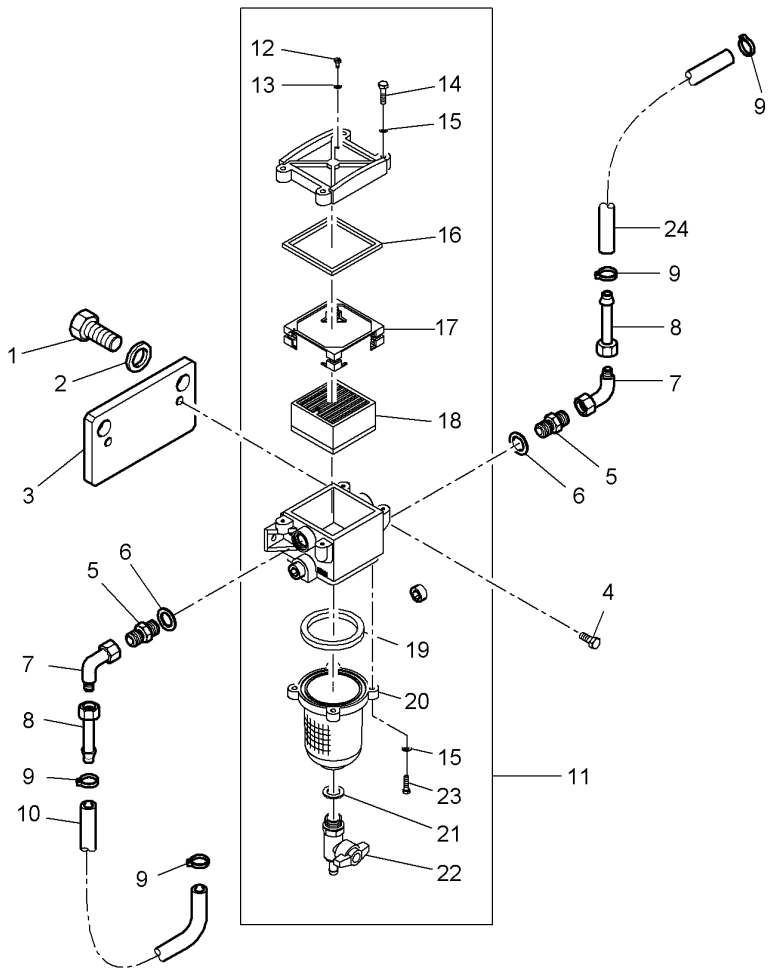

1*	391120X1	M16 X 45	**2**	HEX. SOCK. SCREW	VIS TETE HEX VITE PARKER	ZYLINDERSCHRAUBE TORN.CAB.HUECA
2*	1441664X1	∅ 16-30 X 3	**2**	FLAT WASHER	RONDELLE PLATE RONDELLE PIANA	UNTERLEGSCHEIBEN ARANDELA PLANA
3*	4288321M1		**1**	SUPPORT	SUPPORT SOPPORTO	TRAGER SOPORTE
4*	339124X1	M8 X 16	**2**	HEX. SOCK. SCREW	VIS TETE HEX VITE PARKER	ZYLINDERSCHRAUBE TORN.CAB.HUECA
5*	3019574X1	M16 - 9/16-18	**2**	UNION	RACCORD RACCORDO	VERSCHRAUBUNG RACOR
6*	3019396X1		**2**	O RING	JOINT TORIQUE GIUNTO DI TENUTA	O-RING JUNTA TOROIDAL
7*	364603X1		**2**	ELBOW	COUDE GOMITO	WINKELSTUECK CODO
8*	4288361M1		**2**	TUBE	TUBE TUBO.	ROHR TUBO.
9*	3712465M1		**4**	HOSE CLIP	COLLIER DURITE COLLARE DI TUBO	SCHLAUCHBINDER ABRAZADERA TUBO
10*	4288320M1	◄► 745 MM	**1**	HYDR. HOSE	FLEXIBLE TUBOFLEX IDRAUL	HYDR. SCHLAUCH TUBO HIDRAULICO
11*	G916200060100		**1**	PRE FILTER	PRE FILTRE PREFILTRO	VORFILTER PRE FILTRO
12*	F916200060090	11	**1**	SCREW	VIS VITE	SCHRAUBE TORNILLO
13*	F916200060020	11	**1**	GASKET	JOINT GIUNTO PIANO	FLACHDICHTUNG JUNTA PLANA
14*	X486517800000	11 M5 X 30	**4**	SCREW	VIS VITE	SCHRAUBE TORNILLO
15*	X450003908000	11	**8**	DISC	DISQUE DISCO	SCHEIBE DISCO
16*	F916200060081	11	**1**	GASKET	JOINT GIUNTO PIANO	FLACHDICHTUNG JUNTA PLANA
17*	F916200060070	11	**1**	PLATE	PLAQUE PIASTRA	PLATTE PLATO
18*	F916200060010	11 30 MICRONS	**1**	FILTER ELEMENT	ELEMENT FILTRANT ELEMENTO FILTRAN	FILTEREINSATZ ELEMENTO FILTRAN
18*	F916200060100	11 50 MICRONS	**1**	FILTER ELEMENT	ELEMENT FILTRANT ELEMENTO FILTRAN	FILTEREINSATZ ELEMENTO FILTRAN
19*	F916200060061	11	**1**	JOINT.	JOINT PLAT GIUNTO	DICHTUNG JUNTA
20*	F916200060050	11	**1**	CONTAINER	CUVE CONTENITORE	BEHAELTER CONTENEDOR
21*	F916200060040	11	**1**	GASKET	JOINT GIUNTO PIANO	FLACHDICHTUNG JUNTA PLANA
22*	F916200060030	11	**1**	BLEEDER	PURGEUR VALVOLA SPURGO	ABLASSHAHN SANGRADOR
23*	X487517441000	11 M5 X 20	**4**	SCREW	VIS VITE	SCHRAUBE TORNILLO
24*	4280428M3	◄► 1300 MM	**1**	HYDR. HOSE	FLEXIBLE TUBOFLEX IDRAUL	HYDR. SCHLAUCH TUBO HIDRAULICO

Batteries And Cables
Batterie Et Cables
Batterie Und Kabel
Batteria A Cavo
Batterie Y Cable

10-155

Without Battery Cut-Off W/O Positive Connection
Sans Coupe Batterie Sans Borne Positive
Ohne Unterbrecher Ohne Doppel Nippel
Sin Ruttore Sin Morsetto
Senza Ruptor Senza Conector

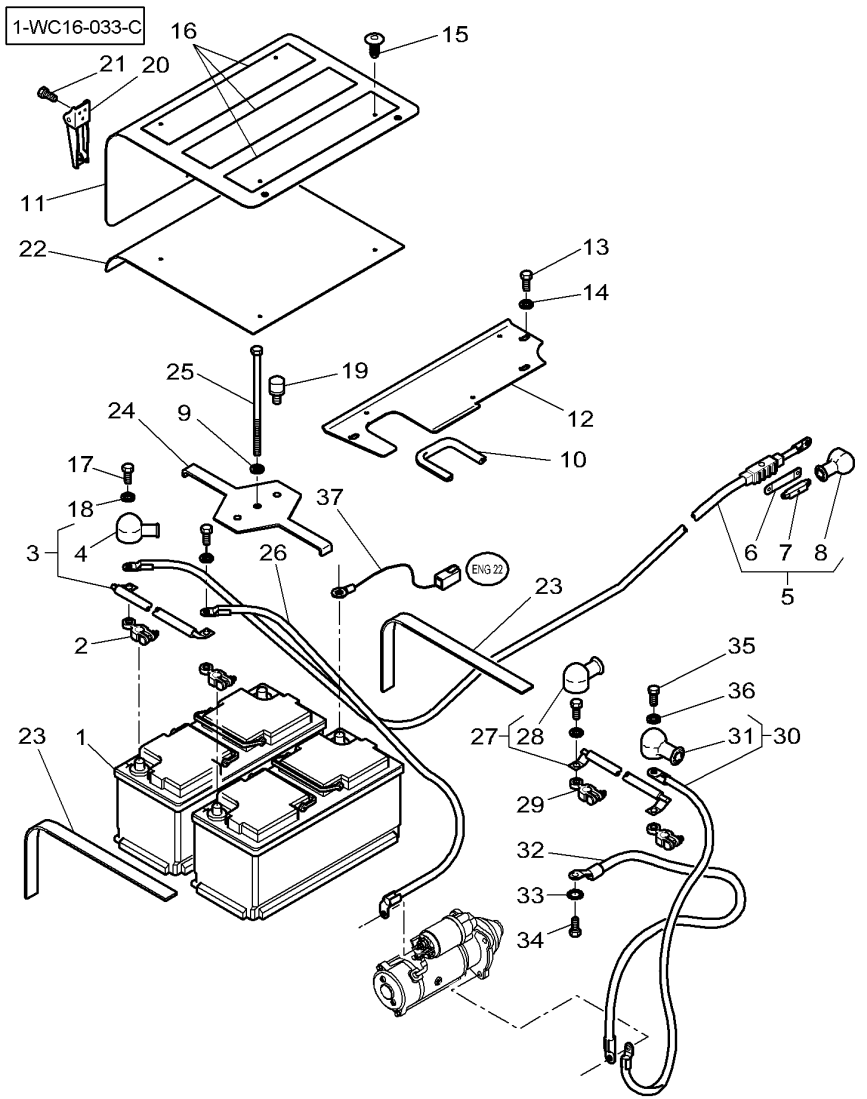

1		[AB]	**2**	BATTERY	BATTERIE BATTERIA	BATTERIE BATERIA
2	4276408M1	+	**2**	CONNECTOR	BORNE. MORSETTO.	DOPPELNIPPEL CONECTOR
3	4274946M1	◀▶ 190 MM +	**1**	CABLE	CABLE CAVO	KABEL CABLE
4	3784666M1	3 ➡ P311010	**2**	HELMET	CAPUCHON CASCO	SCHUTZHELM CASCO
5	4274519M3	◀▶ 1870 MM +	**1**	CABLE	CABLE CAVO	KABEL CABLE
6	**4276186M1**	5 150 AMP	**1**	FUSE	FUSIBLE FUSIBILE	SICHERUNG FUSIBLE
7*	3789733M2	5	**1**	CASE ASSY	BOITIER CARCASSA COMPLET	GEHAEUSE KPL CAJA COMPLETA
8	3784666M1	5	**1**	HELMET	CAPUCHON CASCO	SCHUTZHELM CASCO
9	390597X1	∅ 10-30 X 2,5	**1**	FLAT WASHER	RONDELLE PLATE RONDELLE PIANA	UNTERLEGSCHEIBEN ARANDELA PLANA
10	3784893M1	◀▶ 204 MM	**1**	GASKET	JOINT GIUNTO PIANO	FLACHDICHTUNG JUNTA PLANA
11	4278304M3		**1**	COVER	COUVERCLE COPERCHIO	ABDECKUNG. CUBIERTA
12	4278305M2		**1**	BRIDLE	BRIDE BRIGLIA	LASCHENSPANNBAND BRIDA
13	339124X1	M8 X 16	**4**	HEX. SOCK. SCREW	VIS TETE HEX VITE PARKER	ZYLINDERSCHRAUBE TORN.CAB.HUECA
14	390972X1	∅ 8-17 X 1,7	**4**	FLAT WASHER	RONDELLE PLATE RONDELLE PIANA	UNTERLEGSCHEIBEN ARANDELA PLANA
15	4275057M1		**4**	BUTTON	BOUTON BOTTONE	KNOPFTASTE BOTON
16	4280036M1	370 X 70	**3**	RUBBER STRAP	BANDE CAOUTCHOUC NASTRO IN GOMMA	GUMMIBAND BANDA DE GOMA
17	1440433X1	M10 X 16	**2**	HEX. SOCK. SCREW	VIS TETE HEX VITE PARKER	ZYLINDERSCHRAUBE TORN.CAB.HUECA
18	390734X1	∅ 10-21 X 2	**2**	FLAT WASHER	RONDELLE PLATE RONDELLE PIANA	UNTERLEGSCHEIBEN ARANDELA PLANA
19	4278306M1		**2**	SHOCK ABSORBER	AMORTISSEUR CHOC AMMORTIZZATORE	STOSSDAEMPFER AMORTIGUADOR
20	4278351M1		**1**	TIE	ATTACHE TRAVERSA ATTACCO	ANBINDUNG BARRA DE ENLACE
21*	3008179X1	M4 X 10	**3**	SCREW	VIS VITE	SCHRAUBE TORNILLO
22	4278782M3		**1**	SOUND REDUCTION	INSONORISATION INSONORIZZANTE	SCHALLDAEMMUNG REDUCTOR SONIDO
23	4278758M1		**1**	GASKET	JOINT GIUNTO PIANO	FLACHDICHTUNG JUNTA PLANA
24	4275106M2		**1**	BRIDLE	BRIDE BRIGLIA	LASCHENSPANNBAND BRIDA
25	392882X1	M10 X 240	**1**	HEX. SOCK. SCREW	VIS TETE HEX VITE PARKER	ZYLINDERSCHRAUBE TORN.CAB.HUECA
26	4274520M1	◀▶ 1220 MM +	**1**	CABLE	CABLE CAVO	KABEL CABLE

Batteries And Cables
Batterie Et Cables
Batterie Und Kabel
Batteria A Cavo
Batterie Y Cable

10-155

Without Battery Cut-Off W/O Positive Connection
Sans Coupe Batterie Sans Borne Positive
Ohne Unterbrecher Ohne Doppel Nippel
Sin Ruttore Sin Morsetto
Senza Ruptor Senza Conector

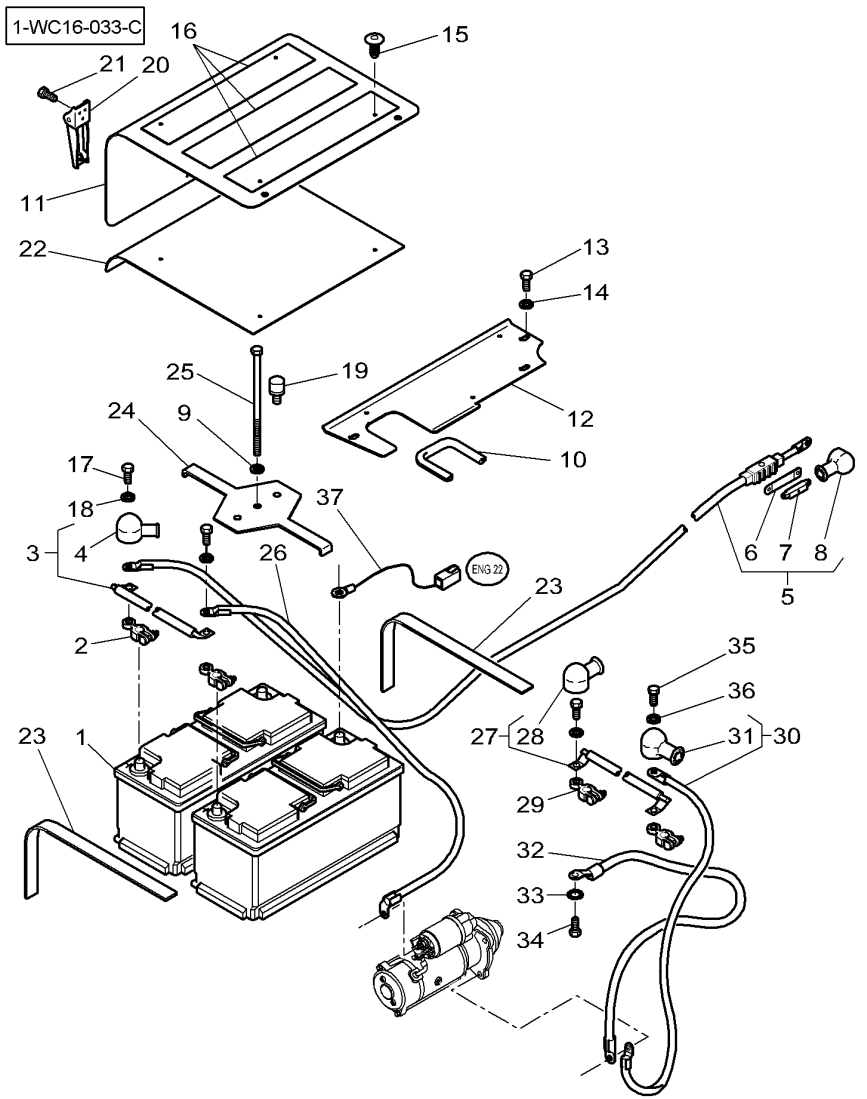

27	4274518M1	◀▶ 190 MM	**1**	CABLE	CABLE CAVO	KABEL CABLE
28	3784666M1	27	**2**	HELMET	CAPUCHON CASCO	SCHUTZHELM CASCO
29	4276409M1	-	**2**	CONNECTOR	BORNE. MORSETTO.	DOPPELNIPPEL CONECTOR
30	4275488M2		**1**	CABLE	CABLE CAVO	KABEL CABLE
31	3784666M1	30	**1**	HELMET	CAPUCHON CASCO	SCHUTZHELM CASCO
32	3788045M1	◀▶ 750 MM	**1**	CABLE	CABLE CAVO	KABEL CABLE
33	3010604X1	-	**1**	TOOTH WASHER	RONDELLE DENTEE ROSETTA DENTATA	ZAHNSCHEIBE ARANDELA ESTRELL
34	3009491X1	M10 X 20	**1**	HEX. SOCK. SCREW	VIS TETE HEX VITE PARKER	ZYLINDERSCHRAUBE TORN.CAB.HUECA
35	339124X1	M8 X 16	**2**	HEX. SOCK. SCREW	VIS TETE HEX VITE PARKER	ZYLINDERSCHRAUBE TORN.CAB.HUECA
36	390972X1	∅ 8-17 X 1,7	**2**	FLAT WASHER	RONDELLE PLATE RONDELLE PIANA	UNTERLEGSCHEIBEN ARANDELA PLANA
37	4276513M2	◀▶ 1800 MM	**1**	HARNESS	FAISCEAU FASCIOCAVI	KABELBAUM MAZO CABLES

[A] PLEASE REFER TO MARKETING CATALOG
CONSULTER LE CATALOGUE MARKETING
DEN MARKETINGSKATALOG ZU KONSULTIEREN
CONSULTAR IL CATALOGO MARKETING
CONSULTAR EL CATALOGO MARKETING

[B] THE APPROPRIATE SAFETY DECALS MUST BE ORDERED AND FITTED TO THIS PART
CETTE PIECE DOIT ETRE IMPERATIVEMENT COMMANDEE AVEC SA DECALCOMANIE DE SECURITE
DIESES TEIL MUSS UNBEDINGT ZUSAMMEN MIT DEM SICHER HEITSHINWEISSCHILD BESTELLT WERDEN
QUESTA PARTE DEVE ESSERE IMPERATIVAMENTO COMANDATA CON LA SUA DECALCOMANIA SICUREZZA
ESTA PARTE DEBE ENCARGARSE IMPERATIVAMENTE CON SU CALCOMANIA DE SEGURIDAD

Batteries And Cables
Batterie Et Cables
Batterie Und Kabel
Batteria A Cavo
Batterie Y Cable

10-160

Without Battery Cut-Off With Positive Connection
Sans Coupe Batterie Avec Borne Positive
Ohne Unterbrecher Mit Doppelnippel
Sin Ruttore Con Morsetto
Senza Ruptor Con Conector

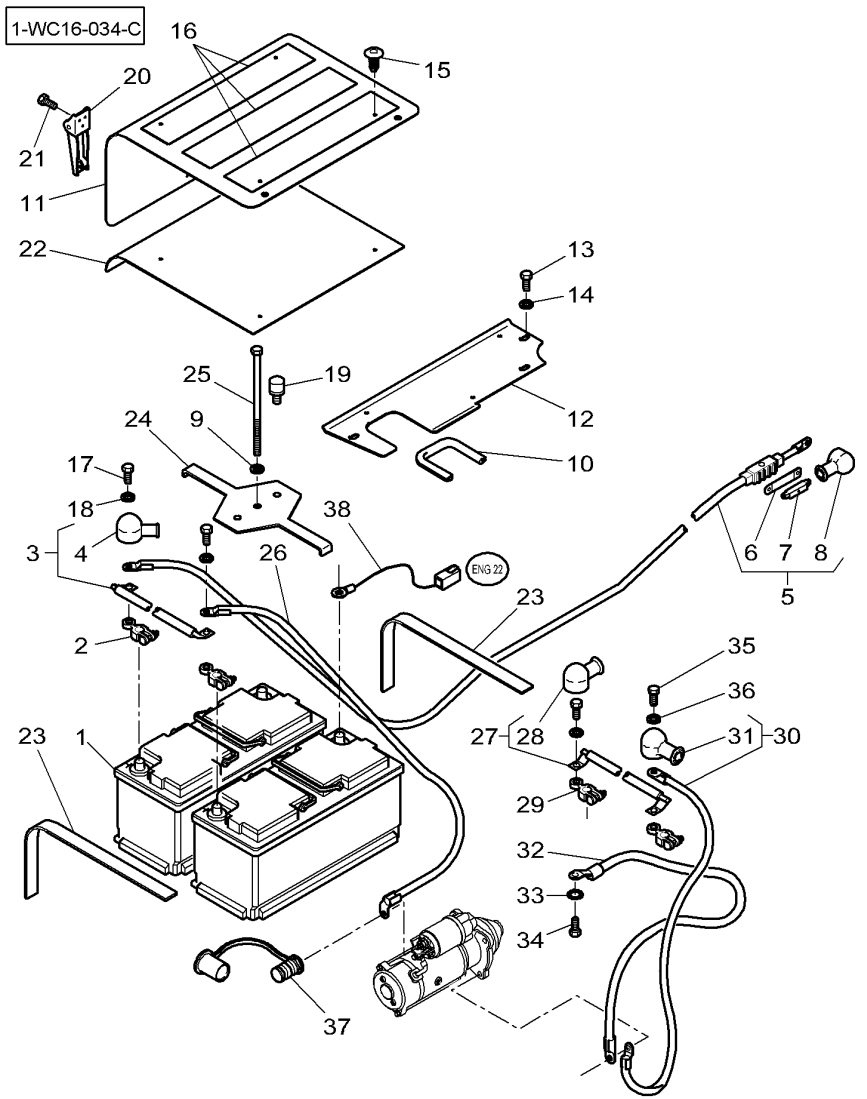

1		[AB]	**2**	BATTERY	BATTERIE BATTERIA	BATTERIE BATERIA
2	4276408M1	+	**2**	CONNECTOR	BORNE. MORSETTO.	DOPPELNIPPEL CONECTOR
3*	4274946M1	◀▶ 190 MM +	**1**	CABLE	CABLE CAVO	KABEL CABLE
4	3784666M1	3 ➡▮ P311010	**2**	HELMET	CAPUCHON CASCO	SCHUTZHELM CASCO
5	4274519M3	◀▶ 1870 MM +	**1**	CABLE	CABLE CAVO	KABEL CABLE
6	**4276186M1**	5 150 AMP	**1**	FUSE	FUSIBLE FUSIBILE	SICHERUNG FUSIBLE
7*	3789733M2	5	**1**	CASE ASSY	BOITIER CARCASSA COMPLET	GEHAEUSE KPL CAJA COMPLETA
8	3784666M1	5	**1**	HELMET	CAPUCHON CASCO	SCHUTZHELM CASCO
9	390597X1	∅ 10-30 X 2,5	**1**	FLAT WASHER	RONDELLE PLATE RONDELLE PIANA	UNTERLEGSCHEIBEN ARANDELA PLANA
10	3784893M1	◀▶ 204 MM	**1**	GASKET	JOINT GIUNTO PIANO	FLACHDICHTUNG JUNTA PLANA
11	4278304M3		**1**	COVER	COUVERCLE COPERCHIO	ABDECKUNG. CUBIERTA
12	4278305M2		**1**	BRIDLE	BRIDE BRIGLIA	LASCHENSPANNBAND BRIDA
13	339124X1	M8 X 16	**4**	HEX. SOCK. SCREW	VIS TETE HEX VITE PARKER	ZYLINDERSCHRAUBE TORN.CAB.HUECA
14	390972X1	∅ 8-17 X 1,7	**4**	FLAT WASHER	RONDELLE PLATE RONDELLE PIANA	UNTERLEGSCHEIBEN ARANDELA PLANA
15	4275057M1		**4**	BUTTON	BOUTON BOTTONE	KNOPFTASTE BOTON
16	4280036M1	370 X 70	**3**	RUBBER STRAP	BANDE CAOUTCHOUC NASTRO IN GOMMA	GUMMIBAND BANDA DE GOMA
17	1440433X1	M10 X 16	**2**	HEX. SOCK. SCREW	VIS TETE HEX VITE PARKER	ZYLINDERSCHRAUBE TORN.CAB.HUECA
18	390734X1	∅ 10-21 X 2	**2**	FLAT WASHER	RONDELLE PLATE RONDELLE PIANA	UNTERLEGSCHEIBEN ARANDELA PLANA
19	4278306M1		**2**	SHOCK ABSORBER	AMORTISSEUR CHOC AMMORTIZZATORE	STOSSDAEMPFER AMORTIGUADOR
20	4278351M1		**1**	TIE	ATTACHE TRAVERSA ATTACCO	ANBINDUNG BARRA DE ENLACE
21*	3008179X1	M4 X 10	**3**	SCREW	VIS VITE	SCHRAUBE TORNILLO
22	4278782M3		**1**	SOUND REDUCTION	INSONORISATION INSONORIZZANTE	SCHALLDAEMMUNG REDUCTOR SONIDO
23	4278758M1		**1**	GASKET	JOINT GIUNTO PIANO	FLACHDICHTUNG JUNTA PLANA
24	4275106M2		**1**	BRIDLE	BRIDE BRIGLIA	LASCHENSPANNBAND BRIDA
25	392882X1	M10 X 240	**1**	HEX. SOCK. SCREW	VIS TETE HEX VITE PARKER	ZYLINDERSCHRAUBE TORN.CAB.HUECA
26	4274520M1	◀▶ 1220 MM +	**1**	CABLE	CABLE CAVO	KABEL CABLE

Batteries And Cables
Batterie Et Cables
Batterie Und Kabel
Batteria A Cavo
Batterie Y Cable

10-160

Without Battery Cut-Off With Positive Connection
Sans Coupe Batterie Avec Borne Positive
Ohne Unterbrecher Mit Doppelnippel
Sin Ruttore Con Morsetto
Senza Ruptor Con Conector

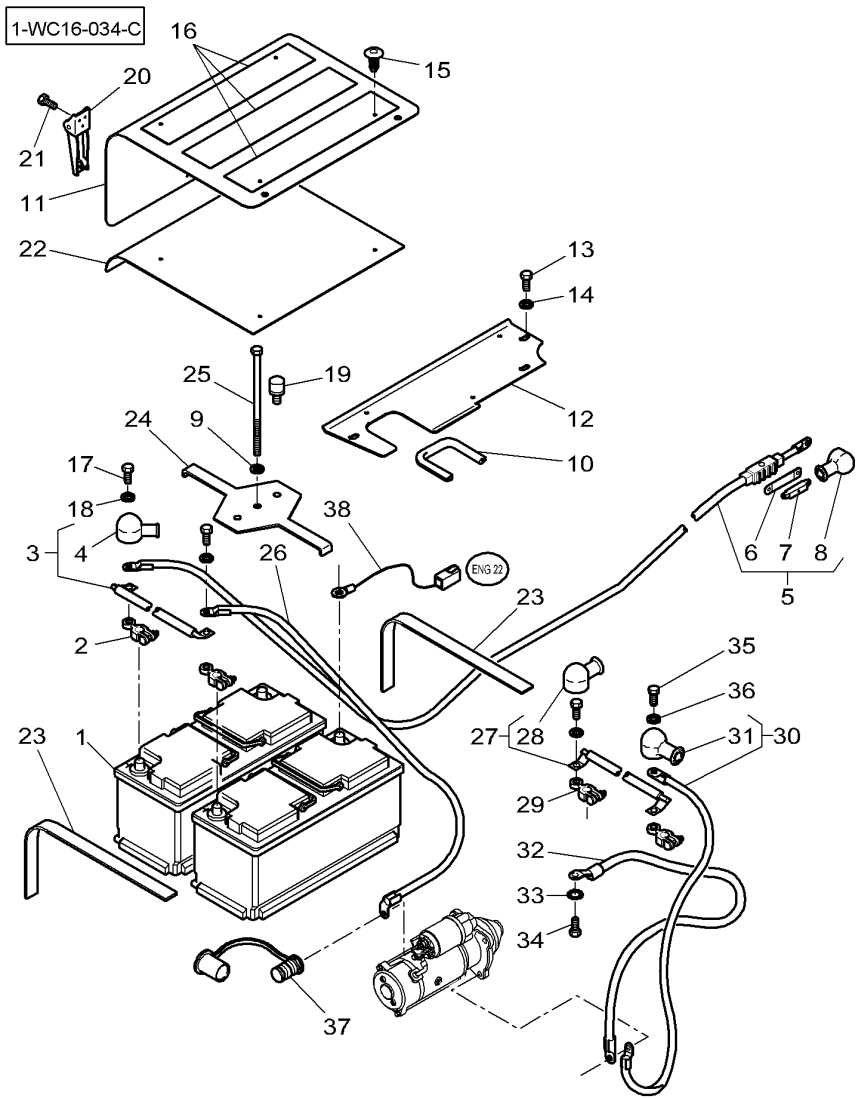

27	4274518M1	◀▶ 190 MM	**1**	CABLE	CABLE CAVO	KABEL CABLE
28	3784666M1	27	**2**	HELMET	CAPUCHON CASCO	SCHUTZHELM CASCO
29	4276409M1	-	**2**	CONNECTOR	BORNE. MORSETTO.	DOPPELNIPPEL CONECTOR
30	4275488M2		**1**	CABLE	CABLE CAVO	KABEL CABLE
31	3784666M1	30	**1**	HELMET	CAPUCHON CASCO	SCHUTZHELM CASCO
32	3788045M1	◀▶ 750 MM	**1**	CABLE	CABLE CAVO	KABEL CABLE
33	3010604X1		**1**	TOOTH WASHER	RONDELLE DENTEE ROSETTA DENTATA	ZAHNSCHEIBE ARANDELA ESTRELL
34	3009491X1	M10 X 20	**1**	HEX. SOCK. SCREW	VIS TETE HEX VITE PARKER	ZYLINDERSCHRAUBE TORN.CAB.HUECA
35	339124X1	M8 X 16	**2**	HEX. SOCK. SCREW	VIS TETE HEX VITE PARKER	ZYLINDERSCHRAUBE TORN.CAB.HUECA
36	390972X1	∅ 8-17 X 1,7	**2**	FLAT WASHER	RONDELLE PLATE RONDELLE PIANA	UNTERLEGSCHEIBEN ARANDELA PLANA
37	5015252M1		**1**	CONNECTOR	BORNE. MORSETTO.	DOPPELNIPPEL CONECTOR
38	4276513M2	◀▶ 1800 MM	**1**	HARNESS	FAISCEAU FASCIOCAVI	KABELBAUM MAZO CABLES

[A] PLEASE REFER TO MARKETING CATALOG
CONSULTER LE CATALOGUE MARKETING
DEN MARKETINGSKATALOG ZU KONSULTIEREN
CONSULTAR IL CATALOGO MARKETING
CONSULTAR EL CATALOGO MARKETING

[B] THE APPROPRIATE SAFETY DECALS MUST BE ORDERED AND FITTED TO THIS PART
CETTE PIECE DOIT ETRE IMPERATIVEMENT COMMANDEE AVEC SA DECALCOMANIE DE SECURITE
DIESES TEIL MUSS UNBEDINGT ZUSAMMEN MIT DEM SICHER HEITSHINWEISSCHILD BESTELLT WERDEN
QUESTA PARTE DEVE ESSERE IMPERATIVAMENTO COMANDATA CON LA SUA DECALCOMANIA SICUREZZA
ESTA PARTE DEBE ENCARGARSE IMPERATIVAMENTE CON SU CALCOMANIA DE SEGURIDAD

Batteries And Cables
Batterie Et Cables
Batterie Und Kabel
Batteria A Cavo
Batterie Y Cable

10-165

With Battery Cut-Off
Avec Coupe Batterie
Mit Unterbrecher
Con Ruttore
Con Ruptor

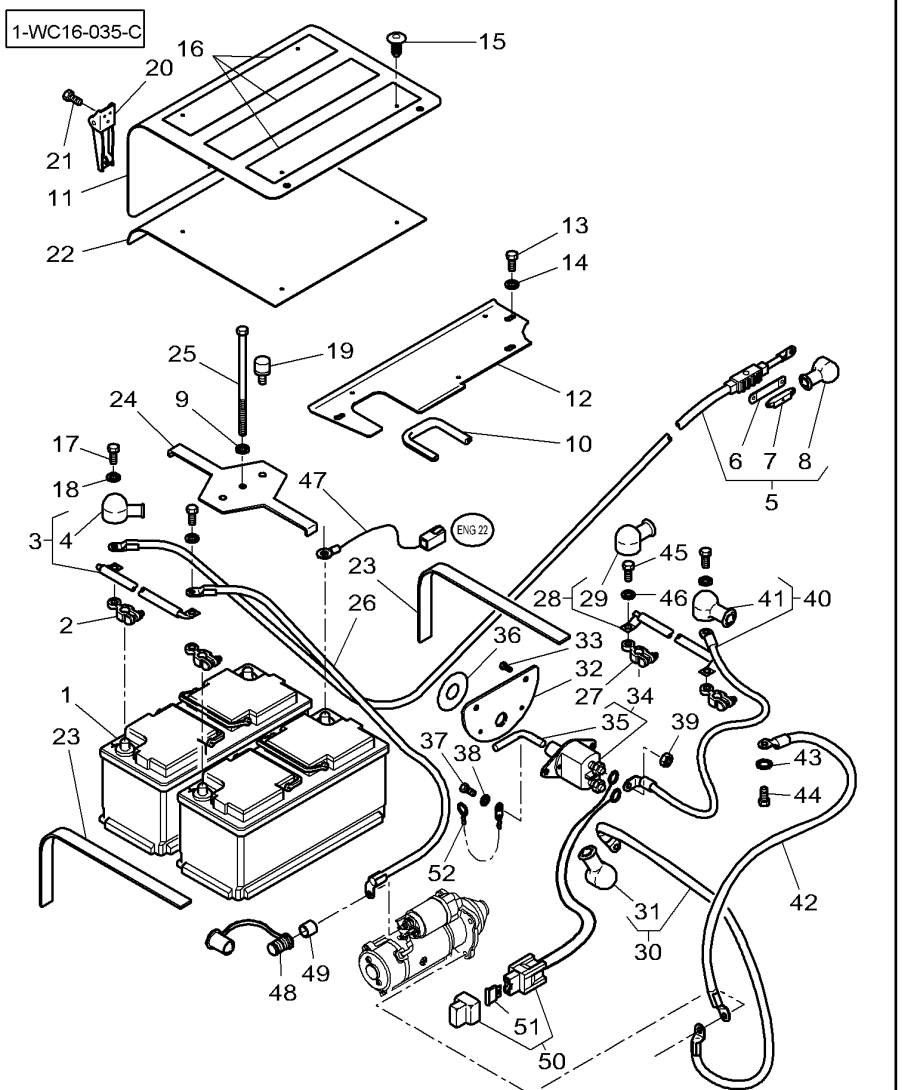

1		[AB]	**2**	BATTERY	BATTERIE BATTERIA	BATTERIE BATERIA
2	4276408M1	+	**2**	CONNECTOR	BORNE. MORSETTO.	DOPPELNIPPEL CONECTOR
3	4274946M1	◄► 190 MM +	**1**	CABLE	CABLE CAVO	KABEL CABLE
4	3784666M1	3 ➡▮ P311010	**2**	HELMET	CAPUCHON CASCO	SCHUTZHELM CASCO
5	4274519M3	◄► 1870 MM +	**1**	CABLE	CABLE CAVO	KABEL CABLE
6	**4276186M1**	5 150 AMP	**1**	FUSE	FUSIBLE FUSIBILE	SICHERUNG FUSIBLE
7	*3789733M2	5	**1**	CASE ASSY	BOITIER CARCASSA COMPLET	GEHAEUSE KPL CAJA COMPLETA
8	3784666M1	5	**1**	HELMET	CAPUCHON CASCO	SCHUTZHELM CASCO
9	390597X1	∅ 10-30 X 2,5	**1**	FLAT WASHER	RONDELLE PLATE RONDELLE PIANA	UNTERLEGSCHEIBEN ARANDELA PLANA
10	3784893M1	◄► 204 MM	**1**	GASKET	JOINT GIUNTO PIANO	FLACHDICHTUNG JUNTA PLANA
11	4278304M3		**1**	COVER	COUVERCLE COPERCHIO	ABDECKUNG. CUBIERTA
12	4278305M2		**1**	BRIDLE	BRIDE BRIGLIA	LASCHENSPANNBAND BRIDA
13	339124X1	M8 X 16	**4**	HEX. SOCK. SCREW	VIS TETE HEX VITE PARKER	ZYLINDERSCHRAUBE TORN.CAB.HUECA
14	390972X1	∅ 8-17 X 1,7	**4**	FLAT WASHER	RONDELLE PLATE RONDELLE PIANA	UNTERLEGSCHEIBEN ARANDELA PLANA
15	4275057M1		**4**	BUTTON	BOUTON BOTTONE	KNOPFTASTE BOTON
16	4280036M1	370 X 70	**3**	RUBBER STRAP	BANDE CAOUTCHOUC NASTRO IN GOMMA	GUMMIBAND BANDA DE GOMA
17	1440433X1	M10 X 16	**2**	HEX. SOCK. SCREW	VIS TETE HEX VITE PARKER	ZYLINDERSCHRAUBE TORN.CAB.HUECA
18	390734X1	∅ 10-21 X 2	**2**	FLAT WASHER	RONDELLE PLATE RONDELLE PIANA	UNTERLEGSCHEIBEN ARANDELA PLANA
19	4278306M1		**2**	SHOCK ABSORBER	AMORTISSEUR CHOC AMMORTIZZATORE	STOSSDAEMPFER AMORTIGUADOR
20	4278351M1		**1**	TIE	ATTACHE TRAVERSA ATTACCO	ANBINDUNG BARRA DE ENLACE
21	*3008179X1	M4 X 10	**3**	SCREW	VIS VITE	SCHRAUBE TORNILLO
22	4278782M3		**1**	SOUND REDUCTION	INSONORISATION INSONORIZZANTE	SCHALLDAEMMUNG REDUCTOR SONIDO
23	4278758M1		**1**	GASKET	JOINT GIUNTO PIANO	FLACHDICHTUNG JUNTA PLANA
24	4275106M2		**1**	BRIDLE	BRIDE BRIGLIA	LASCHENSPANNBAND BRIDA
25	392882X1	M10 X 240	**1**	HEX. SOCK. SCREW	VIS TETE HEX VITE PARKER	ZYLINDERSCHRAUBE TORN.CAB.HUECA
26	4274520M1	◄► 1220 MM +	**1**	CABLE	CABLE CAVO	KABEL CABLE

Batteries And Cables
Batterie Et Cables
Batterie Und Kabel
Batteria A Cavo
Batterie Y Cable

10-165

With Battery Cut-Off
Avec Coupe Batterie
Mit Unterbrecher
Con Ruttore
Con Ruptor

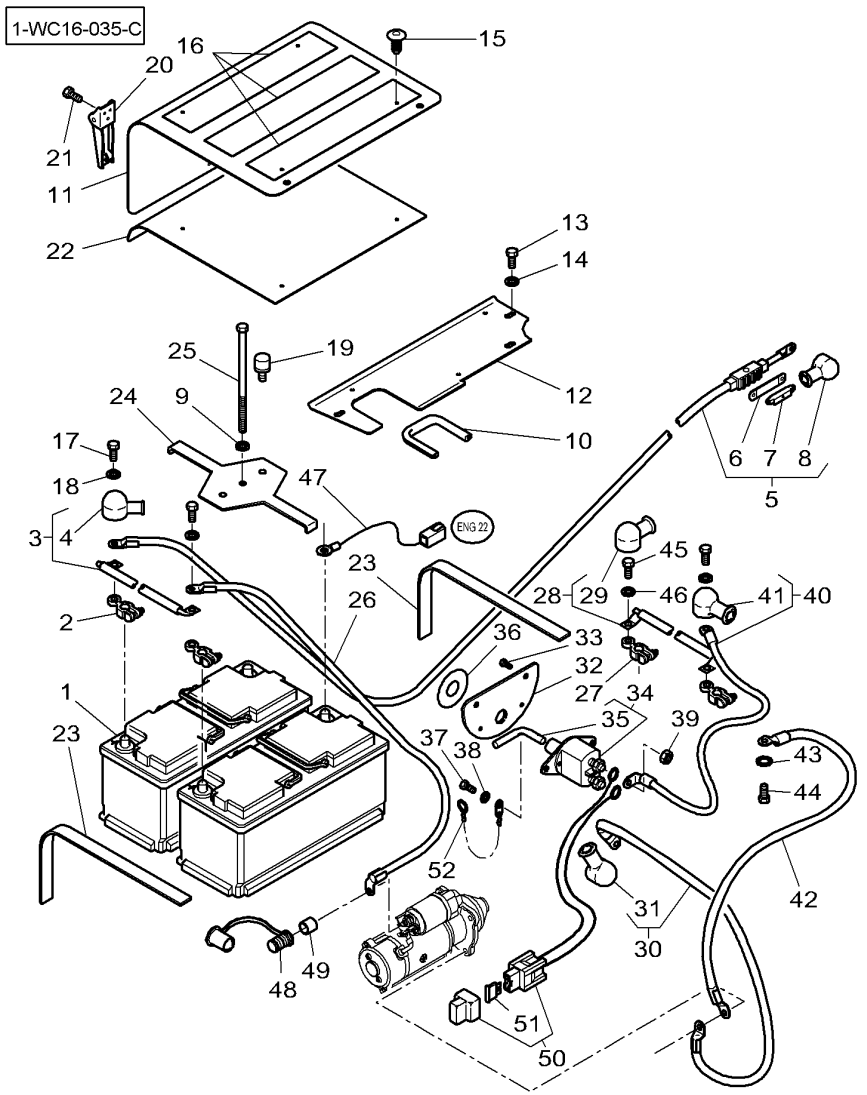

27	4276409M1	-	**2**	CONNECTOR	BORNE. MORSETTO.	DOPPELNIPPEL CONECTOR
28	4274518M1	◀▶ 190 MM -	**1**	CABLE	CABLE CAVO	KABEL CABLE
29	3784666M1	28	**2**	HELMET	CAPUCHON CASCO	SCHUTZHELM CASCO
30	4275544M1	◀▶ 1400 MM -	**1**	CABLE	CABLE CAVO	KABEL CABLE
31	3784666M1	30	**1**	HELMET	CAPUCHON CASCO	SCHUTZHELM CASCO
32	4275007M1		**1**	SUPPORT	SUPPORT SOPPORTO	TRAGER SOPORTE
33	339123X1	M8 X 20	**2**	HEX. SOCK. SCREW	VIS TETE HEX VITE PARKER	ZYLINDERSCHRAUBE TORN.CAB.HUECA
34	3613598M91		**1**	BREAKER	COUPE BATTERIE RUTTORE	UNTERBRECHER RUPTOR
35*	3907425M1	34	**1**	LEVER	LEVIER LEVA	HEBEL PALANCA
36	3613600M1		**1**	DECAL	DECALCOMANIE DECALCOMANIA	AUFKLEBER CALCOMANIA
37	339666X1	M6 X 20	**2**	HEX. SOCK. SCREW	VIS TETE HEX VITE PARKER	ZYLINDERSCHRAUBE TORN.CAB.HUECA
38	390971X1	∅ 6-12 X 1,5	**2**	FLAT WASHER	RONDELLE PLATE RONDELLE PIANA	UNTERLEGSCHEIBEN ARANDELA PLANA
39	339030X1	M6	**2**	NUT	ECROU DADO	MUTTER TUERCA
40	4275771M1	◀▶ 1400 MM -	**1**	BATTERY CABLE	CABLE BATTERIE CAVO DE BATTERIA	BATTERIE KABEL CABLE DE BATERIA
41	3784666M1	40	**1**	HELMET	CAPUCHON CASCO	SCHUTZHELM CASCO
42	3788045M1	◀▶ 750 MM -	**1**	CABLE	CABLE CAVO	KABEL CABLE
43	3010604X1		**1**	TOOTH WASHER	RONDELLE DENTEE ROSETTA DENTATA	ZAHNSCHEIBE ARANDELA ESTRELL
44	3009491X1	M10 X 20	**1**	HEX. SOCK. SCREW	VIS TETE HEX VITE PARKER	ZYLINDERSCHRAUBE TORN.CAB.HUECA
45	339124X1	M8 X 16	**2**	HEX. SOCK. SCREW	VIS TETE HEX VITE PARKER	ZYLINDERSCHRAUBE TORN.CAB.HUECA
46	390972X1	∅ 8-17 X 1,7	**2**	FLAT WASHER	RONDELLE PLATE RONDELLE PIANA	UNTERLEGSCHEIBEN ARANDELA PLANA
47	4276513M2	◀▶ 1800 MM	**1**	HARNESS	FAISCEAU FASCIOCAVI	KABELBAUM MAZO CABLES
48	5015252M1	+	**1**	CONNECTOR	BORNE. MORSETTO.	DOPPELNIPPEL CONECTOR
49	3580856M1	∅ 10,5	**1**	SPACER	ENTRETOISE DISTANZIALE	ABSTANDSTUECK DISCO ESPACIADOR
50*	4279279M2	➡ R166075	**1**	WIRE	FIL FILO	DRAHT HILO
50*	4279279M2	➡ R185071 (US)	**1**	WIRE	FIL FILO	DRAHT HILO
51	**3580868M1**	50 3AMP.	**1**	FUSE	FUSIBLE FUSIBILE	SICHERUNG FUSIBLE

Batteries And Cables
Batterie Et Cables
Batterie Und Kabel
Batteria A Cavo
Batterie Y Cable

10-165

With Battery Cut-Off
Avec Coupe Batterie
Mit Unterbrecher
Con Ruttore
Con Ruptor

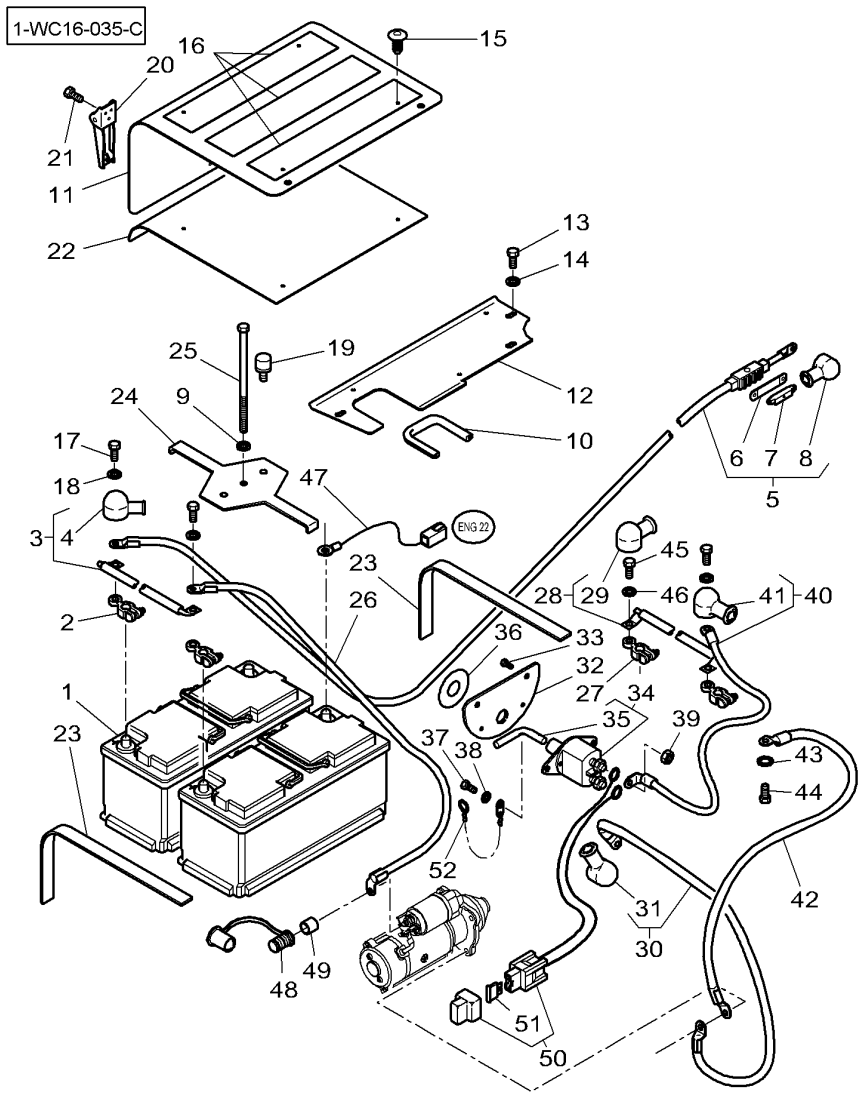

52	3613599M91	**1** CHAIN	CHAINE CATENA	KETTE CADENA

[A] PLEASE REFER TO MARKETING CATALOG
CONSULTER LE CATALOGUE MARKETING
DEN MARKETINGSKATALOG ZU KONSULTIEREN
CONSULTAR IL CATALOGO MARKETING
CONSULTAR EL CATALOGO MARKETING

[B] THE APPROPRIATE SAFETY DECALS MUST BE ORDERED AND FITTED TO THIS PART
CETTE PIECE DOIT ETRE IMPERATIVEMENT COMMANDEE AVEC SA DECALCOMANIE DE SECURITE
DIESES TEIL MUSS UNBEDINGT ZUSAMMEN MIT DEM SICHER HEITSHINWEISSCHILD BESTELLT WERDEN
QUESTA PARTE DEVE ESSERE IMPERATIVAMENTO COMANDATA CON LA SUA DECALCOMANIA SICUREZZA
ESTA PARTE DEBE ENCARGARSE IMPERATIVAMENTE CON SU CALCOMANIA DE SEGURIDAD

Cooling System	Air Conditioned Installation
Systeme De Refroidissement	Installation Air Conditionne
Kuehlsystem	Klimaanlage-Einbau
Sistema Raffreddamento	Installazione Aria Condizionata
Sistema De Refrigeracion	Instalacion Con Aire Acondicionad

10-170

1-WC08-023-B

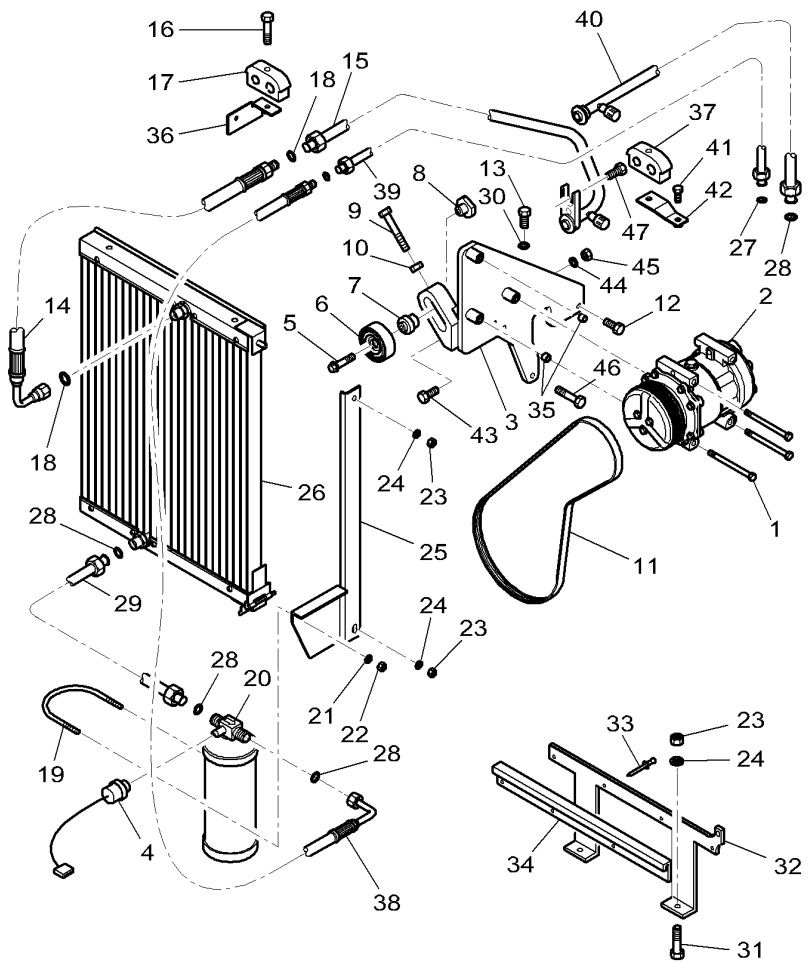

1	339557X1	M8 X 120	**3**	HEX. SOCK. SCREW	VIS TETE HEX VITE PARKER	ZYLINDERSCHRAUBE TORN.CAB.HUECA
2	3789035M1	👁 10-175 No 1	**1**	COMPRESSOR	COMPRESSEUR COMPRESSORE	KOMPRESSOR COMPRESOR
3*	4279847M5		**1**	SUPPORT	SUPPORT SOPPORTO	TRAGER SOPORTE
4	**3712526M1**	M8	**1**	PRESSURE SWITCH	MANO CONTACT PRESSOSTATO	DRUCKSCHALTER INTERRUP PRESION
5	3010239X1	M10 X 45	**1**	PLOUGH BOLT	VIS A EMBASE VITE TESTA TONDA	SENKSCHLOSSSCHRB TORNILLO ALOJ C
6	4270319M1		**1**	ROLLER ASSY	GALET ASSEMBLE RULLO COMPLETO	ROLLE KOMPL CJTO.DE RODILLO
7	4270055M3		**1**	BUSH	BAGUE BOCCOLA	RING CASQUILLO
8	4270054M1	M10	**1**	NUT SPECIAL	ECROU SPECIAL DADO SPECIALE	SPEZIALMUTTER TUERCA ESPECIAL
9	390122X1	M10 X 80	**1**	HEX. SOCK. SCREW	VIS TETE HEX VITE PARKER	ZYLINDERSCHRAUBE TORN.CAB.HUECA
10	339402X1	M10	**1**	NUT SPECIAL	ECROU SPECIAL DADO SPECIALE	SPEZIALMUTTER TUERCA ESPECIAL
11	**4273269M1**	◀▶ 1150 MM ⇨ 4276375M1	**1**	BELT	COURROIE CINGHIA	RIEMEN CORREA
12			**X**	NOT USED	NON UTILISE INUSATO	NICHT VERWENDET NO SE USA
13	339761X1	M8 X 25	**2**	HEX. SOCK. SCREW	VIS TETE HEX VITE PARKER	ZYLINDERSCHRAUBE TORN.CAB.HUECA
14	4278051M1	◀▶ 1200 MM	**1**	HYDR. HOSE	FLEXIBLE TUBOFLEX IDRAUL	HYDR. SCHLAUCH TUBO HIDRAULICO
15	4278053M1		**1**	TUBE	TUBE TUBO.	ROHR TUBO.
16	339011X1	M8 X 45	**1**	HEX. SOCK. SCREW	VIS TETE HEX VITE PARKER	ZYLINDERSCHRAUBE TORN.CAB.HUECA
16	339010X1	M8 X 40	**3**	HEX. SOCK. SCREW	VIS TETE HEX VITE PARKER	ZYLINDERSCHRAUBE TORN.CAB.HUECA
17	3784654M1	∅ 10 / 12	**1**	BRIDLE	BRIDE BRIGLIA	LASCHENSPANNBAND BRIDA
18	3010472X1	∅ 10,82 MM	**2**	O RING	JOINT TORIQUE GIUNTO DI TENUTA	O-RING JUNTA TOROIDAL
19	3383977M1		**1**	STIRRUP	ETRIER STAFFA	BUEGEL FUACION
20*	**3712495M1**	⇔ 3712495M1	**1**	FILTER	FILTRE FILTRO	FILTER FILTRO
21	390971X1	∅ 6-12 X 1,5 MM	**2**	FLAT WASHER	RONDELLE PLATE RONDELLE PIANA	UNTERLEGSCHEIBEN ARANDELA PLANA
22	339030X1	M6	**2**	NUT	ECROU DADO	MUTTER TUERCA
23	339169X1	M8	**3**	NUT	ECROU DADO	MUTTER TUERCA
24	390972X1	∅ 8-17 X 1,7	**4**	FLAT WASHER	RONDELLE PLATE RONDELLE PIANA	UNTERLEGSCHEIBEN ARANDELA PLANA
25	3785878M3		**1**	SUPPORT	SUPPORT SOPPORTO	TRAGER SOPORTE

Cooling System	Air Conditioned Installation
Systeme De Refroidissement	Installation Air Conditionne
Kuehlsystem	Klimaanlage-Einbau
Sistema Raffreddamento	Installazione Aria Condizionata
Sistema De Refrigeracion	Instalacion Con Aire Acondicionad

10-170

1-WC08-023-B

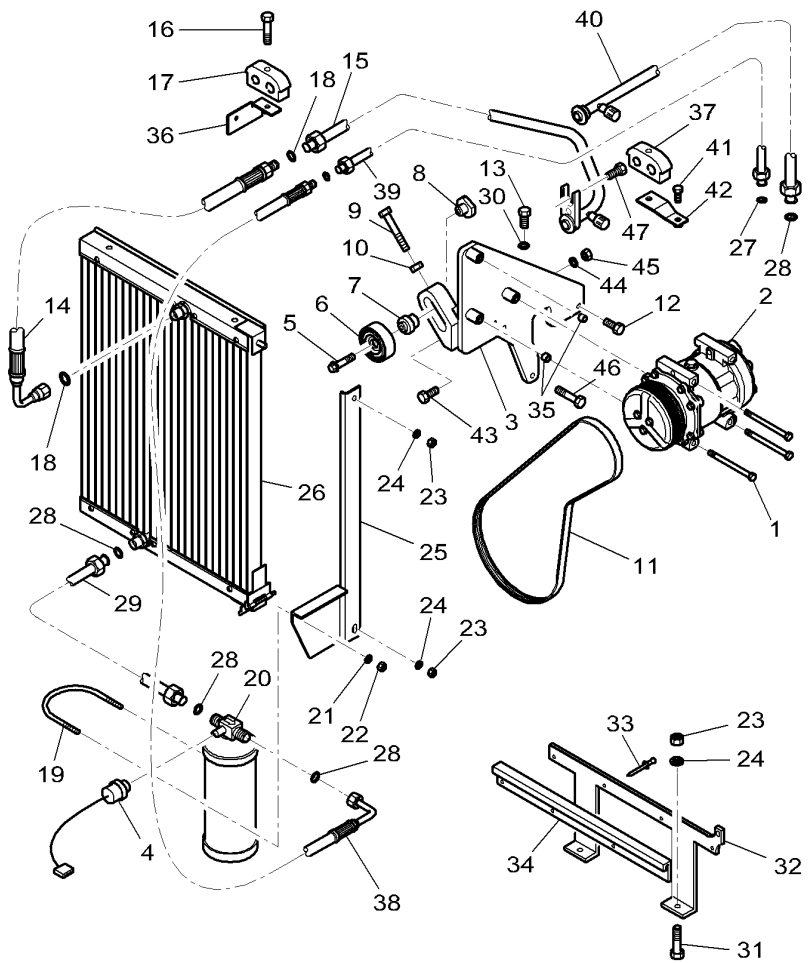

26	3785702M1		**1**	CONDENSER	CONDENSEUR CONDENSATORE.	VERDICHTER CONDENSADOR.
27	3010473X1	∅ 14 MM	**1**	O RING	JOINT TORIQUE GIUNTO DI TENUTA	O-RING JUNTA TOROIDAL
28	**3010471X1**	∅ 7,65 MM	**4**	O RING	JOINT TORIQUE GIUNTO DI TENUTA	O-RING JUNTA TOROIDAL
29	3787886M1		**1**	TUBE	TUBE TUBO.	ROHR TUBO.
30	390972X1			FLAT WASHER	RONDELLE PLATE RONDELLE PIANA	UNTERLEGSCHEIBEN ARANDELA PLANA
31	339123X1	M8 X 20	**2**	HEX. SOCK. SCREW	VIS TETE HEX VITE PARKER	ZYLINDERSCHRAUBE TORN.CAB.HUECA
32	4276222M3		**1**	PLATE	PLAQUE PIASTRA	PLATTE PLATO
33	3010021X1		**4**	RIVET	RIVET RIVETTO	NIET REMACHE
34	3787634M1		**1**	SUPPORT	SUPPORT SOPPORTO	TRAGER SOPORTE
35	4275108M1	∅ 11 X 8	**2**	PIN	GOUPILLE COPPIGLIA	STIFT PASADOR
36	4280067M2		**1**	SUPPORT	SUPPORT SOPPORTO	TRAGER SOPORTE
37	3789315M1	∅ 10 / 16	**3**	BRIDLE	BRIDE BRIGLIA	LASCHENSPANNBAND BRIDA
38	4278055M1	◄► 1300 MM	**1**	HYDR. HOSE	FLEXIBLE TUBOFLEX IDRAUL	HYDR. SCHLAUCH TUBO HIDRAULICO
39*	4278221M4		**1**	TUBE	TUBE TUBO.	ROHR TUBO.
40*	4278054M4		**1**	TUBE	TUBE TUBO.	ROHR TUBO.
41	339124X1	M8 X 16	**2**	HEX. SOCK. SCREW	VIS TETE HEX VITE PARKER	ZYLINDERSCHRAUBE TORN.CAB.HUECA
42	4280010M1		**2**	SUPPORT	SUPPORT SOPPORTO	TRAGER SOPORTE
43	3009496X1	M10 X 45	**1**	HEX. SOCK. SCREW	VIS TETE HEX VITE PARKER	ZYLINDERSCHRAUBE TORN.CAB.HUECA
44	385362X1		**1**	WASHER	RONDELLE RONDELLA	SCHEIBE ARANDELA
45*	339402X1	M10	**1**	NUT SPECIAL	ECROU SPECIAL DADO SPECIALE	SPEZIALMUTTER TUERCA ESPECIAL
46	3015258X1	M8 x 95	**1**	HEX. SOCK. SCREW	VIS TETE HEX VITE PARKER	ZYLINDERSCHRAUBE TORN.CAB.HUECA
47*	358139X1	3/8-24X25	**1**	SCREW	VIS VITE	SCHRAUBE TORNILLO

Compresser
Compresseur
Kompressor
Compressore
Compresor

10-175

1-WC49-001-A

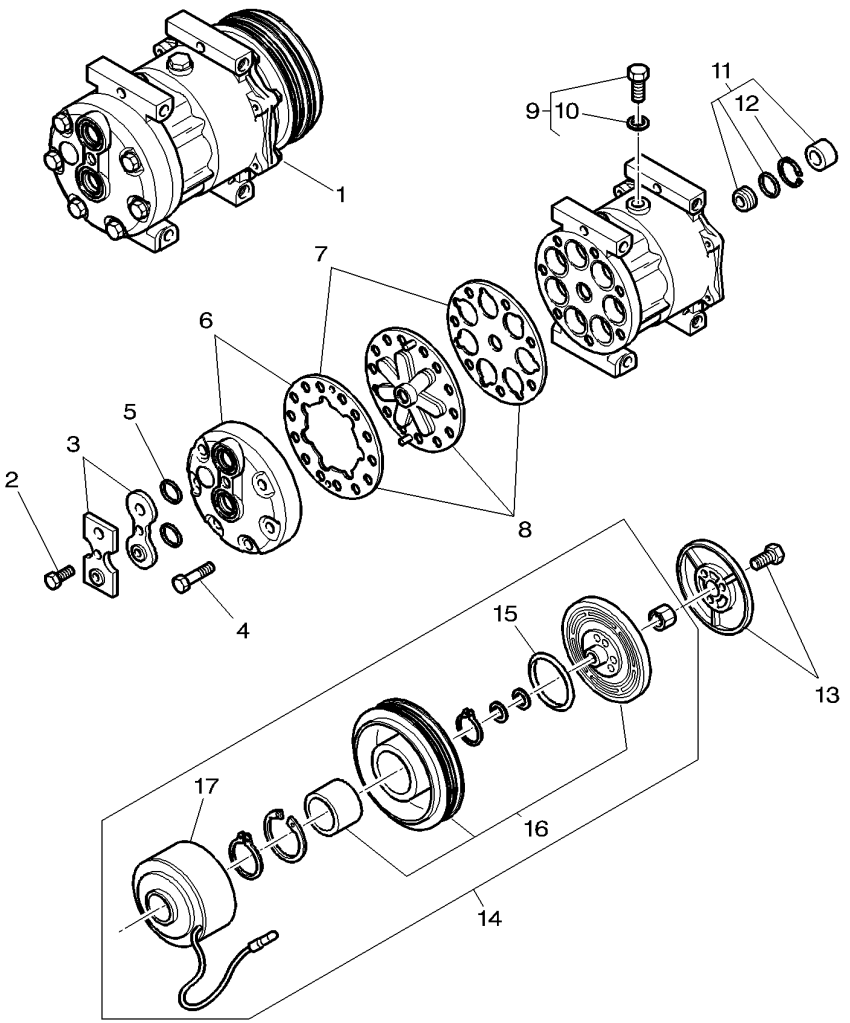

1	3789035M1		**1**	COMPRESSOR	COMPRESSEUR COMPRESSORE	KOMPRESSOR COMPRESOR
2	3901157M1	1	**1**	SCREW	VIS VITE	SCHRAUBE TORNILLO
3	3903258M91	1	**1**	KIT	JEU KIT	SATZ JUEGO
4	3901154M1	1	**1**	SCREW	VIS VITE	SCHRAUBE TORNILLO
5	3901155M1	1	**1**	O RING	JOINT TORIQUE GIUNTO DI TENUTA	O-RING JUNTA TOROIDAL
6	3901147M91	1	**1**	HEAD	TETE TESTA	KOPF CULATA
7	3903256M91	1	**1**	KIT, GASKET	JEU JOINTS PLATS KIT GIUNTO PIANO	FLACHDICHT. SATZ KIT JUNTA PLANA
8	3903255M91	1	**1**	KIT	JEU KIT	SATZ JUEGO
9	3901152M91	1	**1**	PLUG	BOUCHON TAPPO	STOPFEN TAPON
10	3901153M1	9	**1**	O RING	JOINT TORIQUE GIUNTO DI TENUTA	O-RING JUNTA TOROIDAL
11	3907059M91	1	**1**	KIT, JOINT	JEU JOINTS KIT GIUNTO	DICHTUNGSSATZ JUEGO JUNTAS
12	3907060M1	11	**1**	SNAPRING	SEGMENT ARRET ANELLO SIEGER	SPRENGRING ANILLA RETENCION
13	3903259M91	1	**1**	KIT	JEU KIT	SATZ JUEGO
14	3907061M91	1	**1**	CLUTCH	EMBRAYAGE FRIZIONE	SCHALTKUPPLUNG EMBRAGUE
15	3901162M1	14	**1**	COVER	COUVERCLE COPERCHIO	ABDECKUNG. CUBIERTA
16	3907062M91	14	**1**	ROTOR	ROTOR ROTORE	ROTOR ROTOR
17	3907063M91	14	**1**	COIL	BOBINE BOBINA	SPULE BOBINA

Cooling System	Engine
Systeme De Refroidissement	Moteur
Kuehlung	Motor
Sistema Di Raffreddamento	Motore
Sistema Refrigeracion	Motor

10-180

1-WC23-034-A

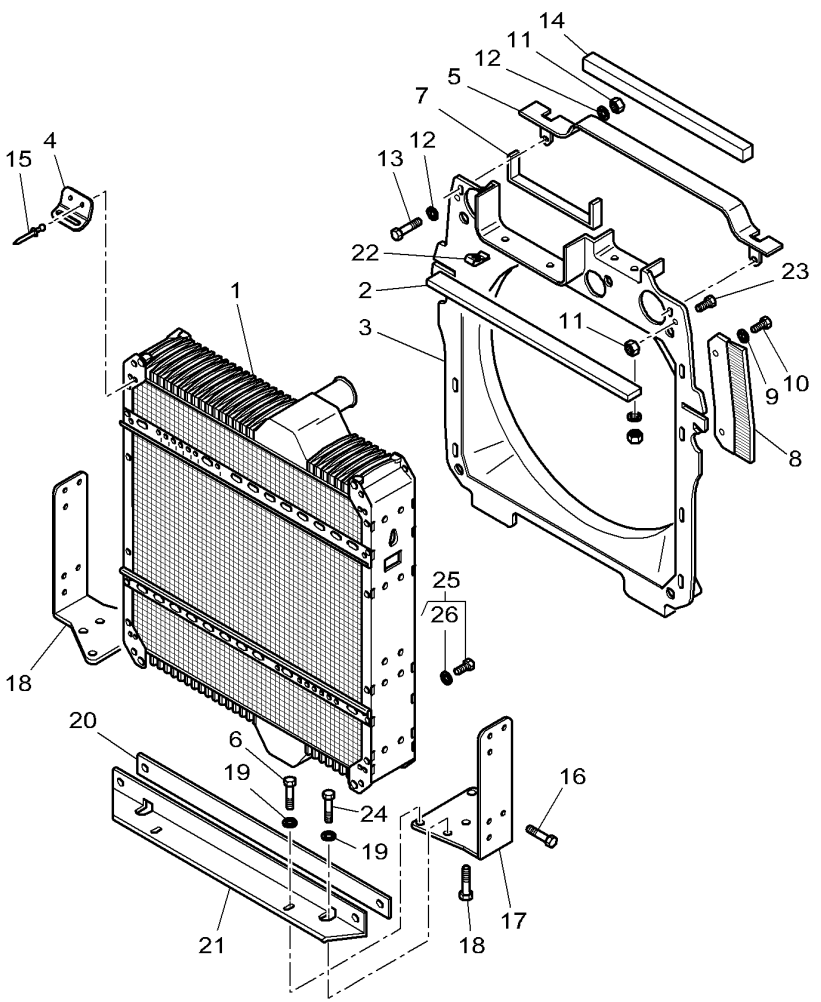

1	3788381M2	[A]	**1**	WATER COOLER	RADIATEUR EAU RADIATORE ACQUA	WASSERKUEHLER REFRIG DE AGUA
2	72504363	12 X 25 X 610	**2**	FOAM	MOUSSE GOMMAPIUMA	SCHAUMSTOFF ESPUMA
3*	4277202M3		**1**	SHROUD	BUSE VELO	UMMANTELUNG BOVEDA
4	3789249M1		**2**	ANGLE.	EQUERRE. ANGOLO	WINKEL ANGULO
5	3785976M3		**1**	SUPPORT	SUPPORT SOPPORTO	TRAGER SOPORTE
6	3009506X1	M12 X 30	**4**	HEX. SOCK. SCREW	VIS TETE HEX VITE PARKER	ZYLINDERSCHRAUBE TORN.CAB.HUECA
7	3712224M1	30 X 30 X 545	**1**	GASKET	JOINT GIUNTO PIANO	FLACHDICHTUNG JUNTA PLANA
8	3783099M4	▶	**1**	GASKET	JOINT GIUNTO PIANO	FLACHDICHTUNG JUNTA PLANA
8	3783100M4	◀	**1**	GASKET	JOINT GIUNTO PIANO	FLACHDICHTUNG JUNTA PLANA
9	390972X1	∅ 8-17 X 1,7	**8**	FLAT WASHER	RONDELLE PLATE RONDELLE PIANA	UNTERLEGSCHEIBEN ARANDELA PLANA
10	339124X1	M8 X 16	**8**	HEX. SOCK. SCREW	VIS TETE HEX VITE PARKER	ZYLINDERSCHRAUBE TORN.CAB.HUECA
11	339169X1	M8	**4**	NUT	ECROU DADO	MUTTER TUERCA
12	390972X1	∅ 8-17 X 1,7	**4**	FLAT WASHER	RONDELLE PLATE RONDELLE PIANA	UNTERLEGSCHEIBEN ARANDELA PLANA
13	339761X1	M8 X 25	**2**	HEX. SOCK. SCREW	VIS TETE HEX VITE PARKER	ZYLINDERSCHRAUBE TORN.CAB.HUECA
14	3783670M2	16 X 50 X 750 MM	**1**	GASKET	JOINT GIUNTO PIANO	FLACHDICHTUNG JUNTA PLANA
14	3389703M1	38 X 38 X 160 MM	**1**	SKATE	PATIN PATTINO	SCHLITTEN-KUFE PATIN
15	3010021X1	∅ 4.8 x 9	**4**	RIVET	RIVET RIVETTO	NIET REMACHE
16	339123X1	M8 X 20	**8**	HEX. SOCK. SCREW	VIS TETE HEX VITE PARKER	ZYLINDERSCHRAUBE TORN.CAB.HUECA
17	3781911M1	◀	**1**	SUPPORT	SUPPORT SOPPORTO	TRAGER SOPORTE
18	3781621M1	▶	**1**	SUPPORT	SUPPORT SOPPORTO	TRAGER SOPORTE
19	390735X1	∅ 12-24 X 2,5	**6**	FLAT WASHER	RONDELLE PLATE RONDELLE PIANA	UNTERLEGSCHEIBEN ARANDELA PLANA
20	3783101M1	◀▶ 745 MM	**1**	GASKET	JOINT GIUNTO PIANO	FLACHDICHTUNG JUNTA PLANA
21	3783046M1		**1**	SUPPORT	SUPPORT SOPPORTO	TRAGER SOPORTE
22	3010070X1	M6	**2**	SPRING NUT	ECROU RESSORT SPRING NUT	FEDERMUTTER TUERCA RESORTE
23	339123X1	M8 X 20	**2**	HEX. SOCK. SCREW	VIS TETE HEX VITE PARKER	ZYLINDERSCHRAUBE TORN.CAB.HUECA
24	3009505X1	M12 X 25	**2**	HEX. SOCK. SCREW	VIS TETE HEX VITE PARKER	ZYLINDERSCHRAUBE TORN.CAB.HUECA

Cooling System Systeme De Refroidissement Kuehlung Sistema Di Raffreddamento Sistema Refrigeracion	Engine Moteur Motor Motore Motor	10-180	

1-WC23-034-A

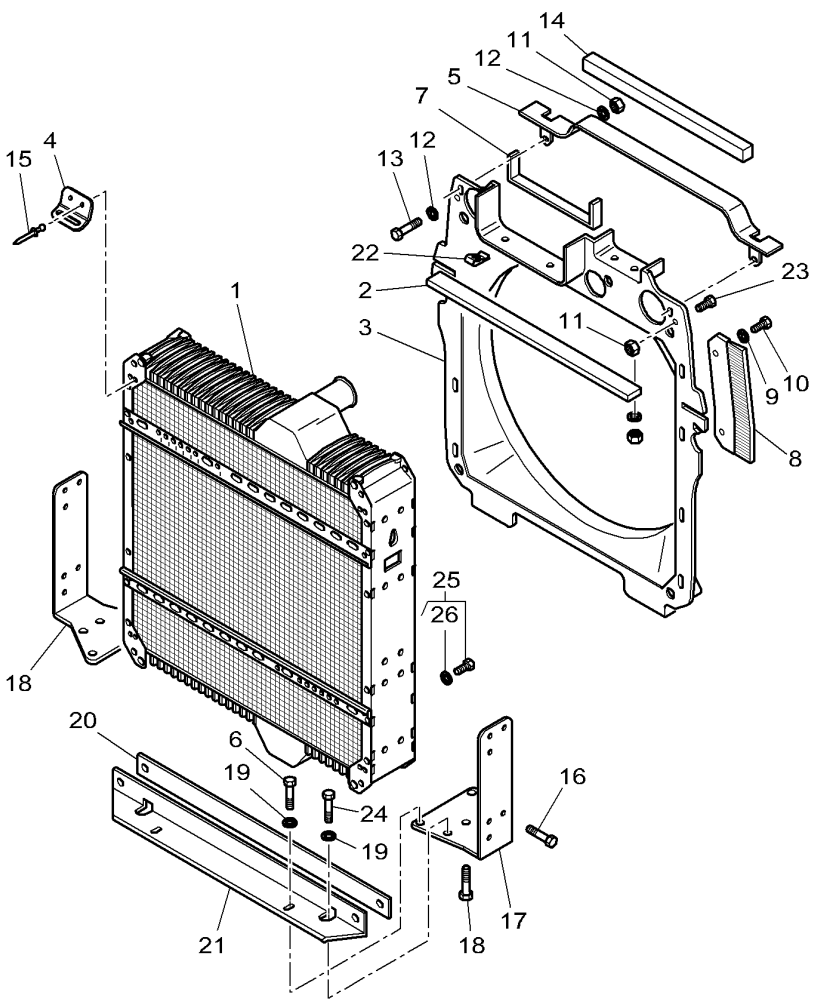

25	358724X91	3/4-16	**1**	PLUG	BOUCHON TAPPO	STOPFEN TAPON
26	831497M1	25	**1**	O RING	JOINT TORIQUE GIUNTO DI TENUTA	O-RING JUNTA TOROIDAL

[A] THE APPROPRIATE SAFETY DECALS MUST BE ORDERED AND FITTED TO THIS PART
CETTE PIECE DOIT ETRE IMPERATIVEMENT COMMANDEE AVEC SA DECALCOMANIE DE SECURITE
DIESES TEIL MUSS UNBEDINGT ZUSAMMEN MIT DEM SICHER HEITSHINWEISSCHILD BESTELLT WERDEN
QUESTA PARTE DEVE ESSERE IMPERATIVAMENTO COMANDATA CON LA SUA DECALCOMANIA SICUREZZA
ESTA PARTE DEBE ENCARGARSE IMPERATIVAMENTE CON SU CALCOMANIA DE SEGURIDAD

Cooling System	Engine
Systeme De Refroidissement	Moteur
Kuehlung	Motor
Sistema Di Raffreddamento	Motore
Sistema Refrigeracion	Motor

10-185

1-WC23-033-A

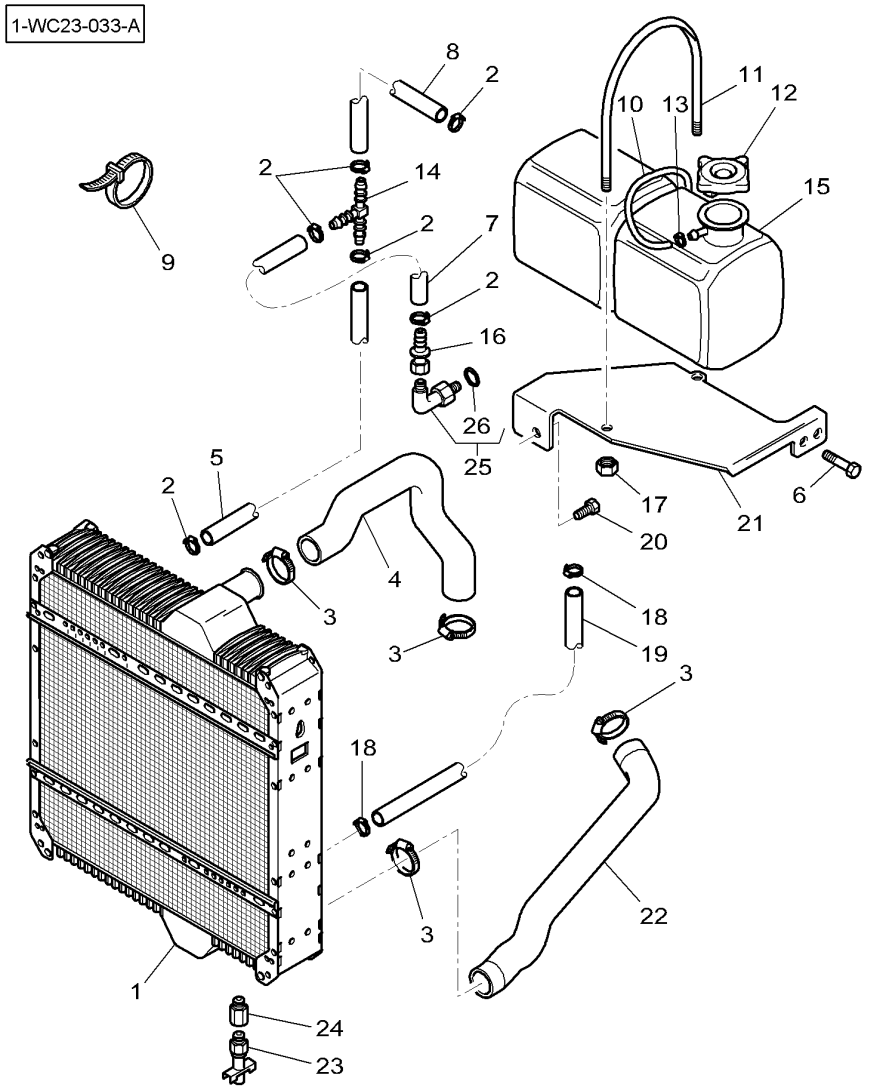

1	3788381M2	[A]	**1**	WATER COOLER	RADIATEUR EAU RADIATORE ACQUA	WASSERKUEHLER REFRIG DE AGUA
2	3000483X1	∅ 12-22	**6**	HOSE CLIP	COLLIER DURITE COLLARE DI TUBO	SCHLAUCHBINDER ABRAZADERA TUBO
3	338618X1	∅ 50-70	**4**	HOSE CLIP	COLLIER DURITE COLLARE DI TUBO	SCHLAUCHBINDER ABRAZADERA TUBO
4	4278281M1		**1**	HOSE	DURITE TUBO FLESSIBILE	SCHLAUCH TUBO DE GOMA
5	4278566M1	◀▶ 900 MM	**1**	HOSE	DURITE TUBO FLESSIBILE	SCHLAUCH TUBO DE GOMA
6	339124X1	M8 X 16	**2**	HEX. SOCK. SCREW	VIS TETE HEX VITE PARKER	ZYLINDERSCHRAUBE TORN.CAB.HUECA
7	3783573M1	◀▶ 650 MM	**1**	HYDR. HOSE	FLEXIBLE TUBOFLEX IDRAUL	HYDR. SCHLAUCH TUBO HIDRAULICO
8	**3713676M1**	◀▶ 400 MM	**1**	HOSE	DURITE TUBO FLESSIBILE	SCHLAUCH TUBO DE GOMA
9	3619622M1		**2**	CABLE TIE	ATTACHE CABLE FASCETTA CAVI	KABELBINDER APRIETACABLES
10	3583427M1		**1**	TUBE	TUBE TUBO.	ROHR TUBO.
11	4275245M1	M8	**1**	BRIDLE	BRIDE BRIGLIA	LASCHENSPANNBAND BRIDA
12	3787612M1		**1**	PLUG	BOUCHON TAPPO	STOPFEN TAPON
13	338612X1	∅ 10-16	**1**	HOSE CLIP	COLLIER DURITE COLLARE DI TUBO	SCHLAUCHBINDER ABRAZADERA TUBO
14	3779038M1		**1**	UNION	RACCORD RACCORDO	VERSCHRAUBUNG RACOR
15	4280681M1	[A]	**1**	TANK	RESERVOIR SERBATOIO	TANK DEPOSITO
16	4279936M1		**1**	UNION	RACCORD RACCORDO	VERSCHRAUBUNG RACOR
17	339169X1	M8	**2**	NUT	ECROU DADO	MUTTER TUERCA
18	338614X1	∅ 20-32	**2**	HOSE CLIP	COLLIER DURITE COLLARE DI TUBO	SCHLAUCHBINDER ABRAZADERA TUBO
19	4281373M1		**1**	HOSE	DURITE TUBO FLESSIBILE	SCHLAUCH TUBO DE GOMA
20	3009491X1	M10 X 20	**1**	HEX. SOCK. SCREW	VIS TETE HEX VITE PARKER	ZYLINDERSCHRAUBE TORN.CAB.HUECA
21	4274910M3		**1**	SUPPORT	SUPPORT SOPPORTO	TRAGER SOPORTE
22	5015117M1		**1**	HOSE	DURITE TUBO FLESSIBILE	SCHLAUCH TUBO DE GOMA
23	70229210		**1**	COCK	ROBINET RUBINETTO	ABSPERRHAHN AGUJA INDICADORA
24	5016190M1		**1**	ADAPTOR	ADAPTATEUR ADATTATORE	REDUZIERNIPPEL ADAPTADOR
25	3019302X91		**1**	ELBOW NIPPLE	RACCORD COUDE NIPPLO GOMITO	WINKELSTUTZEN CODO DE UNION
26	3019393X1	25	**1**	O RING	JOINT TORIQUE GIUNTO DI TENUTA	O-RING JUNTA TOROIDAL

Cooling System Systeme De Refroidissement Kuehlung Sistema Di Raffreddamento Sistema Refrigeracion	Engine Moteur Motor Motore Motor	10-185	

1-WC23-033-A

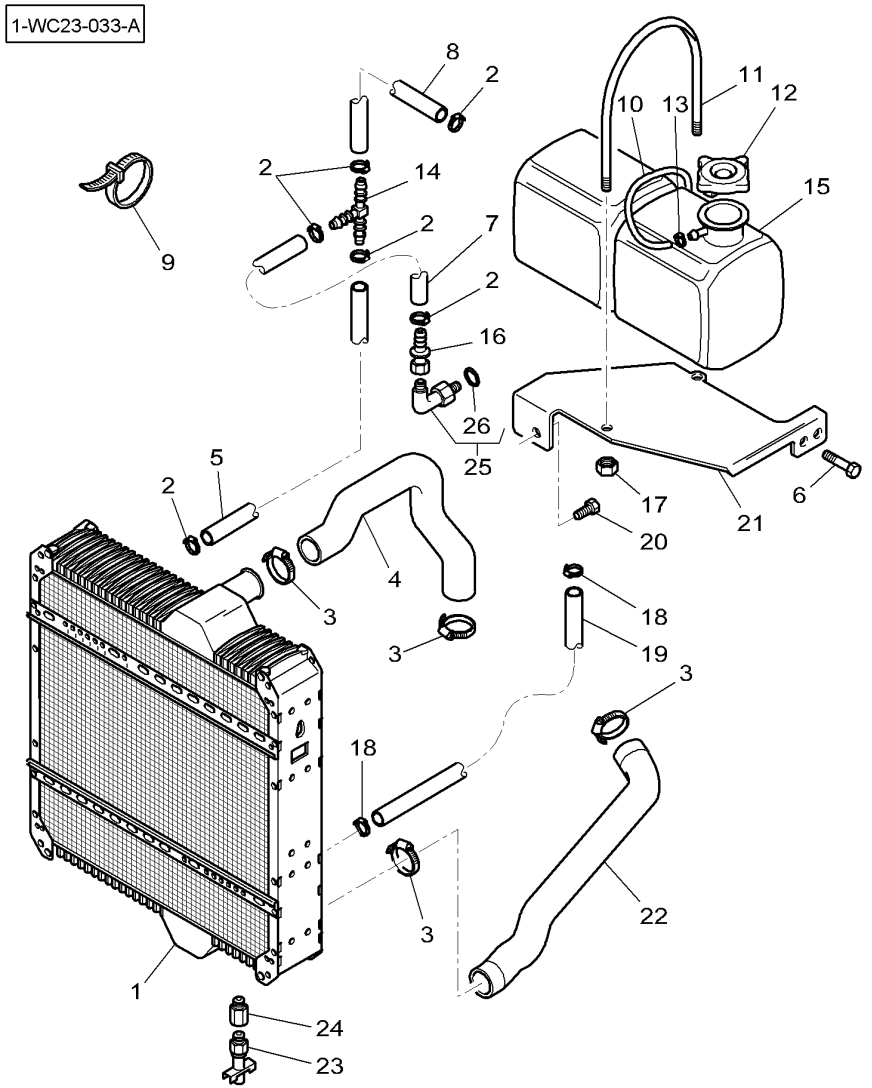

[A] THE APPROPRIATE SAFETY DECALS MUST BE ORDERED AND FITTED TO THIS PART
CETTE PIECE DOIT ETRE IMPERATIVEMENT COMMANDEE AVEC SA DECALCOMANIE DE SECURITE
DIESES TEIL MUSS UNBEDINGT ZUSAMMEN MIT DEM SICHER HEITSHINWEISSCHILD BESTELLT WERDEN
QUESTA PARTE DEVE ESSERE IMPERATIVAMENTO COMANDATA CON LA SUA DECALCOMANIA SICUREZZA
ESTA PARTE DEBE ENCARGARSE IMPERATIVAMENTE CON SU CALCOMANIA DE SEGURIDAD

Air Cooler
Refroidisseur D'Air
Luftkuehler
Raffreddamento D'Aria
Enfriador De Aire

10-190

1-WC65-002-B

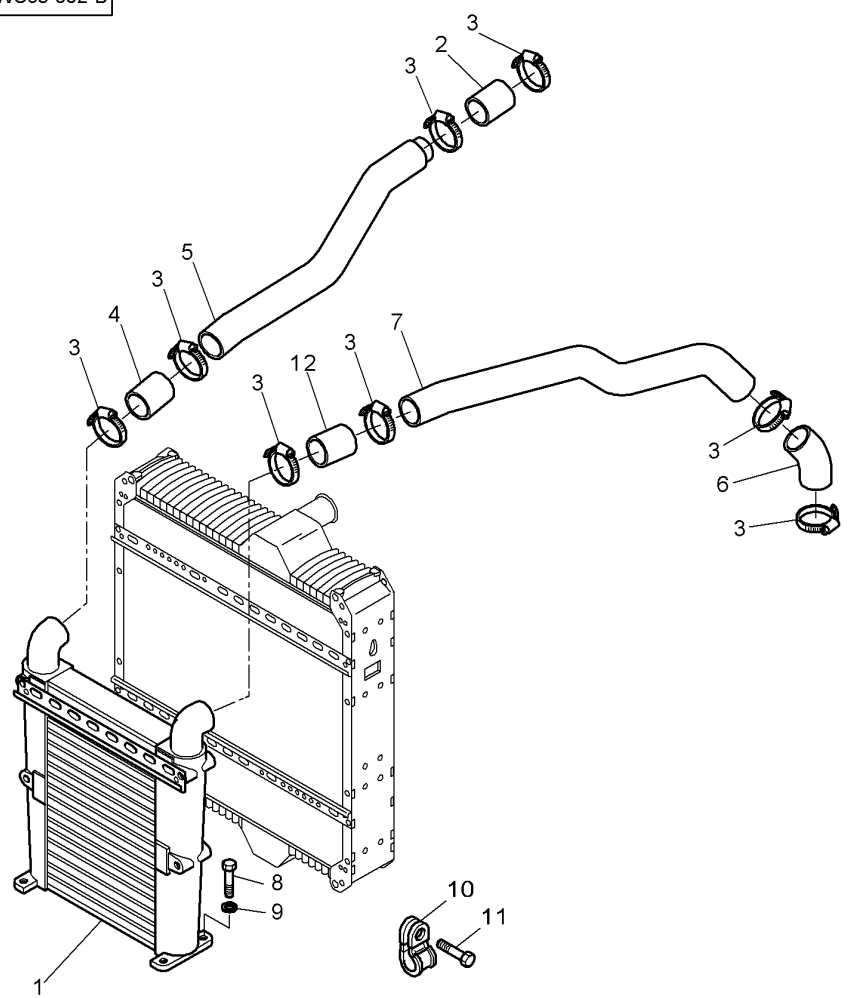

1	4276485M1		**1**	COOLER	REFROIDISSEUR REFRIGERATORE	KUEHLAGGREGAT ENFRIADOR
2*	3788617M1	MT655B-17-DEC-06 MT665B-11-DEC-06	**1**	HOSE	DURITE TUBO FLESSIBILE	SCHLAUCH TUBO DE GOMA
2*	4286065M1	MT655B-18-DEC-06 MT665B-12-DEC-06	**1**	HOSE	DURITE TUBO FLESSIBILE	SCHLAUCH TUBO DE GOMA
3	3010156X1	∅ 70-90	**8**	CLAMP	COLLIER FASCETTA	HALTESCHELLE ABRAZADERA
4	3784918M1		**1**	HOSE	DURITE TUBO FLESSIBILE	SCHLAUCH TUBO DE GOMA
5*	4276118M1	MT655B-17-DEC-06 MT665B-11-DEC-06	**1**	TUBE	TUBE TUBO.	ROHR TUBO.
5*	4285955M1	MT655B-18-DEC-06 MT665B-12-DEC-06	**1**	TUBE	TUBE TUBO.	ROHR TUBO.
6	3784918M1		**1**	HOSE	DURITE TUBO FLESSIBILE	SCHLAUCH TUBO DE GOMA
7	4276119M2		**1**	TUBE	TUBE TUBO.	ROHR TUBO.
8	339010X1	M8X40	**4**	HEX. SOCK. SCREW	VIS TETE HEX VITE PARKER	ZYLINDERSCHRAUBE TORN.CAB.HUECA
9	390972X1		**4**	FLAT WASHER	RONDELLE PLATE RONDELLE PIANA	UNTERLEGSCHEIBEN ARANDELA PLANA
10	3581507M1	∅ 18MM	**2**	CLIP	PATTE D'ATTACHE FERMAGLIO	SCHELLE CLIP
11	339761X1	M8 X 25	**2**	HEX. SOCK. SCREW	VIS TETE HEX VITE PARKER	ZYLINDERSCHRAUBE TORN.CAB.HUECA
12	3784918M1		**1**	HOSE	DURITE TUBO FLESSIBILE	SCHLAUCH TUBO DE GOMA

Air Filter	**Dry - Dual Element**	**10-195**	**Up To Mt655b 17-Dec-2006 / Mt665b 11-Dec-2006**
Filtre A Air	**Sec Deux Elements**		**Jusqu'Au Mt655b 17-Dec-2006 / Mt665b 11-Dec-2006**
Luftfilter	**Doppelter Trockenfiltereinsatz**		**Bis Mt655b 17-Dec-2006 / Mt665b 11-Dec-2006**
Filtro D'Aria	**Doppio Elemento**		**Fino Alla Mt655b 17-Dec-2006 / Mt665b 11-Dec-2006**
Filtro De Aire	**Elemento Doble Seco**		**Hasta Mt655b 17-Dec-2006 / Mt665b 11-Dec-2006**

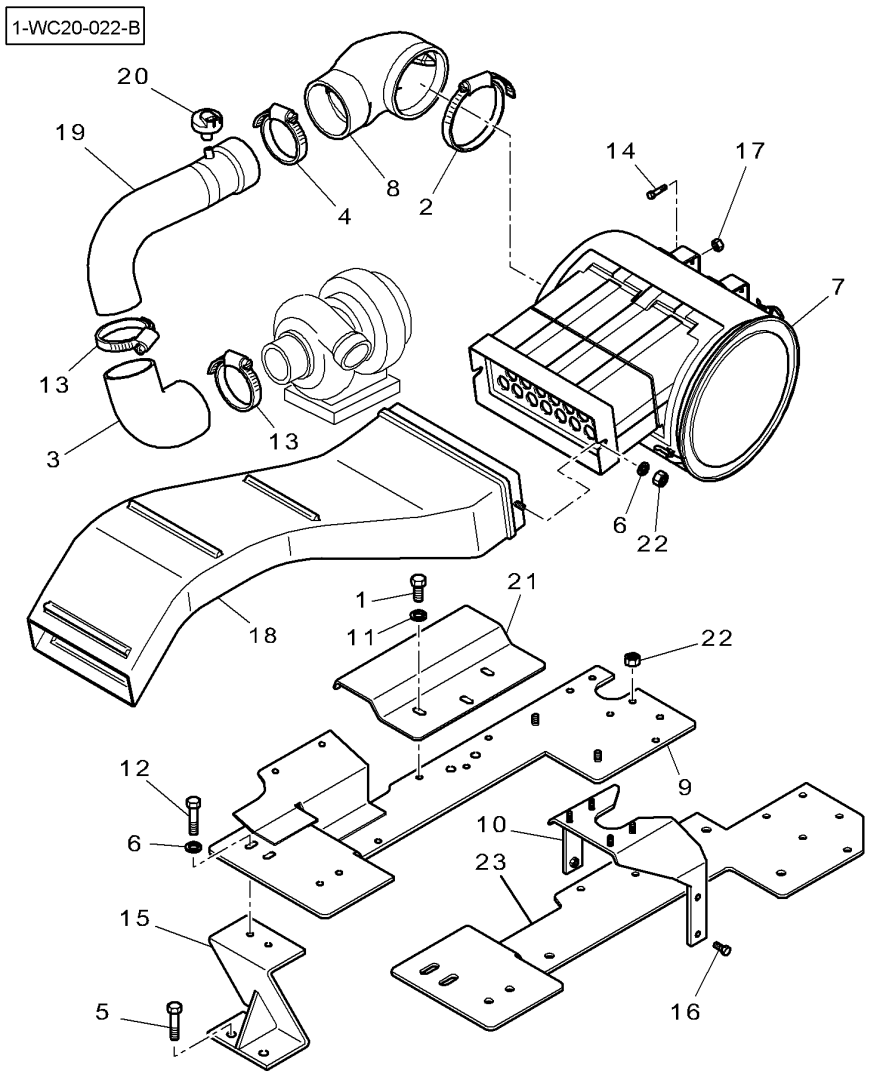

1	339123X1	M8 X 20	**3**	HEX. SOCK. SCREW	VIS TETE HEX VITE PARKER	ZYLINDERSCHRAUBE TORN.CAB.HUECA
2	3010162X1	∅ 130-155	**1**	CLAMP	COLLIER FASCETTA	HALTESCHELLE ABRAZADERA
3	4281086M1		**1**	HOSE	DURITE TUBO FLESSIBILE	SCHLAUCH TUBO DE GOMA
4	3010160X1	∅ 110-135	**1**	CLAMP	COLLIER FASCETTA	HALTESCHELLE ABRAZADERA
5	390419X1	M16 X 40	**2**	HEX. SOCK. SCREW	VIS TETE HEX VITE PARKER	ZYLINDERSCHRAUBE TORN.CAB.HUECA
6	390734X1		**4**	FLAT WASHER	RONDELLE PLATE RONDELLE PIANA	UNTERLEGSCHEIBEN ARANDELA PLANA
7	4278222M91	10-205 No 1	**1**	AIR FILTER	FILTRE A AIR FILTRO D'ARIA	LUFTFILTER FILTRO DE AIRE
8	3788163M1		**1**	TUBE	TUBE TUBO.	ROHR TUBO.
9	4277707M92	.....	**1**	SUPPORT	SUPPORT SOPPORTO	TRAGER SOPORTE
10	4280070M1	.....	**1**	SUPPORT	SUPPORT SOPPORTO	TRAGER SOPORTE
10*	4289116M2	.....	**1**	SUPPORT	SUPPORT SOPPORTO	TRAGER SOPORTE
11	390972X1		**3**	FLAT WASHER	RONDELLE PLATE RONDELLE PIANA	UNTERLEGSCHEIBEN ARANDELA PLANA
12	3009492X1	M10 X 25	**2**	HEX. SOCK. SCREW	VIS TETE HEX VITE PARKER	ZYLINDERSCHRAUBE TORN.CAB.HUECA
13	3010159X1		**3**	CLAMP	COLLIER FASCETTA	HALTESCHELLE ABRAZADERA
14	1440716X1	M12 X 30	**4**	HEX. SOCK. SCREW	VIS TETE HEX VITE PARKER	ZYLINDERSCHRAUBE TORN.CAB.HUECA
15*	4280072M3		**1**	SUPPORT	SUPPORT SOPPORTO	TRAGER SOPORTE
16	3009493X1	M10 X 30	**4**	HEX. SOCK. SCREW	VIS TETE HEX VITE PARKER	ZYLINDERSCHRAUBE TORN.CAB.HUECA
17	3009695X1	M12	**4**	NUT	ECROU DADO	MUTTER TUERCA
18	4278207M2		**1**	HOSE	DURITE TUBO FLESSIBILE	SCHLAUCH TUBO DE GOMA
19*	4281035M2		**1**	TUBE	TUBE TUBO.	ROHR TUBO.
20	4284917M1		**1**	VALVOMETER	DEPRESSIOMETRE VALVOMETRO	VAKUUMMETER DEPRESIOMETRO
21	4281344M1		**1**	COWL	GARANT CAPPOTTATURA	AUFSATZ CAPERUZA
22	339402X1	M10	**6**	NUT SPECIAL	ECROU SPECIAL DADO SPECIALE	SPEZIALMUTTER TUERCA ESPECIAL
23*	4289071M3	.....	**1**	PLATE	PLAQUE PIASTRA	PLATTE PLATO

Air Filter **Filtre A Air** **Luftfilter** **Filtro D'Aria** **Filtro De Aire**	**Dry - Dual Element** **Sec Deux Elements** **Doppelter Trockenfiltereinsatz** **Doppio Elemento** **Elemento Doble Seco**	**10-200**	**From Mt655b 18-Dec-2006 / Mt665b 12-Dec-2006** **A Partir De Mt655b 18-Dec-2006 / Mt665b 12-Dec- 2006** **Ab Mt655b 18-Dec-2006 / Mt665b 12-Dec-2006** **Dalla Mt655b 18 Dec-2006 / Mt665b 12-Dec-2006** **A Partir Del Mt655b 18-Dec-2006 / Mt665b 12-Dec- 2006**

1-WC20-030-A

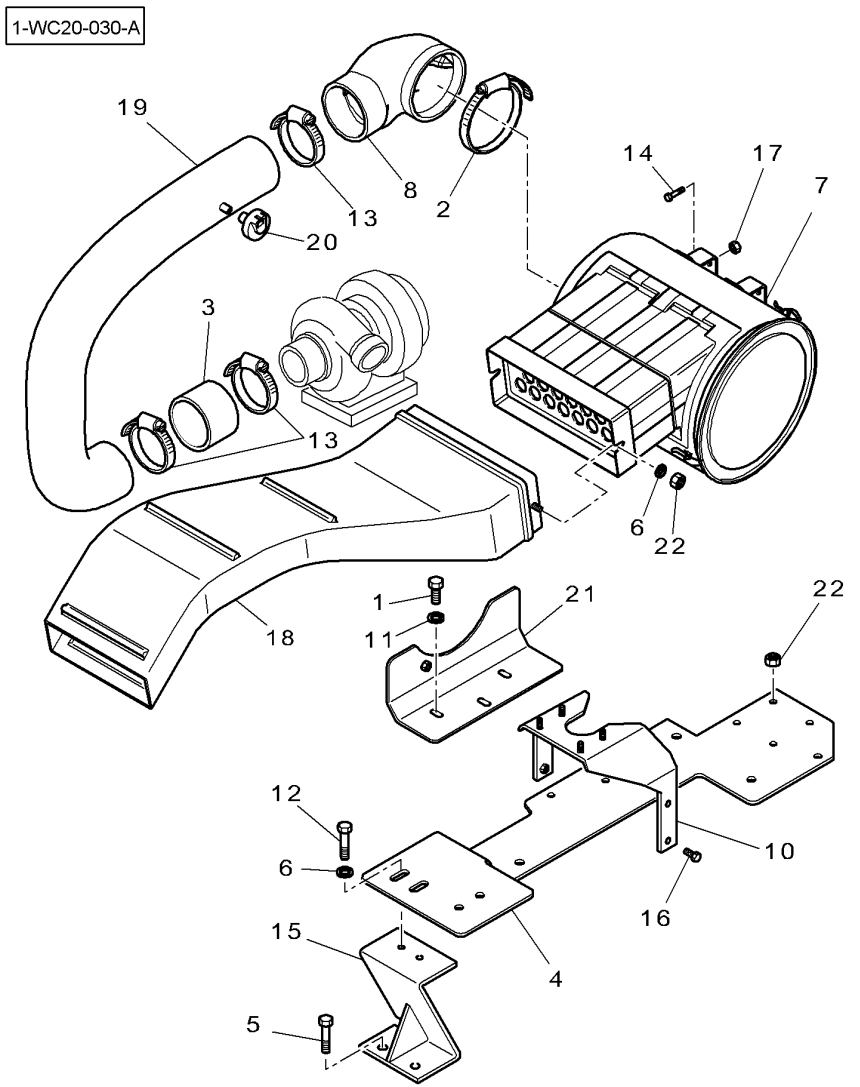

1	339123X1	M8 X 20	**3**	HEX. SOCK. SCREW	VIS TETE HEX VITE PARKER ZYLINDERSCHRAUBE TORN.CAB.HUECA
2	3010162X1	∅ 130-155	**1**	CLAMP	COLLIER FASCETTA HALTESCHELLE ABRAZADERA
3*	3786225M1		**1**	HOSE	DURITE TUBO FLESSIBILE SCHLAUCH TUBO DE GOMA
4*	4289071M3		**1**	PLATE	PLAQUE PIASTRA PLATTE PLATO
5	390419X1	M16 X 40	**2**	HEX. SOCK. SCREW	VIS TETE HEX VITE PARKER ZYLINDERSCHRAUBE TORN.CAB.HUECA
6	390734X1		**4**	FLAT WASHER	RONDELLE PLATE RONDELLE PIANA UNTERLEGSCHEIBEN ARANDELA PLANA
7	4278222M91	10-205 No 1	**1**	AIR FILTER	FILTRE A AIR FILTRO D'ARIA LUFTFILTER FILTRO DE AIRE
8	3788163M1		**1**	TUBE	TUBE TUBO. ROHR TUBO.
10*	4289116M2		**1**	SUPPORT	SUPPORT SOPPORTO TRAGER SOPORTE
11	390972X1		**3**	FLAT WASHER	RONDELLE PLATE RONDELLE PIANA UNTERLEGSCHEIBEN ARANDELA PLANA
12	3009492X1	M10 X 25	**2**	HEX. SOCK. SCREW	VIS TETE HEX VITE PARKER ZYLINDERSCHRAUBE TORN.CAB.HUECA
13*	3010159X1		**2**	CLAMP	COLLIER FASCETTA HALTESCHELLE ABRAZADERA
14	1440716X1	M12 X 30	**4**	HEX. SOCK. SCREW	VIS TETE HEX VITE PARKER ZYLINDERSCHRAUBE TORN.CAB.HUECA
15*	4280072M3		**1**	SUPPORT	SUPPORT SOPPORTO TRAGER SOPORTE
16	3009493X1	M10 X 30	**4**	HEX. SOCK. SCREW	VIS TETE HEX VITE PARKER ZYLINDERSCHRAUBE TORN.CAB.HUECA
17	3009695X1	M12	**4**	NUT	ECROU DADO MUTTER TUERCA
18	4278207M2		**1**	HOSE	DURITE TUBO FLESSIBILE SCHLAUCH TUBO DE GOMA
19*	4288397M1		**1**	TUBE	TUBE TUBO. ROHR TUBO.
20	4284917M1		**1**	VALVOMETER	DEPRESSIOMETRE VALVOMETRO VAKUUMMETER DEPRESIOMETRO
21*	4286389M1		**1**	COWL	GARANT CAPPOTTATURA AUFSATZ CAPERUZA
22	339402X1	M10	**6**	NUT SPECIAL	ECROU SPECIAL DADO SPECIALE SPEZIALMUTTER TUERCA ESPECIAL

Air Filter	Dry - Dual Element
Filtre A Air	Sec Deux Elements
Luftfilter	Doppelter Trockenfiltereinsatz
Filtro D'Aria	Doppio Elemento
Filtro De Aire	Elemento Doble Seco

10-205

1-WC20-015-A

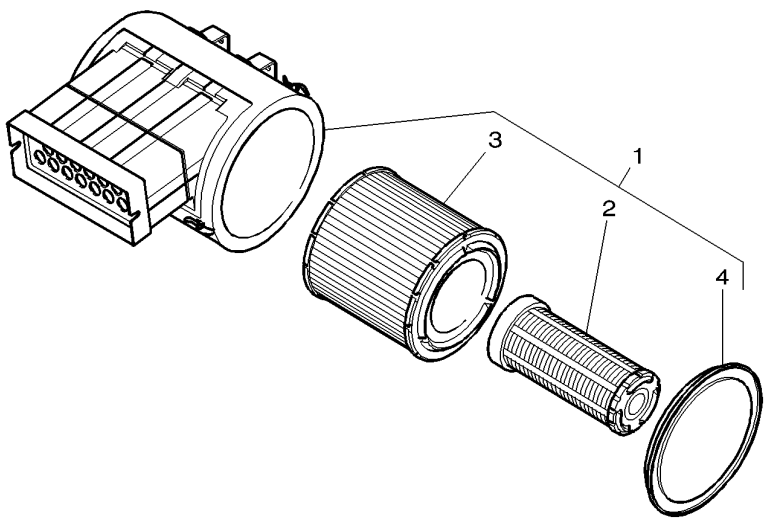

1	4278222M91		**1**	AIR FILTER	FILTRE A AIR FILTRO D'ARIA LUFTFILTER FILTRO DE AIRE
2	**4270018M1**	1	**1**	AIR FITR.ELEMENT	ELEMENTFILTREAIR ELEM.FILTRO ARIA LUFTFILTEREINS ELEMENTO FL.AIRE
3	**4278631M1**	1	**1**	AIR FITR.ELEMENT	ELEMENTFILTREAIR ELEM.FILTRO ARIA LUFTFILTEREINS ELEMENTO FL.AIRE
4	4278565M1	1	**1**	COVER	COUVERCLE COPERCHIO ABDECKUNG. CUBIERTA

Vertical Exhaust On The Side
Echappement Vertical Lateral
Senkrechtem Seitenauspuff
Scarico Verticale Lateral
Escape Vertical Lano Lateral

10-210

United States Up To Mt655b 17-Dec-2006 / Mt665b 11 -Dec-2006
Etats Unis Jusqu'Au Mt655b 17-Dec-2006 / Mt665b 11-Dec-2006
Vereinigten Staaten Bis Mt655b 17-Dec-2006 / Mt 665b 11-Dec-2006
Stati Uniti Fino Alla Mt655b 17-Dec-2006 / Mt665b 11-Dec-2006
Estados Unidos Hasta Mt655b 17-Dec-2006 / Mt665b 11-Dec-2006

1-WC11-028-A

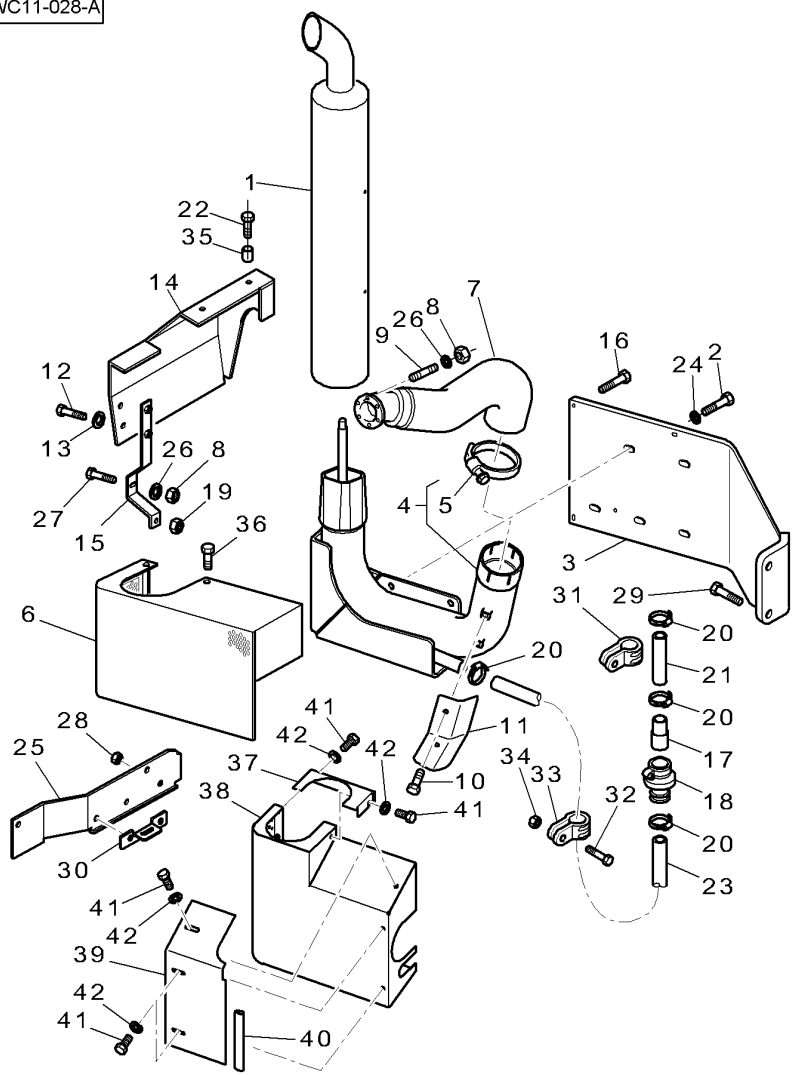

1	4272777M2	AGCO 0037	**1**	TUBE	TUBE TUBO.	ROHR TUBO.
2	3009510X1	M12 X 50	**5**	HEX. SOCK. SCREW	VIS TETE HEX VITE PARKER	ZYLINDERSCHRAUBE TORN.CAB.HUECA
3*	4277149M5		**1**	SUPPORT	SUPPORT SOPPORTO	TRAGER SOPORTE
4	4281310M1		**1**	TAIL PIPE	TUBE ECHAPPEMENT TUBO SCAPPAMENTO	AUSPUFFROHR TUBO DE ESCAPE
5	3782608M1	4 ∅ 119 MM	**1**	CLAMP	COLLIER FASCETTA	HALTESCHELLE ABRAZADERA
6*	4273141M2	(US) ➡ 05-NOV-2006	**1**	COWL	GARANT CAPPOTTATURA	AUFSATZ CAPERUZA
7	3786844M2	➡ R024019	**1**	ADAPTOR	ADAPTATEUR ADATTATORE	REDUZIERNIPPEL ADAPTADOR
8	3010572X1	M8	**7**	NUT	ECROU DADO	MUTTER TUERCA
9	391001X1	M8 X 25	**6**	STUD	GOUJON SPINOTTO FILETT.	STEHBOLZEN ESPARRAGO ROSCA.
10	339228X1	M8 X 12	**2**	HEX. SOCK. SCREW	VIS TETE HEX VITE PARKER	ZYLINDERSCHRAUBE TORN.CAB.HUECA
11	3789287M1		**1**	COWL	GARANT CAPPOTTATURA	AUFSATZ CAPERUZA
12	339560X1	M6 X 16	**2**	HEX. SOCK. SCREW	VIS TETE HEX VITE PARKER	ZYLINDERSCHRAUBE TORN.CAB.HUECA
13	390971X1	∅ 6-12 X 1,5	**2**	FLAT WASHER	RONDELLE PLATE RONDELLE PIANA	UNTERLEGSCHEIBEN ARANDELA PLANA
14	4277489M5		**1**	COWL	GARANT CAPPOTTATURA	AUFSATZ CAPERUZA
15	4277490M2		**1**	REINFORCEMENT	RENFORT RINFORZO	VERSTAERKUNG REFUERZO
16	339010X1	M8 X 40	**4**	HEX. SOCK. SCREW	VIS TETE HEX VITE PARKER	ZYLINDERSCHRAUBE TORN.CAB.HUECA
17	3782356M1	∅ 32-40 MM ◀▶ 60 MM	**1**	ADAPTOR	ADAPTATEUR ADATTATORE	REDUZIERNIPPEL ADAPTADOR
18	3780483M1		**1**	NON RETURN VALVE	CLAPET VALVOLA NO RITOR	RUECKSCHLAGVENT. VALV.SIN RETORNO
19	339402X1	M10	**1**	NUT SPECIAL	ECROU SPECIAL DADO SPECIALE	SPEZIALMUTTER TUERCA ESPECIAL
20	338615X1	∅ 25-40 MM	**4**	CLAMP	COLLIER FASCETTA	HALTESCHELLE ABRAZADERA
21	3038134M1	[A] ◀▶ 740 MM	**1**	TUBE	TUBE TUBO.	ROHR TUBO.
22	339291X1	M8 X 16	**2**	HEX. SOCK. SCREW	VIS TETE HEX VITE PARKER	ZYLINDERSCHRAUBE TORN.CAB.HUECA
23	3321918M1		**1**	EXHAUST PIPE	TUYAU ECHAPPE. TUBO DI SCARICO	AUSPUFFLEITUNG TUBO ESCAPE
24	390735X1	∅ 12-24 X 2,5	**5**	FLAT WASHER	RONDELLE PLATE RONDELLE PIANA	UNTERLEGSCHEIBEN ARANDELA PLANA
25	4280575M3		**1**	COWL	GARANT CAPPOTTATURA	AUFSATZ CAPERUZA
26	390972X1	∅ 8-17 X 1,7	**7**	FLAT WASHER	RONDELLE PLATE RONDELLE PIANA	UNTERLEGSCHEIBEN ARANDELA PLANA

Vertical Exhaust On The Side
Echappement Vertical Lateral
Senkrechtem Seitenauspuff
Scarico Verticale Lateral
Escape Vertical Lano Lateral

10-210

United States Up To Mt655b 17-Dec-2006 / Mt665b 11 -Dec-2006
Etats Unis Jusqu'Au Mt655b 17-Dec-2006 / Mt665b 11-Dec-2006
Vereinigten Staaten Bis Mt655b 17-Dec-2006 / Mt 665b 11-Dec-2006
Stati Uniti Fino Alla Mt655b 17-Dec-2006 / Mt665b 11-Dec-2006
Estados Unidos Hasta Mt655b 17-Dec-2006 / Mt665b 11-Dec-2006

1-WC11-028-A

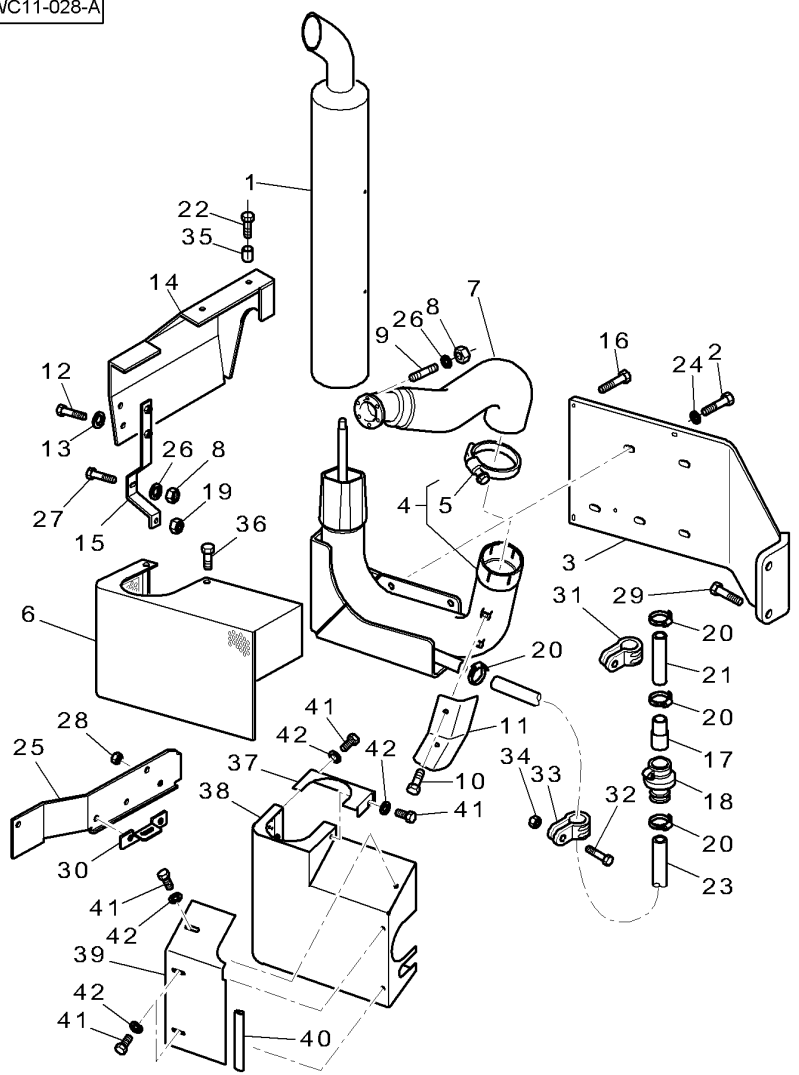

27	339124X1	M8 X 16	**1**	HEX. SOCK. SCREW	VIS TETE HEX VITE PARKER	ZYLINDERSCHRAUBE TORN.CAB.HUECA
28	3009695X1	M12	**3**	NUT	ECROU DADO	MUTTER TUERCA
29	339881X1	M16 X 60	**2**	HEX. SOCK. SCREW	VIS TETE HEX VITE PARKER	ZYLINDERSCHRAUBE TORN.CAB.HUECA
30			**X**	NOT USED	NON UTILISE INUSATO	NICHT VERWENDET NO SE USA
31	3010808X1	∅ 40 - M8	**1**	CLIP	PATTE D'ATTACHE FERMAGLIO	SCHELLE CLIP
32	339761X1	M8 X 25	**1**	HEX. SOCK. SCREW	VIS TETE HEX VITE PARKER	ZYLINDERSCHRAUBE TORN.CAB.HUECA
33	3783956M1	∅ 35 - M8	**1**	STRAP	PATTE CORREGGIA	LASCHE FAJA
34	394367X1	M8	**1**	NUT	ECROU DADO	MUTTER TUERCA
35	3011424X1	∅ 11-20 X 40 MM	**2**	SPACER	ENTRETOISE DISTANZIALE	ABSTANDSTUECK DISCO ESPACIADOR
36	339228X1	M8 X 12	**2**	HEX. SOCK. SCREW	VIS TETE HEX VITE PARKER	ZYLINDERSCHRAUBE TORN.CAB.HUECA
37*	4286590M1	➡ 06-NOV-2006	**1**	COWL	GARANT CAPPOTTATURA	AUFSATZ CAPERUZA
38*	4285982M1	➡ 06-NOV-2006	**1**	COWL	GARANT CAPPOTTATURA	AUFSATZ CAPERUZA
39*	4286589M1	➡ 06-NOV-2006 (US)	**1**	COWL	GARANT CAPPOTTATURA	AUFSATZ CAPERUZA
40*	3782784M1	➡ 06-NOV-2006 (US) ◀▶ 150 MM	**1**	GASKET	JOINT GIUNTO PIANO	FLACHDICHTUNG JUNTA PLANA
41*	339124X1	M8 X 16	**X**	HEX. SOCK. SCREW	VIS TETE HEX VITE PARKER	ZYLINDERSCHRAUBE TORN.CAB.HUECA
42*	339817X1		**X**	WASHER METRIC	RONDELLE METR. RONDELLA METRICO	SCHEIBE METRISCH ARANDELA METRICO

[A] CUT TO REQUIRED LENGTH
COUPER A LA LONGEUR DESIREE
BENOETIGTE LAENGE ABSCHNEIDEN
TAGLIARE ALLA LUNGHEZZA DESIDERATA
CORTAR A LA LONGITUD DESEADA

Vertical Exhaust On The Side
Echappement Vertical Lateral
Senkrechtem Seitenauspuff
Scarico Verticale Lateral
Escape Vertical Lano Lateral

10-215

United States From Mt655b 18-Dec-2006 / Mt665b 12- Dec-2006
Etats Unis A Partir De Mt655b 18-Dec-2006 / Mt665b 12-Dec-2006
Vereinigten Staaten Ab Mt655b 18-Dec-2006 / Mt665b 12-Dec-2006
Stati Uniti Dalla Mt655b 18-Dec-2006 / Mt665b 12- Dec-2006
Estados Unidos A Partir Del Mt655b 18-Dec-2006 / Mt665b 12-Dec-2006

1-WC11-026-B

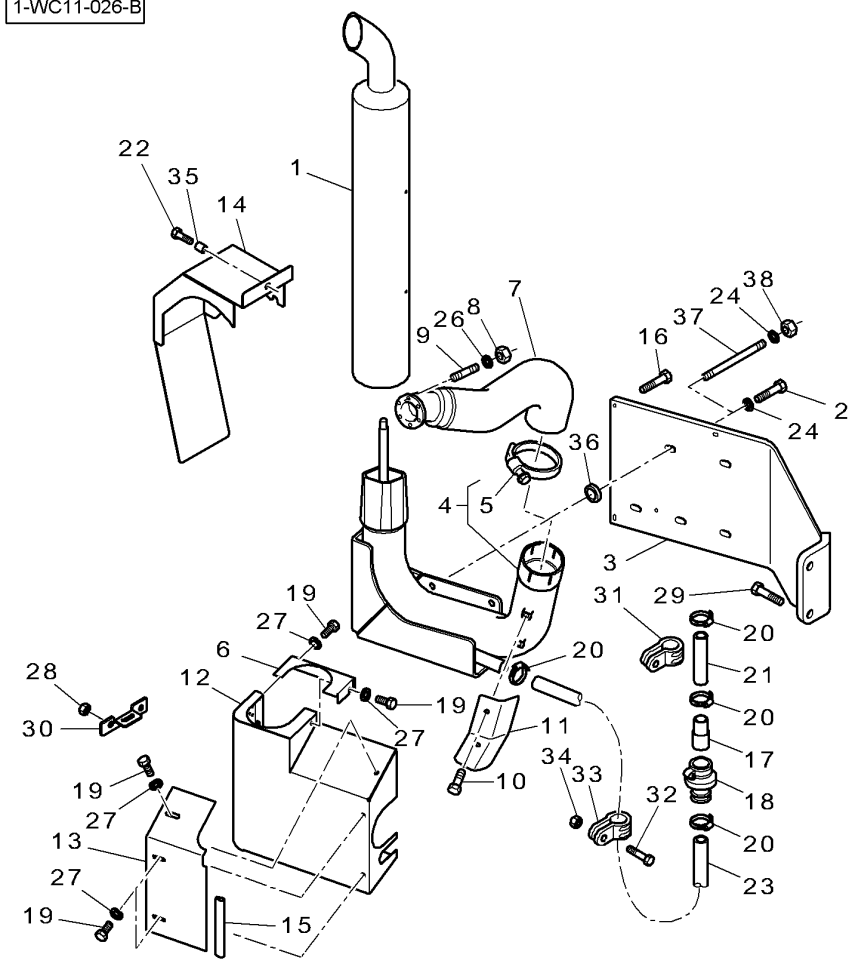

1	4272777M2	AGCO 0037	**1**	TUBE	TUBE TUBO.	ROHR TUBO.
2	3009510X1	➡| M12 X 50	**5**	HEX. SOCK. SCREW	VIS TETE HEX VITE PARKER	ZYLINDERSCHRAUBE TORN.CAB.HUECA
3*	4277149M5		**1**	SUPPORT	SUPPORT SOPPORTO	TRAGER SOPORTE
4*	4281310M1		**1**	TAIL PIPE	TUBE ECHAPPEMENT TUBO SCAPPAMENTO	AUSPUFFROHR TUBO DE ESCAPE
5	3782608M1	4 ∅ 119 MM	**1**	CLAMP	COLLIER FASCETTA	HALTESCHELLE ABRAZADERA
6*	4286590M1		**1**	COWL	GARANT CAPPOTTATURA	AUFSATZ CAPERUZA
7*	4288562M2		**1**	TUBE	TUBE TUBO.	ROHR TUBO.
8*	3010572X1	M8	**6**	NUT	ECROU DADO	MUTTER TUERCA
9	391001X1	M8 X 25	**6**	STUD	GOUJON SPINOTTO FILETT.	STEHBOLZEN ESPARRAGO ROSCA.
10	339228X1	M8 X 12	**2**	HEX. SOCK. SCREW	VIS TETE HEX VITE PARKER	ZYLINDERSCHRAUBE TORN.CAB.HUECA
11	3789287M1		**1**	COWL	GARANT CAPPOTTATURA	AUFSATZ CAPERUZA
12*	4285982M1		**1**	COWL	GARANT CAPPOTTATURA	AUFSATZ CAPERUZA
13*	4286589M1		**1**	COWL	GARANT CAPPOTTATURA	AUFSATZ CAPERUZA
14*	4286450M2		**1**	COWL	GARANT CAPPOTTATURA	AUFSATZ CAPERUZA
15*	3782784M1	◀▶ 150 MM	**1**	GASKET	JOINT GIUNTO PIANO	FLACHDICHTUNG JUNTA PLANA
16	339010X1	M8 X 40	**4**	HEX. SOCK. SCREW	VIS TETE HEX VITE PARKER	ZYLINDERSCHRAUBE TORN.CAB.HUECA
17	3782356M1	∅ 32-40 MM ◀▶ 60 MM	**1**	ADAPTOR	ADAPTATEUR ADATTATORE	REDUZIERNIPPEL ADAPTADOR
18	3780483M1		**1**	NON RETURN VALVE	CLAPET VALVOLA NO RITOR	RUECKSCHLAGVENT. VALV.SIN RETORNO
19*	339124X1	M8 X 16	**X**	HEX. SOCK. SCREW	VIS TETE HEX VITE PARKER	ZYLINDERSCHRAUBE TORN.CAB.HUECA
20	338615X1	∅ 25-40 MM	**4**	CLAMP	COLLIER FASCETTA	HALTESCHELLE ABRAZADERA
21	3038134M1	[A] ◀▶ 740 MM	**1**	TUBE	TUBE TUBO.	ROHR TUBO.
22	339291X1	M8 X 16	**2**	HEX. SOCK. SCREW	VIS TETE HEX VITE PARKER	ZYLINDERSCHRAUBE TORN.CAB.HUECA
23*	3321918M1		**1**	EXHAUST PIPE	TUYAU ECHAPPE. TUBO DI SCARICO	AUSPUFFLEITUNG TUBO ESCAPE
24	390735X1	∅ 12-24 X 2,5	**5**	FLAT WASHER	RONDELLE PLATE RONDELLE PIANA	UNTERLEGSCHEIBEN ARANDELA PLANA
26*	390972X1	∅ 8-17 X 1,7	**6**	FLAT WASHER	RONDELLE PLATE RONDELLE PIANA	UNTERLEGSCHEIBEN ARANDELA PLANA
27*	339817X1		**X**	WASHER METRIC	RONDELLE METR. RONDELLA METRICO	SCHEIBE METRISCH ARANDELA METRICO

Vertical Exhaust On The Side
Echappement Vertical Lateral
Senkrechtem Seitenauspuff
Scarico Verticale Lateral
Escape Vertical Lano Lateral

10-215

United States From Mt655b 18-Dec-2006 / Mt665b 12- Dec-2006
Etats Unis A Partir De Mt655b 18-Dec-2006 / Mt665b 12-Dec-2006
Vereinigten Staaten Ab Mt655b 18-Dec-2006 / Mt665b 12-Dec-2006
Stati Uniti Dalla Mt655b 18-Dec-2006 / Mt665b 12- Dec-2006
Estados Unidos A Partir Del Mt655b 18-Dec-2006 / Mt665b 12-Dec-2006

1-WC11-026-B

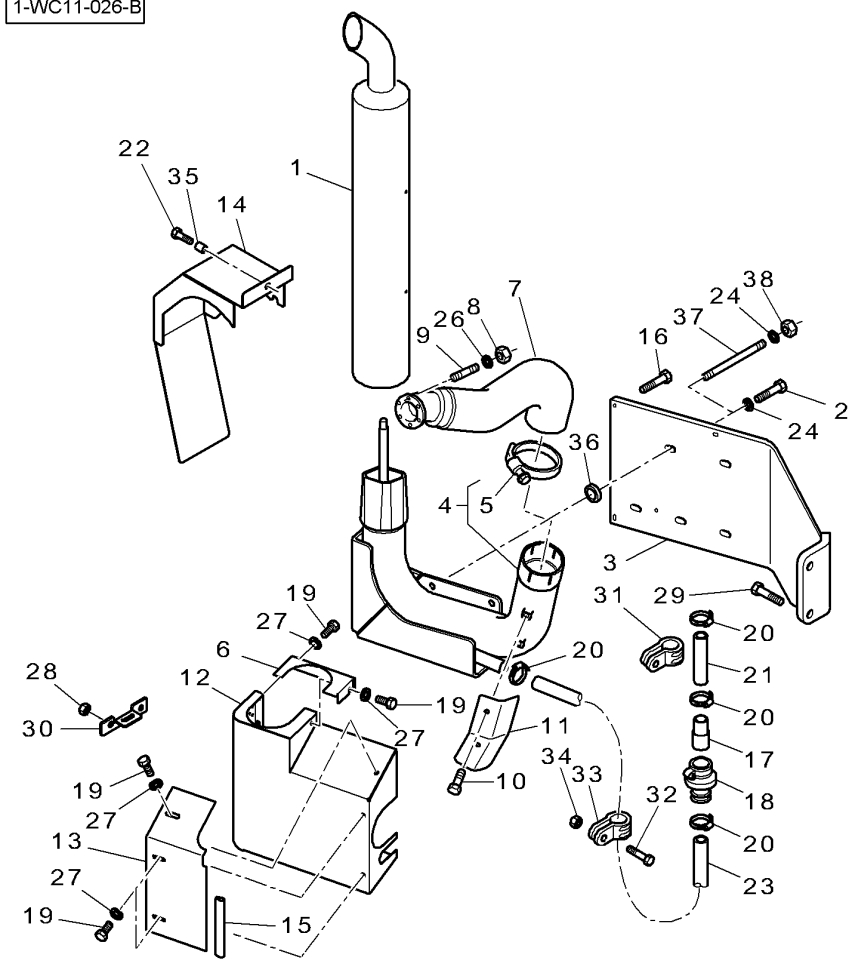

28	3009695X1	M12	**3** NUT	ECROU DADO	MUTTER TUERCA
29	339881X1	M16 X 60	**2** HEX. SOCK. SCREW	VIS TETE HEX VITE PARKER	ZYLINDERSCHRAUBE TORN.CAB.HUECA
30			**X** NOT USED	NON UTILISE INUSATO	NICHT VERWENDET NO SE USA
31	3010808X1	∅ 40 - M8	**1** CLIP	PATTE D'ATTACHE FERMAGLIO	SCHELLE CLIP
32	339761X1	M8 X 25	**1** HEX. SOCK. SCREW	VIS TETE HEX VITE PARKER	ZYLINDERSCHRAUBE TORN.CAB.HUECA
33	3783956M1	∅ 35 - M8	**1** STRAP	PATTE CORREGGIA	LASCHE FAJA
34	394367X1	M8	**1** NUT	ECROU DADO	MUTTER TUERCA
35	3011424X1	∅ 11-20 X 40 MM	**2** SPACER	ENTRETOISE DISTANZIALE	ABSTANDSTUECK DISCO ESPACIADOR
36*	3010875X1	➡ ∅ 16-30 X 5	**5** WASHER	RONDELLE RONDELLA	SCHEIBE ARANDELA
37*	1440028X1	➡	**5** STUD	GOUJON SPINOTTO FILETT.	STEHBOLZEN ESPARRAGO ROSCA.
38*	1442190X1	➡	**5** LOCKNUT	ECROU FREIN AUTOBLOCCANTE	SICHERUNGSMUTTER CONTRATUERCA

[A] CUT TO REQUIRED LENGTH
COUPER A LA LONGEUR DESIREE
BENOETIGTE LAENGE ABSCHNEIDEN
TAGLIARE ALLA LUNGHEZZA DESIDERATA
CORTAR A LA LONGITUD DESEADA

Vertical Exhaust On The Side
Echappement Vertical Lateral
Senkrechtem Seitenauspuff
Scarico Verticale Lateral
Escape Vertical Lano Lateral

10-220

Excepted United States Up To Mt655b 17-Dec-2006 / Mt665b 11-Dec-2006
Sauf Etats Unis Jusqu'Au Mt655b 17-Dec-2006 / Mt 665b 11-Dec-2006
Ohne Vereinigten Staaten Mt655b 17-Dec-2006 / Mt 665b 11-Dec-2006
Sin Stati Uniti Fino Alla Mt655b 17-Dec-2006 / Mt 665b 11-Dec-2006
Sin Estados Unidos Hasta Mt655b 17-Dec-2006 / Mt 665b 11-Dec-2006

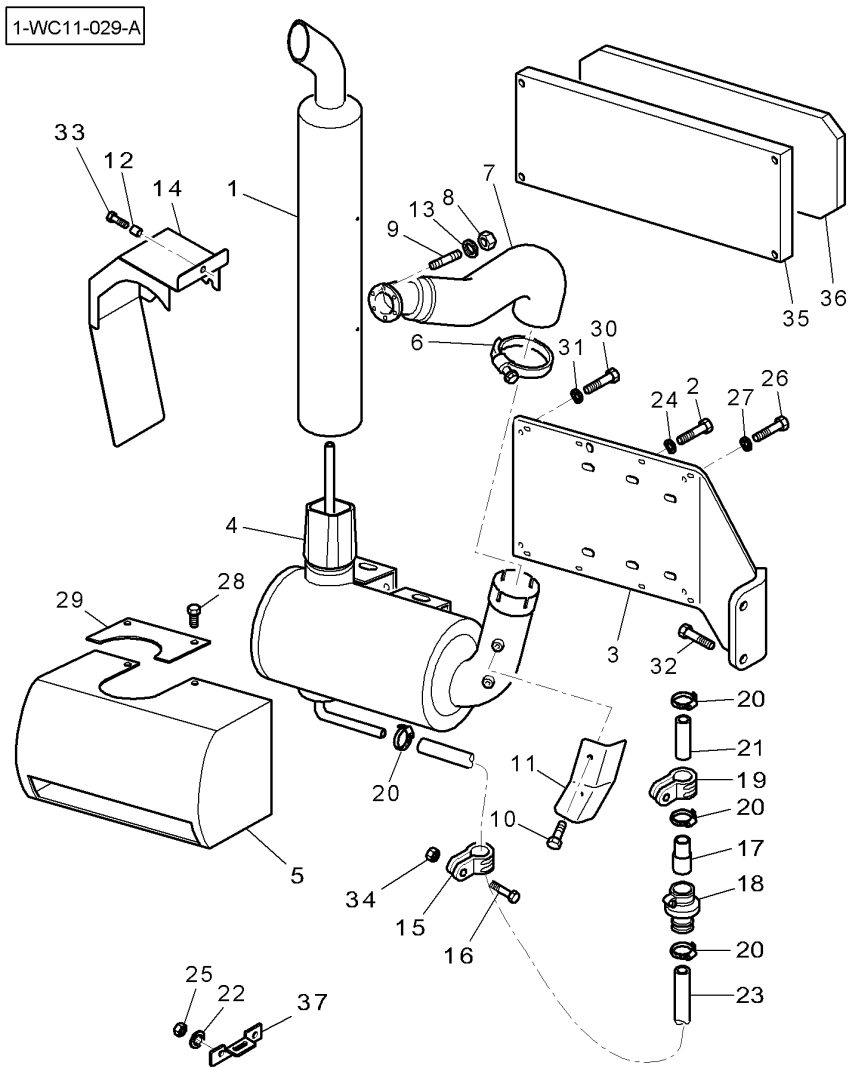

1	4272777M2	AGCO 0037	**1**	TUBE	TUBE TUBO.	ROHR TUBO.
2	3009509X1	M12 X 45	**6**	HEX. SOCK. SCREW	VIS TETE HEX VITE PARKER	ZYLINDERSCHRAUBE TORN.CAB.HUECA
3	4275001M2		**1**	SUPPORT	SUPPORT SOPPORTO	TRAGER SOPORTE
4	4278589M2	AGCO 0058	**1**	SILENCER	SILENCIEUX SILENZIATORE	AUSPUFFTOPF SILENCIADOR
5	4278886M2		**1**	COWL	GARANT CAPPOTTATURA	AUFSATZ CAPERUZA
6	3782608M1	∅ 119 MM	**1**	CLAMP	COLLIER FASCETTA	HALTESCHELLE ABRAZADERA
7	4280897M1		**1**	ADAPTOR	ADAPTATEUR ADATTATORE	REDUZIERNIPPEL ADAPTADOR
8	3010572X1	M8	**7**	NUT	ECROU DADO	MUTTER TUERCA
9	391001X1	M8 X 25	**6**	STUD	GOUJON SPINOTTO FILETT.	STEHBOLZEN ESPARRAGO ROSCA.
10	339228X1	M8 X 12	**3**	HEX. SOCK. SCREW	VIS TETE HEX VITE PARKER	ZYLINDERSCHRAUBE TORN.CAB.HUECA
11	3789287M1		**1**	COWL	GARANT CAPPOTTATURA	AUFSATZ CAPERUZA
12	391074X1	M6 X 12	**2**	HEX. SOCK. SCREW	VIS TETE HEX VITE PARKER	ZYLINDERSCHRAUBE TORN.CAB.HUECA
13	390972X1	∅ 8-17 X 1,7	**7**	FLAT WASHER	RONDELLE PLATE RONDELLE PIANA	UNTERLEGSCHEIBEN ARANDELA PLANA
14	4277489M5		**1**	COWL	GARANT CAPPOTTATURA	AUFSATZ CAPERUZA
15	4277490M2		**1**	REINFORCEMENT	RENFORT RINFORZO	VERSTAERKUNG REFUERZO
16	339402X1	M10	**1**	NUT SPECIAL	ECROU SPECIAL DADO SPECIALE	SPEZIALMUTTER TUERCA ESPECIAL
17	3782356M1	∅ 32-40 MM ◀▶ 60 MM	**1**	ADAPTOR	ADAPTATEUR ADATTATORE	REDUZIERNIPPEL ADAPTADOR
18	3780483M1		**1**	NON RETURN VALVE	CLAPET VALVOLA NO RITOR	RUECKSCHLAGVENT. VALV.SIN RETORNO
19	4280575M3		**1**	COWL	GARANT CAPPOTTATURA	AUFSATZ CAPERUZA
20	338615X1	∅ 25-40 MM	**4**	CLAMP	COLLIER FASCETTA	HALTESCHELLE ABRAZADERA
21	3038134M1	[A] ◀▶ 1270 MM	**1**	TUBE	TUBE TUBO.	ROHR TUBO.
22	390735X1	∅ 12-24 X 2,5	**3**	FLAT WASHER	RONDELLE PLATE RONDELLE PIANA	UNTERLEGSCHEIBEN ARANDELA PLANA
23	3321918M1		**1**	EXHAUST PIPE	TUYAU ECHAPPE. TUBO DI SCARICO	AUSPUFFLEITUNG TUBO ESCAPE
24	390735X1	∅ 12-24 X 2,5	**6**	FLAT WASHER	RONDELLE PLATE RONDELLE PIANA	UNTERLEGSCHEIBEN ARANDELA PLANA
25	3009695X1	M12	**3**	NUT	ECROU DADO	MUTTER TUERCA
26	339009X1	M8 X 35	**8**	HEX. SOCK. SCREW	VIS TETE HEX VITE PARKER	ZYLINDERSCHRAUBE TORN.CAB.HUECA

Vertical Exhaust On The Side
Echappement Vertical Lateral
Senkrechtem Seitenauspuff
Scarico Verticale Lateral
Escape Vertical Lano Lateral

10-220

Excepted United States Up To Mt655b 17-Dec-2006 / Mt665b 11-Dec-2006
Sauf Etats Unis Jusqu'Au Mt655b 17-Dec-2006 / Mt 665b 11-Dec-2006
Ohne Vereinigten Staaten Mt655b 17-Dec-2006 / Mt 665b 11-Dec-2006
Sin Stati Uniti Fino Alla Mt655b 17-Dec-2006 / Mt 665b 11-Dec-2006
Sin Estados Unidos Hasta Mt655b 17-Dec-2006 / Mt 665b 11-Dec-2006

1-WC11-029-A

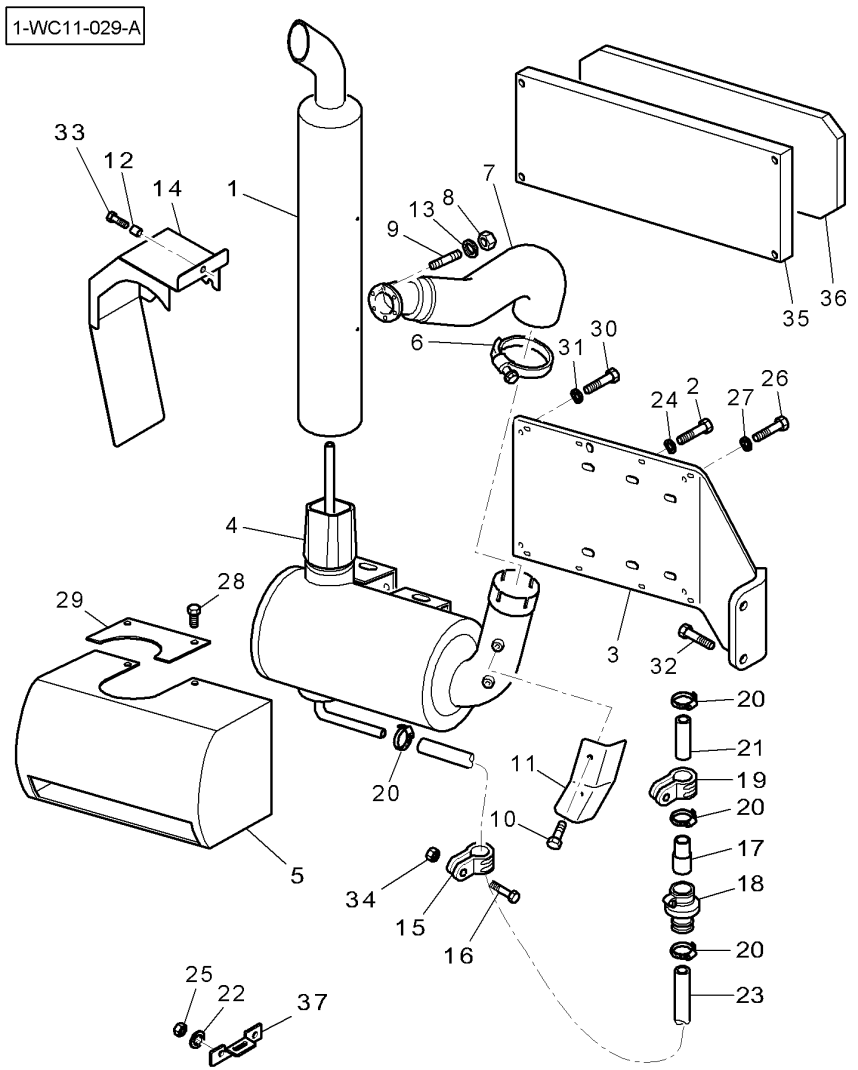

27	390972X1	∅ 8-17 X 1,7	**8**	FLAT WASHER	RONDELLE PLATE RONDELLE PIANA	UNTERLEGSCHEIBEN ARANDELA PLANA
28	339124X1	M8 X 16	**2**	HEX. SOCK. SCREW	VIS TETE HEX VITE PARKER	ZYLINDERSCHRAUBE TORN.CAB.HUECA
29	4270726M1		**1**	PLATE	PLAQUE PIASTRA	PLATTE PLATO
30	339010X1	M8 X 40	**4**	HEX. SOCK. SCREW	VIS TETE HEX VITE PARKER	ZYLINDERSCHRAUBE TORN.CAB.HUECA
31	390972X1	∅ 8-17 X 1,7	**8**	FLAT WASHER	RONDELLE PLATE RONDELLE PIANA	UNTERLEGSCHEIBEN ARANDELA PLANA
32	339881X1	M16 X 60	**2**	HEX. SOCK. SCREW	VIS TETE HEX VITE PARKER	ZYLINDERSCHRAUBE TORN.CAB.HUECA
33	339228X1	M8 X 12	**2**	HEX. SOCK. SCREW	VIS TETE HEX VITE PARKER	ZYLINDERSCHRAUBE TORN.CAB.HUECA
34	394367X1	M8	**1**	NUT	ECROU DADO	MUTTER TUERCA
35	4278885M1		**1**	COWL	GARANT CAPPOTTATURA	AUFSATZ CAPERUZA
36	4278897M1		**1**	SOUND REDUCTION	INSONORISATION INSONORIZZANTE	SCHALLDAEMMUNG REDUCTOR SONIDO
37			**X**	NOT USED	NON UTILISE INUSATO	NICHT VERWENDET NO SE USA
38	3010808X1	∅ 40 - M8	**1**	CLIP	PATTE D'ATTACHE FERMAGLIO	SCHELLE CLIP
39	339761X1	M8 X 25	**1**	HEX. SOCK. SCREW	VIS TETE HEX VITE PARKER	ZYLINDERSCHRAUBE TORN.CAB.HUECA
40	3783956M1	∅ 35 - M8	**1**	STRAP	PATTE CORREGGIA	LASCHE FAJA
41	3011424X1	∅ 11-20 X 40 MM	**2**	SPACER	ENTRETOISE DISTANZIALE	ABSTANDSTUECK DISCO ESPACIADOR
42	339291X1	M8 X 55	**2**	HEX. SOCK. SCREW	VIS TETE HEX VITE PARKER	ZYLINDERSCHRAUBE TORN.CAB.HUECA

[A] CUT TO REQUIRED LENGTH
COUPER A LA LONGEUR DESIREE
BENOETIGTE LAENGE ABSCHNEIDEN
TAGLIARE ALLA LUNGHEZZA DESIDERATA
CORTAR A LA LONGITUD DESEADA

Vertical Exhaust On The Side
Echappement Vertical Lateral
Senkrechtem Seitenauspuff
Scarico Verticale Lateral
Escape Vertical Lano Lateral

10-225

Excepted United States From Mt655b 18-Dec-2006 / Mt665b 12-Dec-2006
Sauf Etats Unis A Partir De Mt655b 18-Dec-2006 / Mt665b 12-Dec-2006
Ohne Vereinigten Staaten Ab Mt655b 18-Dec-2006 / Mt 665b-12-Dec-2006
Sin Stati Uniti Dalla Mt655b 18-Dec-2006 / Mt665b 12-Dec-2006
Sin Stados Unidos A Partir Del Mt655b 18-Dec-2006 / Mt665b 12-Dec-2006

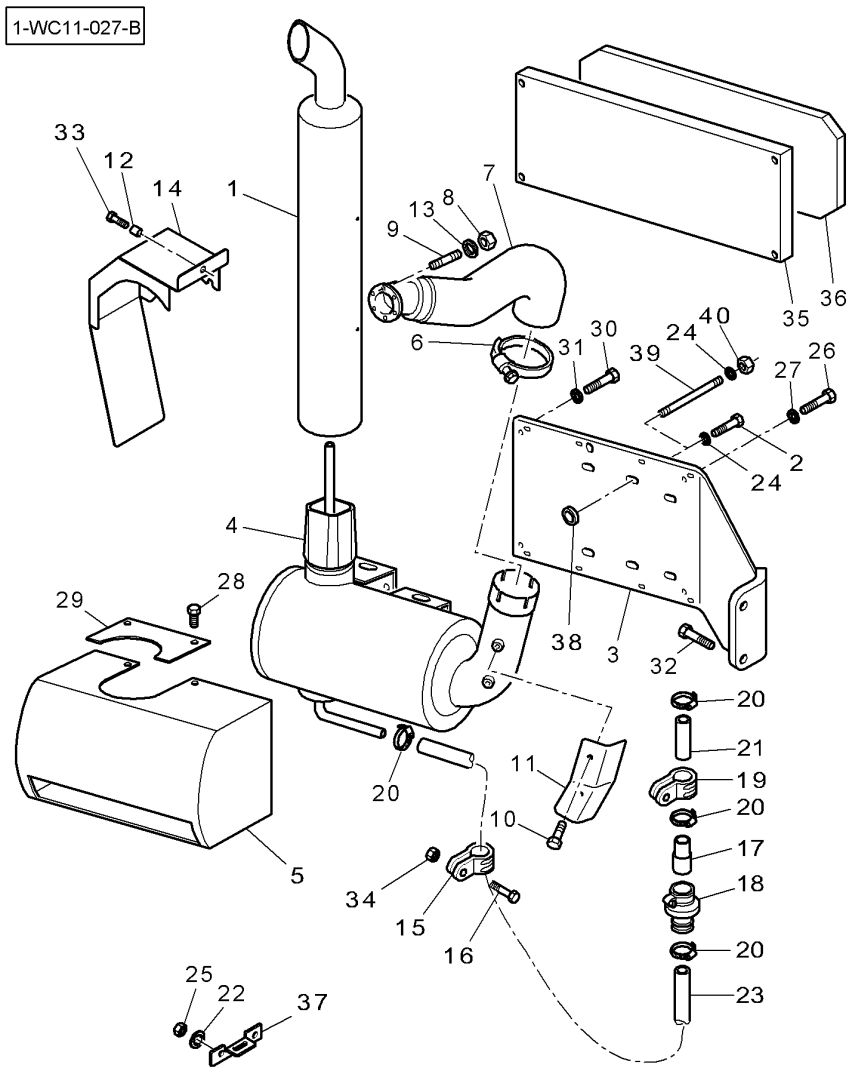

1	4272777M2	AGCO 0037	**1**	TUBE	TUBE TUBO.	ROHR TUBO.
2	3009509X1	➡| M12 X 45	**6**	HEX. SOCK. SCREW	VIS TETE HEX VITE PARKER	ZYLINDERSCHRAUBE TORN.CAB.HUECA
3	4275001M2		**1**	SUPPORT	SUPPORT SOPPORTO	TRAGER SOPORTE
4	4278589M2	AGCO 0058	**1**	SILENCER	SILENCIEUX SILENZIATORE	AUSPUFFTOPF SILENCIADOR
5	4278886M2		**1**	COWL	GARANT CAPPOTTATURA	AUFSATZ CAPERUZA
6	3782608M1	∅ 119 MM	**1**	CLAMP	COLLIER FASCETTA	HALTESCHELLE ABRAZADERA
7*	4288562M2		**1**	TUBE	TUBE TUBO.	ROHR TUBO.
8*	3010572X1	M8	**6**	NUT	ECROU DADO	MUTTER TUERCA
9	391001X1	M8 X 25	**6**	STUD	GOUJON SPINOTTO FILETT.	STEHBOLZEN ESPARRAGO ROSCA.
10*	339228X1	M8 X 12	**2**	HEX. SOCK. SCREW	VIS TETE HEX VITE PARKER	ZYLINDERSCHRAUBE TORN.CAB.HUECA
11	3789287M1		**1**	COWL	GARANT CAPPOTTATURA	AUFSATZ CAPERUZA
12	3011424X1	∅ 11-20 X 40 MM	**2**	SPACER	ENTRETOISE DISTANZIALE	ABSTANDSTUECK DISCO ESPACIADOR
13*	390972X1	∅ 8-17 X 1,7	**6**	FLAT WASHER	RONDELLE PLATE RONDELLE PIANA	UNTERLEGSCHEIBEN ARANDELA PLANA
14*	4286450M2		**1**	COWL	GARANT CAPPOTTATURA	AUFSATZ CAPERUZA
15	3783956M1	∅ 35 - M8	**1**	STRAP	PATTE CORREGGIA	LASCHE FAJA
16	339761X1	M8 X 25	**1**	HEX. SOCK. SCREW	VIS TETE HEX VITE PARKER	ZYLINDERSCHRAUBE TORN.CAB.HUECA
17	3782356M1	∅ 32-40 MM ◀▶ 60 MM	**1**	ADAPTOR	ADAPTATEUR ADATTATORE	REDUZIERNIPPEL ADAPTADOR
18	3780483M1		**1**	NON RETURN VALVE	CLAPET VALVOLA NO RITOR	RUECKSCHLAGVENT. VALV.SIN RETORNO
19	3010808X1	∅ 40 - M8	**1**	CLIP	PATTE D'ATTACHE FERMAGLIO	SCHELLE CLIP
20	338615X1	∅ 25-40 MM	**4**	CLAMP	COLLIER FASCETTA	HALTESCHELLE ABRAZADERA
21	3038134M1	[A] ◀▶ 1270 MM	**1**	TUBE	TUBE TUBO.	ROHR TUBO.
22	390735X1	∅ 12-24 X 2,5	**3**	FLAT WASHER	RONDELLE PLATE RONDELLE PIANA	UNTERLEGSCHEIBEN ARANDELA PLANA
23*	3321918M1		**1**	EXHAUST PIPE	TUYAU ECHAPPE. TUBO DI SCARICO	AUSPUFFLEITUNG TUBO ESCAPE
24	390735X1	∅ 12-24 X 2,5	**6**	FLAT WASHER	RONDELLE PLATE RONDELLE PIANA	UNTERLEGSCHEIBEN ARANDELA PLANA
25	3009695X1	M12	**3**	NUT	ECROU DADO	MUTTER TUERCA
26	339009X1	M8 X 35	**8**	HEX. SOCK. SCREW	VIS TETE HEX VITE PARKER	ZYLINDERSCHRAUBE TORN.CAB.HUECA

Vertical Exhaust On The Side
Echappement Vertical Lateral
Senkrechtem Seitenauspuff
Scarico Verticale Lateral
Escape Vertical Lano Lateral

10-225

Excepted United States From Mt655b 18-Dec-2006 / Mt665b 12-Dec-2006
Sauf Etats Unis A Partir De Mt655b 18-Dec-2006 / Mt665b 12-Dec-2006
Ohne Vereinigten Staaten Ab Mt655b 18-Dec-2006 / Mt 665b-12-Dec-2006
Sin Stati Uniti Dalla Mt655b 18-Dec-2006 / Mt665b 12-Dec-2006
Sin Stados Unidos A Partir Del Mt655b 18-Dec-2006 / Mt665b 12-Dec-2006

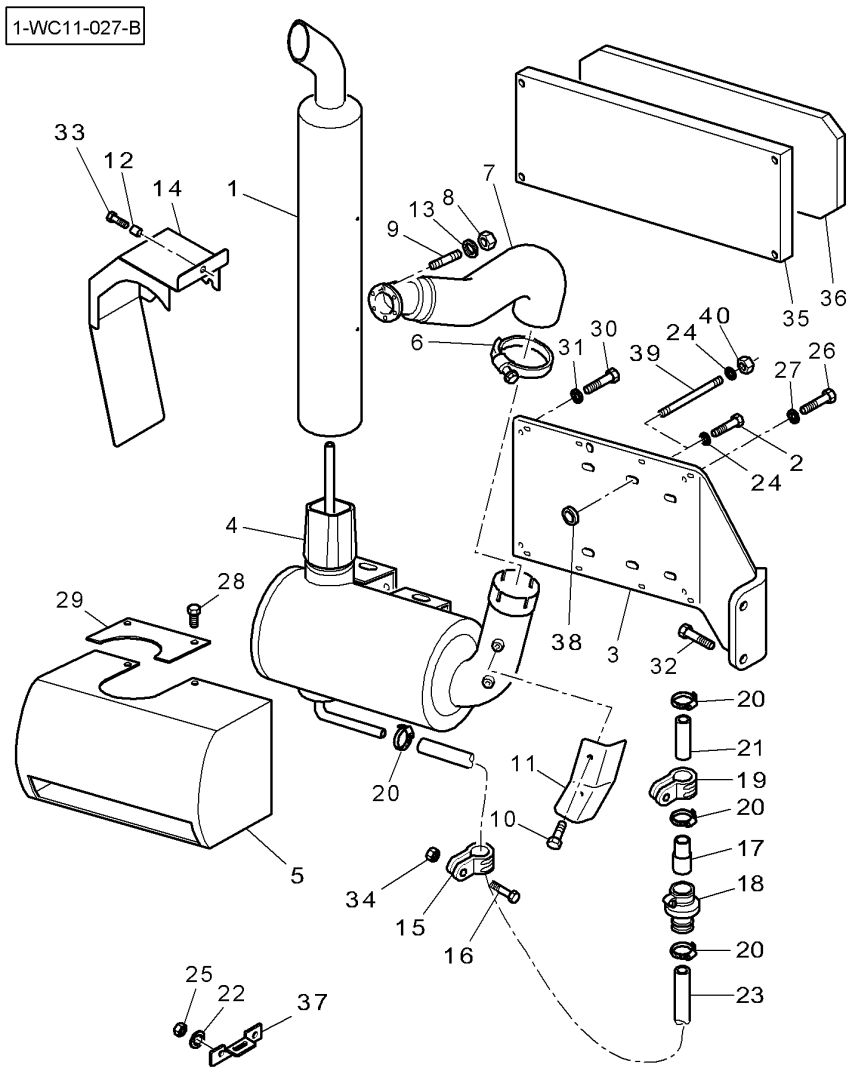

27	390972X1	∅ 8-17 X 1,7	**8**	FLAT WASHER	RONDELLE PLATE / RONDELLE PIANA / UNTERLEGSCHEIBEN / ARANDELA PLANA
28	339124X1	M8 X 16	**2**	HEX. SOCK. SCREW	VIS TETE HEX / VITE PARKER / ZYLINDERSCHRAUBE / TORN.CAB.HUECA
29	4270726M1		**1**	PLATE	PLAQUE / PIASTRA / PLATTE / PLATO
30	339010X1	M8 X 40	**4**	HEX. SOCK. SCREW	VIS TETE HEX / VITE PARKER / ZYLINDERSCHRAUBE / TORN.CAB.HUECA
31	390972X1	∅ 8-17 X 1,7	**8**	FLAT WASHER	RONDELLE PLATE / RONDELLE PIANA / UNTERLEGSCHEIBEN / ARANDELA PLANA
32	339881X1	M16 X 60	**2**	HEX. SOCK. SCREW	VIS TETE HEX / VITE PARKER / ZYLINDERSCHRAUBE / TORN.CAB.HUECA
33	339291X1	M8 X 55	**2**	HEX. SOCK. SCREW	VIS TETE HEX / VITE PARKER / ZYLINDERSCHRAUBE / TORN.CAB.HUECA
34	394367X1	M8	**1**	NUT	ECROU / DADO / MUTTER / TUERCA
35	4278885M1		**1**	COWL	GARANT / CAPPOTTATURA / AUFSATZ / CAPERUZA
36	4278897M1		**1**	SOUND REDUCTION	INSONORISATION / INSONORIZZANTE / SCHALLDAEMMUNG / REDUCTOR SONIDO
37			**X**	NOT USED	NON UTILISE / INUSATO / NICHT VERWENDET / NO SE USA
38*	3010875X1	➡ ∅ 16-30 X 5	**5**	WASHER	RONDELLE / RONDELLA / SCHEIBE / ARANDELA
39*	1440028X1		**5**	STUD	GOUJON / SPINOTTO FILETT. / STEHBOLZEN / ESPARRAGO ROSCA.
40*	1442190X1		**5**	LOCKNUT	ECROU FREIN / AUTOBLOCCANTE / SICHERUNGSMUTTER / CONTRATUERCA

[A] CUT TO REQUIRED LENGTH
COUPER A LA LONGEUR DESIREE
BENOETIGTE LAENGE ABSCHNEIDEN
TAGLIARE ALLA LUNGHEZZA DESIDERATA
CORTAR A LA LONGITUD DESEADA

Throttle Controls
Commande D'Acceleration
Kraftstoffregelung
Comandi Acceleratore
Mandos Acelerador

10-230

1-WC14-002-D

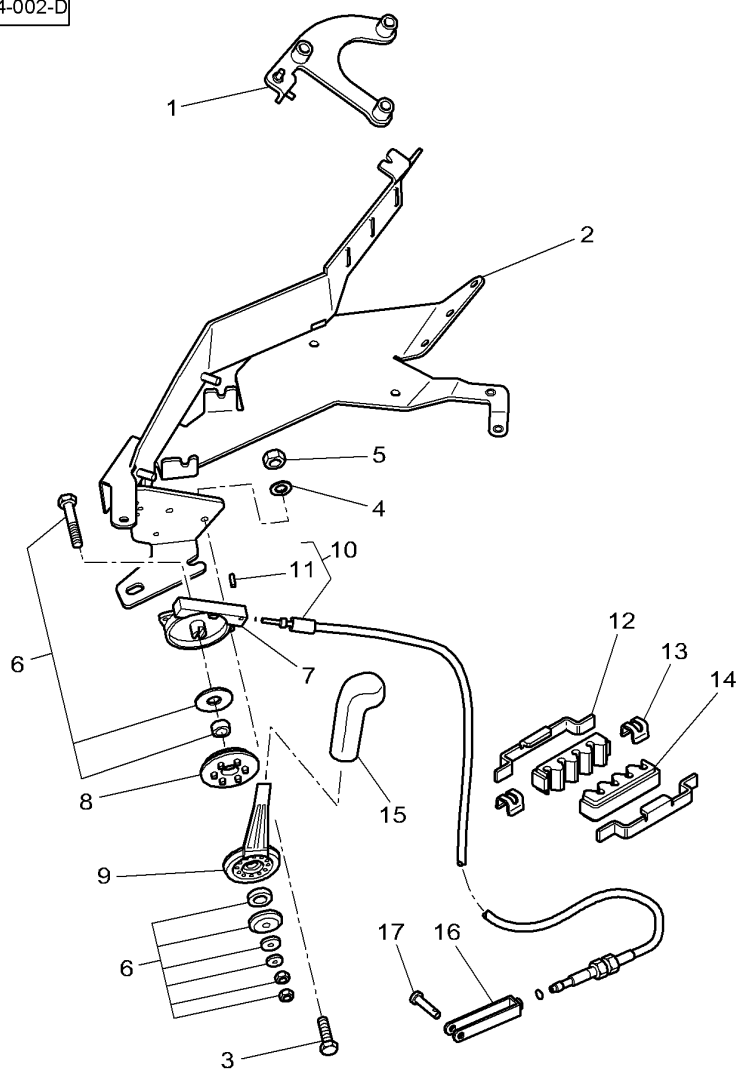

1*	4270719M4		**1**	SUPPORT	SUPPORT SOPPORTO	TRAGER SOPORTE
2	3787580M93		**1**	SUPPORT	SUPPORT SOPPORTO	TRAGER SOPORTE
3	339563X1	M5 X 20	**3**	HEX. SOCK. SCREW	VIS TETE HEX VITE PARKER	ZYLINDERSCHRAUBE TORN.CAB.HUECA
4	3019560X1	∅ 5-15 X 1,5	**3**	WASHER	RONDELLE RONDELLA	SCHEIBE ARANDELA
5	1441494X1	M5	**3**	NUT METRIC	ECROU METRIQUE DADO METRICO	MUTTER METRISCH TUERCA METRICO
6*	3785336M3	➡ R072034	**1**	PARTS PACK	JEU PIECES PACCO RICAMBI	SATZ TEILE PAQUETE PIEZAS
6*	4285770M1	➡ R072035	**1**	PARTS PACK	JEU PIECES PACCO RICAMBI	SATZ TEILE PAQUETE PIEZAS
7*	3786152M2	➡ R072034	**1**	CASE ASSY	BOITIER CARCASSA COMPLET	GEHAEUSE KPL CAJA COMPLETA
7*	4285771M1	➡ R072035	**1**	CASE ASSY	BOITIER CARCASSA COMPLET	GEHAEUSE KPL CAJA COMPLETA
8*	3789513M1	➡ R072034	**1**	FLANGE	FLASQUE FLANGIA	FLANSCH PLETINA
8*	4285772M1	➡ R072035	**1**	FLANGE	FLASQUE FLANGIA	FLANSCH PLETINA
9*	3785335M3	➡ R072034	**1**	LEVER	LEVIER LEVA	HEBEL PALANCA
9*	4285769M1	➡ R072035	**1**	LEVER	LEVIER LEVA	HEBEL PALANCA
10	4271798M3	●○ 4271795M94	**1**	CABLE	CABLE CAVO	KABEL CABLE
11	339303X1	10	**1**	DOWEL	PLOT SPINA	ZYLINDERSTIFT CENTRAJE
12	4270509M2		**2**	SUPPORT	SUPPORT SOPPORTO	TRAGER SOPORTE
13	4270510M1		**2**	CLIP	PATTE D'ATTACHE FERMAGLIO	SCHELLE CLIP
14*	4270508M3		**2**	BRIDLE	BRIDE BRIGLIA	LASCHENSPANNBAND BRIDA
15*	3785000M1		**1**	GRIP	POIGNEE MANIGLIA	HANDGRIFF MANGO
16	3616399M1		**1**	STIRRUP	ETRIER STAFFA	BUEGEL FUACION
17	832297M1		**1**	CLEVIS PIN	AXE PERNO D'ATTACCO	SPLINTBOLZEN BULON CILINDRICO

Throttle Controls
Commande D'Acceleration
Kraftstoffregelung
Comandi Acceleratore
Mandos Acelerador

10-235

1-WC14-011-C

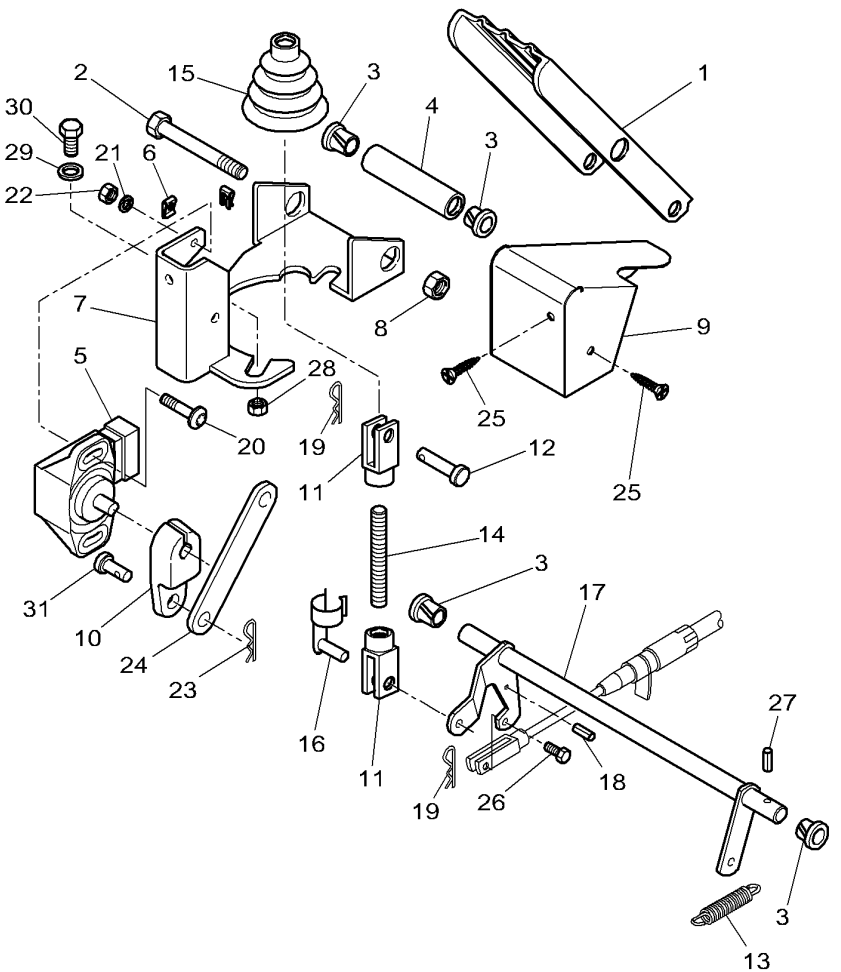

1	3712851M91		**1**	PEDAL	PEDALE PEDALE	PEDAL PEDAL
2	391286X1	M8 X 85	**1**	HEX. SOCK. SCREW	VIS TETE HEX VITE PARKER	ZYLINDERSCHRAUBE TORN.CAB.HUECA
3	3385913M2		**4**	BUSH	BAGUE BOCCOLA	RING CASQUILLO
4	3712867M1	∅ 9-12 X 74	**1**	SPACER	ENTRETOISE DISTANZIALE	ABSTANDSTUECK DISCO ESPACIADOR
5	**3784361M1**		**1**	TRANSDUCER	CAPTEUR TRANSDUCER	NABENTRIEB. TRANSDUCER
6	3715142M1	M5	**2**	SPRING NUT	ECROU RESSORT SPRING NUT	FEDERMUTTER TUERCA RESORTE
7	4270814M1		**1**	SUPPORT	SUPPORT SOPPORTO	TRAGER SOPORTE
8	394367X1	M8	**1**	NUT	ECROU DADO	MUTTER TUERCA
9	3784343M2		**1**	COWL	GARANT CAPPOTTATURA	AUFSATZ CAPERUZA
10	4271320M1		**1**	ROD LINK	BIELLETTE BISCOTTINO	VERBINDG.STANGE VARILLA ENGANCHE
11	392463X1	∅ 6 X 36	**2**	YOKE	CHAPE ARTICULAT FORCELLA.	GELENKGABEL YUGO
12	392235X1	∅ 6 X 20	**1**	CLEVIS PIN	AXE PERNO D'ATTACCO	SPLINTBOLZEN BULON CILINDRICO
13	4280636M1	◄► 105 MM	**1**	SPRING	RESSORT MOLLA	FEDER MUELLE
14	3712866M2	M6 X 70	**1**	STEM	TIGE ASTA DEL ZAPETTA	MESSERSTIEL VASTAGO
15	3712886M1		**1**	BELLOWS	SOUFFLET SOFFIETTO	FALTENBALG FUELLE
16	3713042M1		**1**	CLEVIS PIN	AXE PERNO D'ATTACCO	SPLINTBOLZEN BULON CILINDRICO
17	*4278950M92		**1**	ROD	TRINGLE ASTA	STANGE VARILLA
18	339548X1	∅ 4 X 20	**1**	PIN	GOUPILLE COPPIGLIA	STIFT PASADOR
19	357145X1		**2**	HAIR PIN	EPINGLE FORCINA	SICHERUNGSFEDER RETENEDOR ELAST
20	3010804X1	M4 X 16	**2**	SCREW	VIS VITE	SCHRAUBE TORNILLO
21	339761X1	M8 X 25	**2**	HEX. SOCK. SCREW	VIS TETE HEX VITE PARKER	ZYLINDERSCHRAUBE TORN.CAB.HUECA
22	3019139X1	M4	**1**	NUT	ECROU DADO	MUTTER TUERCA
23	357145X1		**1**	HAIR PIN	EPINGLE FORCINA	SICHERUNGSFEDER RETENEDOR ELAST
24	3784341M2		**1**	ROD	TRINGLE ASTA	STANGE VARILLA
25	3010578X1	M5 X 10	**2**	SCREW	VIS VITE	SCHRAUBE TORNILLO
26	391883X1	M5 X 25	**1**	HEX. SOCK. SCREW	VIS TETE HEX VITE PARKER	ZYLINDERSCHRAUBE TORN.CAB.HUECA

Throttle Controls
Commande D'Acceleration
Kraftstoffregelung
Comandi Acceleratore
Mandos Acelerador

10-235

1-WC14-011-C

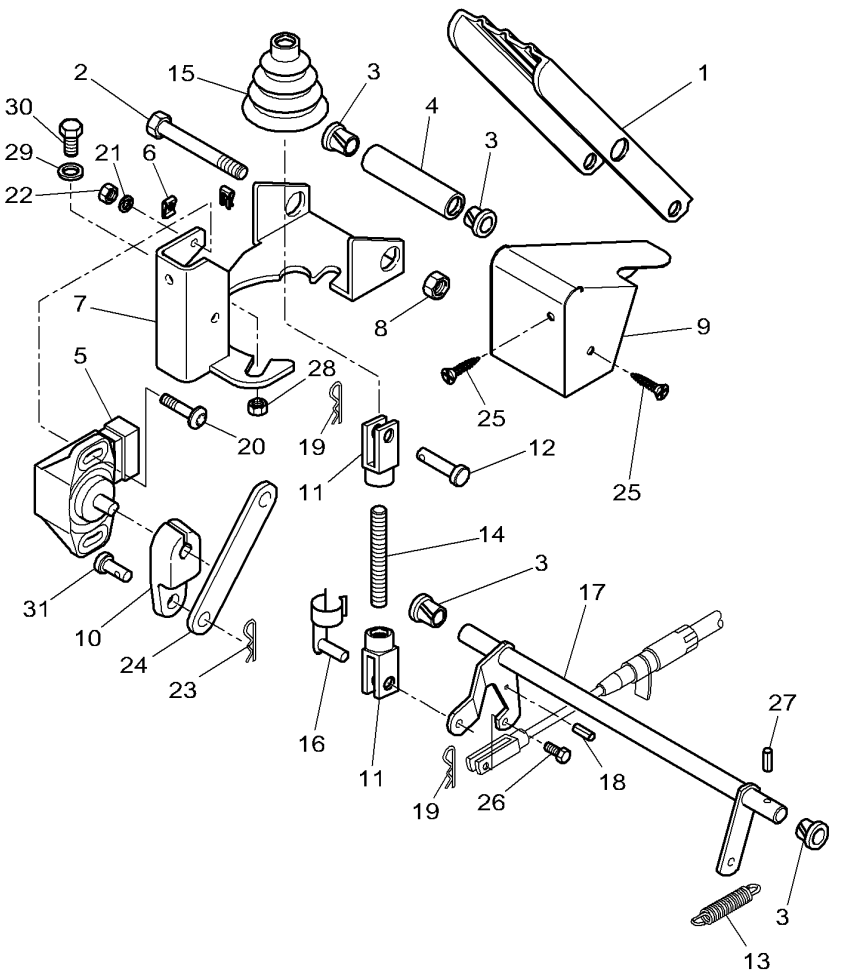

27	1442994X1	∅ 3 X 25	**2**	SPLIT PIN	GOUPILLE FENDUE COPIGLIA	SPALTBOLZEN PASADOR HENDIDO
28*	394367X1	M8	**2**	NUT	ECROU DADO	MUTTER TUERCA
29	390972X1	∅ 8-17 X 1,7	**2**	FLAT WASHER	RONDELLE PLATE RONDELLE PIANA	UNTERLEGSCHEIBEN ARANDELA PLANA
30	339123X1	M8 X 20	**2**	HEX. SOCK. SCREW	VIS TETE HEX VITE PARKER	ZYLINDERSCHRAUBE TORN.CAB.HUECA
31	3007850X1	∅ 6 X 12	**1**	CLEVIS PIN	AXE PERNO D'ATTACCO	SPLINTBOLZEN BULON CILINDRICO

20

Front Spacer
Carter Entretoise Avant
Vorderer Spacer
Distanziale Anteriore
Espaciador Delantero

20-5

1-WD02-015-A

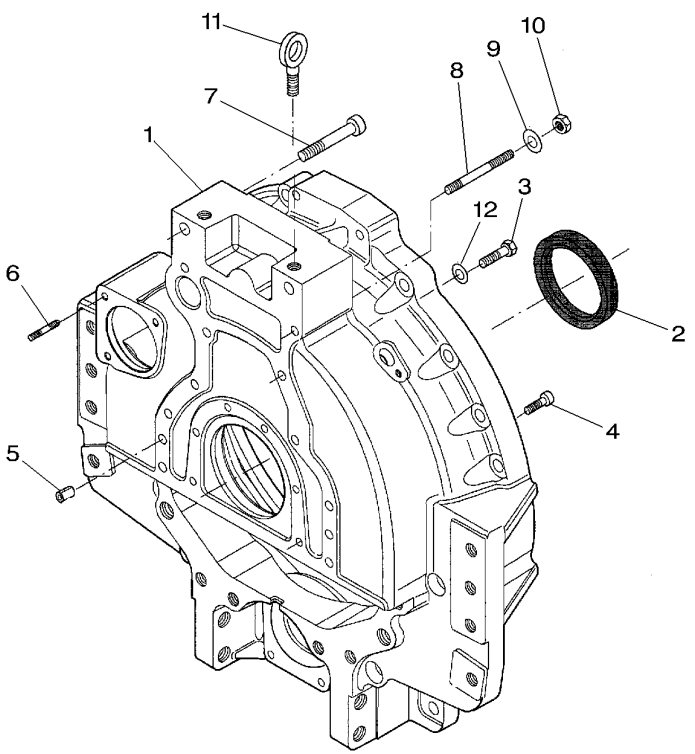

1	V836866842		**1**	HOUSING	CARTER CARCASSA	GEHAEUSE ALOJAMIENTO
2	V836840884		**1**	OIL SEAL	BAGUE ETANCHEITE BOCCOLA PARAOLIO	OELDICHTRING BUJE RETENACEITE
2	V836020054	⧗ 2MM	**X**	SPACER	ENTRETOISE DISTANZIALE	ABSTANDSTUECK DISCO ESPACIADOR
3	V528702230	M12X40	**8**	SCREW	VIS VITE	SCHRAUBE TORNILLO
4	V581705030	M10X30	**6**	SCREW	VIS VITE	SCHRAUBE TORNILLO
5	V598359850		**2**	PIN	GOUPILLE COPPIGLIA	STIFT PASADOR
6	V546801815	M10X30	**3**	STUD	GOUJON SPINOTTO FILETT.	STEHBOLZEN ESPARRAGO ROSCA.
7	V581706370	M16X100	**2**	SCREW	VIS VITE	SCHRAUBE TORNILLO
8	V546802350	M12X100	**2**	STUD	GOUJON SPINOTTO FILETT.	STEHBOLZEN ESPARRAGO ROSCA.
9	V500051302		**2**	WASHER	RONDELLE RONDELLA	SCHEIBE ARANDELA
10	V504601200	M12	**2**	NUT	ECROU DADO	MUTTER TUERCA
11	V836640752		**1**	SHACKLE	MANILLE ANELLO TRAZIONE	SCHAEKEL TRABA
12	V500951200		**8**	WASHER	RONDELLE RONDELLA	SCHEIBE ARANDELA

Front Spacer
Carter Entretoise Avant
Vorderer Spacer
Distanziale Anteriore
Espaciador Delantero

20-10

1-WD02-014-A

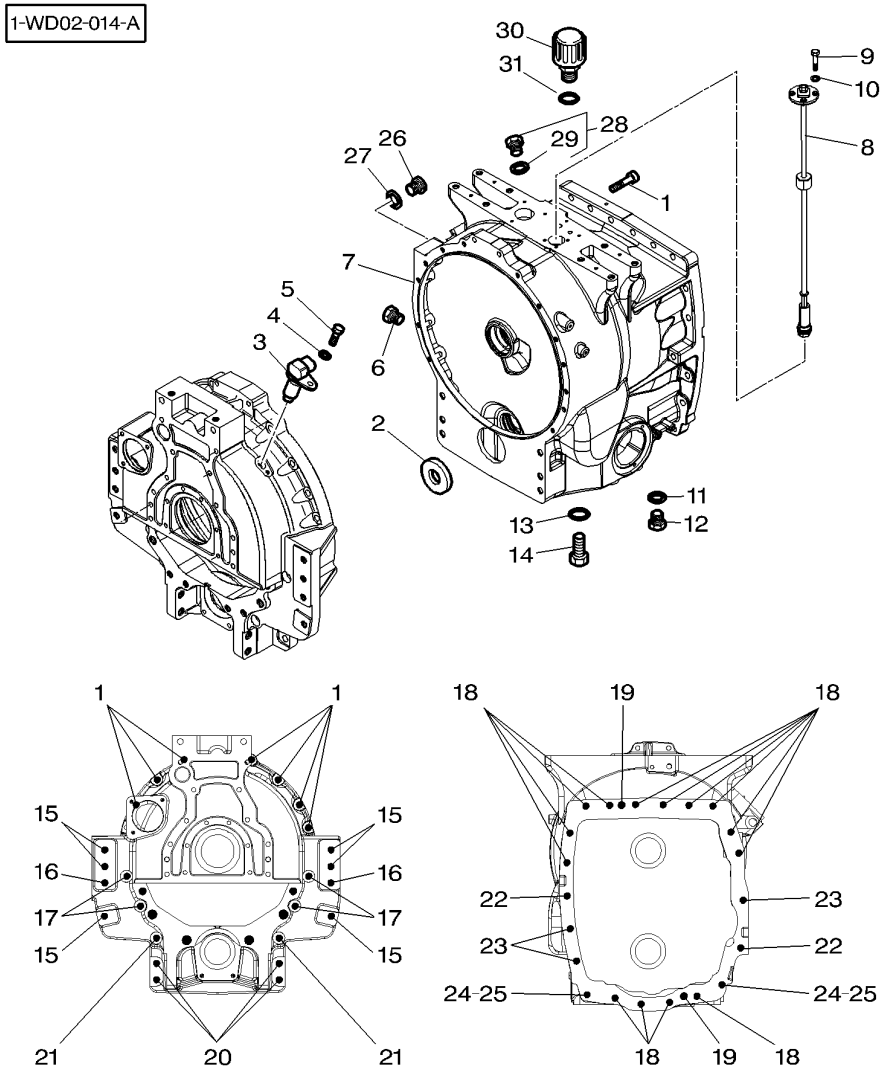

1	3011279X1	M12 X 60	**9**	SCREW	VIS VITE	SCHRAUBE TORNILLO
2	816920011031		**1**	DISC	DISQUE DISCO	SCHEIBE DISCO
3	**G816970020040**		**1**	HALL SENSOR	CAPTEUR DE HALL HALL SENSOR	HALL-GEBER HALL SENSOR
4	339374X1		**1**	LOCK WASHER	RONDELLE FREIN RONDELLA ARRESTO	SICHERUNGSRING ARANDELA SEGURID
5	3009285X1	M8 X 16	**1**	SCREW	VIS VITE	SCHRAUBE TORNILLO
6	4278268M1		**1**	PLUG	BOUCHON TAPPO	STOPFEN TAPON
7	903100050031		**1**	SPACER	ENTRETOISE DISTANZIALE	ABSTANDSTUECK DISCO ESPACIADOR
8	G916970020021		**1**	FUEL TRANSMITTER	CAPTEUR NIVEAU FUEL TRANSMITTER	VORRATZGEBER FUEL TRANSMITTER
9	339721X1	M5 X 16	**4**	HEX. SOCK. SCREW	VIS TETE HEX VITE PARKER	ZYLINDERSCHRAUBE TORN.CAB.HUECA
10	3019560X1		**4**	WASHER	RONDELLE RONDELLA	SCHEIBE ARANDELA
11	X540008278000	26 X 31	**1**	RING	ANNEAU ANELLO	RING. ANILLO
12	X483803200000	M26 X 1,5	**1**	PLUG	BOUCHON TAPPO	STOPFEN TAPON
13	**X540009478000**	30 X 36 X 2	**1**	RING	ANNEAU ANELLO	RING. ANILLO
14	916101050100	M30 X 1,5	**1**	SCREW	VIS VITE	SCHRAUBE TORNILLO
15	3010556X1	M20 X 70	**6**	SCREW METRIC	VIS METRIQUE VITE METRICA	SCHRAUBE METR TORNILLO METRICO
16	3714795M1		**2**	CENTRALISER	PION CENTRALIZZATORE	FUEHRUNGSKORB CENTRALIZADOR
17	3011281X1	M12 X 150	**4**	SCREW	VIS VITE	SCHRAUBE TORNILLO
18	3009930X1	M16 X 70	**14**	BOLT	BOULON BULLONE	BOLZEN BULON
19	X505578900000		**2**	DOWEL	PLOT SPINA	ZYLINDERSTIFT CENTRAJE
20	3011023X1	M18 X 65	**4**	SCREW	VIS VITE	SCHRAUBE TORNILLO
21	3011282X1	M18 X 150	**2**	SCREW	VIS VITE	SCHRAUBE TORNILLO
22	3019874X1	M16 X 115	**2**	SCREW METRIC	VIS METRIQUE VITE METRICA	SCHRAUBE METR TORNILLO METRICO
23	3010007X1	M16 X 60	**3**	SCREW METRIC	VIS METRIQUE VITE METRICA	SCHRAUBE METR TORNILLO METRICO
24	3011610X1	M16 X 70,24	**2**	STUD	GOUJON SPINOTTO FILETT.	STEHBOLZEN ESPARRAGO ROSCA.
25	3019871X1	M16	**2**	NUT SPECIAL	ECROU SPECIAL DADO SPECIALE	SPEZIALMUTTER TUERCA ESPECIAL
26	X483803201000	M26X1,5	**1**	SCREW	VIS VITE	SCHRAUBE TORNILLO

Front Spacer
Carter Entretoise Avant
Vorderer Spacer
Distanziale Anteriore
Espaciador Delantero

20-10

1-WD02-014-A

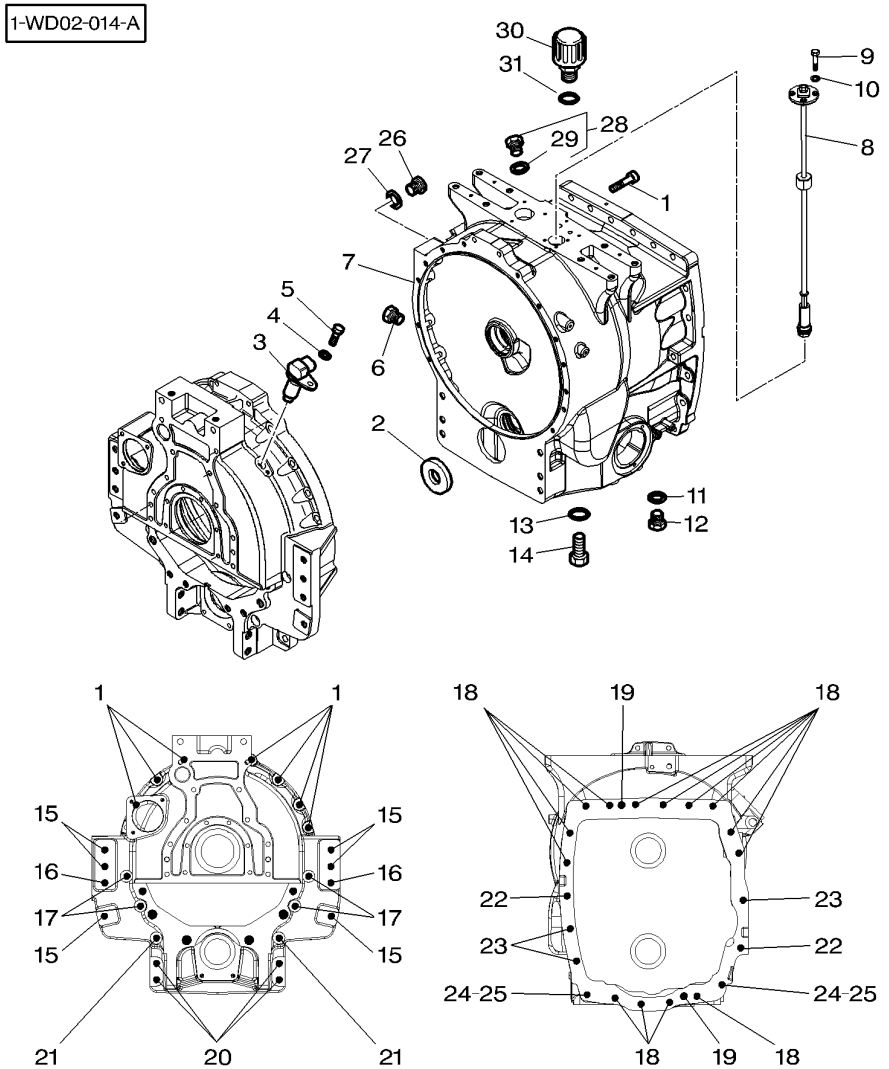

27	X540008278000	26X31	**1**	RING	ANNEAU ANELLO	RING. ANILLO
28	3011105X91	M22X1,5	**4**	PLUG	BOUCHON TAPPO	STOPFEN TAPON
29	3011036X1	28	**1**	SEAL	JOINT ETANCHEITE GIUNTO ROTONDO	DICHTRING JUNTA REDONDA
30	3716934M1		**1**	BREATHER	RENIFLARD SFIATATOIO	ENTLUEFTER RESPIRADERO
31	3011495X1		**1**	BUSH	BAGUE BOCCOLA	RING CASQUILLO

Flywheel & Flywheel Housing
Volant Moteur & Carter De Volant
Schwungrad & Schwungradgehaeuse
Volano & Carcassa Volano
Volante & Carter Del Volante

20-15

1-WA07-016-B

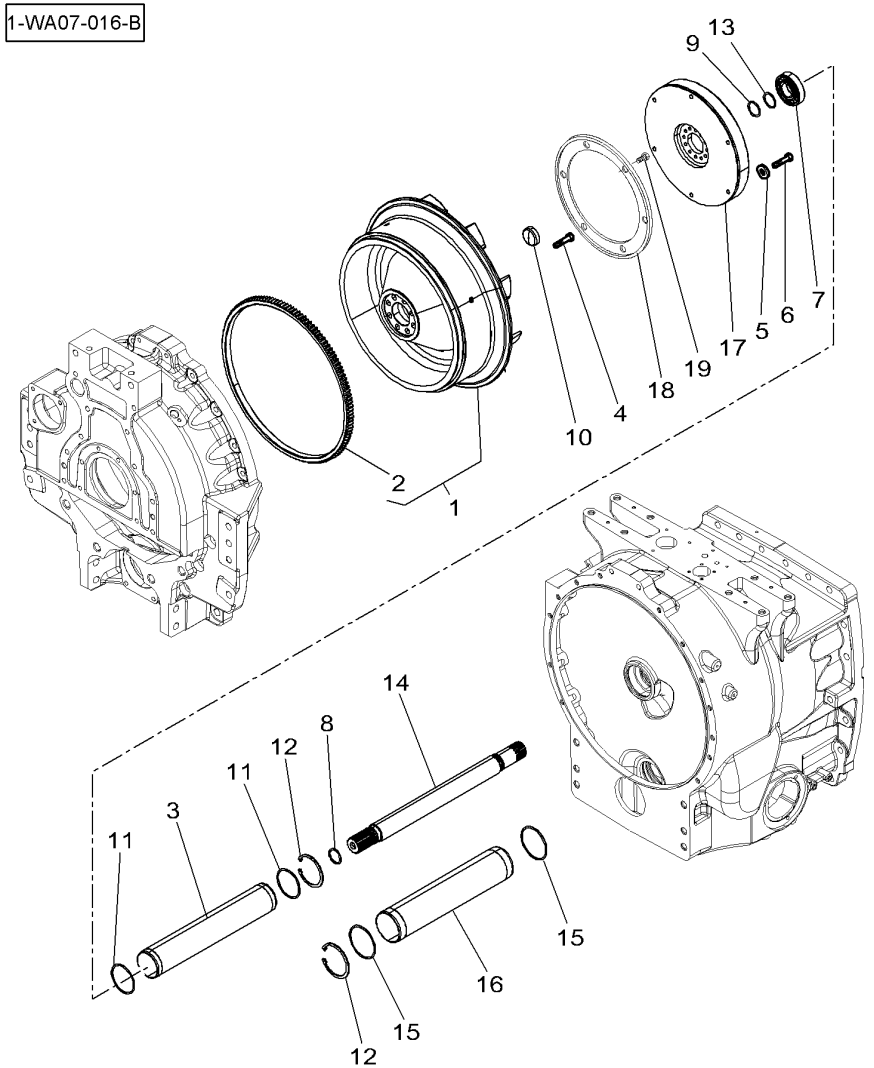

1 *	V836867568	➡| S19673	**1**	FLYWHEEL	VOLANT MOTEUR VOLANO MOTORE	SCHWUNGRAD VOLANTE MOTOR
1 *	V836867995	➡ S19674		**1**	FLYWHEEL	VOLANT MOTEUR VOLANO MOTORE	SCHWUNGRAD VOLANTE MOTOR
2	V836659026	1		**1**	ANNULAR GEAR	COURONNE CORONA DENTATA	ZAHNKRANZ ENGRANAJE ANULAR
3	916100050060	∅ 70 X 3		**1**	PIPE	TUYAU TUBO	TUBE TUBO
4	V581705850	M14 X 40		**8**	SCREW	VIS VITE	SCHRAUBE TORNILLO
5	390734X1			**6**	FLAT WASHER	RONDELLE PLATE RONDELLE PIANA	UNTERLEGSCHEIBEN ARANDELA PLANA
6	3010842X1	M10 X 60		**6**	HEX. SOCK. SCREW	VIS TETE HEX VITE PARKER	ZYLINDERSCHRAUBE TORN.CAB.HUECA
7	**833059M1**			**1**	BEARING	COUSSINET CUSCINETTO	LAGER COJINETE
8	X548892900000			**1**	O RING	JOINT TORIQUE GIUNTO DI TENUTA	O-RING JUNTA TOROIDAL
9	X548901801000	∅ 36,2 X 3		**1**	O RING	JOINT TORIQUE GIUNTO DI TENUTA	O-RING JUNTA TOROIDAL
10	4271289M1			**1**	PLUG	BOUCHON TAPPO	STOPFEN TAPON
11	X548953366000	∅ 69,44 X 3,53		**2**	O RING	JOINT TORIQUE GIUNTO DI TENUTA	O-RING JUNTA TOROIDAL
12	339437X1	∅ 80MM		**2**	CIRCLIP	CIRCLIP ANNELLO ELASTICO	SEEGERING GRAPA CIRCULAR
13	339820X1	∅ 40 X 1,5		**1**	CIRCLIP	CIRCLIP ANNELLO ELASTICO	SEEGERING GRAPA CIRCULAR
14	916100421100			**1**	DRIVE SHAFT	ARBRE DE CDE ALBERO TRASMISS.	ANTRIEBSWELLE EJE MOTRIZ
15	X548963400000	∅ 78,97 X 3,53		**2**	O RING	JOINT TORIQUE GIUNTO DI TENUTA	O-RING JUNTA TOROIDAL
16	916100050070	∅ 80 X 2,5		**1**	PIPE	TUYAU TUBO	TUBE TUBO
17 *	916100421052	➡| MT655B-17-DEC-06 ➡| MT665B-11-DEC-06		**1**	HYDRAU DAMPER	AMORTISSEUR HYD AMMORTIZ IDROLIC	HYDRODAMP AMORTIG HIDRAU
17 *	E931100420010	➡ MT655B-18-DEC-06 ➡ MT665B-12-DEC-06		**1**	HYDRAU DAMPER	AMORTISSEUR HYD AMMORTIZ IDROLIC	HYDRODAMP AMORTIG HIDRAU
18 *	V836867997	➡ S19674		**1**	RING	ANNEAU ANELLO	RING. ANILLO
19 *	V528801750	➡ S19674 M10 X 12		**6**	SCREW	VIS VITE	SCHRAUBE TORNILLO

Clutch Control
Commande De L'Embrayage
Kupplungsbetatigung
Comando Della Frizione
Mando Del Embrague

20-20

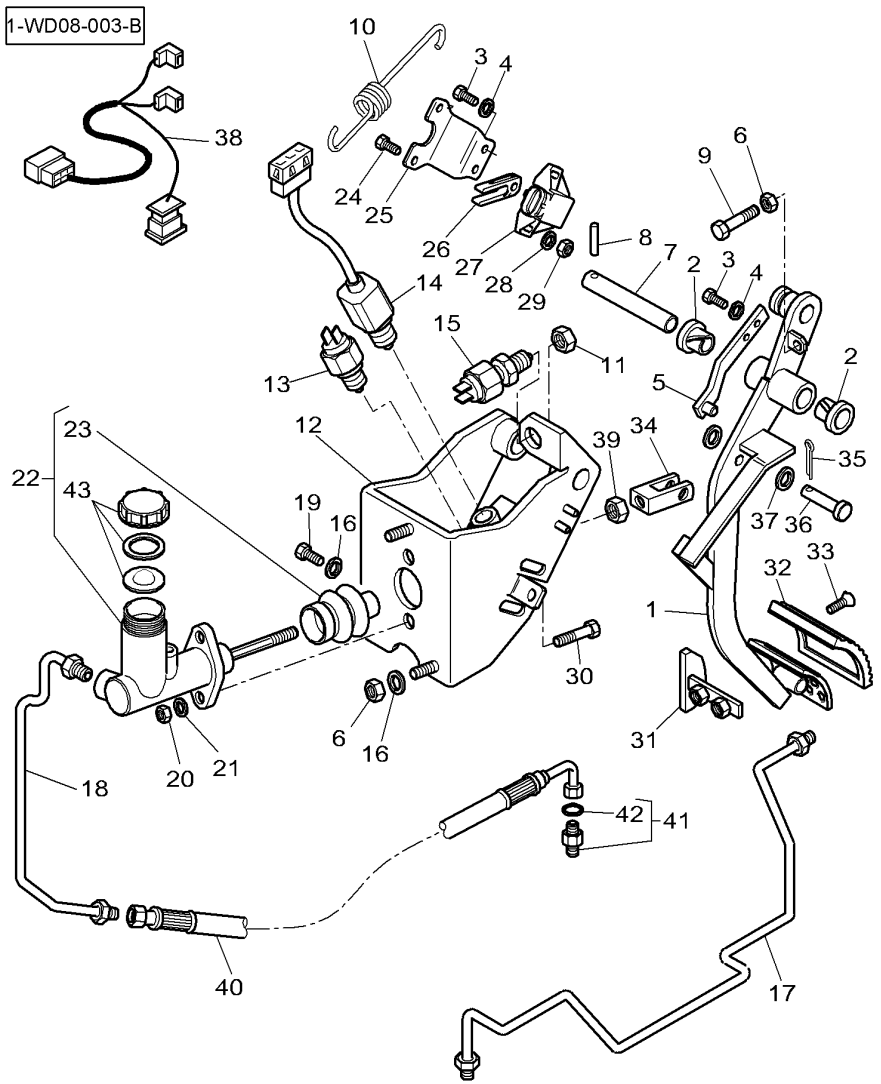

1	3785645M5		**1**	PEDAL	PEDALE PEDALE	PEDAL PEDAL
2	3385604M1		**2**	BEARING	COUSSINET CUSCINETTO	LAGER COJINETE
3	3009281X1	M6 X 16	**4**	SCREW	VIS VITE	SCHRAUBE TORNILLO
4	390971X1	∅ 6-12 X 1,5	**4**	FLAT WASHER	RONDELLE PLATE RONDELLE PIANA	UNTERLEGSCHEIBEN ARANDELA PLANA
5	4270193M1		**1**	STRAP	PATTE CORREGGIA	LASCHE FAJA
6	339169X1	M8	**3**	NUT	ECROU DADO	MUTTER TUERCA
7	3780939M1	∅ 15 X 100	**1**	CLEVIS PIN	AXE PERNO D'ATTACCO	SPLINTBOLZEN BULON CILINDRICO
8	391290X1	∅ 5 X 30	**1**	PIN	GOUPILLE COPPIGLIA	STIFT PASADOR
9	4271907M1	M8 X 25	**1**	SCREW	VIS VITE	SCHRAUBE TORNILLO
10	3788068M1		**1**	SPRING	RESSORT MOLLA	FEDER MUELLE
11	339070X1	M14	**1**	NUT	ECROU DADO	MUTTER TUERCA
12	4271987M1		**1**	SUPPORT	SUPPORT SOPPORTO	TRAGER SOPORTE
13	**4272778M1**		**1**	SWITCH,INDIRECT	CONTACTEUR INTERRUTTORE IND	KONTAKTSCHALTER CONTACTOR
14	**3783832M2**		**1**	SWITCH,INDIRECT	CONTACTEUR INTERRUTTORE IND	KONTAKTSCHALTER CONTACTOR
15	**4271809M1**		**1**	SWITCH,INDIRECT	CONTACTEUR INTERRUTTORE IND	KONTAKTSCHALTER CONTACTOR
16	390972X1	∅ 8-17 X 1,7	**3**	FLAT WASHER	RONDELLE PLATE RONDELLE PIANA	UNTERLEGSCHEIBEN ARANDELA PLANA
17	4275085M2		**1**	TUBE	TUBE TUBO.	ROHR TUBO.
18	4275099M1		**1**	TUBE	TUBE TUBO.	ROHR TUBO.
19	339123X1	M8 X 20	**1**	HEX. SOCK. SCREW	VIS TETE HEX VITE PARKER	ZYLINDERSCHRAUBE TORN.CAB.HUECA
20	339402X1	M10	**2**	NUT SPECIAL	ECROU SPECIAL DADO SPECIALE	SPEZIALMUTTER TUERCA ESPECIAL
21	390734X1	∅ 10-21 X 2	**2**	FLAT WASHER	RONDELLE PLATE RONDELLE PIANA	UNTERLEGSCHEIBEN ARANDELA PLANA
22	4278077M1		**1**	MAIN CYLINDER	MAITRE CYLINDRE CILINDRO PRINCIP	HAUPTZYLINDER CILINDRO PRINCIP
23	3903845M1	22	**1**	BELLOWS	SOUFFLET SOFFIETTO	FALTENBALG FUELLE
24	3010818X1	M4 X 20	**2**	SCREW METRIC	VIS METRIQUE VITE METRICA	SCHRAUBE METR TORNILLO METRICO
25	4270192M1		**1**	STRAP	PATTE CORREGGIA	LASCHE FAJA
26	411301050040		**1**	FORK	FOURCHETTE FORCELLA	GABEL HORQUILLA

Clutch Control
Commande De L'Embrayage
Kupplungsbetatigung
Comando Della Frizione
Mando Del Embrague

20-20

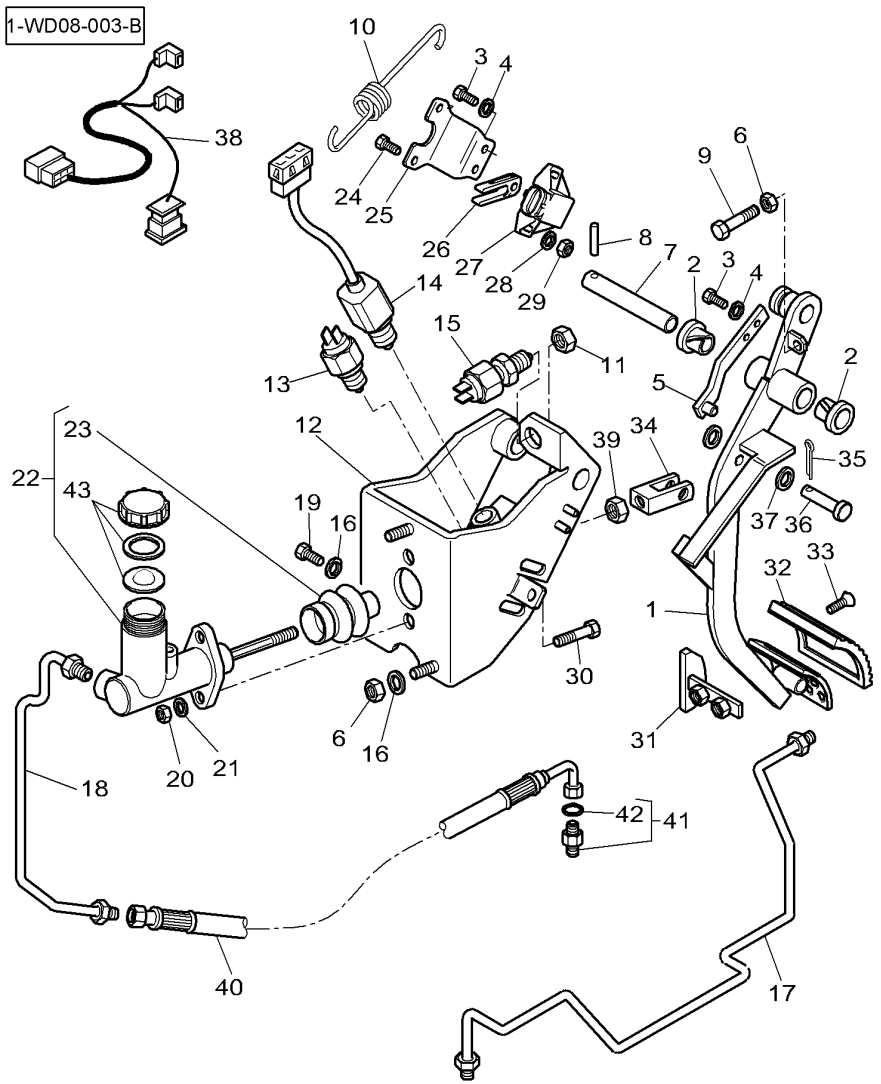

27	**3784361M1**		**1**	TRANSDUCER	CAPTEUR TRANSDUCER	NABENTRIEB. TRANSDUCER
28	390468X1	∅ 4-9 X 1	**4**	WASHER	RONDELLE RONDELLA	SCHEIBE ARANDELA
29	3019139X1	M4	**2**	NUT	ECROU DADO	MUTTER TUERCA
30	3009493X1	M10 X 30	**2**	HEX. SOCK. SCREW	VIS TETE HEX VITE PARKER	ZYLINDERSCHRAUBE TORN.CAB.HUECA
31*	3714488M4		**1**	STOP	BUTEE STOP	ANSCHLAG PARO
32	1626321M2		**1**	SKATE	PATIN PATTINO	SCHLITTEN-KUFE PATIN
33	392404X1	M5 X 16	**2**	SCREW	VIS VITE	SCHRAUBE TORNILLO
34	4278844M1		**1**	CLEVIS	CHAPE GANCIO D'ATTACCO	GABELSTUECK GANCHO SEGURI.
35	1442994X1	∅ 3 X 25	**1**	SPLIT PIN	GOUPILLE FENDUE COPIGLIA	SPALTBOLZEN PASADOR HENDIDO
36	3019214X1	∅ 12 X 40	**1**	CLEVIS PIN	AXE PERNO D'ATTACCO	SPLINTBOLZEN BULON CILINDRICO
37	1444351X1		**2**	WASHER	RONDELLE RONDELLA	SCHEIBE ARANDELA
38	3783857M1		**1**	HARNESS	FAISCEAU FASCIOCAVI	KABELBAUM MAZO CABLES
39	392310X1		**1**	NUT	ECROU DADO	MUTTER TUERCA
40*	4276159M2	◄► 1100 MM	**1**	HYDR. HOSE	FLEXIBLE TUBOFLEX IDRAUL	HYDR. SCHLAUCH TUBO HIDRAULICO
41	338716X91	M12X1,5	**1**	UNION	RACCORD RACCORDO	VERSCHRAUBUNG RACOR
42	338761X1	41	**1**	O RING	JOINT TORIQUE GIUNTO DI TENUTA	O-RING JUNTA TOROIDAL
43*	3907807M91	22	**1**	PLUG	BOUCHON TAPPO	STOPFEN TAPON

Transmission Boite De Vitesses Getriebe Trasmissione Transmision	Housing Carter Gehaeuse Carcassa Caja	25-5	

1-WE97-006-A

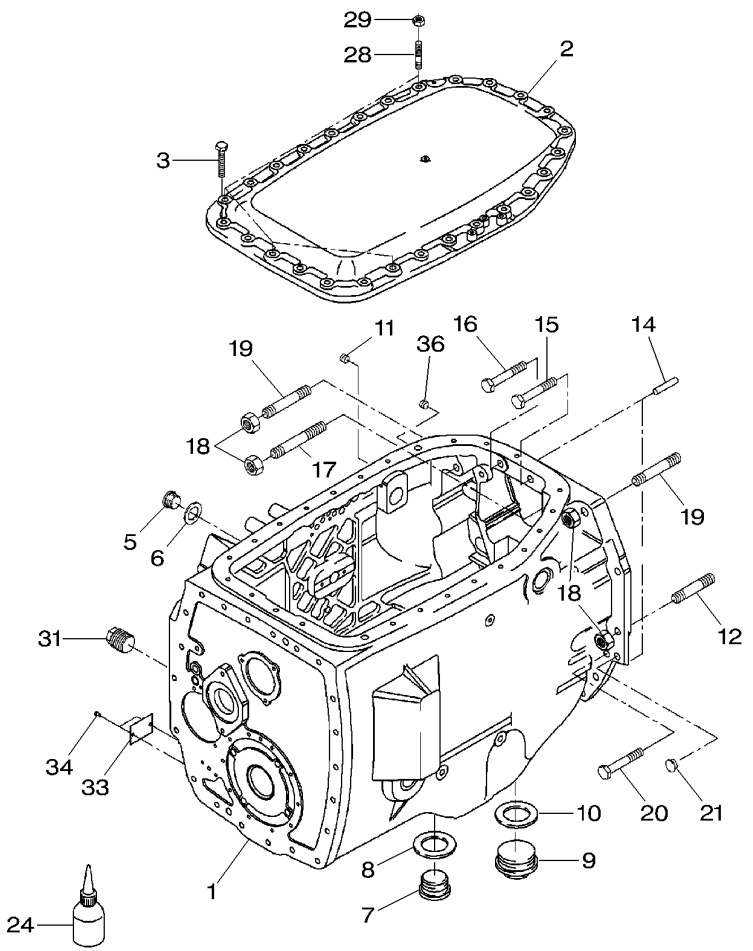

1	903100050021		**1**	TRANSM.HOUSING	CARTER BV CARCASSA TRASMIS	GETRIEBEGEHAEUSE CAJA TRANSMISION
2	916101050060		**1**	COVER	COUVERCLE COPERCHIO	ABDECKUNG. CUBIERTA
3	X487536041000	M12 X 50	**23**	SCREW	VIS VITE	SCHRAUBE TORNILLO
5	X483801200000	M16 X 1,5	**1**	SCREW	VIS VITE	SCHRAUBE TORNILLO
6	X540004878000		**1**	RING	ANNEAU ANELLO	RING. ANILLO
7	X483804801000	M33 X 2	**3**	PLUG	BOUCHON TAPPO	STOPFEN TAPON
8	X540010278000		**3**	RING	ANNEAU ANELLO	RING. ANILLO
9	X483807201000	M42 X 2	**2**	CAPSCREW	VIS BOUCHON TAPPO A VITE	HUTSCHRAUBE TORNILLO TAPON
10	X540012278000		**2**	RING	ANNEAU ANELLO	RING. ANILLO
11	X483500200000	M10	**1**	SCREW	VIS VITE	SCHRAUBE TORNILLO
12	X489145701000	M16 X 55	**2**	STUD	GOUJON SPINOTTO FILETT.	STEHBOLZEN ESPARRAGO ROSCA.
14	X505578900000	M6 X 32	**2**	DOWEL	PLOT SPINA	ZYLINDERSTIFT CENTRAJE
15	X486546301000	M16 X 80	**1**	SCREW	VIS VITE	SCHRAUBE TORNILLO
16	X486546506000	M16 X 90	**1**	SCREW	VIS VITE	SCHRAUBE TORNILLO
17	X489148906000	M16 X 110	**2**	STUD	GOUJON SPINOTTO FILETT.	STEHBOLZEN ESPARRAGO ROSCA.
18	X428204005000	M16	**7**	NUT	ECROU DADO	MUTTER TUERCA
19	X489146201000	M16 X 75	**3**	STUD	GOUJON SPINOTTO FILETT.	STEHBOLZEN ESPARRAGO ROSCA.
20	X487545606000	M16 X 60	**8**	SCREW	VIS VITE	SCHRAUBE TORNILLO
21	X499502495000		**3**	PLUG	BOUCHON TAPPO	STOPFEN TAPON
24	X903050074000		**X**	LOCTITE	LOCTITE LOCTITE	LOCTITE LOCTITE
28	205100150130		**4**	STUD	GOUJON SPINOTTO FILETT.	STEHBOLZEN ESPARRAGO ROSCA.
29	X428203241000	M12	**4**	NUT	ECROU DADO	MUTTER TUERCA
31	926110050010		**1**	SCREW	VIS VITE	SCHRAUBE TORNILLO
33	903100050110		**1**	IDENTITY PLATE	PLAQUE DE TYPE PIASTRA IDENTIF.	TYPENSCHILD PLACA IDENTIF.
34	X419432887000		**2**	NAIL, NOTCHED	CLOU CRANTE CHIODO	KERBNAGEL GARRA DENTADA
36	X483500200000	M10 X 1	**2**	SCREW	VIS VITE	SCHRAUBE TORNILLO

Gear Box
Boite De Vitesses
Getriebe
Trasmissione
Caja Del Velocidades

25-10

1-WG89-001-A

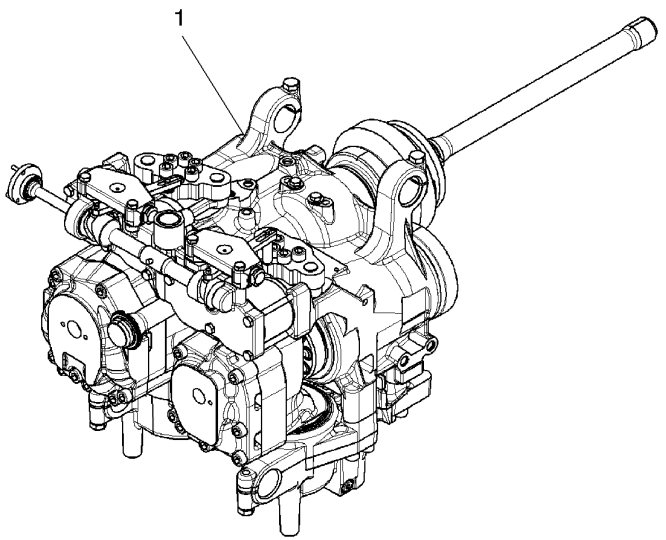

1	0099047000000		**1**	GEARBOX ML 200	BOITE VIT. ML200 SCAT.CAMB. ML200	TRIEBBLOCK ML200 CAJA CAMB. ML200
1	Z099047000000	[A]	**1**	GEARBOX ML 200	BOITE VIT. ML200 SCAT.CAMB. ML200	TRIEBBLOCK ML200 CAJA CAMB. ML200

[A] STANDARD EXCHANGE
ECHANGE STANDARD
STANDARD-AUSTAUSCH-VERKEHR
SCAMBIO STANDARD
INTERCAMBIO NORMAL

Inner Housing
Carter Interieur
Innengehaeuse
Scatola Interna
Carter Interior

25-15

1-WG67-002-A

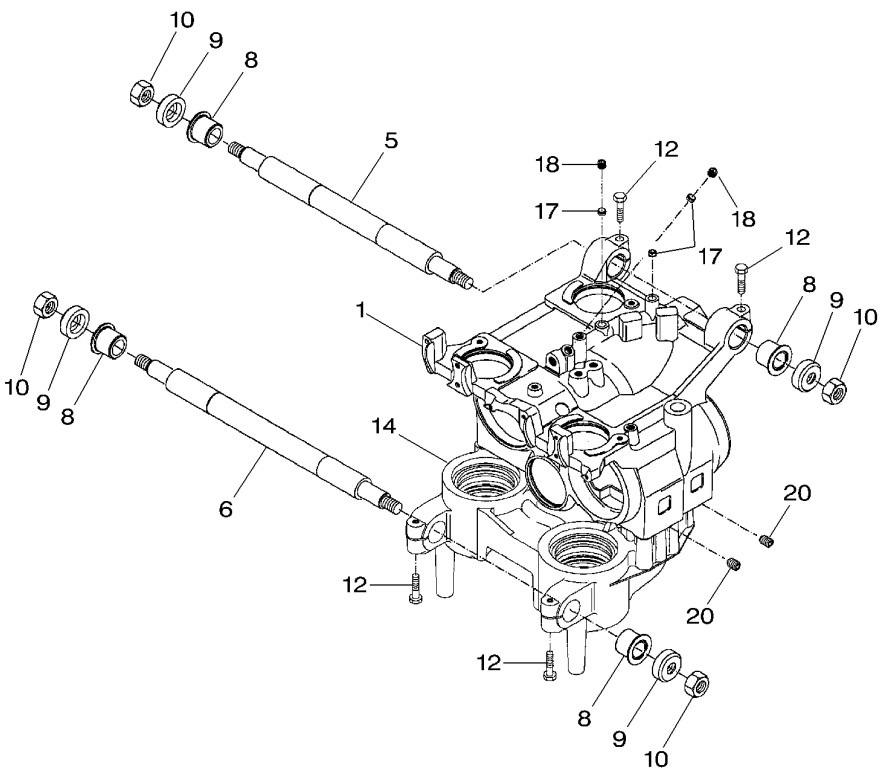

1		[A] 25-10 No 1	**1**	HOUSING	CARTER CARCASSA	GEHAEUSE ALOJAMIENTO
5	916100630011		**1**	SHAFT	ARBRE ALBERO	WELLE ARBOL
6	916100630020		**1**	SHAFT	ARBRE ALBERO	WELLE ARBOL
8	H916100630010		**4**	BUSH	BAGUE BOCCOLA	RING CASQUILLO
9	916100630030		**4**	RING	ANNEAU ANELLO	RING. ANILLO
10	X434105040000	M20	**4**	NUT	ECROU DADO	MUTTER TUERCA
12		[A]	**4**	HEX. SOCK. SCREW	VIS TETE HEX VITE PARKER	ZYLINDERSCHRAUBE TORN.CAB.HUECA
14		25-45 No 1	**1**	PLATE	PLAQUE PIASTRA	PLATTE PLATO
17		[A]	**3**	NOZZLE	NEZ INJECTEUR INIETTORE	DUESE TOBERA
18		[A] M12 X 1,5	**3**	PLUG	BOUCHON TAPPO	STOPFEN TAPON
20		[A]	**2**	SCREW	VIS VITE	SCHRAUBE TORNILLO

[A] NOT SUPPLIED SEPARATELY
NON FOURNI SEPAREMENT
NICHT MITGELIEFERT BESTELLEN
NON SERVITO SEPARATAMENTE
NO SUMINISTRADOSEPARADAMENTE

Planetary Drive
Train Planetaire
Planetentrieb
Riduttore Planetario
Transmision Planetaria

25-20

1-WG68-002-A

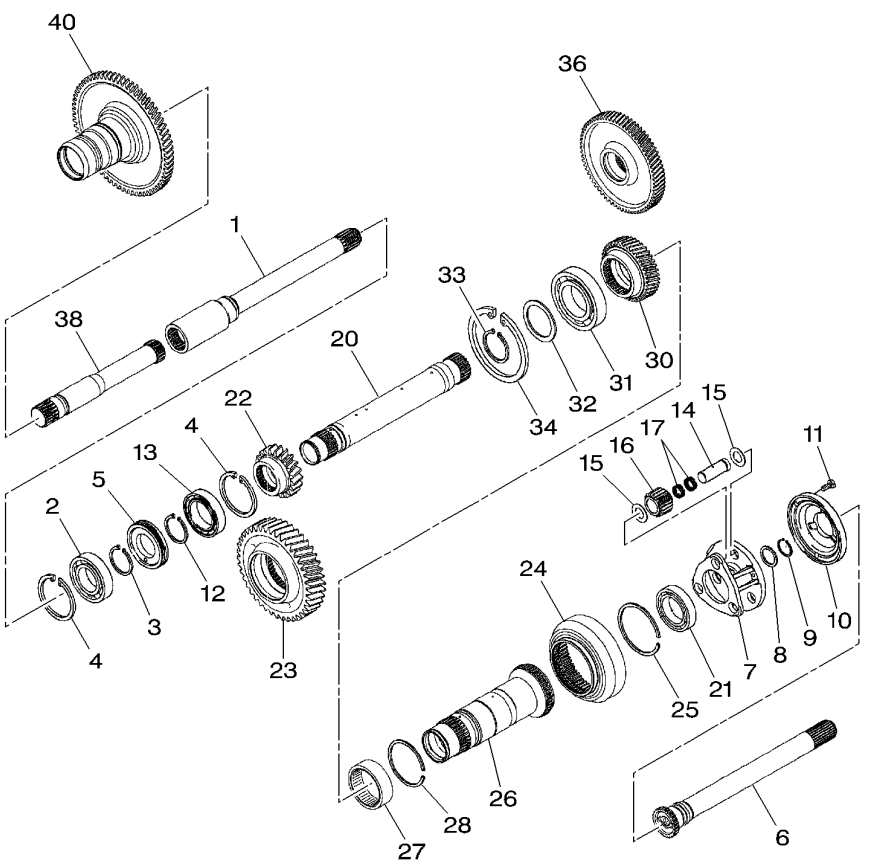

1		[A]	**1**	SHAFT	ARBRE ALBERO	WELLE ARBOL
2		[A]	**1**	BEARING ASSY	ROULEMENT CUSCINETTO COMPL	RADIALLAGER RODAMIENTO RAD
3		[A]	**1**	CIRCLIP	CIRCLIP ANNELLO ELASTICO	SEEGERING GRAPA CIRCULAR
4		[A]	**2**	CIRCLIP	CIRCLIP ANNELLO ELASTICO	SEEGERING GRAPA CIRCULAR
5		[A]	**1**	TUBE	TUBE TUBO.	ROHR TUBO.
6	926102080130	50-5 No 42	**1**	SHAFT	ARBRE ALBERO	WELLE ARBOL
7		[A]	**1**	CARRIER	PORTE SATELLITES SUPPORTO SATELL.	TRAEGER PORTADOR
8		[A]	**1**	CHOCK	CALE PASSACAVO	UNTERLEG-KEIL CALZA
9		[A]	**1**	CIRCLIP	CIRCLIP ANNELLO ELASTICO	SEEGERING GRAPA CIRCULAR
10	916100080181		**1**	COVER	COUVERCLE COPERCHIO	ABDECKUNG. CUBIERTA
11		[A] M8 X 25	**3**	HEX. SOCK. SCREW	VIS TETE HEX VITE PARKER	ZYLINDERSCHRAUBE TORN.CAB.HUECA
12		[A]	**1**	KIT, CIRCLIP	JEU CIRCLIPS KIT, CIRCLIP	SICHERUNGSR.SATZ KIT, CIRCLIP
13		[A]	**1**	BEARING ASSY	ROULEMENT CUSCINETTO COMPL	RADIALLAGER RODAMIENTO RAD
14		[A]	**3**	CLEVIS PIN	AXE PERNO D'ATTACCO	SPLINTBOLZEN BULON CILINDRICO
15		[A]	**6**	WASHER	RONDELLE RONDELLA	SCHEIBE ARANDELA
16		[A] 20	**3**	DIFF PINION	SATELLITE PIGNONE DIFFEREN	DIFF.KEGELRAD PINON DIFERENC
17		[A]	**6**	NEEDLE CAGE	CAGE A AIGUILLES PORTAGHI	NADELKAEFIG JUALA DE AGUJA
20		[A] 27	**1**	SHAFT	ARBRE ALBERO	WELLE ARBOL
21		[A]	**1**	BEARING ASSY	ROULEMENT CUSCINETTO COMPL	RADIALLAGER RODAMIENTO RAD
22		[A] 22	**1**	PINION	PIGNON PIGNONE	RITZEL PINON
23		25-30 No 1	**1**	SHAFT	ARBRE ALBERO	WELLE ARBOL
24		[A]	**1**	ANNULAR GEAR	COURONNE CORONA DENTATA	ZAHNKRANZ ENGRANAJE ANULAR
25		[A] ∅ 95 X 2,5	**1**	RING	ANNEAU ANELLO	RING. ANILLO
26		[A]	**1**	SHAFT	ARBRE ALBERO	WELLE ARBOL
27		[A] ∅ 68 X 25	**1**	BEARING ASSY	ROULEMENT CUSCINETTO COMPL	RADIALLAGER RODAMIENTO RAD
28		[A] ∅ 82 X 2	**1**	RING	ANNEAU ANELLO	RING. ANILLO

Planetary Drive
Train Planetaire
Planetentrieb
Riduttore Planetario
Transmision Planetaria

25-20

1-WG68-002-A

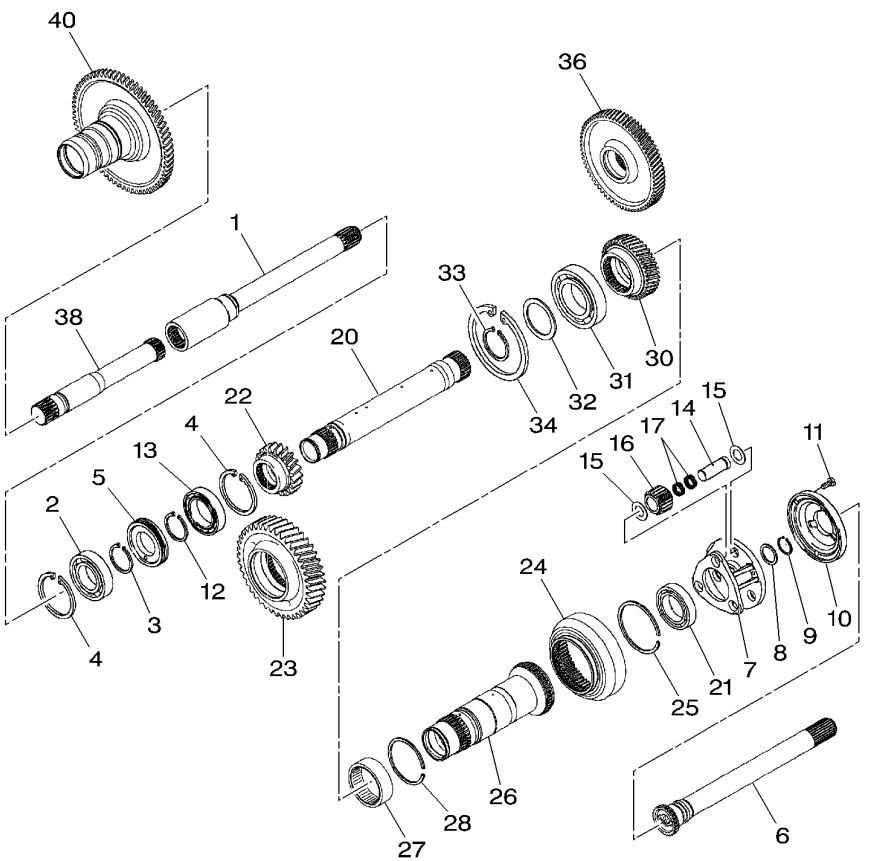

30		[A] 30	**1**	PINION	PIGNON PIGNONE	RITZEL PINON
31		[A]	**1**	BEARING ASSY	ROULEMENT CUSCINETTO COMPL	RADIALLAGER RODAMIENTO RAD
32		[A]	**1**	KIT, WASHER	JEU RONDELLES KIT RONDELLA	SCHEIBENSATZ JUEGO ARANDELAS
33		[A] ∅ 60 X 2	**1**	CIRCLIP	CIRCLIP ANNELLO ELASTICO	SEEGERING GRAPA CIRCULAR
34		[A] ∅ 110 X 4	**1**	CIRCLIP	CIRCLIP ANNELLO ELASTICO	SEEGERING GRAPA CIRCULAR
36		25-25 No 1	**1**	PINION	PIGNON PIGNONE	RITZEL PINON
38	916101080070		**1**	SHAFT	ARBRE ALBERO	WELLE ARBOL
40		70-65 No 1	**1**	PINION	PIGNON PIGNONE	RITZEL PINON

[A] NOT SUPPLIED SEPARATELY
NON FOURNI SEPAREMENT
NICHT MITGELIEFERT BESTELLEN
NON SERVITO SEPARATAMENTE
NO SUMINISTRADOSEPARADAMENTE

Pump Shaft
Arbre De Pompe
Pumpenwelle
Albero Di Pompa
Eje De Bomba

25-25

1-WG69-002-A

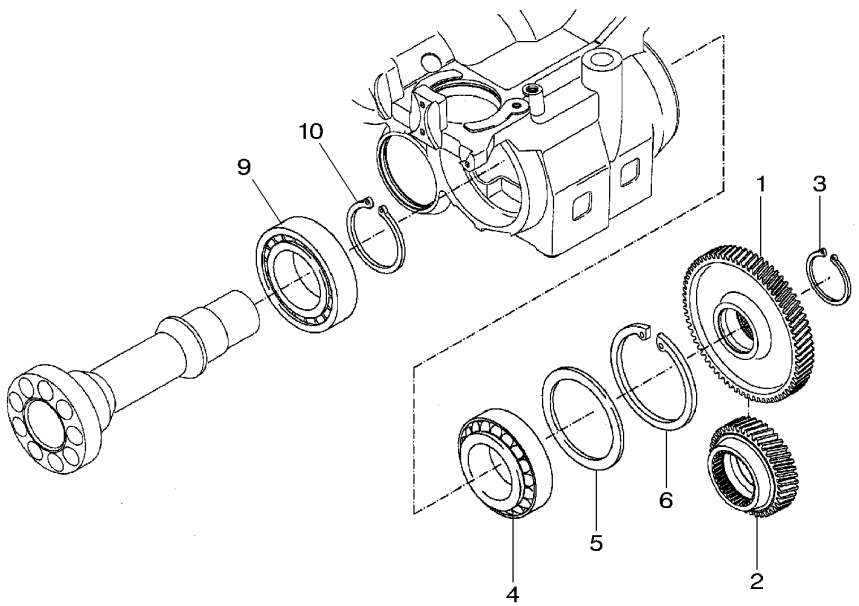

1	[A]	**1**	PINION	PIGNON PIGNONE	RITZEL PINON
	48				
2	[A]	**1**	PINION	PIGNON PIGNONE	RITZEL PINON
	25-20 No 30				
3	[A]	**1**	CIRCLIP	CIRCLIP ANNELLO ELASTICO	SEEGERING GRAPA CIRCULAR
	∅ 55 X 3				
4	[A]	**1**	BALL BEARING	ROULEMENT BILLES CUSCINETTO SFERE	KUGELLAGER COJINETE DE BOLA
5	[A]	**1**	CHOCK	CALE PASSACAVO	UNTERLEG-KEIL CALZA
6	[A]	**1**	CIRCLIP	CIRCLIP ANNELLO ELASTICO	SEEGERING GRAPA CIRCULAR
	∅ 125 X 4				
9	[A]	**1**	BEARING ASSY	ROULEMENT CUSCINETTO COMPL	RADIALLAGER RODAMIENTO RAD
10	[A]	**1**	CIRCLIP	CIRCLIP ANNELLO ELASTICO	SEEGERING GRAPA CIRCULAR

[A] NOT SUPPLIED SEPARATELY
NON FOURNI SEPAREMENT
NICHT MITGELIEFERT BESTELLEN
NON SERVITO SEPARATAMENTE
NO SUMINISTRADOSEPARADAMENTE

Accumulator Shaft
Arbre Sommateur
Summierungswelle
Albero Di Accumulo
Eje Sumatorio

25-30

1-WG70-002-A

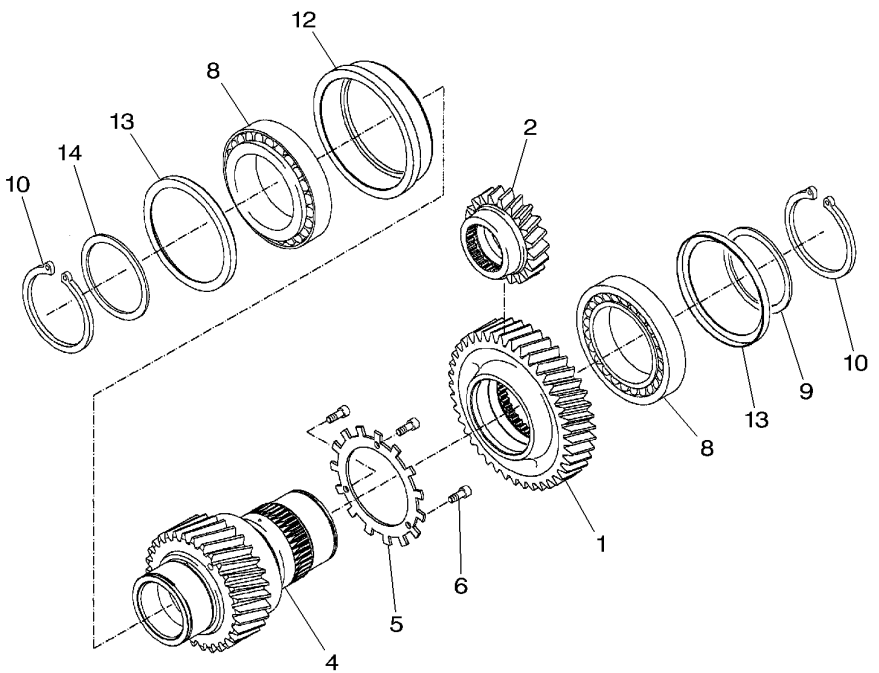

1	[A] 45	**1**	PINION	PIGNON PIGNONE	RITZEL PINON
2	25-20 No 22	**1**	PINION	PIGNON PIGNONE	RITZEL PINON
4	[A] 29	**1**	SHAFT	ARBRE ALBERO	WELLE ARBOL
5	[A]	**1**	PINION	PIGNON PIGNONE	RITZEL PINON
6	[A] M6 X 12	**3**	HEX. SOCK. SCREW	VIS TETE HEX VITE PARKER	ZYLINDERSCHRAUBE TORN.CAB.HUECA
8	[A]	**2**	BALL BEARING	ROULEMENT BILLES CUSCINETTO SFERE	KUGELLAGER COJINETE DE BOLA
9	[A]	**1**	SHIM	CALE REGLAGE SPESSORE	AUSGLEICHSCHEIBE CALCE
10	[A]	**2**	CIRCLIP	CIRCLIP ANNELLO ELASTICO	SEEGERING GRAPA CIRCULAR
12	[A]	**1**	RING	ANNEAU ANELLO	RING. ANILLO
13	[A]	**2**	SHIELD	TOLE RIPARO	SCHILD BLINDAJE
14	[A]	**1**	KIT, WASHER	JEU RONDELLES KIT RONDELLA	SCHEIBENSATZ JUEGO ARANDELAS

[A] NOT SUPPLIED SEPARATELY
NON FOURNI SEPAREMENT
NICHT MITGELIEFERT BESTELLEN
NON SERVITO SEPARATAMENTE
NO SUMINISTRADOSEPARADAMENTE

Hydraulic Pump
Pompe Hydraulique
Hydraulikpumpe
Pompa Idraulica
Bomba Hidraulica

25-35

1-WP32-003-A

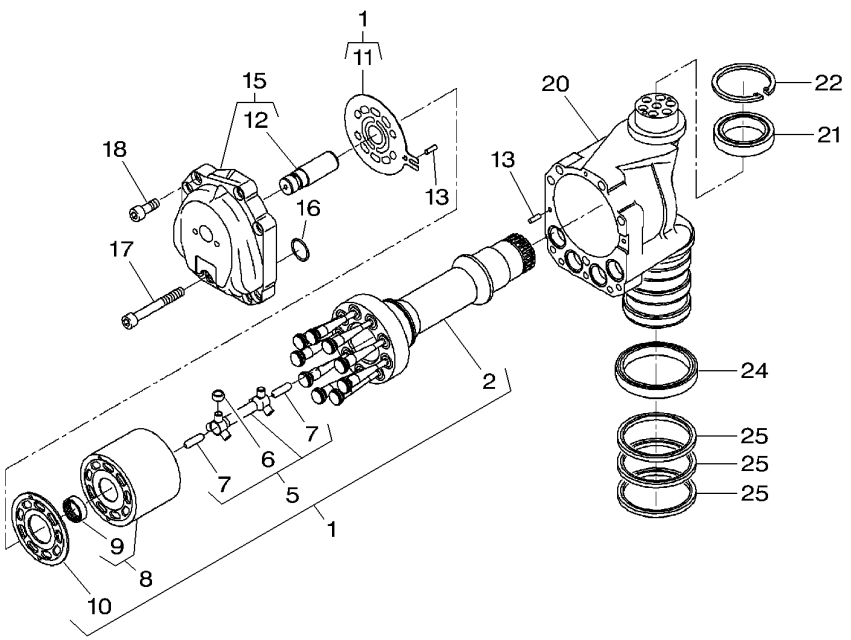

1		[A]	**1**	ASSEMBLY SET	JEU DE MONTAGES ASSEMBLY SET	EINBAUSATZ ASSEMBLY SET
2		1 [A]	**1**	SHAFT	ARBRE ALBERO	WELLE ARBOL
5		1 [A]	**1**	CLEVIS PIN	AXE PERNO D'ATTACCO	SPLINTBOLZEN BULON CILINDRICO
6		5 [A]	**1**	BUSH	BAGUE BOCCOLA	RING CASQUILLO
7		5 [A]	**1**	CLEVIS PIN	AXE PERNO D'ATTACCO	SPLINTBOLZEN BULON CILINDRICO
8		1 [A]	**1**	CYLINDER	CYLINDRE CILINDRO	ZYLINDER CILINDRO
9		8 [A]	**1**	BEARING ASSY	ROULEMENT CUSCINETTO COMPL	RADIALLAGER RODAMIENTO RAD
10		1 [A]	**1**	PLATE	PLAQUE PIASTRA	PLATTE PLATO
11	916100430311	1	**1**	PLATE	PLAQUE PIASTRA	PLATTE PLATO
12		15 REF. 15	**1**	CLEVIS PIN	AXE PERNO D'ATTACCO	SPLINTBOLZEN BULON CILINDRICO
13	X506239300000	∅ 6 X 20	**2**	DOWEL	PLOT SPINA	ZYLINDERSTIFT CENTRAJE
15	H916100430012		**1**	COVER	COUVERCLE COPERCHIO	ABDECKUNG. CUBIERTA
16	X548885102000	∅ 29,1 X 2,55	**4**	O RING	JOINT TORIQUE GIUNTO DI TENUTA	O-RING JUNTA TOROIDAL
17	X485019801000	M12 X 80	**1**	HEX. SOCK. SCREW	VIS TETE HEX VITE PARKER	ZYLINDERSCHRAUBE TORN.CAB.HUECA
18		[A] M12 X 50	**9**	HEX. SOCK. SCREW	VIS TETE HEX VITE PARKER	ZYLINDERSCHRAUBE TORN.CAB.HUECA
20	916101430101		**1**	HOUSING	CARTER CARCASSA	GEHAEUSE ALOJAMIENTO
21	X620430501000	60 X 85 X 16	**1**	BEARING	COUSSINET CUSCINETTO	LAGER COJINETE
22	X530107946000		**1**	CIRCLIP	CIRCLIP ANNELLO ELASTICO	SEEGERING GRAPA CIRCULAR
24	X622348000000	95 X 115 X 15	**1**	ROLLER BEARING	ROULEMENT GALETS CUSCINETTO RULLI	ROLLENLAGER COJINETE RODILLO
25	G916101430050		**3**	GASKET	JOINT GIUNTO PIANO	FLACHDICHTUNG JUNTA PLANA

[A] NOT SUPPLIED SEPARATELY
NON FOURNI SEPAREMENT
NICHT MITGELIEFERT BESTELLEN
NON SERVITO SEPARATAMENTE
NO SUMINISTRADOSEPARADAMENTE

Hydraulique Motor
Moteur Hydraulique
Hydromotor
Motore Idraulico
Motor Hidraulico

25-40

1-WP26-002-A

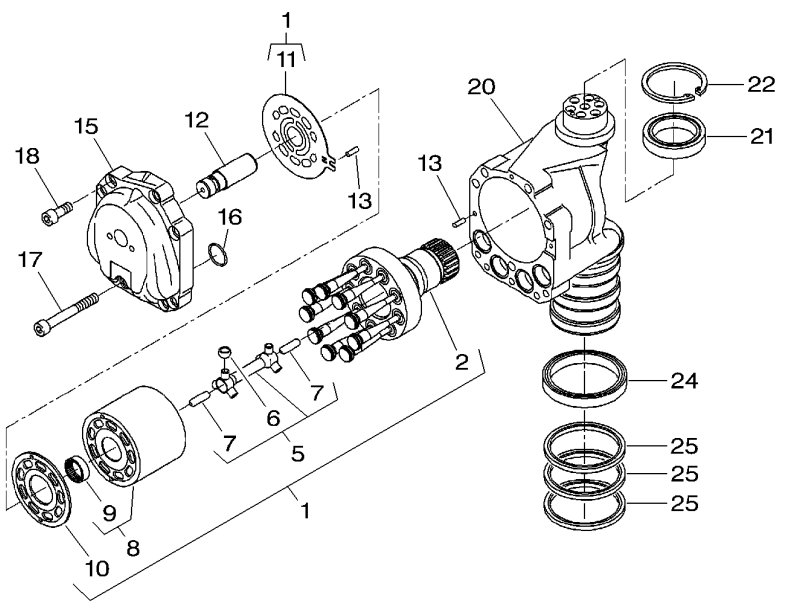

1		[A]	**1**	ASSEMBLY SET	JEU DE MONTAGES ASSEMBLY SET	EINBAUSATZ ASSEMBLY SET
2		1 [A]	**1**	SHAFT	ARBRE ALBERO	WELLE ARBOL
5		1 [A]	**1**	GASKET	JOINT GIUNTO PIANO	FLACHDICHTUNG JUNTA PLANA
6		5 [A]	**1**	BUSH	BAGUE BOCCOLA	RING CASQUILLO
7		5 [A]	**2**	CLEVIS PIN	AXE PERNO D'ATTACCO	SPLINTBOLZEN BULON CILINDRICO
8		1 [A]	**1**	CYLINDER	CYLINDRE CILINDRO	ZYLINDER CILINDRO
9		8 [A]	**1**	BEARING ASSY	ROULEMENT CUSCINETTO COMPL	RADIALLAGER RODAMIENTO RAD
10		1 [A]	**1**	PLATE	PLAQUE PIASTRA	PLATTE PLATO
11		1 [A]	**1**	PLATE	PLAQUE PIASTRA	PLATTE PLATO
12		[A]	**1**	CLEVIS PIN	AXE PERNO D'ATTACCO	SPLINTBOLZEN BULON CILINDRICO
13		[A]	**2**	PIN	GOUPILLE COPPIGLIA	STIFT PASADOR
15		[A]	**1**	COVER	COUVERCLE COPERCHIO	ABDECKUNG. CUBIERTA
16	X548885102000	29,1 X 2,55	**4**	O RING	JOINT TORIQUE GIUNTO DI TENUTA	O-RING JUNTA TOROIDAL
17		[A] M12 X 80	**1**	SCREW	VIS VITE	SCHRAUBE TORNILLO
18		[A] M12 X 50	**9**	SCREW	VIS VITE	SCHRAUBE TORNILLO
20		[A]	**1**	HOUSING	CARTER CARCASSA	GEHAEUSE ALOJAMIENTO
21		[A] 60 X 85 X 16	**1**	BEARING	COUSSINET CUSCINETTO	LAGER COJINETE
22		[A]	**1**	CIRCLIP	CIRCLIP ANNELLO ELASTICO	SEEGERING GRAPA CIRCULAR
24		[A] 95 X 115 X 15	**1**	ROLLER BEARING	ROULEMENT GALETS CUSCINETTO RULLI	ROLLENLAGER COJINETE RODILLO
25		[A]	**3**	GASKET	JOINT GIUNTO PIANO	FLACHDICHTUNG JUNTA PLANA

[A] NOT SUPPLIED SEPARATELY
NON FOURNI SEPAREMENT
NICHT MITGELIEFERT BESTELLEN
NON SERVITO SEPARATAMENTE
NO SUMINISTRADOSEPARADAMENTE

Duct Plate
Plaque De Conduite
Kanalplatte
Piastra Comando Idraulico
Placa Del Conducto

25-45

1-WG72-002-B

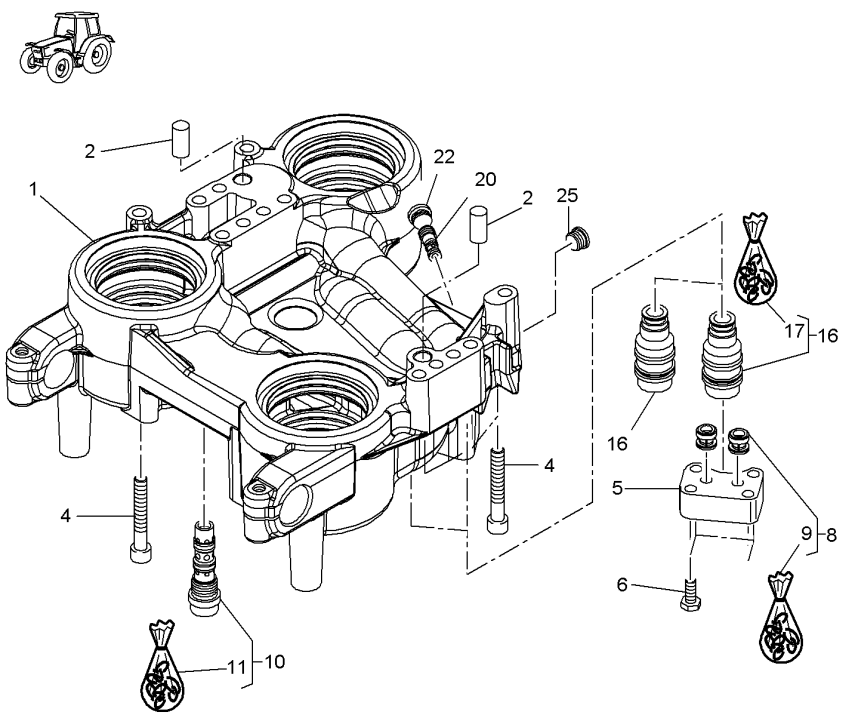

1		[A] 👁 25-10 No 1	**1**	PLATE	PLAQUE PIASTRA	PLATTE PLATO
2		[A]	**2**	PIN	GOUPILLE COPPIGLIA	STIFT PASADOR
4		[A] M12 X 80	**13**	SCREW	VIS VITE	SCHRAUBE TORNILLO
5	916100430020		**1**	FLANGE	FLASQUE FLANGIA	FLANSCH PLETINA
6		[A] M10 X 40	**4**	SCREW	VIS VITE	SCHRAUBE TORNILLO
8	X600585202000		**2**	NON RETURN VALVE	CLAPET VALVOLA NO RITOR	RUECKSCHLAGVENT. VALV.SIN RETORNO
9	X600585202010	8	**1**	KIT, JOINT	JEU JOINTS KIT GIUNTO	DICHTUNGSSATZ JUEGO JUNTAS
10	G916101430020		**1**	FLUSHING VALVE	VANNE DE PURGE FLUSHING VALVE	SPUELVENTIL FLUSHING VALVE
11	F916100430010	10	**1**	KIT, JOINT	JEU JOINTS KIT GIUNTO	DICHTUNGSSATZ JUEGO JUNTAS
16	G716100430011	●○ G716100430010	**2**	DISCHARGE VALVE	VALVE DECHARGE VALVOLA-SICUREZZ	DRUCKBEGR.VENTIL VALVULA ALIVIO
17	F716100430010	16	**1**	KIT, JOINT	JEU JOINTS KIT GIUNTO	DICHTUNGSSATZ JUEGO JUNTAS
20	G916101430030		**1**	VALVE	SOUPAPE VALVOLA	VENTIL VALVULA
22	X483900400000	M12 X 1,5	**1**	SCREW	VIS VITE	SCHRAUBE TORNILLO
25	X483900800000		**1**	SCREW	VIS VITE	SCHRAUBE TORNILLO

[A] NOT SUPPLIED SEPARATELY
NON FOURNI SEPAREMENT
NICHT MITGELIEFERT BESTELLEN
NON SERVITO SEPARATAMENTE
NO SUMINISTRADOSEPARADAMENTE

Adjusting Device
Reglage
Verstellung
Regolazione
Disposotivo Ajustable

25-50

1-WG73-003-A

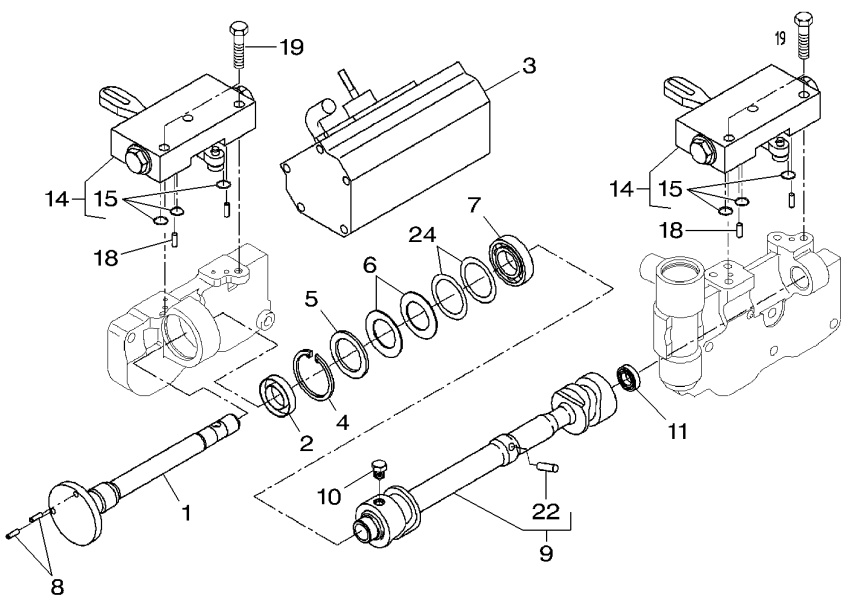

1	916101530010		**1**	SHAFT	ARBRE ALBERO	WELLE ARBOL
2	X550035200000	22 X 35 X 8/7	**1**	OIL SEAL	BAGUE ETANCHEITE BOCCOLA PARAOLIO	OELDICHTRING BUJE RETENACEITE
3		👁 25-55 No 1	**1**	CONTROL	CONTROLE CONTROLLO	STEUERUNG MANDO
4	X530105346000	∅ 42 X 1,75	**1**	CIRCLIP	CIRCLIP ANNELLO ELASTICO	SEEGERING GRAPA CIRCULAR
5	X534538146000		**2**	BACKUP RING	CONTRE BAGUE ANELLO APPOGGIO	STUETZRING ANILLA SOPORTE
6	X699239900000		**2**	CUP SPRING	RONDELLE RESSORT MOLLA CAPPELLOTT	TELLERFEDER CUBETA DE MUELLE
7	X607305302000		**1**	BALL BEARING	ROULEMENT BILLES CUSCINETTO SFERE	KUGELLAGER COJINETE DE BOLA
8*	916970160401		**2**	PEG	PORTE MANTEAU PICCHETTO	STIFT. CLAVIJA
9	H926103530020		**1**	SHAFT	ARBRE ALBERO	WELLE ARBOL
10	916100530170		**1**	SCREW	VIS VITE	SCHRAUBE TORNILLO
11	X606722501000		**1**	BALL BEARING	ROULEMENT BILLES CUSCINETTO SFERE	KUGELLAGER COJINETE DE BOLA
14	G916100530013		**2**	REGULATOR	REGULATEUR REGOLATORE	REGLER REGULADOR
15	X548823200000	14 ∅ 9,25 X 1,78	**3**	O RING	JOINT TORIQUE GIUNTO DI TENUTA	O-RING JUNTA TOROIDAL
18		[A]	**4**	PIN	GOUPILLE COPPIGLIA	STIFT PASADOR
19		[A]	**4**	HEX. SOCK. SCREW	VIS TETE HEX VITE PARKER	ZYLINDERSCHRAUBE TORN.CAB.HUECA
22	X506239300000	M6 X 20	**1**	DOWEL	PLOT SPINA	ZYLINDERSTIFT CENTRAJE
24	G001990200140		**1**	KIT, WASHER	JEU RONDELLES KIT RONDELLA	SCHEIBENSATZ JUEGO ARANDELAS

[A] NOT SUPPLIED SEPARATELY
NON FOURNI SEPAREMENT
NICHT MITGELIEFERT BESTELLEN
NON SERVITO SEPARATAMENTE
NO SUMINISTRADOSEPARADAMENTE

Transmission Control
Commande Boite De Vitesses
Getriebe-Schaltung
Comando Trasmissione
Control De Transmision

25-55

From 903/0101 - Up To 903/0300 - From 903/1001 - Up To 903/1783
A Partir Du 903/0101 - Jusqu'Au 903/0300 - A Partir Du 903/1001 - Jusqu'Au 903/1783
Ab 903/0101 - Bis 903/0300 - Ab 903/1001 - Bis 903/1783
Dalla 903/0101 - Fino 903/0300 - Dalla 903/1001 - Fino 903/1783
A Partir Del 903/0101 - Hasta 903/0300 - A Partir Del 903/1001 - Hasta 903/1783

1-WG88-001-A

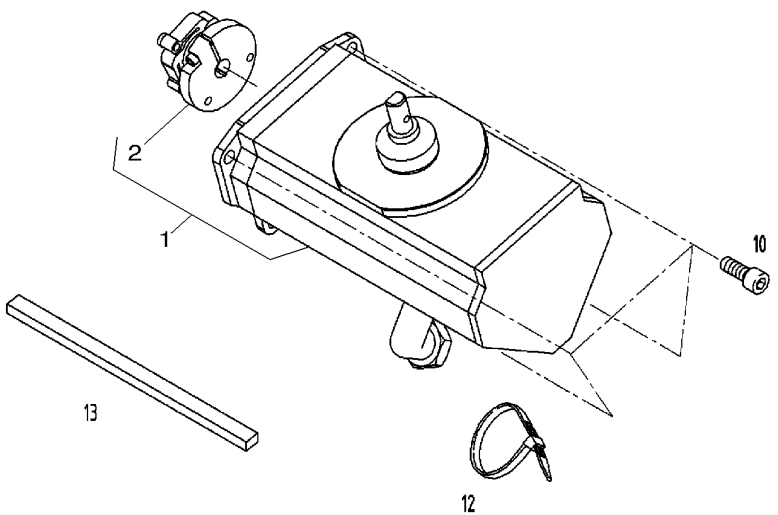

1	G701970160012		**1**	CONTROL	CONTROLE CONTROLLO	STEUERUNG MANDO
2	F916970160011	1	**1**	COUPLING	CRABOT ACCOPPIAMENTO	KUPPLUNG ACOPLAMIENTO
10	X485007301000	M8 X 20	**4**	HEX. SOCK. SCREW	VIS TETE HEX VITE PARKER	ZYLINDERSCHRAUBE TORN.CAB.HUECA
12	X668980522000		**2**	CABLE TIE	ATTACHE CABLE FASCETTA CAVI	KABELBINDER APRIETACABLES
13	X903005286000	◄► 100 MM	**X**	SEALING STRIP	BANDE D'ETANCH. SEALING STRIP	DICHTUNGSBAND SEALING STRIP

Transmission Control
Commande Boite De Vitesses
Getriebe-Schaltung
Comando Trasmissione
Control De Transmision

25-60

From 903/1784 - Up To 903/2712
A Partir Du 903/1784 - Jusqu'Au 903/2712
Ab 903/1784 - Bis 903/2712
Dalla 903/1784 - Fino 903/2712
A Partir Del 903/1784 - Hasta 903/2712

1-WG88-004-A

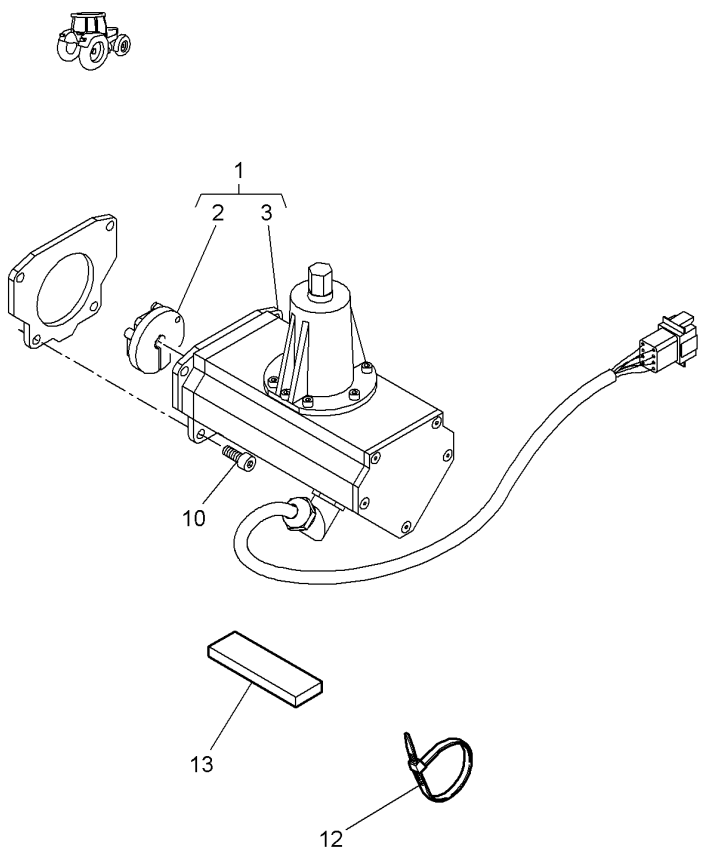

1	G701970160050		**1**	CONTROL	CONTROLE CONTROLLO	STEUERUNG MANDO
2	F916970160011	1	**1**	COUPLING	CRABOT ACCOPPIAMENTO	KUPPLUNG ACOPLAMIENTO
3	F718970160120	1	**1**	TOWER	TOURELLE TORRE	TURM TORRE
10	X485007301000	M8 X 20	**4**	HEX. SOCK. SCREW	VIS TETE HEX VITE PARKER	ZYLINDERSCHRAUBE TORN.CAB.HUECA
12	X668980522000		**2**	CABLE TIE	ATTACHE CABLE FASCETTA CAVI	KABELBINDER APRIETACABLES
13	X903005286000	◄► 100 MM	**1**	SEALING STRIP	BANDE D'ETANCH. SEALING STRIP	DICHTUNGSBAND SEALING STRIP

Transmission Control
Commande Boite De Vitesses
Getriebe-Schaltung
Comando Trasmissione
Control De Transmision

25-65

From 903/2713
A Partir Du 903/2713
Ab 903/2713
Dalla 903/2713
A Partir Del 903/2713

1-WG88-007-A

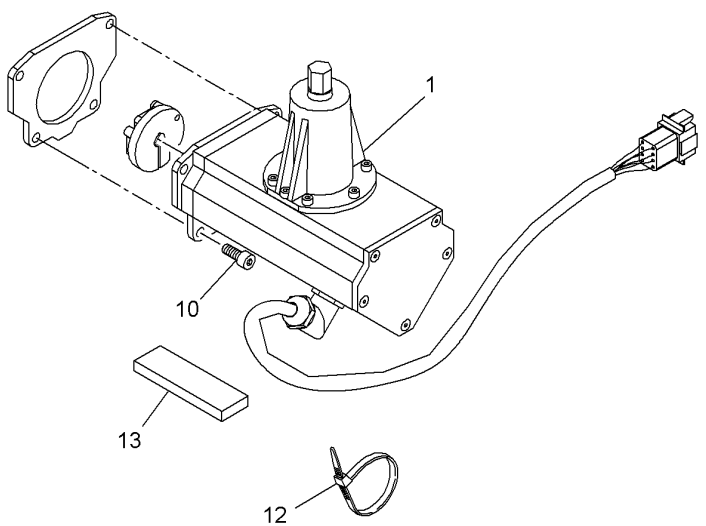

1	*	G701970160060		**1** CONTROL	CONTROLE CONTROLLO	STEUERUNG MANDO
10	*	X485007301000		**4** HEX. SOCK. SCREW	VIS TETE HEX VITE PARKER	ZYLINDERSCHRAUBE TORN.CAB.HUECA
12	*	X668980522000		**2** CABLE TIE	ATTACHE CABLE FASCETTA CAVI	KABELBINDER APRIETACABLES
13	*	X903005286995	1 X 100 MM	**X** SEALING STRIP	BANDE D'ETANCH. SEALING STRIP	DICHTUNGSBAND SEALING STRIP

Adjusting Device
Reglage
Verstellung
Regolazione
Disposotivo Ajustable

25-70

1-WG73-004-A

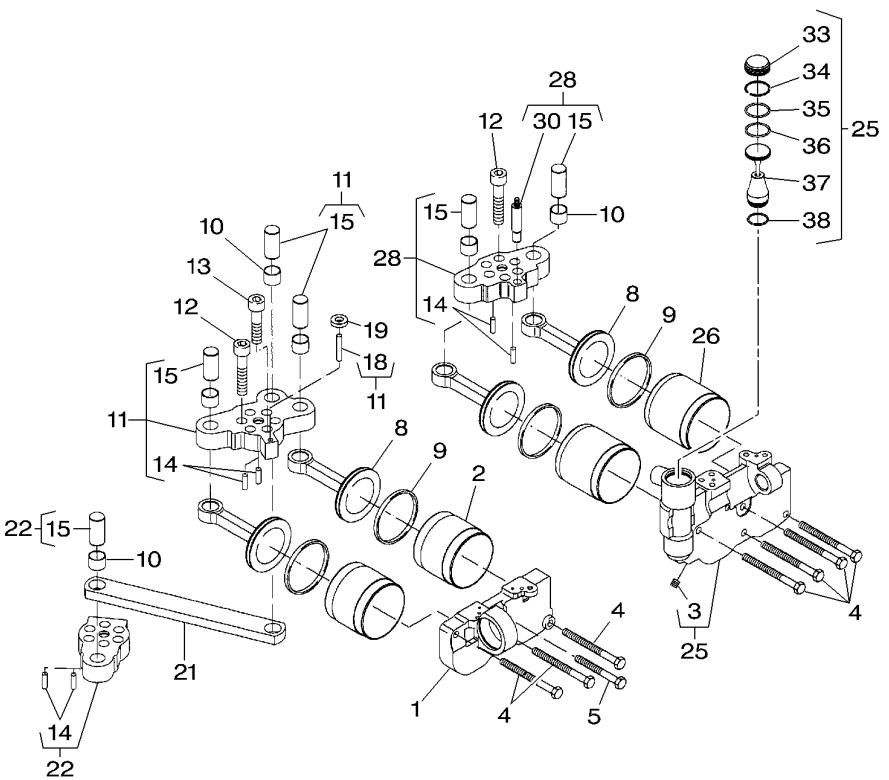

1	718100531020		**1**	HOUSING	CARTER CARCASSA	GEHAEUSE ALOJAMIENTO
2	916100530041		**2**	PIPE	TUYAU TUBO	TUBE TUBO
3		25 M8 X 8 REF. 25	**1**	HEX. SOCK. SCREW	VIS TETE HEX VITE PARKER	ZYLINDERSCHRAUBE TORN.CAB.HUECA
4		[A] M8 X 90	**7**	HEX. SOCK. SCREW	VIS TETE HEX VITE PARKER	ZYLINDERSCHRAUBE TORN.CAB.HUECA
5		[A] M8 X 70	**1**	HEX. SOCK. SCREW	VIS TETE HEX VITE PARKER	ZYLINDERSCHRAUBE TORN.CAB.HUECA
8	916101530050		**4**	PISTON	PISTON PISTONE	KOLBEN PISTON
9	X547502700000	∅ 70 X 4,2	**4**	SUMP GASKET	JOINT CARTER HUI SUMP GASKET	FORMDICHTUNG JUNTA DE PERFIL
10		[A]	**6**	BEARING	COUSSINET CUSCINETTO	LAGER COJINETE
11		[AB]	**1**	LEVER	LEVIER LEVA	HEBEL PALANCA
12		[A] M12 X 50	**17**	SCREW	VIS VITE	SCHRAUBE TORNILLO
13		[A] M12 X 40	**1**	SCREW	VIS VITE	SCHRAUBE TORNILLO
14		[A]	**6**	PIN	GOUPILLE COPPIGLIA	STIFT PASADOR
15		[A]	**6**	CLEVIS PIN	AXE PERNO D'ATTACCO	SPLINTBOLZEN BULON CILINDRICO
18		[A]	**1**	PIN	GOUPILLE COPPIGLIA	STIFT PASADOR
19		[A]	**3**	WASHER	RONDELLE RONDELLA	SCHEIBE ARANDELA
21		[A]	**1**	SHACKLE	MANILLE ANELLO TRAZIONE	SCHAEKEL TRABA
22		[AD]	**1**	LEVER	LEVIER LEVA	HEBEL PALANCA
25	H718100531010		**1**	HOUSING	CARTER CARCASSA	GEHAEUSE ALOJAMIENTO
26	916100530060		**2**	PIPE	TUYAU TUBO	TUBE TUBO
28		[AC]	**1**	LEVER	LEVIER LEVA	HEBEL PALANCA
30		[A]	**1**	CLEVIS PIN	AXE PERNO D'ATTACCO	SPLINTBOLZEN BULON CILINDRICO
33		25 REF. 25	**1**	COVER	COUVERCLE COPERCHIO	ABDECKUNG. CUBIERTA
34		25 REF. 25	**1**	RING	ANNEAU ANELLO	RING. ANILLO
35		25 REF. 25	**1**	GASKET	JOINT GIUNTO PIANO	FLACHDICHTUNG JUNTA PLANA
36		25 REF. 25	**1**	GASKET	JOINT GIUNTO PIANO	FLACHDICHTUNG JUNTA PLANA
37		25 REF. 25	**1**	CLEVIS PIN	AXE PERNO D'ATTACCO	SPLINTBOLZEN BULON CILINDRICO

Adjusting Device
Reglage
Verstellung
Regolazione
Disposotivo Ajustable

25-70

1-WG73-004-A

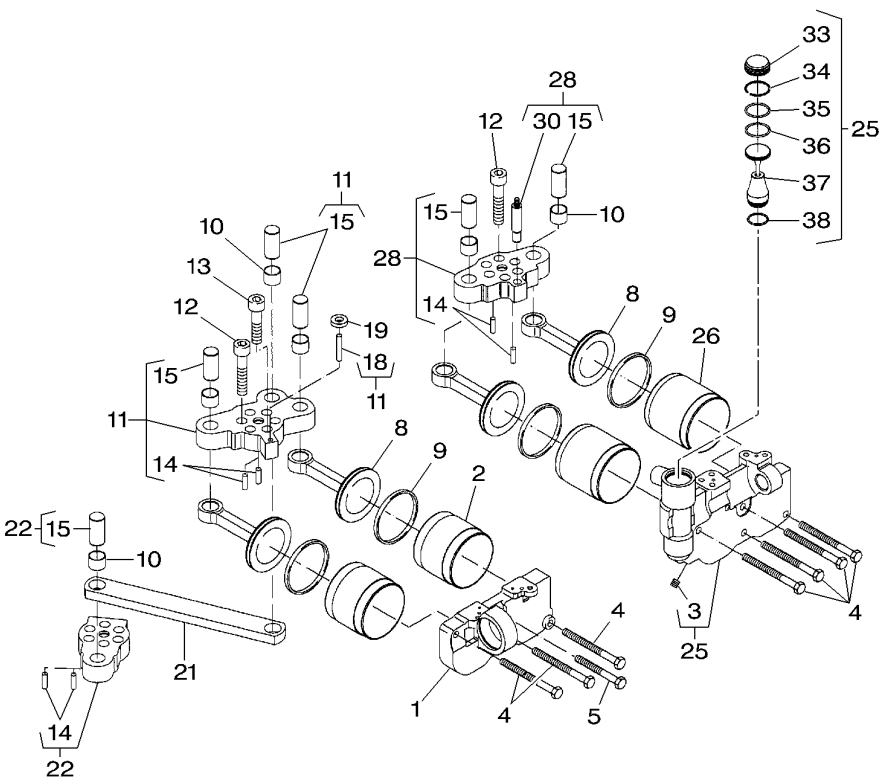

38 25 REF. 25 **1** GASKET JOINT GIUNTO PIANO FLACHDICHTUNG JUNTA PLANA

[A] NOT SUPPLIED SEPARATELY
NON FOURNI SEPAREMENT
NICHT MITGELIEFERT BESTELLEN
NON SERVITO SEPARATAMENTE
NO SUMINISTRADOSEPARADAMENTE

[B] INCLUDES REF. 14,15,18
COMPREND REF. 14,15,18
ENTHALTE REF. 14,15,18
COMPRENDE REF. 14,15,18
INCLUYE REF. 14,15,18

[C] INCLUDES REF. 14,15,30
COMPREND REF. 14,15,30
ENTHALTE REF. 14,15,30
COMPRENDE REF. 14,15,30
INCLUYE REF. 14,15,30

[D] INCLUDES REF. 14,15
COMPREND REF. 14,15
ENTHALTE REF. 14,15
COMPRENDE REF. 14,15
INCLUYE REF. 14,15

Group Gear Shifting
Enclenchement De Groupe
Gruppenschaltung
Cambio Di Gruppo
Cambio De Grupo

25-75

1-WG75-002-A

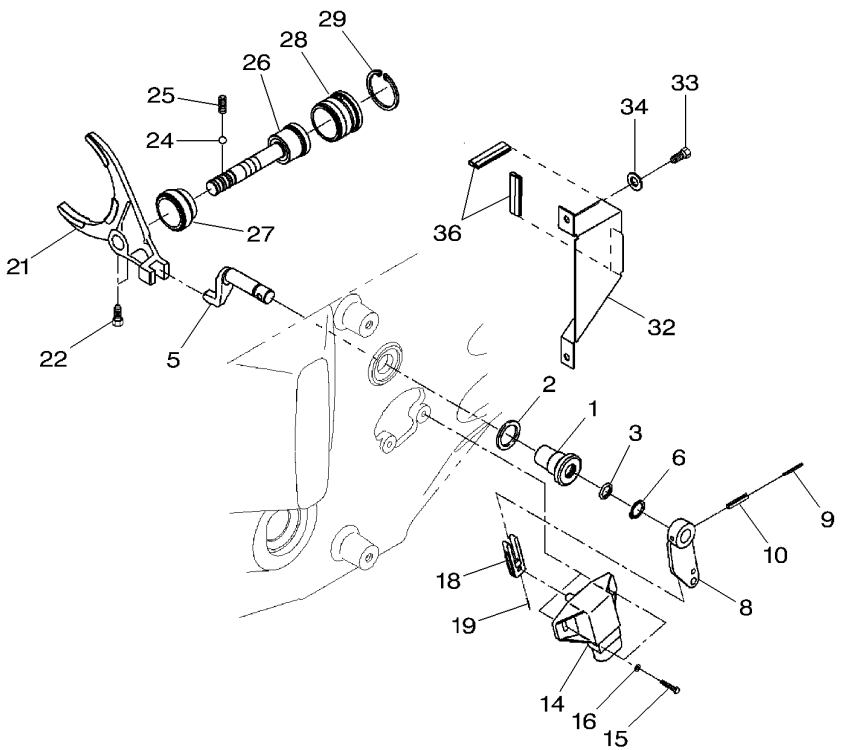

1		[A]	**1**	GUIDE BUSH	BAGUE GUIDE BUSSOLA GUIDA	FUEHRUNGSBUCHSE CASQUILLO GUIA
2	X540008278000		**1**	RING	ANNEAU ANELLO	RING. ANILLO
3	X548848066000		**1**	O RING	JOINT TORIQUE GIUNTO DI TENUTA	O-RING JUNTA TOROIDAL
5	205116300081		**1**	FINGER	DOIGT DITO	FINGER DEDO
6	X530014446000		**1**	CIRCLIP	CIRCLIP ANNELLO ELASTICO	SEEGERING GRAPA CIRCULAR
8	H916101170010		**1**	LEVER	LEVIER LEVA	HEBEL PALANCA
9	X500613146000		**1**	ROLL PIN	GOUPILLE ROULEE SPINA ELASTICA	SPANNHUELSE PASADOR ELASTICO
10	X500624946000		**1**	ROLL PIN	GOUPILLE ROULEE SPINA ELASTICA	SPANNHUELSE PASADOR ELASTICO
14	**G916971020033**		**1**	SENSOR	DETECTEUR SENSORE	SENSOR DETECTOR
15	X487513841000	M4 X 16	**2**	SCREW	VIS VITE	SCHRAUBE TORNILLO
16	X450003308000		**2**	DISC	DISQUE DISCO	SCHEIBE DISCO
18	916101170020		**1**	DRIVING	ENTRAINEUR CONDUCENTE	MITNEHMER DE MANDO
19	X500604900000		**1**	ROLL PIN	GOUPILLE ROULEE SPINA ELASTICA	SPANNHUELSE PASADOR ELASTICO
21	926103080020		**1**	SHIFT FORK	FOURCH PAS VIT FORCELLA CAMBIO	SCHALTGABEL HORQ.DE CAMBIOS
22	X477027705000	M8 X 20	**2**	SCREW	VIS VITE	SCHRAUBE TORNILLO
24	X624206000000		**1**	BALL	BILLE SFERA	KUGEL BOLA
25	012100090080		**1**	SPRING	RESSORT MOLLA	FEDER MUELLE
26	926103080010		**1**	CYLINDER ROD	TIGE DE VERIN ASTA CILINDRO	KOLBENSTANGE BIELA DE CILINDR
27	716101081020		**1**	PISTON	PISTON PISTONE	KOLBEN PISTON
28	716101081030		**1**	COVER	COUVERCLE COPERCHIO	ABDECKUNG. CUBIERTA
29	X530105946000		**1**	CIRCLIP	CIRCLIP ANNELLO ELASTICO	SEEGERING GRAPA CIRCULAR
32	916101170010		**1**	PROTECTOR	PROTECTEUR PROTETTORE	SCHUTZ PROTECTOR
33	X490522300000		**2**	SCREW	VIS VITE	SCHRAUBE TORNILLO
34	X450005108000		**2**	WASHER	RONDELLE RONDELLA	SCHEIBE ARANDELA
36	X304285000000	◄► 100 MM 1X 30 MM 1X 60 MM	**1**	PROTECTIVE STRIP	GAINE PROTECTION GUAINA PROTETTIV	KANTENSCHUTZ BANDA PROTECTORA

Group Gear Shifting Enclenchement De Groupe Gruppenschaltung Cambio Di Gruppo Cambio De Grupo	25-75	

1-WG75-002-A

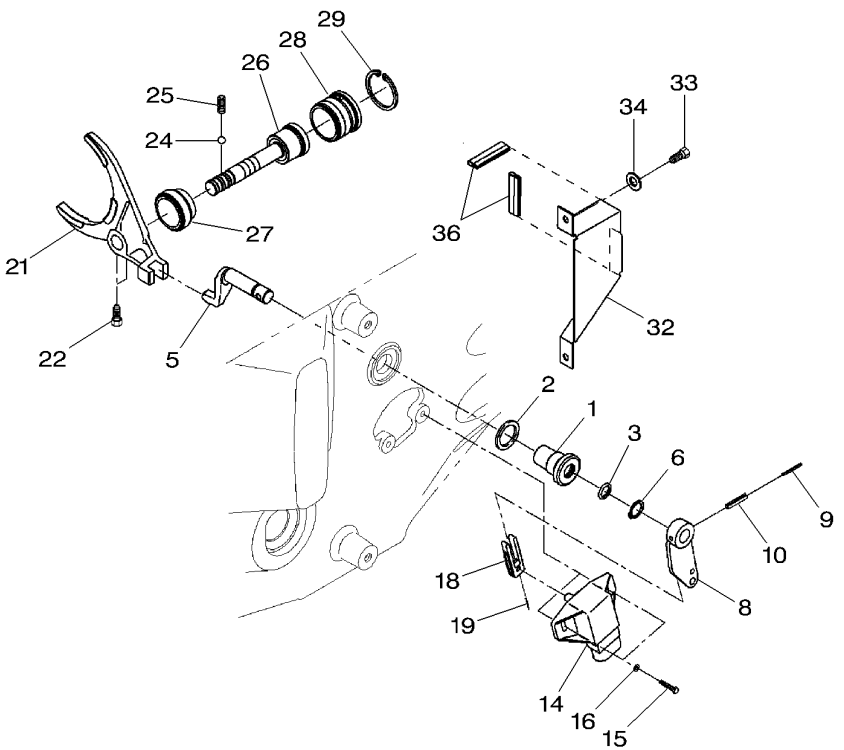

[A] NOT SUPPLIED SEPARATELY
NON FOURNI SEPAREMENT
NICHT MITGELIEFERT BESTELLEN
NON SERVITO SEPARATAMENTE
NO SUMINISTRADOSEPARADAMENTE

Transmission Control Commande De Vitesses Schaltung Comando Trasmissione Control De Transmision	Emergency Control - Drive Line Operation De Secours - Cable Hilfsbetaetigung - Fahren Commando Di Emergenza - Cavo Accionamento Emergencia - Cable	25-80	

1-WG77-002-A

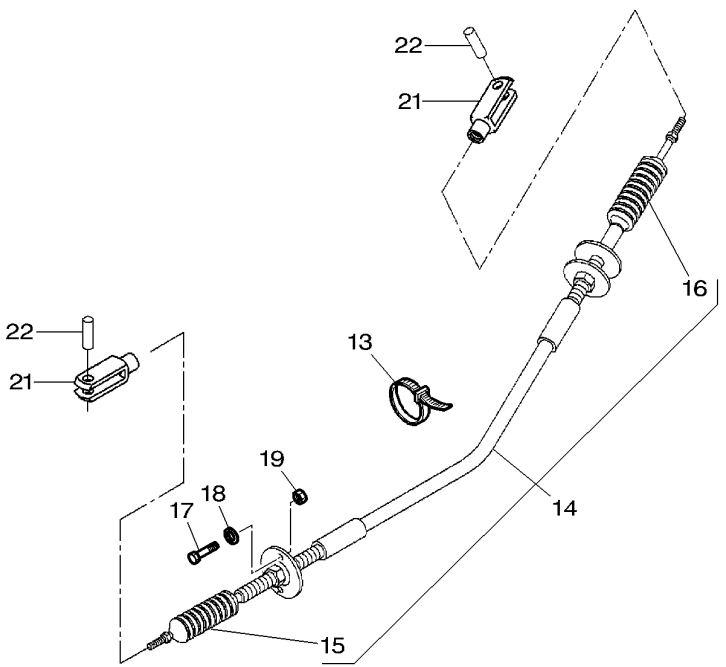

13	X668980522000		**2**	CABLE TIE	ATTACHE CABLE FASCETTA CAVI	KABELBINDER APRIETACABLES
14	G716100090971		**1**	CONTROL CABLE	CABLE DE COMANDE CAVO PRESA MOTO	BEDIENUNGSKABEL CABLE TRASMISION
15	F716100090010	14	**1**	BELLOWS	SOUFFLET SOFFIETTO	FALTENBALG FUELLE
16	F716100090020	14	**1**	BELLOWS	SOUFFLET SOFFIETTO	FALTENBALG FUELLE
17	X487520441000	M6 X 12	**2**	SCREW	VIS VITE	SCHRAUBE TORNILLO
18	X521403047000		**2**	SPRING PLATE	PLAQUE RESSORT RONDELLA ELASTIC	FEDERSCHEIBE. PLETINA MUELLE
19	X428202239000	➡ M6	**2**	NUT	ECROU DADO	MUTTER TUERCA
21	X410115601000		**2**	FORK HEAD	TETE DE FOURCHE TESTA FORCELLA	GABELKOPF CABEZA HORQUILLA
22	X407201401000		**2**	PIN	GOUPILLE COPPIGLIA	STIFT PASADOR

Transmission Control Commande De Vitesses Schaltung Comando Trasmissione Control De Transmision	Emergency Control - Range Operation De Secours - Gamme Hilfsbetaetigung - Gruppe Commando Di Emergenza - Gruppo Accionamento De Emergencia - Gama	**25-85**	From 903/0101 - Up To 903/0300 - From 903/1001 - Up To 903/1783 A Partir Du 903/0101 - Jusqu'Au 903/0300 - A Partir Du 903/1001 - Jusqu'Au 903/1783 Ab 903/0101 - Bis 903/0300 - Ab 903/1001 - Bis 903/1783 Dalla 903/0101 - Fino 903/0300 - Dalla 903/1001 - Fino 903/1783 A Partir Del 903/0101 - Hasta 903/0300 - A Partir Del 903/1001 - Hasta 903/1783

1-WG76-002-A

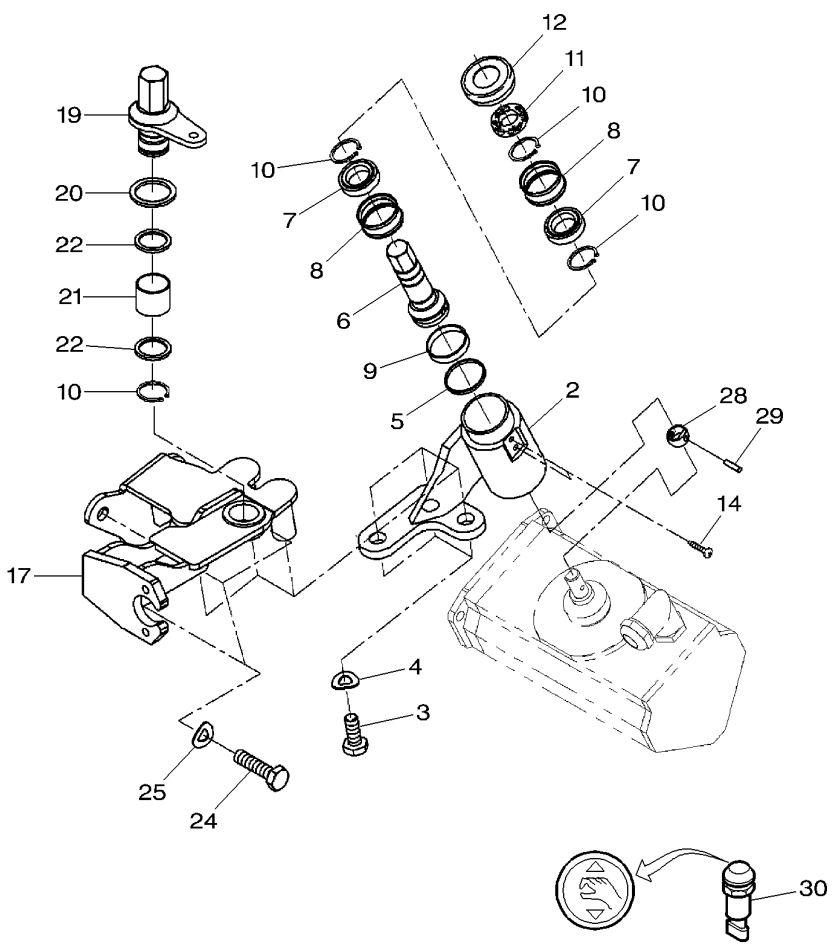

2	716100090710		**1**	CONSOLE	CONSOLE CONSOLE KONSOLE CONSOLA
3	X487531541000	M10 X 25	**3**	SCREW	VIS VITE SCHRAUBE TORNILLO
4	X521404447000		**3**	SPRING PLATE	PLAQUE RESSORT RONDELLA ELASTIC FEDERSCHEIBE. PLETINA MUELLE
5	X534310246000		**1**	SNAPRING	SEGMENT ARRET ANELLO SIEGER SPRENGRING ANILLA RETENCION
6	411101090201		**1**	SHAFT	ARBRE ALBERO WELLE ARBOL
7	X607395200000		**2**	BALL BEARING	ROULEMENT BILLES CUSCINETTO SFERE KUGELLAGER COJINETE DE BOLA
8	916100090250		**2**	RING	ANNEAU ANELLO RING. ANILLO
9	916101090221		**1**	RING	ANNEAU ANELLO RING. ANILLO
10	X530002746000		**4**	CIRCLIP	CIRCLIP ANNELLO ELASTICO SEEGERING GRAPA CIRCULAR
11	178100360050		**1**	RING	ANNEAU ANELLO RING. ANILLO
12	F150403090340		**1**	RING	ANNEAU ANELLO RING. ANILLO
14	X490617400000	M4 X 8	**4**	SCREW	VIS VITE SCHRAUBE TORNILLO
17	H903100090310		**1**	CONSOLE	CONSOLE CONSOLE KONSOLE CONSOLA
19	716100090270		**1**	LEVER	LEVIER LEVA HEBEL PALANCA
20	246860030130		**1**	GASKET	JOINT GIUNTO PIANO FLACHDICHTUNG JUNTA PLANA
21	X605009000000		**1**	BEARING BUSH	BAGUE ROULEMENT BOCCOLA CUSCINET LAGERBUCHSE BUJE DE COJINETE
22	X534537246000		**2**	BACKUP RING	CONTRE BAGUE ANELLO APPOGGIO STUETZRING ANILLA SOPORTE
24	X487531741000	M10 X 30	**3**	SCREW	VIS VITE SCHRAUBE TORNILLO
25	X521404447000		**3**	SPRING PLATE	PLAQUE RESSORT RONDELLA ELASTIC FEDERSCHEIBE. PLETINA MUELLE
28	716100090211		**1**	RING	ANNEAU ANELLO RING. ANILLO
29	X505529200000		**1**	DOWEL	PLOT SPINA ZYLINDERSTIFT CENTRAJE
30	**G716970160030**		**1**	PRESSURE SWITCH	MANO CONTACT PRESSOSTATO DRUCKSCHALTER INTERRUP PRESION

Transmission Control **Commande De Vitesses** **Schaltung** **Comando Trasmissione** **Control De Transmision**	**Emergency Control - Range** **Operation De Secours - Gamme** **Hilfsbetaetigung - Gruppe** **Commando Di Emergenza - Gruppo** **Accionamento De Emergencia - Gama**	**25-90**	**From 903/1784** **A Partir Du 903/1784** **Ab 903/1784** **Dalla 903/1784** **A Partir Del 903/1784**

1-WG76-004-A

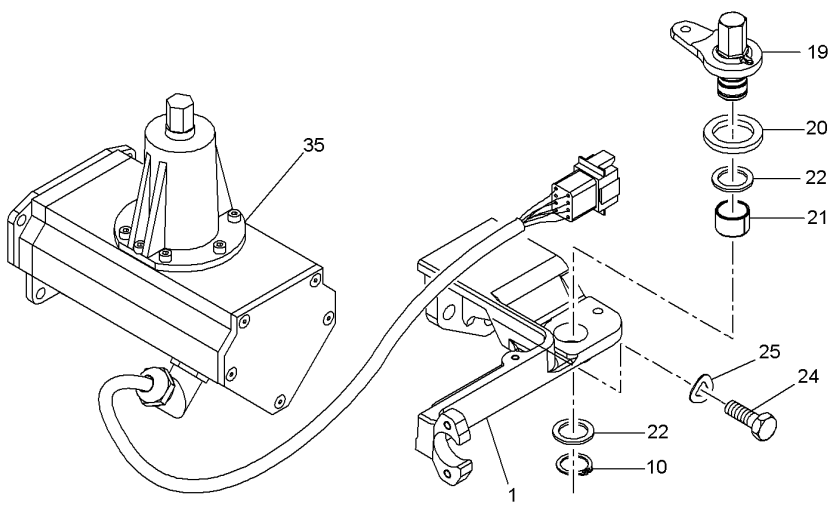

1*	G916101090220		**1**	SHIFT	CHANGEUR CAMBIO SCHALTUNG CAMBIO
10	X530002746000		**4**	CIRCLIP	CIRCLIP ANNELLO ELASTICO SEEGERING GRAPA CIRCULAR
19	716100090270		**1**	LEVER	LEVIER LEVA HEBEL PALANCA
20	246860030130		**1**	GASKET	JOINT GIUNTO PIANO FLACHDICHTUNG JUNTA PLANA
21	X605009000000		**1**	BEARING BUSH	BAGUE ROULEMENT BOCCOLA CUSCINET LAGERBUCHSE BUJE DE COJINETE
22	X534537246000		**2**	BACKUP RING	CONTRE BAGUE ANELLO APPOGGIO STUETZRING ANILLA SOPORTE
24	X487531841000	M10 X 35	**3**	SCREW	VIS VITE SCHRAUBE TORNILLO
25	X521404447000		**3**	SPRING PLATE	PLAQUE RESSORT RONDELLA ELASTIC FEDERSCHEIBE. PLETINA MUELLE
35		25-60 No	**1**	CONTROL	CONTROLE CONTROLLO STEUERUNG MANDO

Control Armrest
Accoudoir De Commande
Schaltung Armlehne
Bracciolo Di Comando
Reposa Brazos De Control

25-95

Fingertip
Fingertip
Fingertip
Fingertip
Fingertip

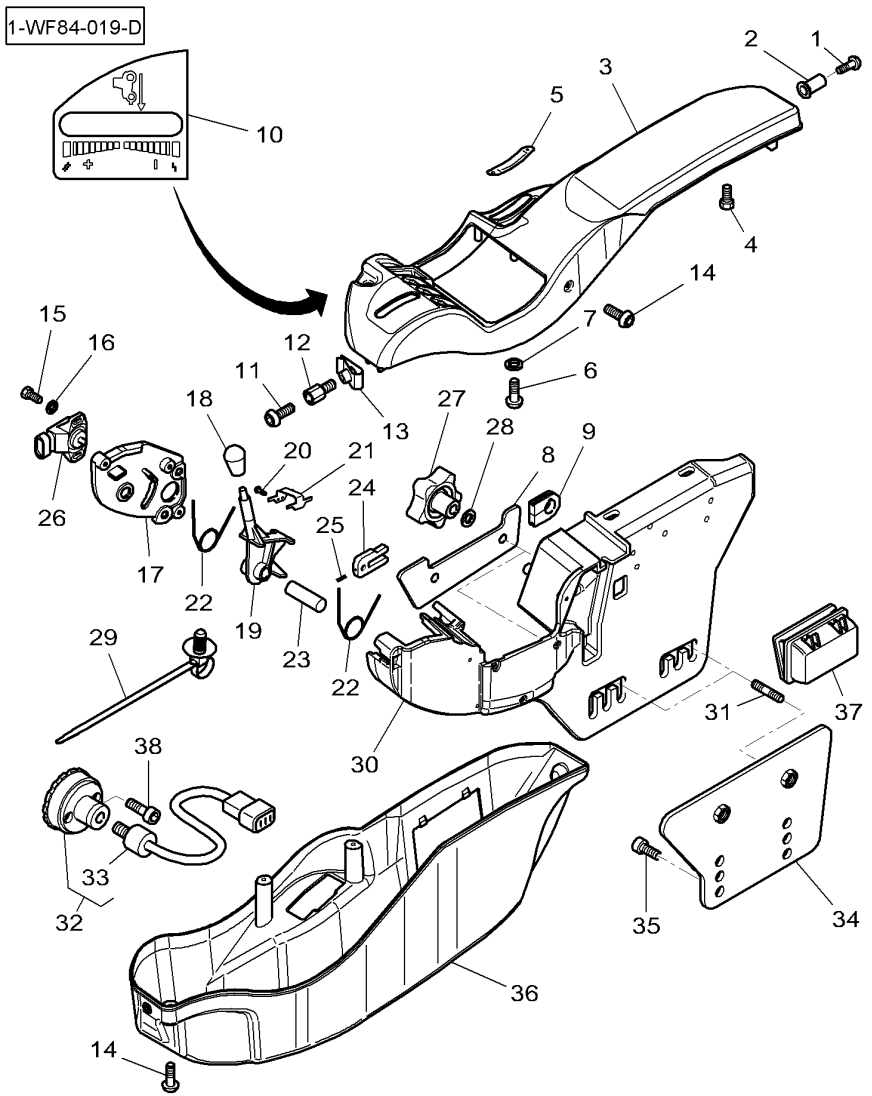

1	3010506X1	M5 X 16	**1**	SCREW	VIS VITE	SCHRAUBE TORNILLO
2	3580776M1	M5	**1**	NUT	ECROU DADO	MUTTER TUERCA
3*	4277370M2		**1**	ENVELOPE	ENVELOPPE BUSTA	BEUTEL SOBRE
4	339123X1	M8 X 20	**2**	HEX. SOCK. SCREW	VIS TETE HEX VITE PARKER	ZYLINDERSCHRAUBE TORN.CAB.HUECA
5	4280256M1		**1**	DECAL	DECALCOMANIE DECALCOMANIA	AUFKLEBER CALCOMANIA
6	4270255M1	No 5x22	**2**	SCREW	VIS VITE	SCHRAUBE TORNILLO
7	3001856X1		**2**	WASHER	RONDELLE RONDELLA	SCHEIBE ARANDELA
8	4281343M1		**1**	REINFORCEMENT	RENFORT RINFORZO	VERSTAERKUNG REFUERZO
9	4271408M2		**1**	GROMMET	PASSE FIL ANELLO PASSACAVO	GUMMITUELLE PASACABLE
10	4280254M1		**1**	DECAL	DECALCOMANIE DECALCOMANIA	AUFKLEBER CALCOMANIA
11	3011175X1	M5 X 8	**1**	SCREW	VIS VITE	SCHRAUBE TORNILLO
12	3786164M2		**1**	SPACER	ENTRETOISE DISTANZIALE	ABSTANDSTUECK DISCO ESPACIADOR
13	3715143M1		**1**	SPRING NUT	ECROU RESSORT SPRING NUT	FEDERMUTTER TUERCA RESORTE
14	4271132M1	3.5 x 14	**X**	SCREW	VIS VITE	SCHRAUBE TORNILLO
15	3010351X1	M4 X 12	**2**	SCREW	VIS VITE	SCHRAUBE TORNILLO
16	339102X1		**2**	WASHER	RONDELLE RONDELLA	SCHEIBE ARANDELA
17	4279927M1		**1**	PLATE	PLAQUE PIASTRA	PLATTE PLATO
18	3787495M1		**1**	KNOB	POMMEAU POMELO	KNOPF POMO
19*	4279874M3		**1**	SUPPORT	SUPPORT SOPPORTO	TRAGER SOPORTE
20	3787143M1		**2**	SCREW	VIS VITE	SCHRAUBE TORNILLO
21	4273509M2		**1**	PLATE	PLAQUE PIASTRA	PLATTE PLATO
22	3788452M2		**2**	SPRING	RESSORT MOLLA	FEDER MUELLE
23	4280199M1		**1**	CLEVIS PIN	AXE PERNO D'ATTACCO	SPLINTBOLZEN BULON CILINDRICO
24	4279929M1		**1**	FORK	FOURCHETTE FORCELLA	GABEL HORQUILLA
25	1442958X1	∅ 1.6 x 20	**1**	SPLIT PIN	GOUPILLE FENDUE COPIGLIA	SPALTBOLZEN PASADOR HENDIDO
26	**4274087M1**		**1**	POTENTIOMETER	POTENTIOMETRE POTENZIOMETRO	POTENTIOMETER REGULADOR ELECT.

Control Armrest
Accoudoir De Commande
Schaltung Armlehne
Bracciolo Di Comando
Reposa Brazos De Control

25-95

Fingertip
Fingertip
Fingertip
Fingertip
Fingertip

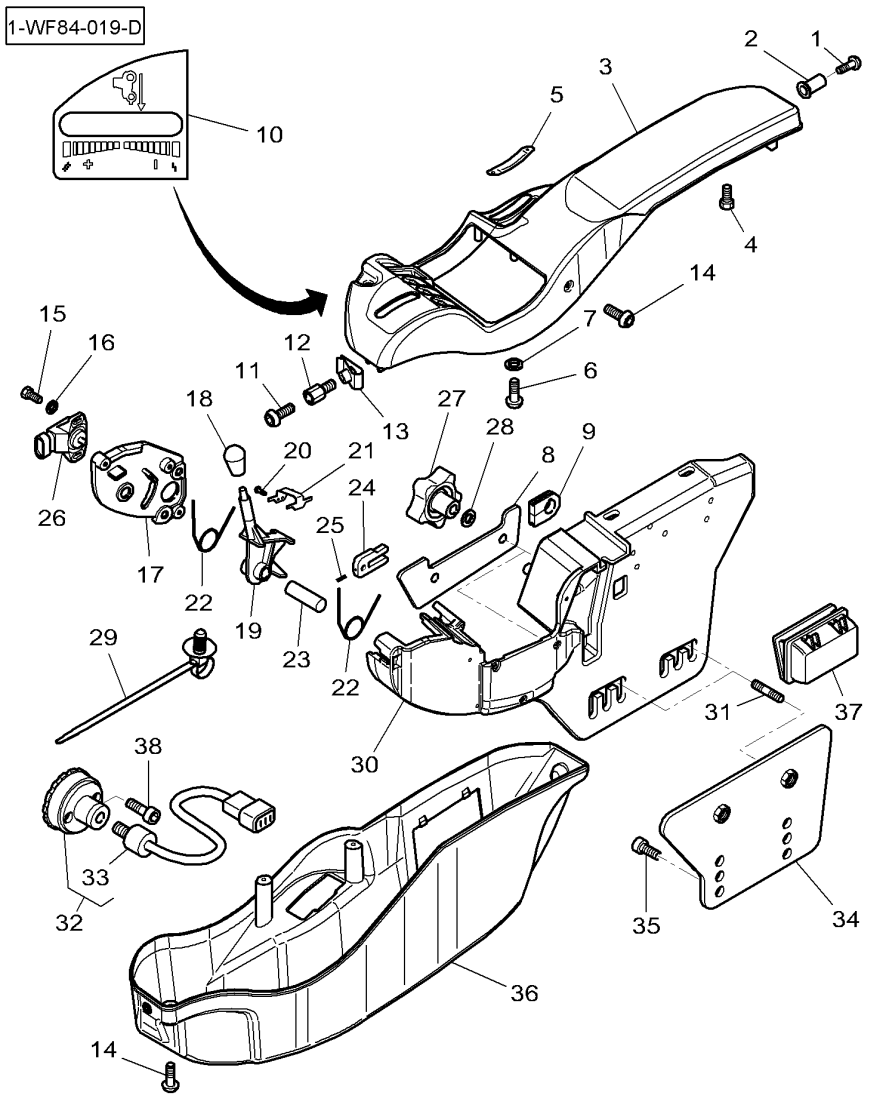

27	3786216M1		**2**	BUTTON	BOUTON BOTTONE	KNOPFTASTE BOTON
28	3778519M1	∅ 10-27 x 1.8	**2**	WASHER	RONDELLE RONDELLA	SCHEIBE ARANDELA
29	4278314M1		**1**	CLAMP	COLLIER FASCETTA	HALTESCHELLE ABRAZADERA
30*	4282204M2		**1**	SUPPORT	SUPPORT SOPPORTO	TRAGER SOPORTE
31	3008483X1	M10 X 35	**2**	STUD	GOUJON SPINOTTO FILETT.	STEHBOLZEN ESPARRAGO ROSCA.
32	4278663M2		**1**	POTENTIOMETER	POTENTIOMETRE POTENZIOMETRO	POTENTIOMETER REGULADOR ELECT.
33	3907530M1	32	**1**	POTENTIOMETER	POTENTIOMETRE POTENZIOMETRO	POTENTIOMETER REGULADOR ELECT.
34*	4284699M1	➡ P306046	**1**	PLATE	PLAQUE PIASTRA	PLATTE PLATO
35*	3009291X1	➡ P306046 M10 X 20	**2**	SCREW	VIS VITE	SCHRAUBE TORNILLO
36*	4279876M92		**1**	MUFF	CACHE MANICOTTO DEVIAN	FLANSCHMUFFE MANGUITO ACOPLAM
37	3781512M1		**1**	ASHTRAY	CENDRIER PORTACENERE	ASCHENBECHER CENICERO
38*	3010818X1		**2**	SCREW METRIC	VIS METRIQUE VITE METRICA	SCHRAUBE METR TORNILLO METRICO

Control Armrest
Accoudoir De Commande
Schaltung Armlehne
Bracciolo Di Comando
Reposa Brazos De Control

25-100

1-WF84-008-A

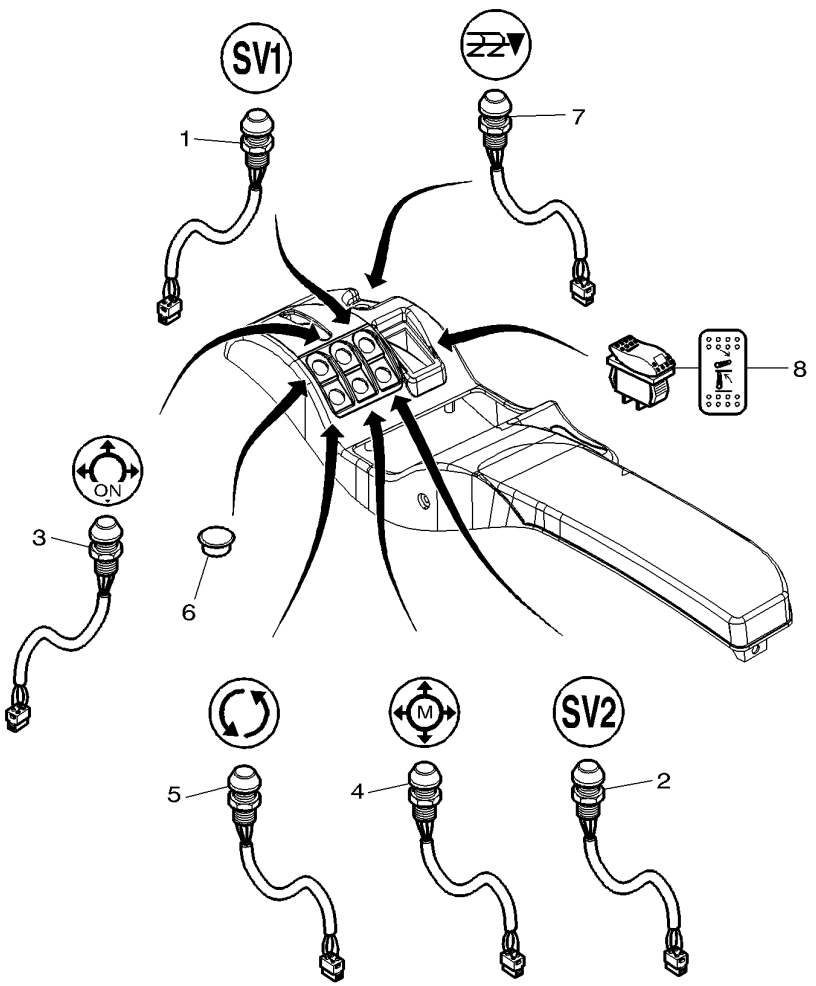

1 *	4291978M1	SV1	**1**	SWITCH,INDIRECT	CONTACTEUR INTERRUTTORE IND	KONTAKTSCHALTER CONTACTOR
2 *	4291980M1	SV2	**1**	SWITCH,INDIRECT	CONTACTEUR INTERRUTTORE IND	KONTAKTSCHALTER CONTACTOR
3 *	4291984M1		**1**	SWITCH,INDIRECT	CONTACTEUR INTERRUTTORE IND	KONTAKTSCHALTER CONTACTOR
4 *	4291983M1		**1**	SWITCH,INDIRECT	CONTACTEUR INTERRUTTORE IND	KONTAKTSCHALTER CONTACTOR
5 *	4291979M1		**1**	SWITCH	INTERRUPTEUR INTERRUTTORE	SCHALTER INTERRUPTOR
6	3784237M1		**1**	PLUG	BOUCHON TAPPO	STOPFEN TAPON
7 *	**4291982M1**		**1**	SWITCH,INDIRECT	CONTACTEUR INTERRUTTORE IND	KONTAKTSCHALTER CONTACTOR
8	**4270970M3**		**1**	SWITCH,INDIRECT	CONTACTEUR INTERRUTTORE IND	KONTAKTSCHALTER CONTACTOR

Module Fingertip For Distributor With Electrodynamique	**Control**	**25-105**
Module Fingertip Pour Distrib. A Commande Electro -	**Hydraulique**	
Model Fingertip Fur Verteiler Mit Elektrodynamischer	**Antrieb**	
Modulo Fingertip Per Distributore A Comando Eletttro-	**Idraulico**	
Modulo Fingertip Para Distribuidor A Mando Electro-	**Hydraulico**	

1-WP17-001-A

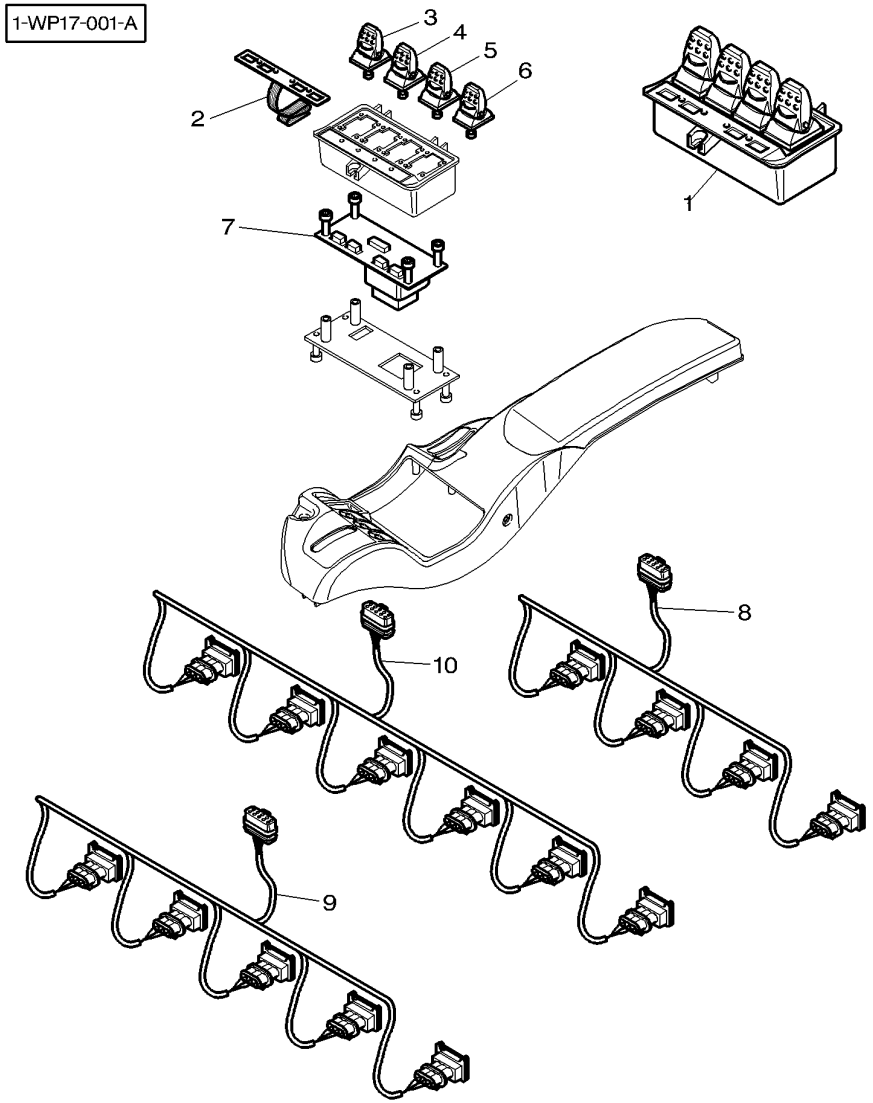

1	4277365M92		**1**	MODULE	MODULE MODULO	MODUL MODULO
2		1 [D]	**1**	PRINTED CIRCUIT	CIRCUIT IMPRIME CIRCUITO STAMP.	GEDRUCKTESCHALTG CIRCUITO IMPRESO
3		1 [D]	**1**	CONTROL KNOB	BOUTON COMMANDE CONTROL KNOB	STEUERKOPF CONTROL KNOB
4		1 [D]	**1**	CONTROL KNOB	BOUTON COMMANDE CONTROL KNOB	STEUERKOPF CONTROL KNOB
5		1 [D]	**1**	CONTROL KNOB	BOUTON COMMANDE CONTROL KNOB	STEUERKOPF CONTROL KNOB
6		1 [D]	**1**	CONTROL KNOB	BOUTON COMMANDE CONTROL KNOB	STEUERKOPF CONTROL KNOB
7		1 [D]	**1**	PRINTED CIRCUIT	CIRCUIT IMPRIME CIRCUITO STAMP.	GEDRUCKTESCHALTG CIRCUITO IMPRESO
8	4271167M2	[A]	**1**	HARNESS	FAISCEAU FASCIOCAVI	KABELBAUM MAZO CABLES
9	4277733M91	[B]	**1**	HARNESS	FAISCEAU FASCIOCAVI	KABELBAUM MAZO CABLES
10	4277732M91	[C]	**1**	HARNESS	FAISCEAU FASCIOCAVI	KABELBAUM MAZO CABLES

[A] 4 DISTRIBUTORS WITH ELECTRIC CONTROL
4 DISTRIBUTEURS AVEC COMMANDE ELECTRIQUE
4 VERTEILERS MIT ELEKTRISCHE SCHALTUNG
4 DISTRIBUTORES CON COMANDO ELECTRICO
4 DISTRIBUIDORS CON MANDO ELECTRICO

[B] 5 DISTRIBUTORS WITH ELECTRIC CONTROL
5 DISTRIBUTEURS AVEC COMMANDE ELECTRIQUE
5 VERTEILERS MIT ELEKTRISCHE SCHALTUNG
5 DISTRIBUTORES CON COMANDO ELECTRICO
5 DISTRIBUIDORS CON MANDO ELECTRICO

[C] 6 DISTRIBUTORS WITH ELECTRIC CONTROL
6 DISTRIBUTEURS AVEC COMMANDE ELECTRIQUE
6 VERTEILERS MIT ELEKTRISCHE SCHALTUNG
6 DISTRIBUTORES CON COMANDO ELECTRICO
6 DISTRIBUIDORS CON MANDO ELECTRICO

[D] NOT DEAILLE BY THE SUPPLIER TO ORDER THE UNIT
NON DETAILLE PAR LE FOURNISSEUR COMMANDER L'ENSEMB LE
NICHT DETAILLE DURCH DEN LIEFERANTEN DIE GESAMTHEI T ZU LEITEN
NON DETAILLE DA PARTE DEL FORNITORE COMANDARE L'IN SIEME
NO HAY DETAILLE POR EL PROVEENDOR ENCARGAR EL CONJ UNTO

30

Handbrake
Frein A Main
Handbremse
Freno A Mano
Freno De Mano

30-5

1-WG28-016-B

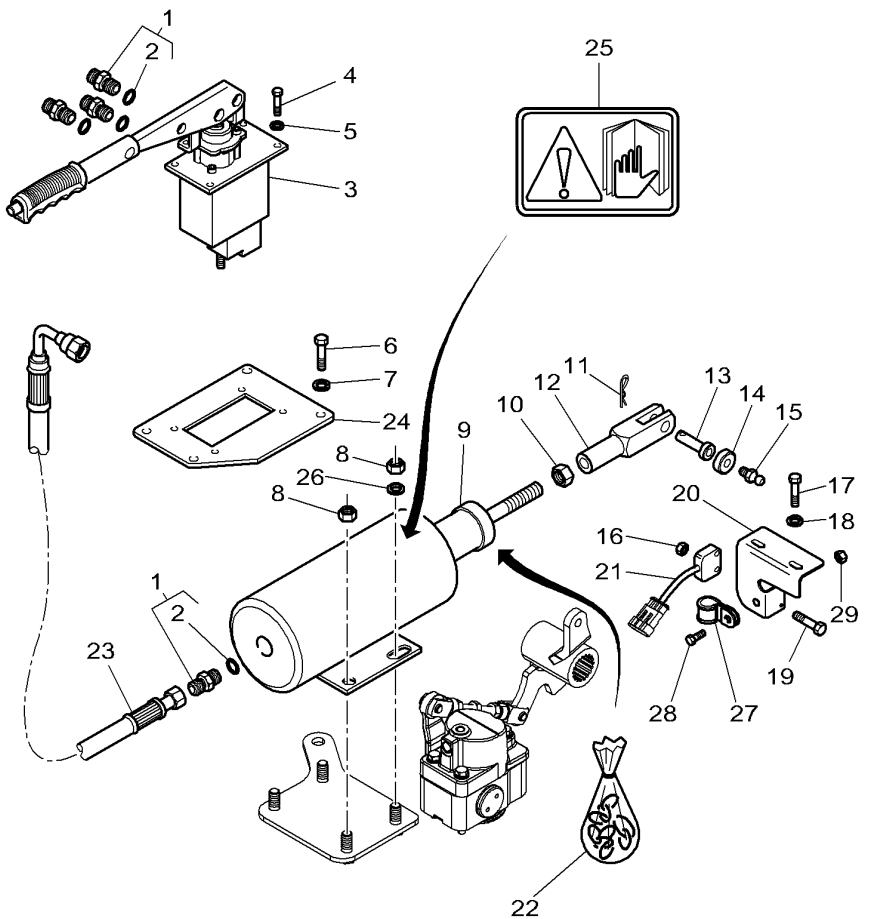

1	3011038X91		**4**	UNION	RACCORD RACCORDO	VERSCHRAUBUNG RACOR
2	338762X1	1	**1**	SEAL	JOINT ETANCHEITE GIUNTO ROTONDO	DICHTRING JUNTA REDONDA
3*	4274587M91	➡ R160018 👁 30-10 No 1	**1**	LEVER	LEVIER LEVA	HEBEL PALANCA
3*	4274587M92	➡ R160019 👁 30-10 No 1	**1**	LEVER	LEVIER LEVA	HEBEL PALANCA
4	339560X1	M6 X 16	**4**	HEX. SOCK. SCREW	VIS TETE HEX VITE PARKER	ZYLINDERSCHRAUBE TORN.CAB.HUECA
5	3019571X1		**4**	WASHER	RONDELLE RONDELLA	SCHEIBE ARANDELA
6	339761X1	M8 X 25	**4**	HEX. SOCK. SCREW	VIS TETE HEX VITE PARKER	ZYLINDERSCHRAUBE TORN.CAB.HUECA
7	390972X1		**4**	FLAT WASHER	RONDELLE PLATE RONDELLE PIANA	UNTERLEGSCHEIBEN ARANDELA PLANA
8	339054X1		**4**	NUT SPECIAL	ECROU SPECIAL DADO SPECIALE	SPEZIALMUTTER TUERCA ESPECIAL
9	3788718M1	[A]	**1**	RAM	VERIN CILINDRO IDRAUL.	HYDR.ZYLINDER ARIETE
10	1440231X1		**1**	NUT METRIC	ECROU METRIQUE DADO METRICO	MUTTER METRISCH TUERCA METRICO
11	1442993X1		**1**	SPLIT PIN	GOUPILLE FENDUE COPIGLIA	SPALTBOLZEN PASADOR HENDIDO
12	4274903M2		**1**	CLEVIS	CHAPE GANCIO D'ATTACCO	GABELSTUECK GANCHO SEGURI.
13	916100030010		**1**	PIN	GOUPILLE COPPIGLIA	STIFT PASADOR
14	X830120050000		**1**	MAGNET	AIMANT MAGNETE.	MAGNET IMAN
15	3019880X1	M4 X 12	**1**	SCREW METRIC	VIS METRIQUE VITE METRICA	SCHRAUBE METR TORNILLO METRICO
16	1443615X1		**2**	NUT	ECROU DADO	MUTTER TUERCA
17	3011539X1	M6 X 3-13	**2**	SCREW	VIS VITE	SCHRAUBE TORNILLO
18	390971X1		**2**	FLAT WASHER	RONDELLE PLATE RONDELLE PIANA	UNTERLEGSCHEIBEN ARANDELA PLANA
19	1442172X1	M4 X 16	**2**	HEX. SOCK. SCREW	VIS TETE HEX VITE PARKER	ZYLINDERSCHRAUBE TORN.CAB.HUECA
20	4280936M2		**1**	SUPPORT	SUPPORT SOPPORTO	TRAGER SOPORTE
21	**H312900150010**		**1**	SOLENOID SWITCH	RELAIS SOLENOIDE INTERRUTTORE SOL	MAGNETSCHALTER INTERR SOLENOIDE
22	3907421M91		**1**	KIT,JOINT/GASKET	JEU DE JOINTS KIT GUARN/GIUNTO	DICHTUNGS-SATZ JGO.JUNTAS/EMPAQ
23	4276153M1	◀▶ 550MM	**1**	HYDR. HOSE	FLEXIBLE TUBOFLEX IDRAUL	HYDR. SCHLAUCH TUBO HIDRAULICO
24	4276681M1		**1**	SUPPORT	SUPPORT SOPPORTO	TRAGER SOPORTE
25	4278652M1		**1**	DECAL	DECALCOMANIE DECALCOMANIA	AUFKLEBER CALCOMANIA

Handbrake
Frein A Main
Handbremse
Freno A Mano
Freno De Mano

30-5

1-WG28-016-B

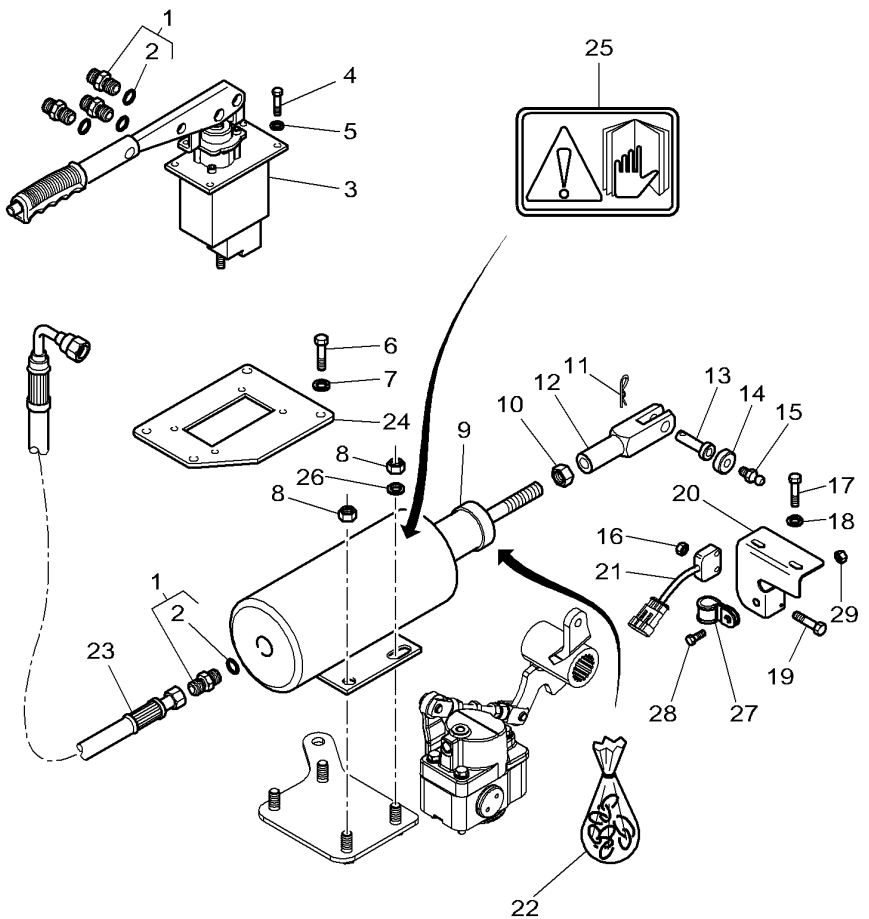

26	385363X1		**2**	WASHER	RONDELLE RONDELLA	SCHEIBE ARANDELA
27	3581424M1		**1**	CLIP	PATTE D'ATTACHE FERMAGLIO	SCHELLE CLIP
28	339761X1	M8 X 25	**1**	HEX. SOCK. SCREW	VIS TETE HEX VITE PARKER	ZYLINDERSCHRAUBE TORN.CAB.HUECA
29	339169X1	M8	**1**	NUT	ECROU DADO	MUTTER TUERCA

[A] THE APPROPRIATE SAFETY DECALS MUST BE ORDERED AND FITTED TO THIS PART
CETTE PIECE DOIT ETRE IMPERATIVEMENT COMMANDEE AVEC SA DECALCOMANIE DE SECURITE
DIESES TEIL MUSS UNBEDINGT ZUSAMMEN MIT DEM SICHER HEITSHINWEISSCHILD BESTELLT WERDEN
QUESTA PARTE DEVE ESSERE IMPERATIVAMENTO COMANDATA CON LA SUA DECALCOMANIA SICUREZZA
ESTA PARTE DEBE ENCARGARSE IMPERATIVAMENTE CON SU CALCOMANIA DE SEGURIDAD

Handbrake
Frein A Main
Handbremse
Freno A Mano
Freno De Mano

30-10

1-WG28-022-A

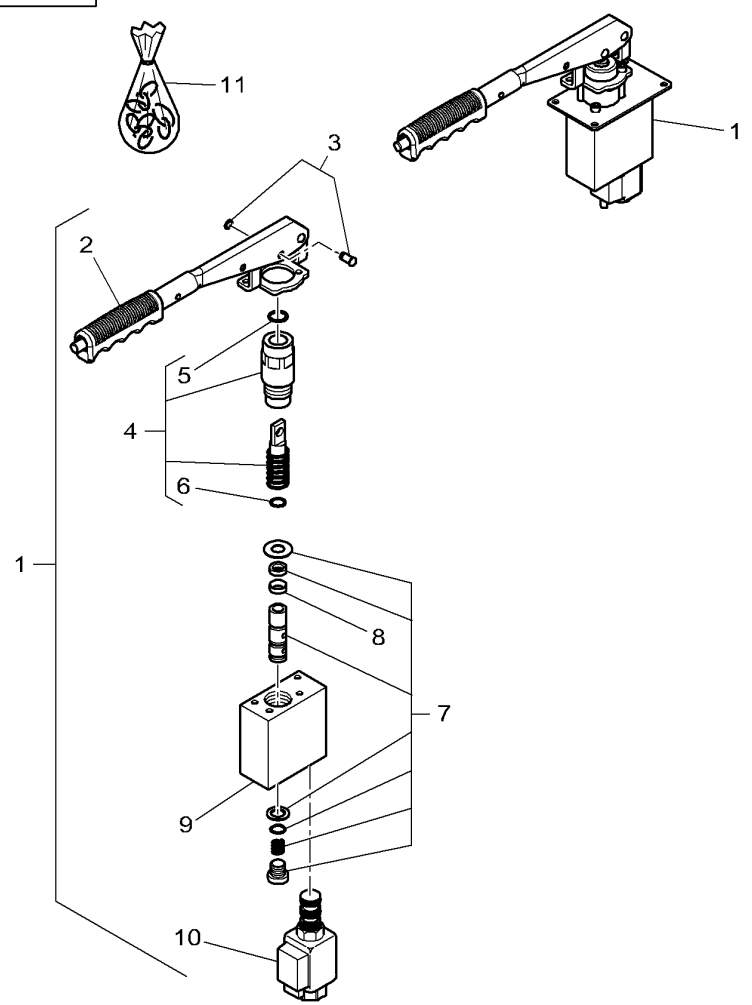

1*	4274587M91	➡ R160018	**1**	LEVER	LEVIER LEVA	HEBEL PALANCA
1*	4274587M92	➡ R160019	**1**	LEVER	LEVIER LEVA	HEBEL PALANCA
2*	3907841M91	1	**1**	LEVER	LEVIER LEVA	HEBEL PALANCA
3*	3907824M91	1	**1**	PARTS PACK	JEU PIECES PACCO RICAMBI	SATZ TEILE PAQUETE PIEZAS
4*	3907906M1	1	**1**	VALVE	SOUPAPE VALVOLA	VENTIL VALVULA
5*		4 REF. 11	**1**	GASKET	JOINT GIUNTO PIANO	FLACHDICHTUNG JUNTA PLANA
6*		4 REF. 11	**1**	GASKET	JOINT GIUNTO PIANO	FLACHDICHTUNG JUNTA PLANA
7*	3907837M91	1	**1**	PARTS PACK	JEU PIECES PACCO RICAMBI	SATZ TEILE PAQUETE PIEZAS
8*		7 REF. 11	**1**	GASKET	JOINT GIUNTO PIANO	FLACHDICHTUNG JUNTA PLANA
9*		1 REF. 1	**1**	BODY	CORPS CORPO	RUMPF CUERPO
10*	3907840M91	1 ➡ R160018	**1**	ELECTROVALVE	ELECTROVANNE ELETTROVALVOLA	ELECTRON.VENTIL ELECTROVALVULA
10*	3907838M91	1 ➡ R160019	**1**	ELECTROVALVE	ELECTROVANNE ELETTROVALVOLA	ELECTRON.VENTIL ELECTROVALVULA
11*	3907822M91		**1**	KIT, JOINT	JEU JOINTS KIT GIUNTO	DICHTUNGSSATZ JUEGO JUNTAS

Handbrake
Frein A Main
Handbremse
Freno A Mano
Freno De Mano

30-15

Without Breake Beam
Sans Levier De Commande De Frein
Ohne Bremsansgleichhebel
Senza Leva Per Bilanciere Del Freno
Sin Balancin Del Freino

1-WG28-017-B

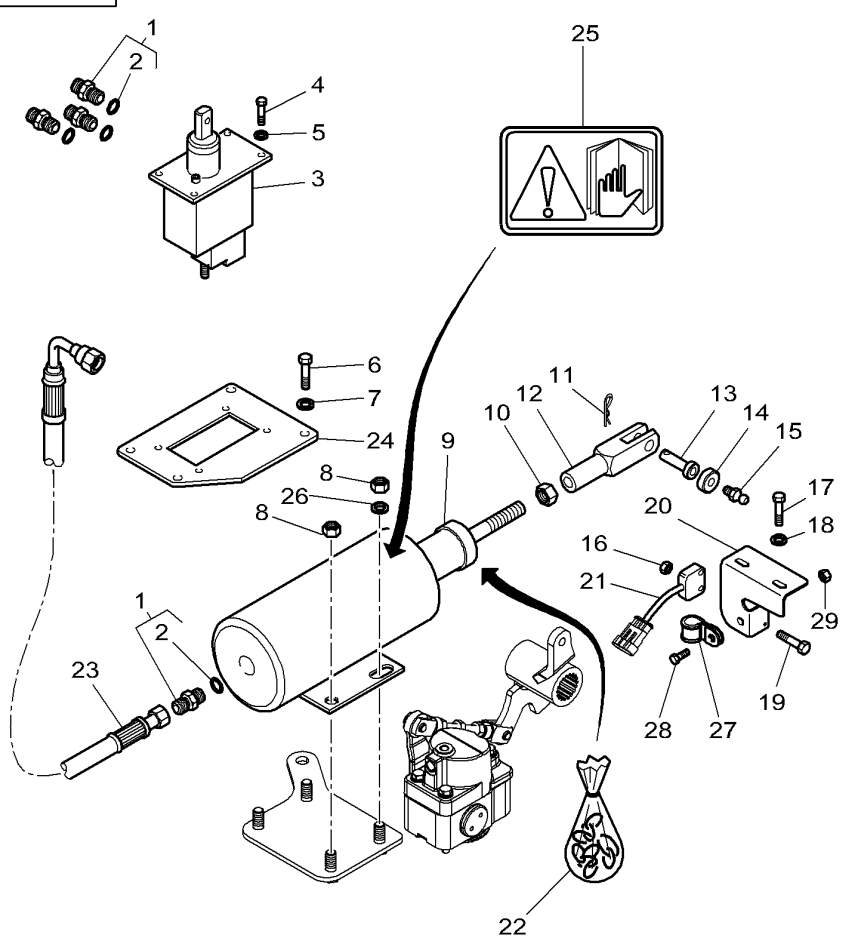

1	3011038X91		**4**	UNION	RACCORD RACCORDO	VERSCHRAUBUNG RACOR
2	338762X1	1	**1**	SEAL	JOINT ETANCHEITE GIUNTO ROTONDO	DICHTRING JUNTA REDONDA
3*	4276982M91	➡ R201039 👁 30-20 No 1	**1**	BLOCK	BLOC TASSELLO	BLOCK BLOQUE
3*	4276982M92	➡ R201040 👁 30-20 No 1	**1**	BLOCK	BLOC TASSELLO	BLOCK BLOQUE
4	339560X1	M6 X 16	**4**	HEX. SOCK. SCREW	VIS TETE HEX VITE PARKER	ZYLINDERSCHRAUBE TORN.CAB.HUECA
5	3019571X1		**4**	WASHER	RONDELLE RONDELLA	SCHEIBE ARANDELA
6	339761X1	M8 X 25	**4**	HEX. SOCK. SCREW	VIS TETE HEX VITE PARKER	ZYLINDERSCHRAUBE TORN.CAB.HUECA
7	390972X1		**4**	FLAT WASHER	RONDELLE PLATE RONDELLE PIANA	UNTERLEGSCHEIBEN ARANDELA PLANA
8	339054X1		**4**	NUT SPECIAL	ECROU SPECIAL DADO SPECIALE	SPEZIALMUTTER TUERCA ESPECIAL
9	3788718M1	[A]	**1**	RAM	VERIN CILINDRO IDRAUL.	HYDR.ZYLINDER ARIETE
10	1440231X1		**1**	NUT METRIC	ECROU METRIQUE DADO METRICO	MUTTER METRISCH TUERCA METRICO
11	1442993X1		**1**	SPLIT PIN	GOUPILLE FENDUE COPIGLIA	SPALTBOLZEN PASADOR HENDIDO
12	4274903M2		**1**	CLEVIS	CHAPE GANCIO D'ATTACCO	GABELSTUECK GANCHO SEGURI.
13	916100030010		**1**	PIN	GOUPILLE COPPIGLIA	STIFT PASADOR
14	X830120050000		**1**	MAGNET	AIMANT MAGNETE.	MAGNET IMAN
15	3019880X1	M4 X 12	**1**	SCREW METRIC	VIS METRIQUE VITE METRICA	SCHRAUBE METR TORNILLO METRICO
16	1443615X1		**2**	NUT	ECROU DADO	MUTTER TUERCA
17	3011539X1	M6 X 3-13	**2**	SCREW	VIS VITE	SCHRAUBE TORNILLO
18	390971X1		**2**	FLAT WASHER	RONDELLE PLATE RONDELLE PIANA	UNTERLEGSCHEIBEN ARANDELA PLANA
19	1442172X1	M4 X 16	**2**	HEX. SOCK. SCREW	VIS TETE HEX VITE PARKER	ZYLINDERSCHRAUBE TORN.CAB.HUECA
20	4280936M2		**1**	SUPPORT	SUPPORT SOPPORTO	TRAGER SOPORTE
21	**H312900150010**		**1**	SOLENOID SWITCH	RELAIS SOLENOIDE INTERRUTTORE SOL	MAGNETSCHALTER INTERR SOLENOIDE
22	3907421M91		**1**	KIT,JOINT/GASKET	JEU DE JOINTS KIT GUARN/GIUNTO	DICHTUNGS-SATZ JGO.JUNTAS/EMPAQ
23	4276153M1	◀▶ 550MM	**1**	HYDR. HOSE	FLEXIBLE TUBOFLEX IDRAUL	HYDR. SCHLAUCH TUBO HIDRAULICO
24	4276681M1		**1**	SUPPORT	SUPPORT SOPPORTO	TRAGER SOPORTE
25	4278652M1		**1**	DECAL	DECALCOMANIE DECALCOMANIA	AUFKLEBER CALCOMANIA

Handbrake
Frein A Main
Handbremse
Freno A Mano
Freno De Mano

30-15

Without Breake Beam
Sans Levier De Commande De Frein
Ohne Bremsansgleichhebel
Senza Leva Per Bilanciere Del Freno
Sin Balancin Del Freino

1-WG28-017-B

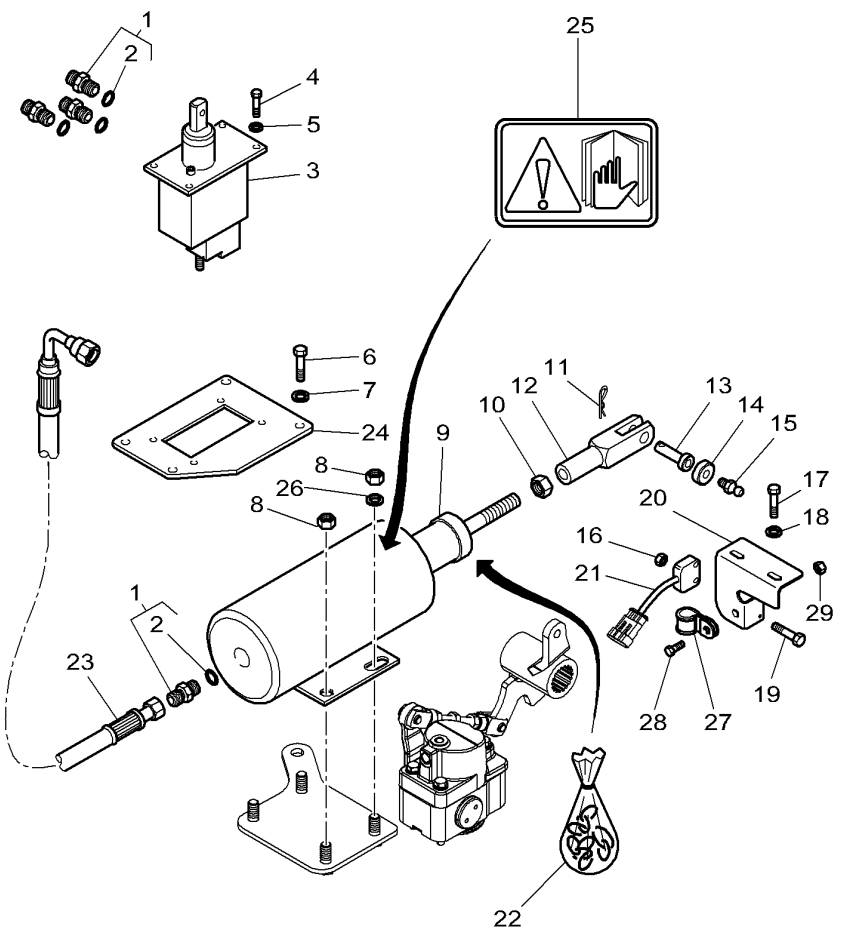

26	385363X1		**2**	WASHER	RONDELLE RONDELLA	SCHEIBE ARANDELA
27	3581424M1		**1**	CLIP	PATTE D'ATTACHE FERMAGLIO	SCHELLE CLIP
28	339761X1	M8 X 25	**1**	HEX. SOCK. SCREW	VIS TETE HEX VITE PARKER	ZYLINDERSCHRAUBE TORN.CAB.HUECA
29	339169X1	M8	**1**	NUT	ECROU DADO	MUTTER TUERCA

[A] THE APPROPRIATE SAFETY DECALS MUST BE ORDERED AND FITTED TO THIS PART
CETTE PIECE DOIT ETRE IMPERATIVEMENT COMMANDEE AVEC SA DECALCOMANIE DE SECURITE
DIESES TEIL MUSS UNBEDINGT ZUSAMMEN MIT DEM SICHER HEITSHINWEISSCHILD BESTELLT WERDEN
QUESTA PARTE DEVE ESSERE IMPERATIVAMENTO COMANDATA CON LA SUA DECALCOMANIA SICUREZZA
ESTA PARTE DEBE ENCARGARSE IMPERATIVAMENTE CON SU CALCOMANIA DE SEGURIDAD

Handbrake
Frein A Main
Handbremse
Freno A Mano
Freno De Mano

30-20

1-WG28-023-A

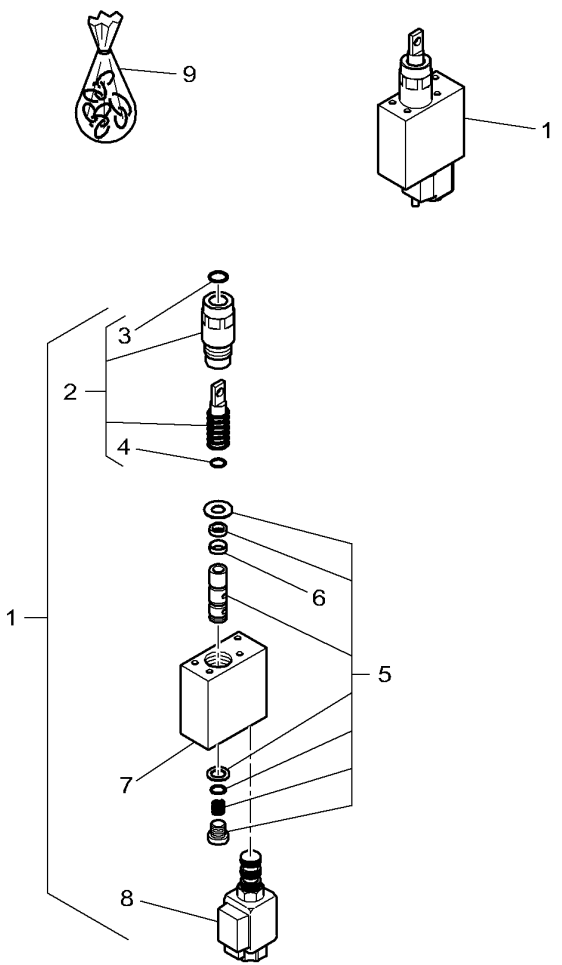

1*	4276982M91	R201039	**1**	BLOCK	BLOC TASSELLO	BLOCK BLOQUE
1*	4276982M92	R201040	**1**	BLOCK	BLOC TASSELLO	BLOCK BLOQUE
2*	3907906M1	1	**1**	VALVE	SOUPAPE VALVOLA	VENTIL VALVULA
3*		2 REF. 9	**1**	GASKET	JOINT GIUNTO PIANO	FLACHDICHTUNG JUNTA PLANA
4*		2 REF. 9	**1**	GASKET	JOINT GIUNTO PIANO	FLACHDICHTUNG JUNTA PLANA
5*	3907837M91	1	**1**	PARTS PACK	JEU PIECES PACCO RICAMBI	SATZ TEILE PAQUETE PIEZAS
6*		5 REF. 9	**1**	GASKET	JOINT GIUNTO PIANO	FLACHDICHTUNG JUNTA PLANA
7*		1 REF. 1	**1**	BODY	CORPS CORPO	RUMPF CUERPO
8*	3907840M91	1 R201039	**1**	ELECTROVALVE	ELECTROVANNE ELETTROVALVOLA	ELECTRON.VENTIL ELECTROVALVULA
8*	3907838M91	1 R201040	**1**	ELECTROVALVE	ELECTROVANNE ELETTROVALVOLA	ELECTRON.VENTIL ELECTROVALVULA
9*	3907822M91		**1**	KIT, JOINT	JEU JOINTS KIT GIUNTO	DICHTUNGSSATZ JUEGO JUNTAS

Handbrake
Frein A Main
Handbremse
Freno A Mano
Freno De Mano

30-25

Tie Rod
Tringlerie
Zugstange
Tirante
Brazo De Enlace

1-WG28-011-A

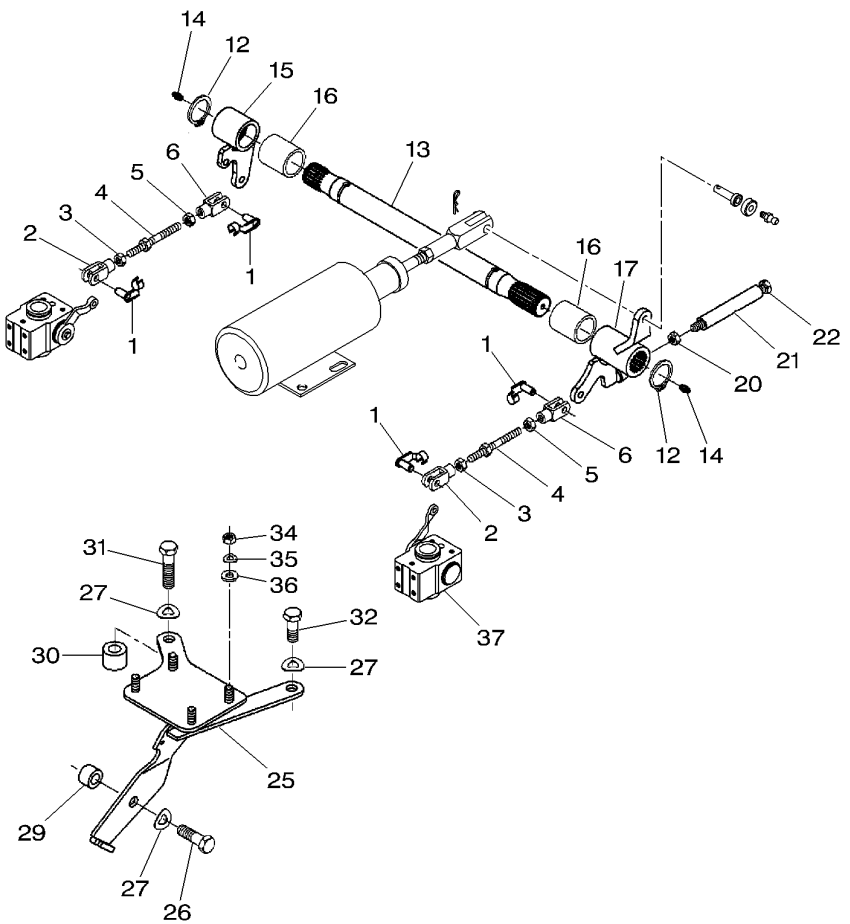

1	X407202001000		4	PIN	GOUPILLE COPPIGLIA	STIFT PASADOR
2	X410124605000		2	FORK HEAD	TETE DE FOURCHE TESTA FORCELLA	GABELKOPF CABEZA HORQUILLA
3	X428202839000		2	NUT	ECROU DADO	MUTTER TUERCA
4	H926150030020		2	THREADED PART	PIECE FILETEE PARTE FILETTATO	GEWINDESTUECK VARILLA ROSCADO
5	X428202739000	M10	2	NUT	ECROU DADO	MUTTER TUERCA
6	X410125801000		2	FORK HEAD	TETE DE FOURCHE TESTA FORCELLA	GABELKOPF CABEZA HORQUILLA
12	X530004246000	∅ 34 X 1,5	2	CIRCLIP	CIRCLIP ANNELLO ELASTICO	SEEGERING GRAPA CIRCULAR
13	822100030040	[A]	1	SHAFT	ARBRE ALBERO	WELLE ARBOL
14	X662516200000		2	GREASE NIPPLE	GRAISSEUR DROIT INGRASSAT.	FETT-NIPPEL ENGRASADOR
15	H822100030030		1	LEVER	LEVIER LEVA	HEBEL PALANCA
16	155302010110		2	BUSH	BAGUE BOCCOLA	RING CASQUILLO
17	H822100030020		1	LEVER	LEVIER LEVA	HEBEL PALANCA
20	X434103240000	M12	1	NUT	ECROU DADO	MUTTER TUERCA
21	X591202101000	◀▶ 0,10 M	1	HOSE	DURITE TUBO FLESSIBILE	SCHLAUCH TUBO DE GOMA
22	X487537500000	M12 X 150	1	SCREW	VIS VITE	SCHRAUBE TORNILLO
25	H926150030060		1	BEARING PLATE	PLAQUE ROULEMENT PIASTRA CUSCINET	LAGERPLATTE PLACA DE APOYO
26	X487545441000	M16 X 50	1	SCREW	VIS VITE	SCHRAUBE TORNILLO
27	X521406647000		3	SPRING PLATE	PLAQUE RESSORT RONDELLA ELASTIC	FEDERSCHEIBE. PLETINA MUELLE
29	138715140010		1	DISTANCE PIECE	PIECE ENTRETOISE DISTANZIATORE	DISTANZSTUECK ESPACIADOR
30			X	NOT USED	NON UTILISE INUSATO	NICHT VERWENDET NO SE USA
31	X487545441000	M16 X 50	1	SCREW	VIS VITE	SCHRAUBE TORNILLO
32	X487545241000	M6 X 40	1	SCREW	VIS VITE	SCHRAUBE TORNILLO
34	X428203239000	M12	4	NUT	ECROU DADO	MUTTER TUERCA
35	X521405047000		4	SPRING PLATE	PLAQUE RESSORT RONDELLA ELASTIC	FEDERSCHEIBE. PLETINA MUELLE
36	X453608408000		2	DISC	DISQUE DISCO	SCHEIBE DISCO
37		👁 70-60 No 36	1	WHEEL CYLINDER	CYLINDRE ROUE CILINDRO RUOTA	RADBREMSZYLINDER CILINDRO RUEDA

Handbrake Frein A Main Handbremse Freno A Mano Freno De Mano	30-25	Tie Rod Tringlerie Zugstange Tirante Brazo De Enlace

1-WG28-011-A

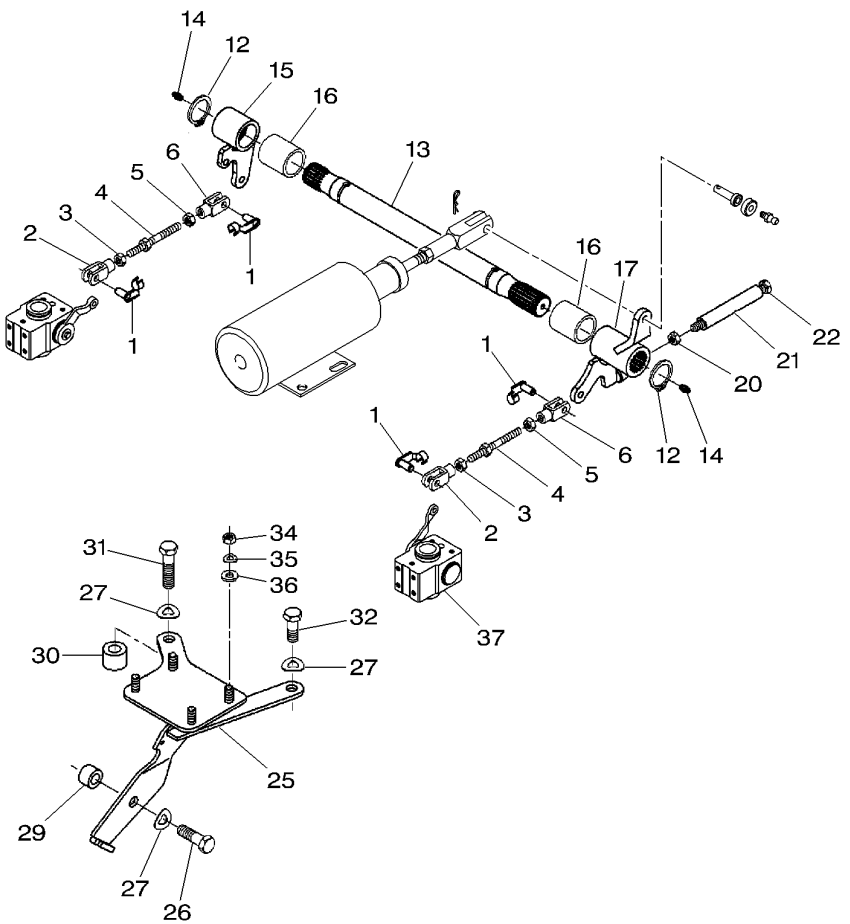

[A] ORDER + X662 516 200 000 (X2)
COMMANDER EN PLUS X662 516 200 000 (X2)
BESTELLE + X662 516 200 000 (X2)
ORDINARE + X662 516 200 000 (X2)
PEDIR + X662 516 200 000 (X2)

Wheel Shaft Housing
Carter D'Arbres De Roues
Hinterachsgehaeuse
Carcassa Di Crocera Ruota
Carter De Husillo De Rueda

30-30

1-WE70-005-B

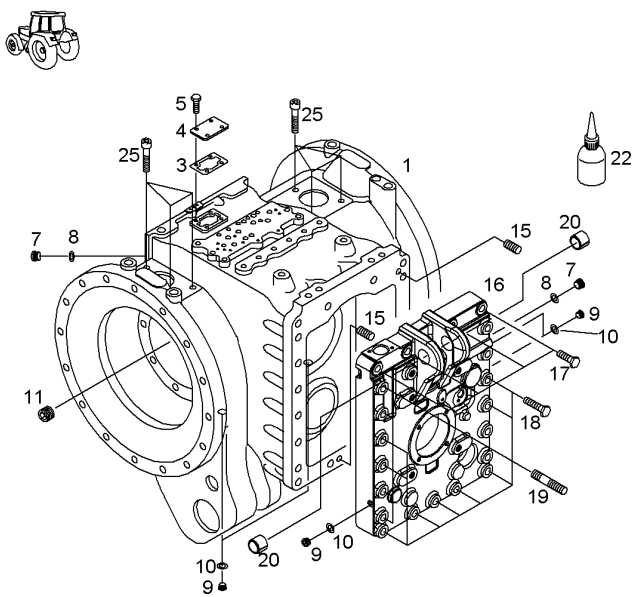

1*	926150050014		**1**	AXLE HOUSING	TROMPETTE CARCASSA ASSALE	ACHSGEHAEUSE CAJA DEL EJE
3	822100050140		**1**	GASKET	JOINT GIUNTO PIANO	FLACHDICHTUNG JUNTA PLANA
4	822100050130		**1**	COVER	COUVERCLE COPERCHIO	ABDECKUNG. CUBIERTA
5	X487526841000	M8 X 16	**4**	SCREW	VIS VITE	SCHRAUBE TORNILLO
7	X483800401000	M12 X 1,5	**2**	SCREW	VIS VITE	SCHRAUBE TORNILLO
8	X540003678000		**2**	RING	ANNEAU ANELLO	RING. ANILLO
9	X483800000000	M10 X 1	**5**	SCREW	VIS VITE	SCHRAUBE TORNILLO
10	X540003078000		**5**	RING	ANNEAU ANELLO	RING. ANILLO
11	X483500800000	M14 X 1,5	**2**	SCREW	VIS VITE	SCHRAUBE TORNILLO
15	X505578900000	M6 X 32	**2**	DOWEL	PLOT SPINA	ZYLINDERSTIFT CENTRAJE
16	926150050020	[A]	**1**	COVER	COUVERCLE COPERCHIO	ABDECKUNG. CUBIERTA
17	X487551400000	M18 X 90	**4**	SCREW	VIS VITE	SCHRAUBE TORNILLO
18	X486551706000	M18 X 110	**9**	SCREW	VIS VITE	SCHRAUBE TORNILLO
19	X482953200000	M18 X 130	**8**	STUD	GOUJON SPINOTTO FILETT.	STEHBOLZEN ESPARRAGO ROSCA.
20	X609715700000		**2**	BUSH	BAGUE BOCCOLA	RING CASQUILLO
22	X903050074000		**X**	LOCTITE	LOCTITE LOCTITE	LOCTITE LOCTITE
25	X485013605000		**6**	HEX. SOCK. SCREW	VIS TETE HEX VITE PARKER	ZYLINDERSCHRAUBE TORN.CAB.HUECA

[A] ORDER + X505 578 900 (X2)
COMMANDER EN PLUS X505 578 900 (X2)
BESTELLE + X505 578 900 (X2)
ORDINARE + X505 578 900 (X2)
PEDIR + X505 578 900 (X2)

Oil Level Indicator
Controle De Niveau D'Huile
Oelstandskontrolle
Control Livello Di Olio
Indicador Nivel De Aceite

30-35

1-WE71-002-A

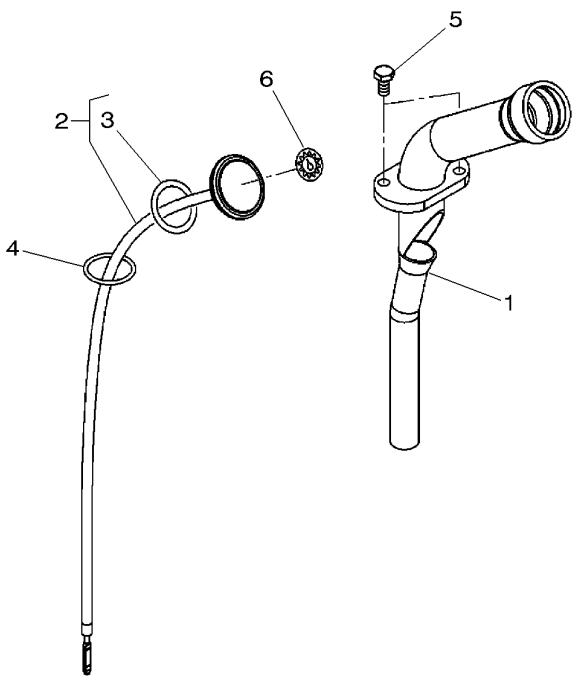

1	H926150480010		**1**	FILLER	REMPLISSEUR BOCCHETTONE	EINFUELLSTUTZEN RELLENADOR
2	H916100480020		**1**	OIL DIPSTICK	JAUGE D HUILE STECCA OLIO	OELMESSTAB VARILLA NIVEL A
3	F822100480010	2	**1**	JOINT.	JOINT PLAT GIUNTO	DICHTUNG JUNTA
4	X548895001000	34 X 3	**1**	O RING	JOINT TORIQUE GIUNTO DI TENUTA	O-RING JUNTA TOROIDAL
5	X487527741000	M8 X 20	**2**	SCREW	VIS VITE	SCHRAUBE TORNILLO
6	205100480010		**1**	DECAL	DECALCOMANIE DECALCOMANIA	AUFKLEBER CALCOMANIA

Differential
Differentiel
Ausgleichgetriebe
Differenziale
Differencial

30-40

1-WG60-002-A

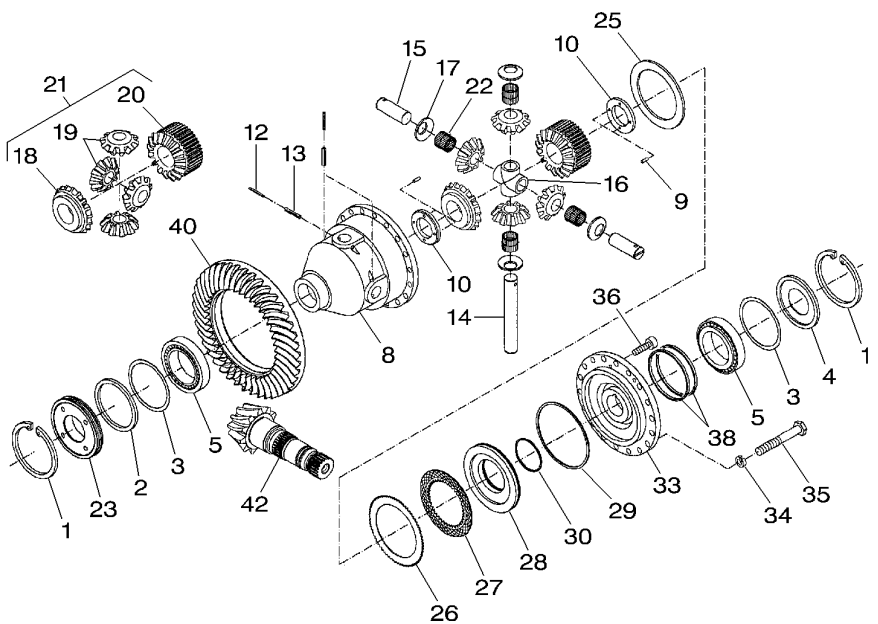

1	X530109946000			**2**	CIRCLIP	CIRCLIP ANNELLO ELASTICO	SEEGERING GRAPA CIRCULAR
2					NOT USED	NON UTILISE INUSATO	NICHT VERWENDET NO SE USA
3	X534683000000	⧗	0,15 MM	**X**	SHIM	CALE REGLAGE SPESSORE	AUSGLEICHSCHEIBE CALCE
3	X534683100000	⧗	0,20 MM	**X**	SHIM	CALE REGLAGE SPESSORE	AUSGLEICHSCHEIBE CALCE
3	X534683300000	⧗	0,30 MM	**X**	SHIM	CALE REGLAGE SPESSORE	AUSGLEICHSCHEIBE CALCE
3	X534683700000	⧗	0,50 MM	**X**	SHIM	CALE REGLAGE SPESSORE	AUSGLEICHSCHEIBE CALCE
4	822100010060			**1**	DISC	DISQUE DISCO	SCHEIBE DISCO
5	G822100150020			**2**	CUP AND CONE	CUVETTE ET CONE COPPA E CONO	KEGELROLLENLAGER PISTA Y CONO
8	926150010030			**1**	DIFF HOUSING	CARTER DIFF CARCASSA DIFFER.	DIFF.GEHAEUSE CARCASA DIFERENC
9	X506239300000	∅	6 X 20	**4**	DOWEL	PLOT SPINA	ZYLINDERSTIFT CENTRAJE
10	822100010210			**2**	RING	ANNEAU ANELLO	RING. ANILLO
12	X500622300000	∅	5 X 50	**3**	ROLL PIN	GOUPILLE ROULEE SPINA ELASTICA	SPANNHUELSE PASADOR ELASTICO
13	X500629146000	∅	8 X 50	**3**	ROLL PIN	GOUPILLE ROULEE SPINA ELASTICA	SPANNHUELSE PASADOR ELASTICO
14	926150010050			**1**	CLEVIS PIN	AXE PERNO D'ATTACCO	SPLINTBOLZEN BULON CILINDRICO
15	926150010060			**2**	CLEVIS PIN	AXE PERNO D'ATTACCO	SPLINTBOLZEN BULON CILINDRICO
16	926150010070			**1**	SUPPORT	SUPPORT SOPPORTO	TRAGER SOPORTE
17	926150010080			**4**	THRUST WASHER	RONDELLE BUTEE RONDELLA REGGISP	ANLAUFSCHEIBE ARANDELA ACELER
18		21	REF. 21	**1**	PLANET	PLANETAIRE PLANETARIO	PLANETENRAD PLANETARIO
19		21	REF. 21	**4**	DIFF PINION	SATELLITE PIGNONE DIFFEREN	DIFF.KEGELRAD PINON DIFERENC
20		21	REF. 21	**1**	PLANET	PLANETAIRE PLANETARIO	PLANETENRAD PLANETARIO
21	G926150010010			**1**	KIT, BEVEL GEAR	COUPLE CONIQUE KIT COPPIA CONIC	KEGELRADSATZ CORONA Y PINON
22	X622048500000			**4**	ROLLER CAGE	CAGE A ROULEAUX GABBIA A RULLINI	ROLLENKAEFIG JUALA RODILLO
23	926150010040			**1**	SPACER	ENTRETOISE DISTANZIALE	ABSTANDSTUECK DISCO ESPACIADOR
25	822100010140			**1**	RING	ANNEAU ANELLO	RING. ANILLO
26	822100010130			**10**	EXTERNAL DISC	DISQUE EXTERIEUR DISCO ESTERNO	AUSSENLAMELLE DISCO EXTERIOR
27	822100010120			**9**	INTERNAL DISC	DISQUE INTERIEUR DISCO INTERNO	INNENLAMELLE DISCO INTERIOR

Differential
Differentiel
Ausgleichgetriebe
Differenziale
Differencial

30-40

1-WG60-002-A

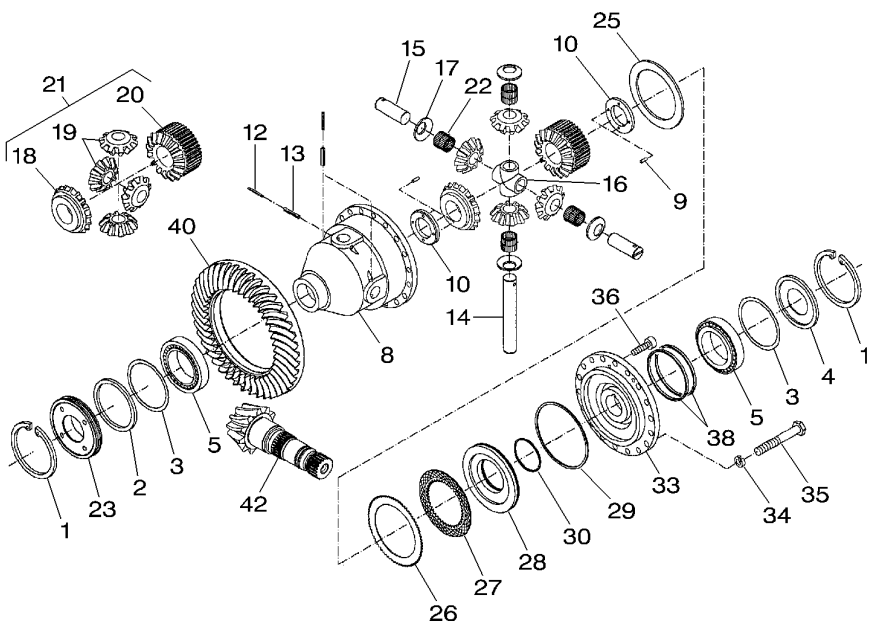

28	822100010160		**1**	PISTON	PISTON PISTONE	KOLBEN PISTON
29	822100010200		**1**	SUPPORT COVER	COUVERC. SUPPORT SUPPORT COVER	ABSTUETZDECKEL SUPPORT COVER
30	822100010190		**1**	SUPPORT COVER	COUVERC. SUPPORT SUPPORT COVER	ABSTUETZDECKEL SUPPORT COVER
33	822100010040		**1**	FLANGE	FLASQUE FLANGIA	FLANSCH PLETINA
34	345300100110		**18**	DISC	DISQUE DISCO	SCHEIBE DISCO
35	X486536200000	M8 X 30	**18**	SCREW	VIS VITE	SCHRAUBE TORNILLO
36	X485007605000	M8 X 30	**2**	HEX. SOCK. SCREW	VIS TETE HEX VITE PARKER	ZYLINDERSCHRAUBE TORN.CAB.HUECA
38	X560718800000	∅ 140 X 5,5	**2**	PLAIN COMPR.RING	SEGMENT RECTANG. PLAIN COMPR.RING	RECHTECKRING PLAIN COMPR.RING
40		30-50 No 19	**1**	ANNULAR GEAR	COURONNE CORONA DENTATA	ZAHNKRANZ ENGRANAJE ANULAR
42		30-50 No 18	**1**	PINION SHAFT	ARBRE DENTE ALBERO PIGNONE	RITZELWELLE EJE PINON

Bevel Drive
Couple Conique
Tellerradsatz
Corona E Pignone
Rueda Conica

30-45

1-WG71-004-A

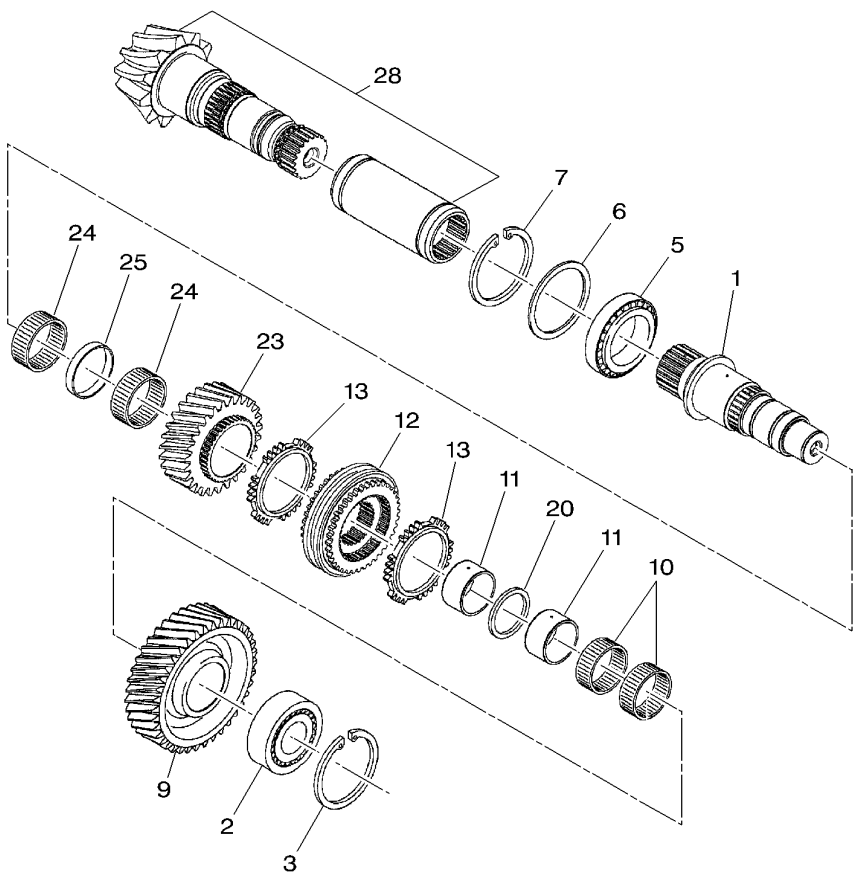

1	[A]	**1**	SHAFT	ARBRE ALBERO	WELLE ARBOL
2	[A]	**1**	BALL BEARING	ROULEMENT BILLES CUSCINETTO SFERE	KUGELLAGER COJINETE DE BOLA
3	[A]	**1**	CIRCLIP	CIRCLIP ANNELLO ELASTICO	SEEGERING GRAPA CIRCULAR
5	[A]	**1**	BALL BEARING	ROULEMENT BILLES CUSCINETTO SFERE	KUGELLAGER COJINETE DE BOLA
6	[A]	**1**	KIT, WASHER	JEU RONDELLES KIT RONDELLA	SCHEIBENSATZ JUEGO ARANDELAS
7	[A]	**1**	CIRCLIP	CIRCLIP ANNELLO ELASTICO	SEEGERING GRAPA CIRCULAR
9	[A] 40	**1**	PINION	PIGNON PIGNONE	RITZEL PINON
10	[A] 55 X 60 X 30	**2**	NEEDLE CAGE	CAGE A AIGUILLES PORTAGHI	NADELKAEFIG JUALA DE AGUJA
11	[A]	**2**	BUSH	BAGUE BOCCOLA	RING CASQUILLO
12	[A]	**1**	SYNCHRO UNIT	ENSEMBLE SYNCHRO UNITA DI SINCRON	SYNCHRONEINHEIT SINCRONIZADO
13	[A]	**2**	BUSH	BAGUE BOCCOLA	RING CASQUILLO
20	[A]	**1**	WASHER	RONDELLE RONDELLA	SCHEIBE ARANDELA
23	[A] 30	**1**	PINION	PIGNON PIGNONE	RITZEL PINON
24	[A] 60 X 65 X 20	**2**	NEEDLE CAGE	CAGE A AIGUILLES PORTAGHI	NADELKAEFIG JUALA DE AGUJA
25	[A]	**1**	INSERT	DOUILLE INSERTO	EINSATZSTUECK INSERCION
28	30-50 No 17	**1**	KIT, BEVEL GEAR	COUPLE CONIQUE KIT COPPIA CONIC	KEGELRADSATZ CORONA Y PINON

[A] NOT SUPPLIED SEPARATELY
NON FOURNI SEPAREMENT
NICHT MITGELIEFERT BESTELLEN
NON SERVITO SEPARATAMENTE
NO SUMINISTRADOSEPARADAMENTE

Bevel Drive
Couple Conique
Tellerradsatz
Corona E Pignone
Rueda Conica

30-50

1-WG71-003-A

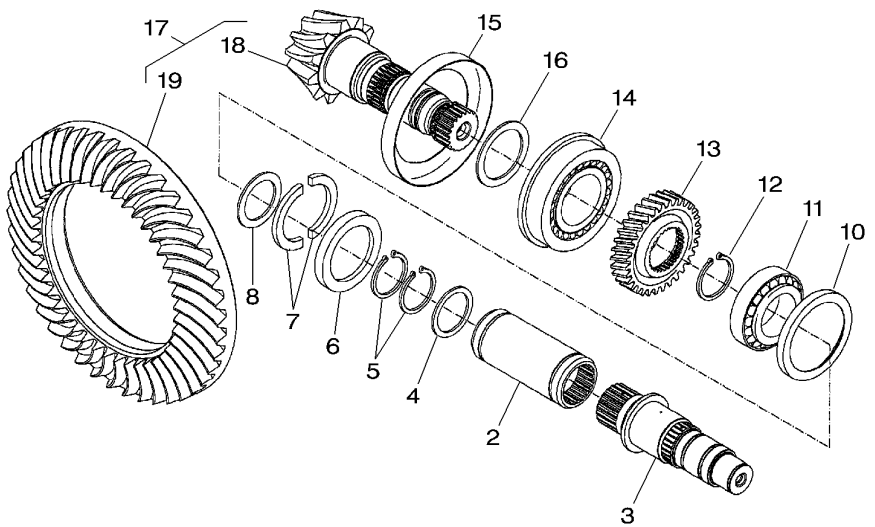

2	916101410010		**1**	THIMBLE	COSSE BUSSOLA	MUFFE DEDAL
3		30-45 No 1	**1**	SHAFT	ARBRE ALBERO	WELLE ARBOL
4	X534538900000		**1**	BACKUP RING	CONTRE BAGUE ANELLO APPOGGIO	STUETZRING ANILLA SOPORTE
5	X530017746000	∅ 55 X 3	**2**	CIRCLIP	CIRCLIP ANNELLO ELASTICO	SEEGERING GRAPA CIRCULAR
6	916100410030		**1**	RING	ANNEAU ANELLO	RING. ANILLO
7	916100410040		**2**	RING	ANNEAU ANELLO	RING. ANILLO
8	G001990200630		**1**	KIT, WASHER	JEU RONDELLES KIT RONDELLA	SCHEIBENSATZ JUEGO ARANDELAS
10	916100410060		**1**	SHEET METAL	CARROSSERIE CARROZZERIA	BLECH HOJA METALICA
11	X619072600007		**1**	CUP AND CONE	CUVETTE ET CONE COPPA E CONO	KEGELROLLENLAGER PISTA Y CONO
12	X530017846000	∅ 58 X 3	**1**	CIRCLIP	CIRCLIP ANNELLO ELASTICO	SEEGERING GRAPA CIRCULAR
13		60-50 No 3	**1**	PINION	PIGNON PIGNONE	RITZEL PINON
14	X619057201003	68 X 140 X 20	**1**	CUP AND CONE	CUVETTE ET CONE COPPA E CONO	KEGELROLLENLAGER PISTA Y CONO
15	926102410030		**1**	SHEET METAL	CARROSSERIE CARROZZERIA	BLECH HOJA METALICA
16	G001990200640		**1**	KIT, WASHER	JEU RONDELLES KIT RONDELLA	SCHEIBENSATZ JUEGO ARANDELAS
17		REF. 18 , 19 12 X 43	**1**	KIT, BEVEL GEAR	COUPLE CONIQUE KIT COPPIA CONIC	KEGELRADSATZ CORONA Y PINON
18	926102410040	17 12	**1**	PINION SHAFT	ARBRE DENTE ALBERO PIGNONE	RITZELWELLE EJE PINON
19	926102410020	17 43	**1**	CROWNWHEEL	COURONNE DENTEE CORONA	TELLERRAD CORONA DENTADA

Rear Axle Housings	Inner Final Drive Gear	30-55	
Trompettes D Essieu Arriere	Couronne Reduct.Finale Interieure		
Hinterachsgehaeuse	Endantrieb Innen		
Scatole Riduttori	Corona Interna		
Cajas De Eje Trasero	Pinon Interior De Mando Final		

1-WG18-005-A

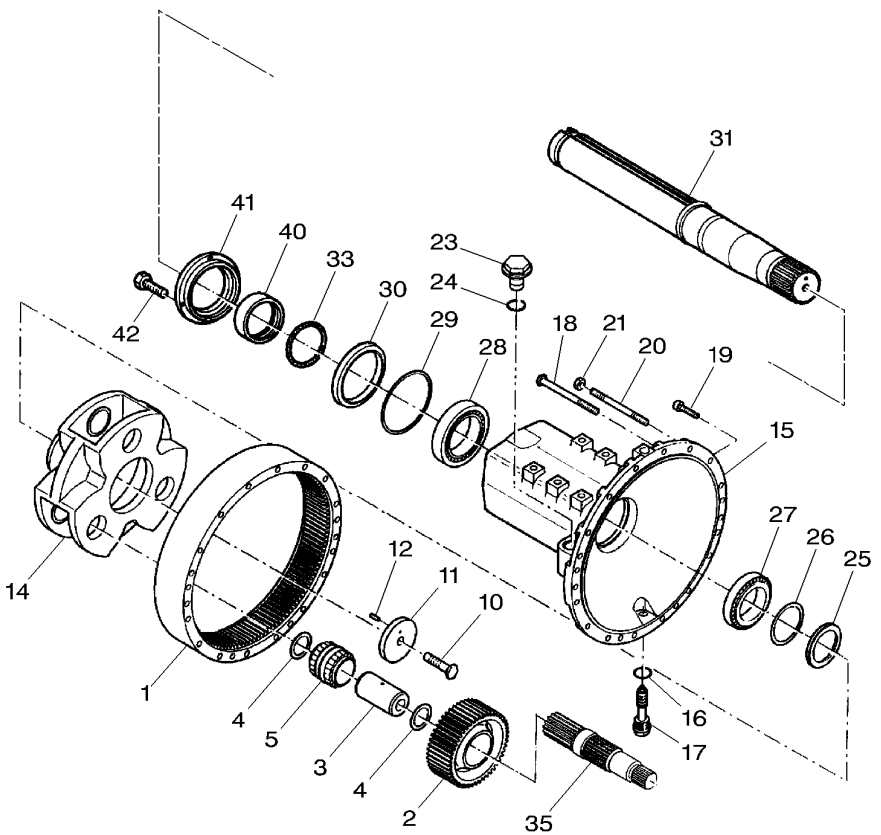

1	926150150032		**2**	PRESSURE PIPE	CASQUETTE. PRESSURE PIPE	DRUCKLEITUNG PRESSURE PIPE
2	926150150040	[B]	**6**	SPUR GEAR	ENGRENAGE DROIT INGRANAGGIO DIR.	STIRNRAD RUEDA DE DIENTES
3	926150150061		**6**	CLEVIS PIN	AXE PERNO D'ATTACCO	SPLINTBOLZEN BULON CILINDRICO
4	X530106546000	∅ 62 X 2	**12**	CIRCLIP	CIRCLIP ANNELLO ELASTICO	SEEGERING GRAPA CIRCULAR
5	G926150150050		**6**	ROLLER CAGE	CAGE A ROULEAUX GABBIA A RULLINI	ROLLENKAEFIG JUALA RODILLO
10	822100150120		**2**	SCREW	VIS VITE	SCHRAUBE TORNILLO
11	822100150080		**2**	PLATE	PLAQUE PIASTRA	PLATTE PLATO
12	X500628246000	∅ 8 X 22	**2**	ROLL PIN	GOUPILLE ROULEE SPINA ELASTICA	SPANNHUELSE PASADOR ELASTICO
14	926150150021		**2**	PLANET CARRIER	SUPPORT PLANET PORTA SATELLITE	PLANETENTRAEGER SOPORTE PLANETAR
15	926160150200		**2**	AXLE HOUSING	TROMPETTE CARCASSA ASSALE	ACHSGEHAEUSE CAJA DEL EJE
16	X540007478000		**2**	RING	ANNEAU ANELLO	RING. ANILLO
17	H822100150020		**2**	MAGNET	AIMANT MAGNETE.	MAGNET IMAN
18	X486537601000	M12 X 160	**40**	SCREW	VIS VITE	SCHRAUBE TORNILLO
19	X493619205000	M12 X 50	**4**	HEX. SOCK. SCREW	VIS TETE HEX VITE PARKER	ZYLINDERSCHRAUBE TORN.CAB.HUECA
20	X489138400000	M12 X 165	**8**	STUD	GOUJON SPINOTTO FILETT.	STEHBOLZEN ESPARRAGO ROSCA.
21	X428203205000		**8**	NUT	ECROU DADO	MUTTER TUERCA
23	X484404001000	M30	**4**	PLUG	BOUCHON TAPPO	STOPFEN TAPON
24	**X540009478000**		**4**	RING	ANNEAU ANELLO	RING. ANILLO
25	926101150240		**4**	RING	ANNEAU ANELLO	RING. ANILLO
26	X534781500000	⧗ 0,50 MM	**X**	SHIM	CALE REGLAGE SPESSORE	AUSGLEICHSCHEIBE CALCE
26	X534781600000	⧗ 0,60 MM	**X**	SHIM	CALE REGLAGE SPESSORE	AUSGLEICHSCHEIBE CALCE
26	X534781700000	⧗ 0,70 MM	**X**	SHIM	CALE REGLAGE SPESSORE	AUSGLEICHSCHEIBE CALCE
27	G926101150040		**2**	CUP AND CONE	CUVETTE ET CONE COPPA E CONO	KEGELROLLENLAGER PISTA Y CONO
28	G926160150200		**2**	CUP AND CONE	CUVETTE ET CONE COPPA E CONO	KEGELROLLENLAGER PISTA Y CONO
29	X549030900000	∅ 190,17 X 2,62	**2**	O RING	JOINT TORIQUE GIUNTO DI TENUTA	O-RING JUNTA TOROIDAL
30	H822100150040		**2**	OIL SEAL	BAGUE ETANCHEITE BOCCOLA PARAOLIO	OELDICHTRING BUJE RETENACEITE

Rear Axle Housings	Inner Final Drive Gear	30-55	
Trompettes D Essieu Arriere	Couronne Reduct.Finale Interieure		
Hinterachsgehaeuse	Endantrieb Innen		
Scatole Riduttori	Corona Interna		
Cajas De Eje Trasero	Pinon Interior De Mando Final		

1-WG18-005-A

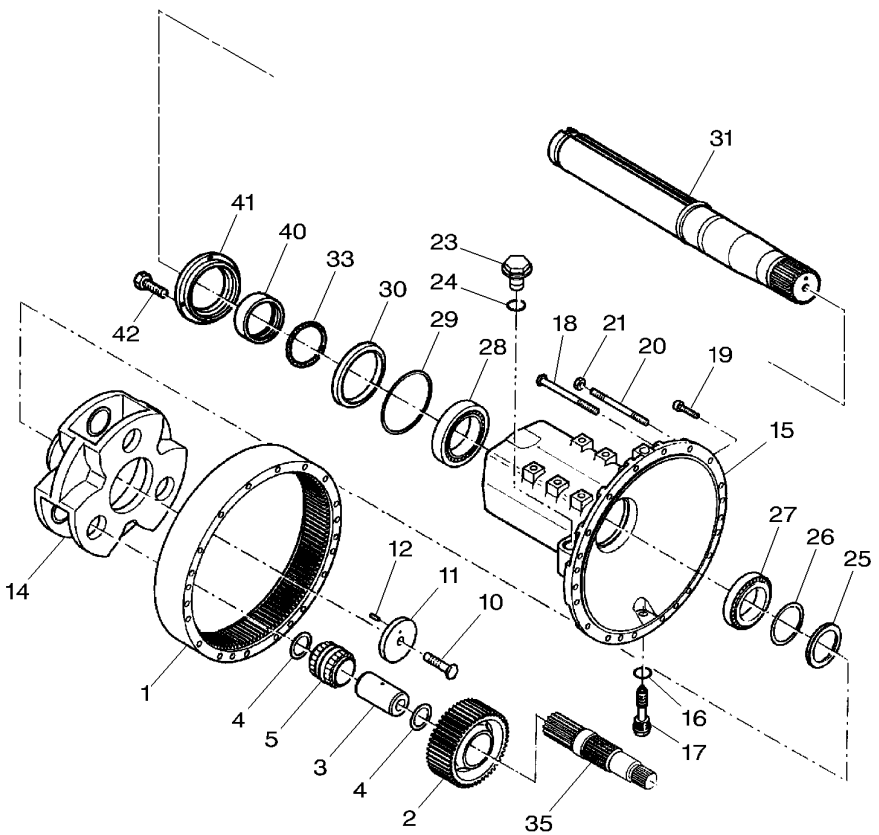

31	926101150070	29"	**2**	SHAFT	ARBRE ALBERO	WELLE ARBOL
31	926101150060	40"	**2**	SHAFT	ARBRE ALBERO	WELLE ARBOL
33	X548999066000	∅ 118 X 4	**2**	O RING	JOINT TORIQUE GIUNTO DI TENUTA	O-RING JUNTA TOROIDAL
35	H926150150200		**2**	SHAFT	ARBRE ALBERO	WELLE ARBOL
40	926101150260		**2**	SPACER	ENTRETOISE DISTANZIALE	ABSTANDSTUECK DISCO ESPACIADOR
41	926160150220		**2**	COVER	COUVERCLE COPERCHIO	ABDECKUNG. CUBIERTA
42	X487527741000	M8 X 20	**8**	SCREW	VIS VITE	SCHRAUBE TORNILLO

[B] ORDER + 926 150 150 061 + G926 150 150 050
COMMANDER EN PLUS 926 150 150 061 + G926 150 150 050
BESTELLE + 926 150 150 061 + G926 150 150 050
ORDINARE + 926 150 150 061 + G926 150 150 050
PEDIR + 926 150 150 061 + G926 150 150 050

Disc Brakes
Freins A Disques
Scheibenbremsen
Freno A Disco
Disco De Freno

30-60

1-WG14-003-A

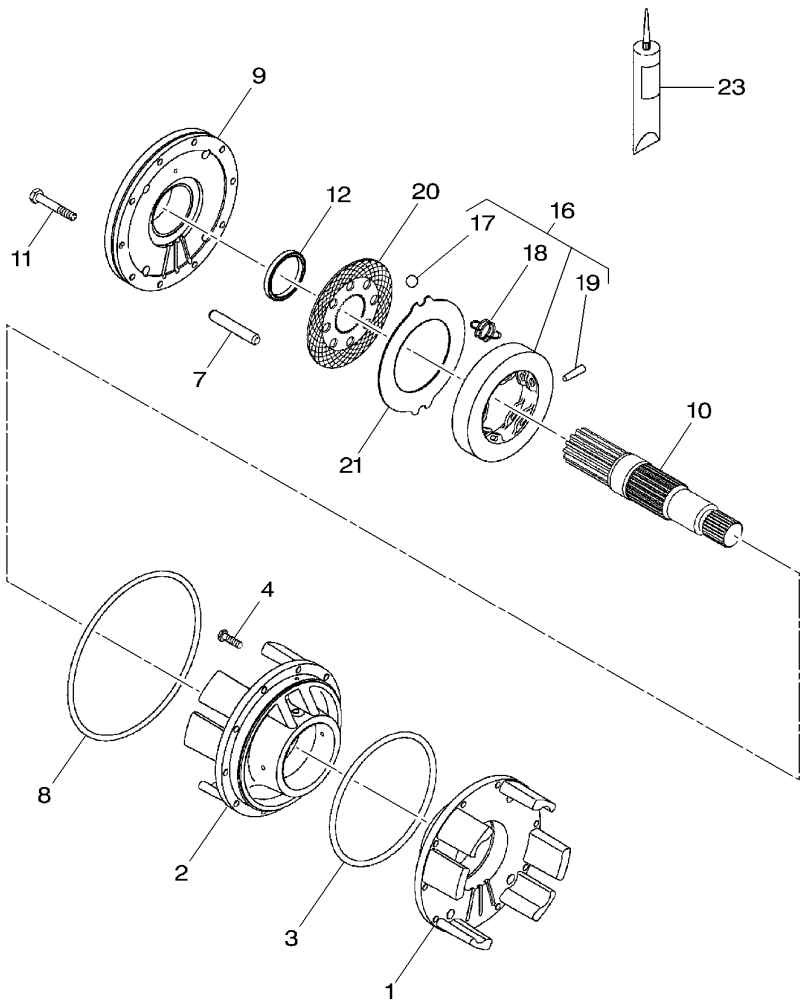

1	926150010020	▶	**1**	BEARING FLANGE	FLASQUE ROULT BEARING FLANGE	LAGERFLANSCH BEARING FLANGE
2	926150010010	◀	**1**	BEARING FLANGE	FLASQUE ROULT BEARING FLANGE	LAGERFLANSCH BEARING FLANGE
3	X549041100000	∅ 267 X 3	**1**	O RING	JOINT TORIQUE GIUNTO DI TENUTA	O-RING JUNTA TOROIDAL
4	X487535806000	M12 X 40	**4**	SCREW	VIS VITE	SCHRAUBE TORNILLO
7	926150150080		**8**	PIN	GOUPILLE COPPIGLIA	STIFT PASADOR
8	X549044100000	∅ 310 X 3	**2**	O RING	JOINT TORIQUE GIUNTO DI TENUTA	O-RING JUNTA TOROIDAL
9	926150150070		**2**	BRAKE PLATE	PLAQUETTE FREIN PIATTO FRENO	BREMSPLATTE PLATO DE FRENO
10		30-55 No 35	**2**	SHAFT	ARBRE ALBERO	WELLE ARBOL
11	X486537601000	M12 X 160	**20**	SCREW	VIS VITE	SCHRAUBE TORNILLO
12	X550150200000		**2**	OIL SEAL	BAGUE ETANCHEITE BOCCOLA PARAOLIO	OELDICHTRING BUJE RETENACEITE
16	F822100150010		**2**	DISC	DISQUE DISCO	SCHEIBE DISCO
17	F822100150020	16	**5**	BALL	BILLE SFERA	KUGEL BOLA
18	F822100150030	16	**5**	TENSION SPRING	RESSORT TRACTION MOLLA TENDITRICE	ZUGFEDER MUELLE TENSION
19	X505558539000	16	**2**	DOWEL	PLOT SPINA	ZYLINDERSTIFT CENTRAJE
20	F822100150040		**12**	BRAKE DISC	DISQUE DE FREIN DISCO FRENO	BREMSSCHEIBE DISCO DE FRENO
21	716150150500		**12**	EXTERNAL DISC	DISQUE EXTERIEUR DISCO ESTERNO	AUSSENLAMELLE DISCO EXTERIOR
23	X903050074000		**X**	LOCTITE	LOCTITE LOCTITE	LOCTITE LOCTITE

Cardan Brake
Frein A Cardan
Kardanwellenbremse
Freno Cardanico
Freno Cardan

30-65

1-WG15-002-A

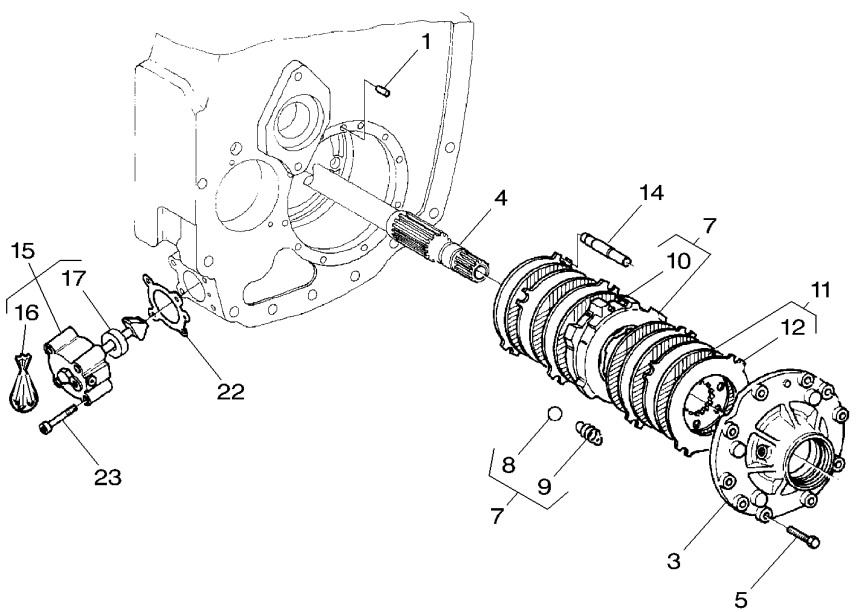

1	X505544539000	∅ 6 X 16	**1**	DOWEL	PLOT SPINA	ZYLINDERSTIFT CENTRAJE
3	916100320061		**1**	COVER	COUVERCLE COPERCHIO	ABDECKUNG. CUBIERTA
4		60-45 No 5	**1**	SHAFT	ARBRE ALBERO	WELLE ARBOL
5	X487531941000	M10 X 40	**10**	SCREW	VIS VITE	SCHRAUBE TORNILLO
7	G916100320030		**1**	DISC	DISQUE DISCO	SCHEIBE DISCO
8	F822100150020	7	**4**	BALL	BILLE SFERA	KUGEL BOLA
9	F822100150030	7	**4**	TENSION SPRING	RESSORT TRACTION MOLLA TENDITRICE	ZUGFEDER MUELLE TENSION
10	X505558539000	7	**2**	DOWEL	PLOT SPINA	ZYLINDERSTIFT CENTRAJE
11	G001990200330		**1**	PARTS PACK	JEU PIECES PACCO RICAMBI	SATZ TEILE PAQUETE PIEZAS
12		11 REF. 11	**1**	PLATE	PLAQUE PIASTRA	PLATTE PLATO
14	916100320190		**4**	PIN	GOUPILLE COPPIGLIA	STIFT PASADOR
15	G916100070030	[A]	**1**	CYLINDER	CYLINDRE CILINDRO	ZYLINDER CILINDRO
16	F916100070010	16	**1**	KIT, JOINT	JEU JOINTS KIT GIUNTO	DICHTUNGSSATZ JUEGO JUNTAS
17	F524101070170	16	**1**	SEAL	JOINT ETANCHEITE GIUNTO ROTONDO	DICHTRING JUNTA REDONDA
22	916100070010		**1**	GASKET	JOINT GIUNTO PIANO	FLACHDICHTUNG JUNTA PLANA
23	X485008606000	M8 X 80	**4**	HEX. SOCK. SCREW	VIS TETE HEX VITE PARKER	ZYLINDERSCHRAUBE TORN.CAB.HUECA

[A] ORDER + 916 100 070 010
COMMANDER EN PLUS 916 100 070 010
BESTELLE + 916 100 070 010
ORDINARE + 916 100 070 010
PEDIR + 916 100 070 010

Lift Arms
Bras De Relevage
Hubarme
Sollevamento Bracci
Brazos Elevador

30-70

1-WP74-003-A

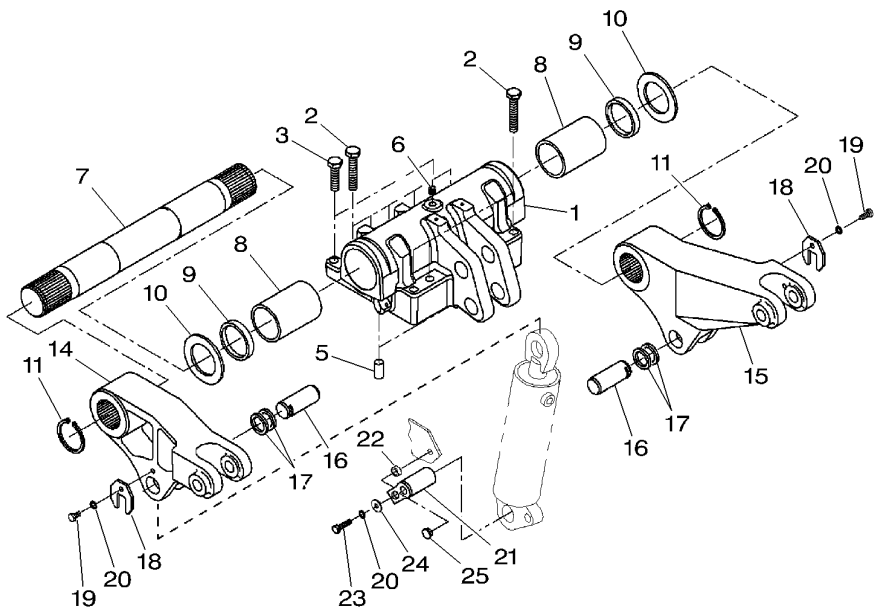

1	G930860030010		**1**	SUPPORT	SUPPORT SOPPORTO	TRAGER SOPORTE
2	X486551800000	M18 X 120	**10**	SCREW	VIS VITE	SCHRAUBE TORNILLO
3	X486551000000	M18 X 70	**2**	SCREW	VIS VITE	SCHRAUBE TORNILLO
5	X505585617000	∅ 6 X 36	**2**	DOWEL	PLOT SPINA	ZYLINDERSTIFT CENTRAJE
6	X483501600000	M18	**1**	SCREW	VIS VITE	SCHRAUBE TORNILLO
7	816860030110		**1**	SHAFT	ARBRE ALBERO	WELLE ARBOL
8	816860030040		**2**	BUSH	BAGUE BOCCOLA	RING CASQUILLO
9	X550150400000	80 X 100 X 10	**2**	OIL SEAL	BAGUE ETANCHEITE BOCCOLA PARAOLIO	OELDICHTRING BUJE RETENACEITE
10	816860030050		**2**	DISC	DISQUE DISCO	SCHEIBE DISCO
11	X530007246000		**2**	CIRCLIP	CIRCLIP ANNELLO ELASTICO	SEEGERING GRAPA CIRCULAR
14	903860030010		**1**	ARM	BRAS BRACCIO	SCHARHEBEL BRAZO
15	903860030020		**1**	ARM	BRAS BRACCIO	SCHARHEBEL BRAZO
16	716860030080		**2**	PIN	GOUPILLE COPPIGLIA	STIFT PASADOR
17	816860030070		**4**	RING	ANNEAU ANELLO	RING. ANILLO
18	716920010100		**2**	LOCKING PLATE	PLAQUE BLOCAGE PIASTRA DI FERMO	SICH.BLECH PLACA DE BLOCAJE
19	X487531301000	M10 X 20	**2**	SCREW	VIS VITE	SCHRAUBE TORNILLO
20	X520804401000		**4**	LOCK WASHER	RONDELLE FREIN RONDELLA ARRESTO	SICHERUNGSRING ARANDELA SEGURID
21	H816860030042		**2**	PIN	GOUPILLE COPPIGLIA	STIFT PASADOR
22	816870030060		**2**	BUSH	BAGUE BOCCOLA	RING CASQUILLO
23	X487531541000	M10 X 25	**2**	SCREW	VIS VITE	SCHRAUBE TORNILLO
24	X454407508000		**2**	DISC	DISQUE DISCO	SCHEIBE DISCO
25	X499501100000		**2**	PLUG	BOUCHON TAPPO	STOPFEN TAPON

Angle Sensor
Capteur D'Angle
Winkelsensor
Sensor Di Angolo
Captador De Angulo

30-75

1-WQ20-002-A

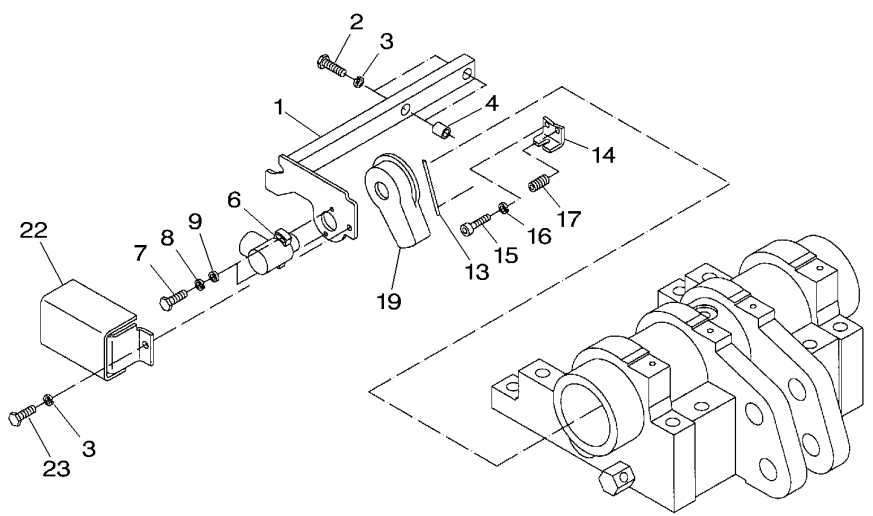

1	H816860100022		**1**	HOLDER	PIECE SUPPORT SUPPORTO DI BASE	HALTER SUJETADOR
2	X487528141000	M8 X 30	**2**	SCREW	VIS VITE	SCHRAUBE TORNILLO
3	X520803901000		**3**	LOCK WASHER	RONDELLE FREIN RONDELLA ARRESTO	SICHERUNGSRING ARANDELA SEGURID
4	816860100120		**2**	BUSH	BAGUE BOCCOLA	RING CASQUILLO
6	***G716861100020**		**1**	SENSOR	DETECTEUR SENSORE	SENSOR DETECTOR
7	X485002501000	M5 X 12	**2**	HEX. SOCK. SCREW	VIS TETE HEX VITE PARKER	ZYLINDERSCHRAUBE TORN.CAB.HUECA
8	X520802601000		**2**	LOCK WASHER	RONDELLE FREIN RONDELLA ARRESTO	SICHERUNGSRING ARANDELA SEGURID
9	X450003908000		**2**	DISC	DISQUE DISCO	SCHEIBE DISCO
13	816860100080		**1**	SPRING WIRE	FIL DE RESSORT FILO ELASTICO	FEDERDRAHT ALAMBRE MUELLE
14	816860100032		**1**	ANGLE.	EQUERRE. ANGOLO	WINKEL ANGULO
15	X485009405000	M8 X 16	**1**	HEX. SOCK. SCREW	VIS TETE HEX VITE PARKER	ZYLINDERSCHRAUBE TORN.CAB.HUECA
16	X523703900000		**1**	LOCK WASHER	RONDELLE FREIN RONDELLA ARRESTO	SICHERUNGSRING ARANDELA SEGURID
17	X500628246000	∅ 8 X 22	**1**	ROLL PIN	GOUPILLE ROULEE SPINA ELASTICA	SPANNHUELSE PASADOR ELASTICO
19	816860100020		**1**	COVER	COUVERCLE COPERCHIO	ABDECKUNG. CUBIERTA
22	524860100100		**1**	PROTECTOR	PROTECTEUR PROTETTORE	SCHUTZ PROTECTOR
23	X487527441000	M8 X 12	**1**	SCREW	VIS VITE	SCHRAUBE TORNILLO

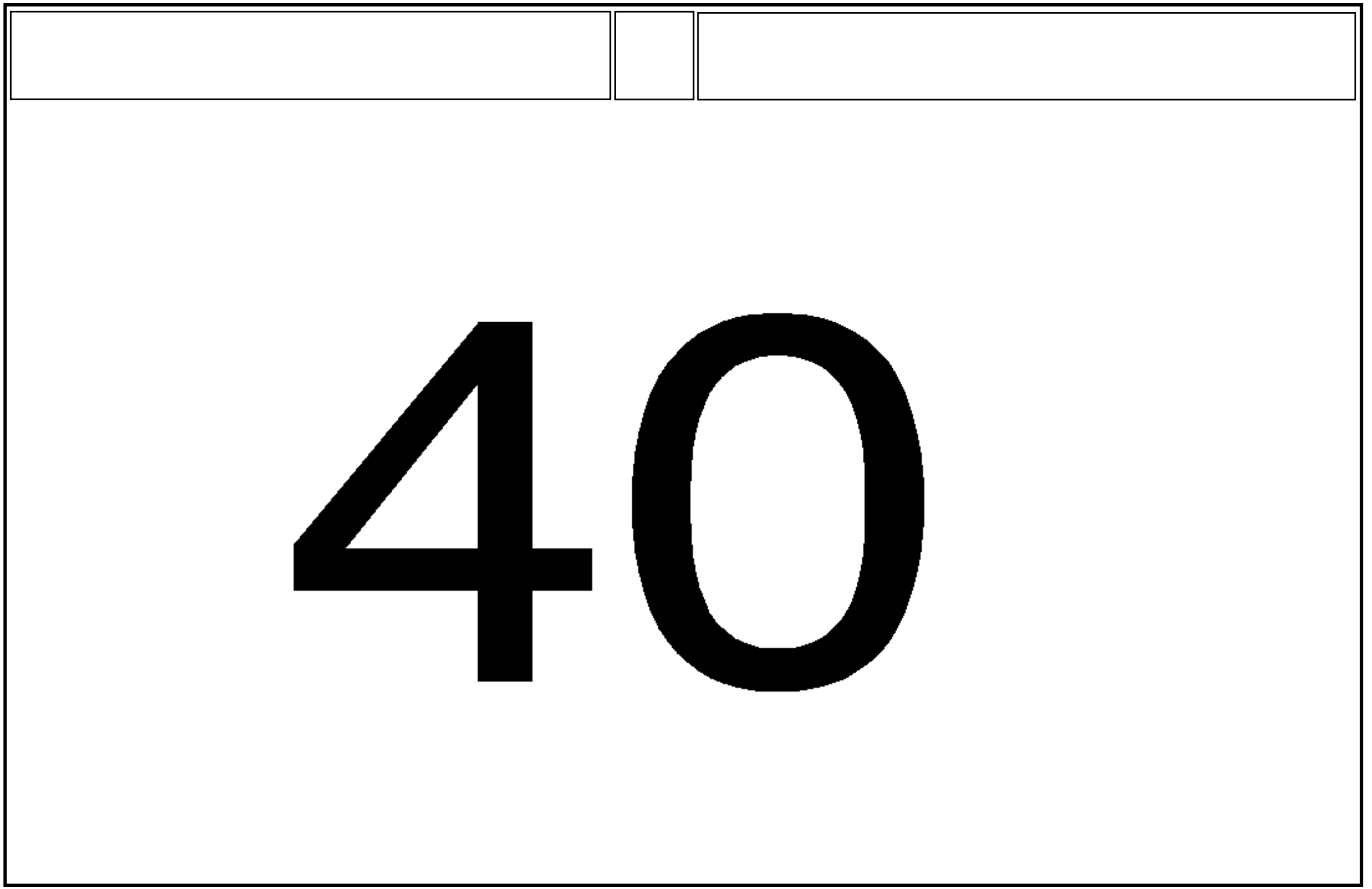

40

Lift Cylinders
Verins De Relevage
Druckzylinder
Cilindro Di Sollevatore
Gato Hidraulico

40-5

From 903/00101 - Up To 903/00300 - From 903/01001 - Up To 903/01470
A Partir Du 903/00101 - Jusqu'Au 903/00300 - A Partir Du 903/01001 - Jusqu'Au 903/01470
Ab 903/00101 - Bis 903/00300 - Ab 903/01001 - Bis 903/01470
Dalla 903/00101 - Fino 903/00300 - Dalla 903/01001 - Fino 903/01470
A Partir Del 903/00101 - Hasta 903/00300 - A Partir Del 903/01001 - Hasta 903/01470

1-WQ17-011-A

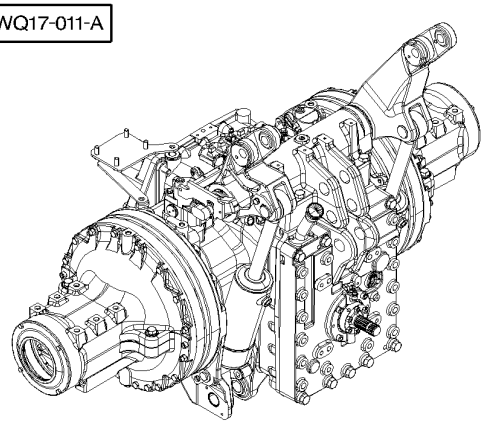

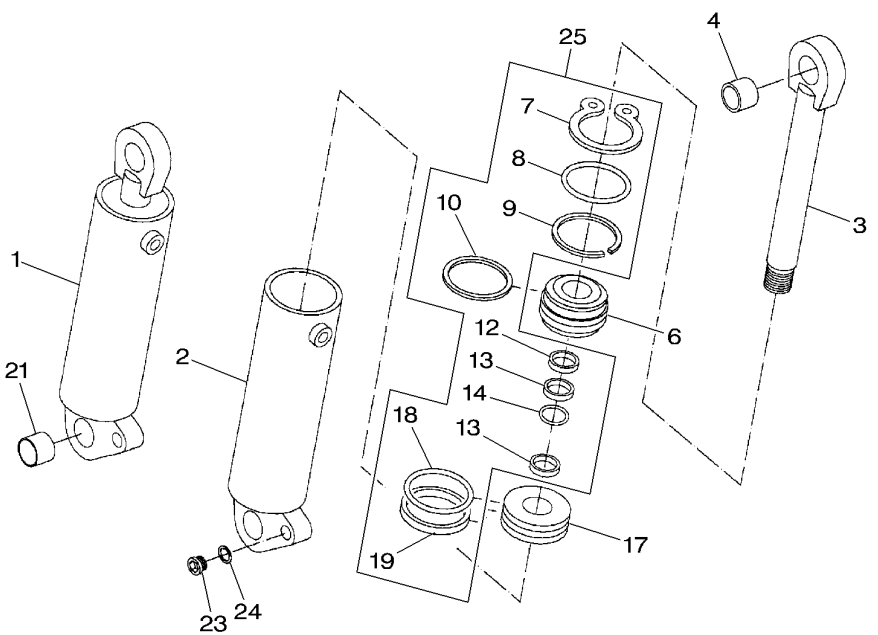

1	G924860030011	[A] 40/100;247/452	**2**	HYDRAULIC, CYLIN	VERIN HYDRAULI. CILINDRO IDRAULI	HYDRAULIK ZYLIND CILINDRO IDRAULI
2		1 REF. 1	**1**	BODY	CORPS CORPO	RUMPF CUERPO
3	F924860030030	1	**1**	ROD	TRINGLE ASTA	STANGE VARILLA
4	X605028000000	1	**1**	BEARING BUSH	BAGUE ROULEMENT BOCCOLA CUSCINET	LAGERBUCHSE BUJE DE COJINETE
6	F924860030010	1	**1**	GUIDE BUSH	BAGUE GUIDE BUSSOLA GUIDA	FUEHRUNGSBUCHSE CASQUILLO GUIA
7	X530008300000	1 ∅ 95 X 3	**1**	CIRCLIP	CIRCLIP ANNELLO ELASTICO	SEEGERING GRAPA CIRCULAR
8	X548972066000	1 ∅ 88 X 3	**1**	O RING	JOINT TORIQUE GIUNTO DI TENUTA	O-RING JUNTA TOROIDAL
9	F924860030020	1	**1**	SNAPRING	SEGMENT ARRET ANELLO SIEGER	SPRENGRING ANILLA RETENCION
10	X547583600000	1 93,8 X 6,9	**1**	SUMP GASKET	JOINT CARTER HUI SUMP GASKET	FORMDICHTUNG JUNTA DE PERFIL
12	X540410601000	1	**1**	STRIPPER	DEBOURREUR SPOGLIATORE	ABSTREIFER DESBARBADOR
13	X560240001000	1	**2**	RING	ANNEAU ANELLO	RING. ANILLO
14	X548317400000	1 40 X 48 X 7	**1**	V-SEAL	BAGUE RAINURE V-SEAL	NUTRING V-SEAL
17	F924860030050	1	**1**	PISTON	PISTON PISTONE	KOLBEN PISTON
18	X560242800000	1	**1**	RING	ANNEAU ANELLO	RING. ANILLO
19	X547587200000	1	**1**	SUMP GASKET	JOINT CARTER HUI SUMP GASKET	FORMDICHTUNG JUNTA DE PERFIL
21	X605018000000	1	**1**	BEARING BUSH	BAGUE ROULEMENT BOCCOLA CUSCINET	LAGERBUCHSE BUJE DE COJINETE
23	X483801600000	1 M18	**1**	SCREW	VIS VITE	SCHRAUBE TORNILLO
24	X540005478000	1	**1**	RING	ANNEAU ANELLO	RING. ANILLO
25	G001990011310	[B]	**1**	KIT, SEAL	JEU ETANCHEITE KIT TENUTA	DICHTRINGSATZ RETENES JUEGO

[A] INCLUDE ITEMS 2 TO 24
COMPREND ITEMS 2 A 24
BEINHALTET POS NR 2 BIS 24
INCLUDE IL NUMEROS 2 A 24
INCLUYE EL NO 2 A 24

[B] INCLUDE ITEMS 7 TO 10-12 TO 14-18-19
COMPREND ITEMS 7 A 10-12 A 14-18-19
BEINHALTET POS NR 7 BIS 10-12 BIS 14-18-19
INCLUDE IL NUMEROS 7 A 10-12 A 14-18-19
INCLUYE EL NO 7 A 10-12 A 14-18-19

Lift Cylinders
Verins De Relevage
Druckzylinder
Cilindro Di Sollevatore
Gato Hidraulico

40-10

From 903/01471
A Partir Du 903/01471
Ab 903/01471
Dalla 903/01471
A Partir Del 903/01471

1-WQ17-019-A

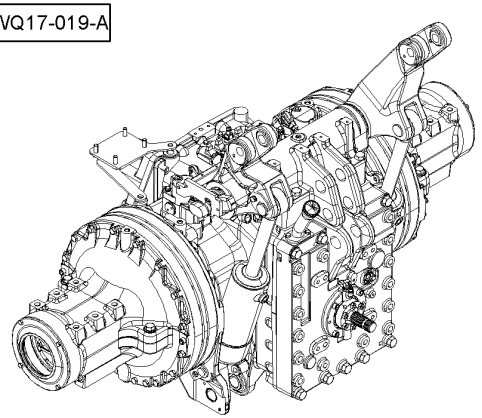

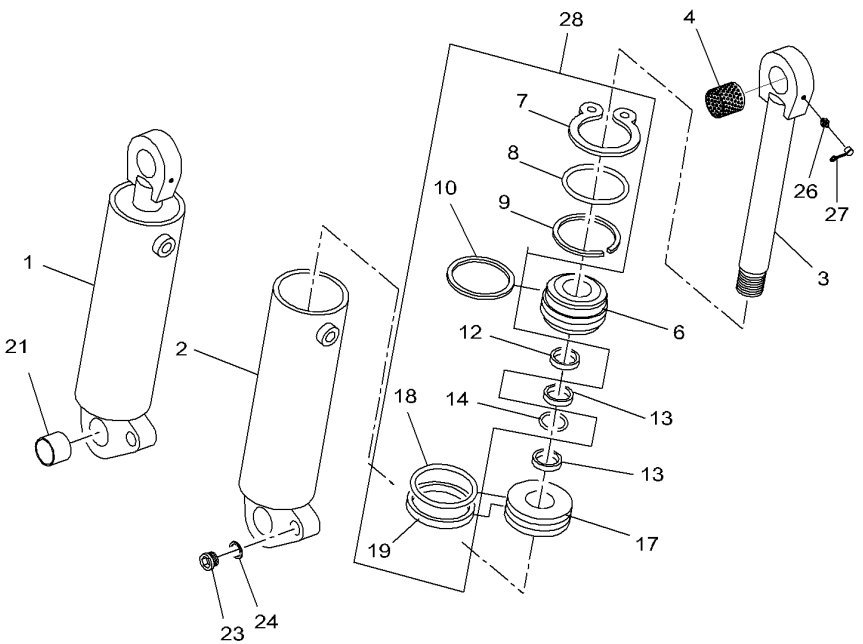

1	G930860030020	[A] 40/100;247/452	**2**	D.A.HYDR.CYLIND.	VERIN DOUB.EFFET D.A.HYDR.CYLIND.	DW.HYDRO-ZYLIND. D.A.HYDR.CYLIND.
2		1 REF. 1	**1**	BODY	CORPS CORPO	RUMPF CUERPO
3	F411860030050	1	**1**	ROD	TRINGLE ASTA	STANGE VARILLA
4	X609535400000	1	**1**	BUSH	BAGUE BOCCOLA	RING CASQUILLO
6	F924860030010	1	**1**	GUIDE BUSH	BAGUE GUIDE BUSSOLA GUIDA	FUEHRUNGSBUCHSE CASQUILLO GUIA
7	X530008300000	1 ∅ 95 X 3	**1**	CIRCLIP	CIRCLIP ANNELLO ELASTICO	SEEGERING GRAPA CIRCULAR
8	X548972066000	1 ∅ 88 X 3	**1**	O RING	JOINT TORIQUE GIUNTO DI TENUTA	O-RING JUNTA TOROIDAL
9	F924860030020	1	**1**	SNAPRING	SEGMENT ARRET ANELLO SIEGER	SPRENGRING ANILLA RETENCION
10	X547583600000	1 93,8 X 6,9	**1**	SUMP GASKET	JOINT CARTER HUI SUMP GASKET	FORMDICHTUNG JUNTA DE PERFIL
12	X540410601000	1	**1**	STRIPPER	DEBOURREUR SPOGLIATORE	ABSTREIFER DESBARBADOR
13	X560240001000	1	**2**	RING	ANNEAU ANELLO	RING. ANILLO
14	X548317400000	1 40 X 48 X 7	**1**	V-SEAL	BAGUE RAINURE V-SEAL	NUTRING V-SEAL
17	F924860030050	1	**1**	PISTON	PISTON PISTONE	KOLBEN PISTON
18	X560242800000	1	**1**	RING	ANNEAU ANELLO	RING. ANILLO
19	X547587200000	1	**1**	SUMP GASKET	JOINT CARTER HUI SUMP GASKET	FORMDICHTUNG JUNTA DE PERFIL
21	X605018000000	1	**1**	BEARING BUSH	BAGUE ROULEMENT BOCCOLA CUSCINET	LAGERBUCHSE BUJE DE COJINETE
23	X483801600000	1 M18	**1**	SCREW	VIS VITE	SCHRAUBE TORNILLO
24	X540005478000	1	**1**	RING	ANNEAU ANELLO	RING. ANILLO
26	X662516200000	1	**1**	GREASE NIPPLE	GRAISSEUR DROIT INGRASSAT.	FETT-NIPPEL ENGRASADOR
27	X562504000000	1	**1**	CAP	CHAPEAU CAPUCHON	KAPPE TAPA
28	G001990011310	[B]	**1**	KIT, SEAL	JEU ETANCHEITE KIT TENUTA	DICHTRINGSATZ RETENES JUEGO

[A] INCLUDE ITEMS 2 TO 27
COMPREND ITEMS 2 A 27
BEINHALTET POS NR 2 BIS 27
INCLUDE IL NUMEROS 2 A 27
INCLUYE EL NO 2 A 27

[B] INCLUDE ITEMS 7 TO 10-12 TO 14-18-19
COMPREND ITEMS 7 A 10-12 A 14-18-19
BEINHALTET POS NR 7 BIS 10-12 BIS 14-18-19
INCLUDE IL NUMEROS 7 A 10-12 A 14-18-19
INCLUYE EL NO 7 A 10-12 A 14-18-19

Lift Cylinders Feeding
Alimentation Verin De Relevage
Druckzylinderversorgung
Alimentazione Cilindro Di Sollevatore
Alimentacion Gato Hidraulico

40-15

1-WP08-010-C

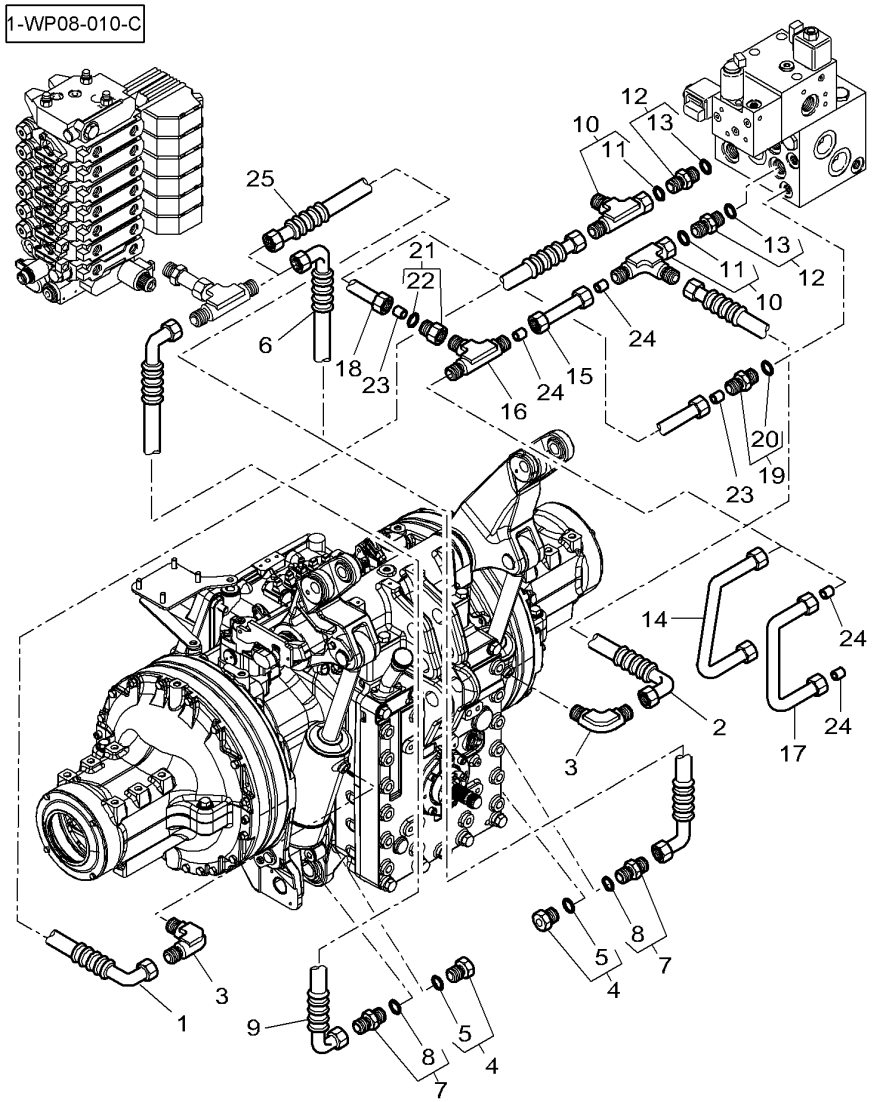

1	4276134M1	◀▶ 1100MM	**1**	HYDR. HOSE	FLEXIBLE TUBOFLEX IDRAUL	HYDR. SCHLAUCH TUBO HIDRAULICO
2	4276135M1	◀▶ 1050MM	**1**	HYDR. HOSE	FLEXIBLE TUBOFLEX IDRAUL	HYDR. SCHLAUCH TUBO HIDRAULICO
3	4276131M1		**2**	UNION	RACCORD RACCORDO	VERSCHRAUBUNG RACOR
4		👁 40-5 No	**2**	PLUG	BOUCHON TAPPO	STOPFEN TAPON
5		4	**1**	GASKET	JOINT GIUNTO PIANO	FLACHDICHTUNG JUNTA PLANA
6	4276136M1	◀▶ 1400MM ➡| R321048	**1**	HYDR. HOSE	FLEXIBLE TUBOFLEX IDRAUL	HYDR. SCHLAUCH TUBO HIDRAULICO
7	338717X91	M18	**2**	UNION	RACCORD RACCORDO	VERSCHRAUBUNG RACOR
8	338764X1	7	**1**	SEAL	JOINT ETANCHEITE GIUNTO ROTONDO	DICHTRING JUNTA REDONDA
9	4276137M3	◀▶ 1000MM	**1**	HYDR. HOSE	FLEXIBLE TUBOFLEX IDRAUL	HYDR. SCHLAUCH TUBO HIDRAULICO
10	3011089X91		**2**	UNION	RACCORD RACCORDO	VERSCHRAUBUNG RACOR
11	3011147X1	10	**1**	O RING	JOINT TORIQUE GIUNTO DI TENUTA	O-RING JUNTA TOROIDAL
12	3011040X91	M22X1.5	**2**	UNION	RACCORD RACCORDO	VERSCHRAUBUNG RACOR
13	3011036X1	12	**1**	SEAL	JOINT ETANCHEITE GIUNTO ROTONDO	DICHTRING JUNTA REDONDA
14	4276170M1	➡| R247010	**1**	TUBE	TUBE TUBO.	ROHR TUBO.
15*	4286041M1	[A]	**1**	TUBE	TUBE TUBO.	ROHR TUBO.
16	338738X1	[A]	**1**	UNION	RACCORD RACCORDO	VERSCHRAUBUNG RACOR
17*	4280535M2	➡ R247011	**1**	TUBE	TUBE TUBO.	ROHR TUBO.
18*	4285462M2	➡ R247011	**1**	TUBE	TUBE TUBO.	ROHR TUBO.
19*	338795X91	➡ R247011	**1**	UNION	RACCORD RACCORDO	VERSCHRAUBUNG RACOR
20*	338762X1	19 ➡ R247011	**1**	SEAL	JOINT ETANCHEITE GIUNTO ROTONDO	DICHTRING JUNTA REDONDA
21*	3011070X91	➡ R247011	**1**	UNION	RACCORD RACCORDO	VERSCHRAUBUNG RACOR
22*	3011147X1	21 ➡ R247011	**1**	O RING	JOINT TORIQUE GIUNTO DI TENUTA	O-RING JUNTA TOROIDAL
23*	3011805X1	➡ R247011	**2**	BUSH	BAGUE BOCCOLA	RING CASQUILLO
24*	3011807X1	➡ R153046 ➡| R247010	**2**	BUSH	BAGUE BOCCOLA	RING CASQUILLO
24*	3011807X1	➡ R247011	**4**	BUSH	BAGUE BOCCOLA	RING CASQUILLO

Lift Cylinders Feeding
Alimentation Verin De Relevage
Druckzylinderversorgung
Alimentazione Cilindro Di Sollevatore
Alimentacion Gato Hidraulico

40-15

1-WP08-010-C

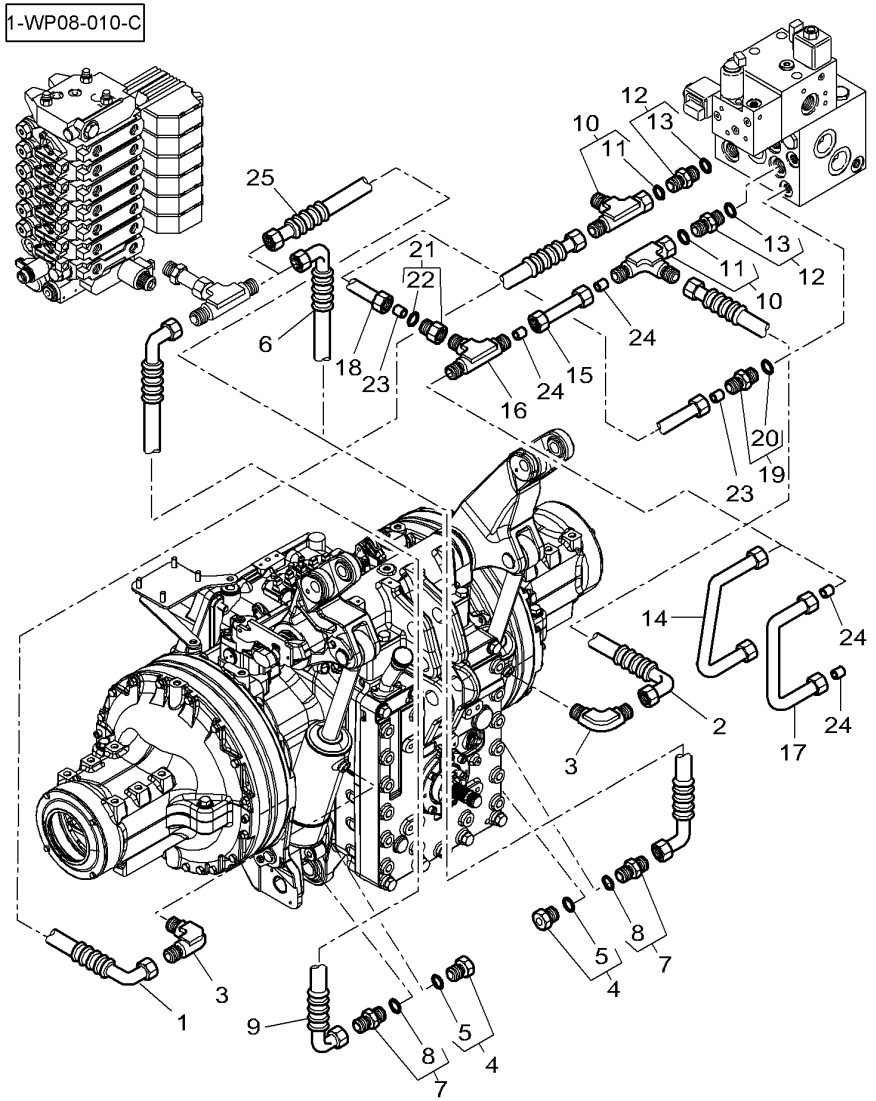

25* 4276136M2 [B]
◀▶ 1200 MM
➡ R321049

1 HYDR. HOSE — FLEXIBLE — TUBOFLEX IDRAUL — HYDR. SCHLAUCH — TUBO HIDRAULICO

[A] WITH FRONT AXLE SUSPENDED
AVEC PONT AVANT SUSPENDU
MIT HAENGE VORDERASCHSE
CON ASSALE ANTERIORE SOSPESO
CON EJE DELANTERO SUSPENDIDO

[B] VALID ALSO FOR TRACTOR R313045
VALABLE EGALEMENT POUR TRACTEUR R313045
GULTIG EBENFALLS FUR TRAKTOR R313045
VALIDO ANCHE PER TRATTORE R313045
VALIDO TAMBIEN PARA TRACTOR R313045

Levelling Box
Boitier De Nivellement
Verstellgehaeuse
Scatola Livello
Caja Niveladora

40-20

1-WQ32-007-A

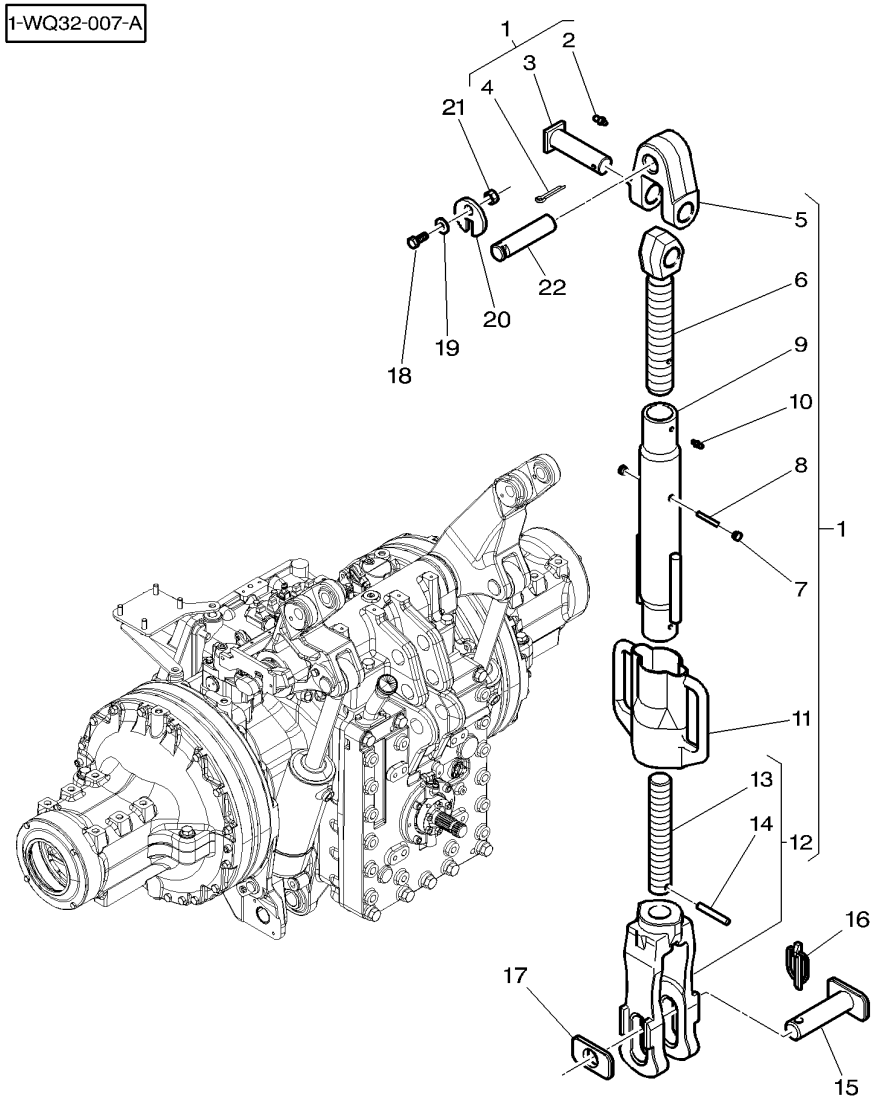

1	4271564M91	◀▶ 820/920 MM	**2**	DRAGLINK	TIRANT MAGLIA PER DRAGA	SCHUBSTANGE ENGANCHE DE TIRO
1*	4286628M91	[B] ◀▶ 720/920 MM	**2**	DRAGLINK	TIRANT MAGLIA PER DRAGA	SCHUBSTANGE ENGANCHE DE TIRO
2	339608X1	1 M10	**1**	GREASE FITTING	GRAISSEUR INGRASSATORE	DRUCKSCHMIERKOPF ENGRASADOR
3	3715690M1	1	**1**	CLEVIS PIN	AXE PERNO D'ATTACCO	SPLINTBOLZEN BULON CILINDRICO
4	354092X1	1	**1**	PIN	GOUPILLE COPPIGLIA	STIFT PASADOR
5	4271819M1	1	**1**	CLEVIS	CHAPE GANCIO D'ATTACCO	GABELSTUECK GANCHO SEGURI.
6*	3788407M1	1 [A]	**1**	DRAGLINK	TIRANT MAGLIA PER DRAGA	SCHUBSTANGE ENGANCHE DE TIRO
6*	4285856M1	1 [B]	**1**	DRAGLINK	TIRANT MAGLIA PER DRAGA	SCHUBSTANGE ENGANCHE DE TIRO
7	3789540M1	1	**2**	PLUG	BOUCHON TAPPO	STOPFEN TAPON
8	339135X1	1	**1**	PIN	GOUPILLE COPPIGLIA	STIFT PASADOR
9		1 REF No 1	**1**	TUBE	TUBE TUBO.	ROHR TUBO.
10	3715689M1	1 M6	**2**	GREASE FITTING	GRAISSEUR INGRASSATORE	DRUCKSCHMIERKOPF ENGRASADOR
11*	4270811M1	1 [A]	**1**	GRIP	POIGNEE MANIGLIA	HANDGRIFF MANGO
11*	4286640M1	1 [B]	**1**	GRIP	POIGNEE MANIGLIA	HANDGRIFF MANGO
12*	3788403M91	1 [A]	**1**	CLEVIS	CHAPE GANCIO D'ATTACCO	GABELSTUECK GANCHO SEGURI.
12*	4286639M91	1 [B]	**1**	CLEVIS	CHAPE GANCIO D'ATTACCO	GABELSTUECK GANCHO SEGURI.
13*	3788405M1	12 [A] M36 X 179 MM	**1**	CLEVIS PIN	AXE PERNO D'ATTACCO	SPLINTBOLZEN BULON CILINDRICO
13*	4286638M1	12 [B] M36 X 210 MM	**1**	CLEVIS PIN	AXE PERNO D'ATTACCO	SPLINTBOLZEN BULON CILINDRICO
14	339307X1	12 ∅ 6 X 50	**1**	PIN	GOUPILLE COPPIGLIA	STIFT PASADOR
15	3788414M1		**2**	CLEVIS PIN	AXE PERNO D'ATTACCO	SPLINTBOLZEN BULON CILINDRICO
16	3792034M1		**2**	PIN	GOUPILLE COPPIGLIA	STIFT PASADOR
17	3788415M1		**2**	PLATE	PLAQUE PIASTRA	PLATTE PLATO
18	339451X1	M10 X 30	**2**	HEX. SOCK. SCREW	VIS TETE HEX VITE PARKER	ZYLINDERSCHRAUBE TORN.CAB.HUECA
19	390597X1	∅ 10-30 X 2,5	**2**	FLAT WASHER	RONDELLE PLATE RONDELLE PIANA	UNTERLEGSCHEIBEN ARANDELA PLANA
20	926870030020		**2**	LOCKING PLATE	PLAQUE BLOCAGE PIASTRA DI FERMO	SICH.BLECH PLACA DE BLOCAJE
21	926870030030		**2**	BUSH	BAGUE BOCCOLA	RING CASQUILLO

Levelling Box
Boitier De Nivellement
Verstellgehaeuse
Scatola Livello
Caja Niveladora

40-20

1-WQ32-007-A

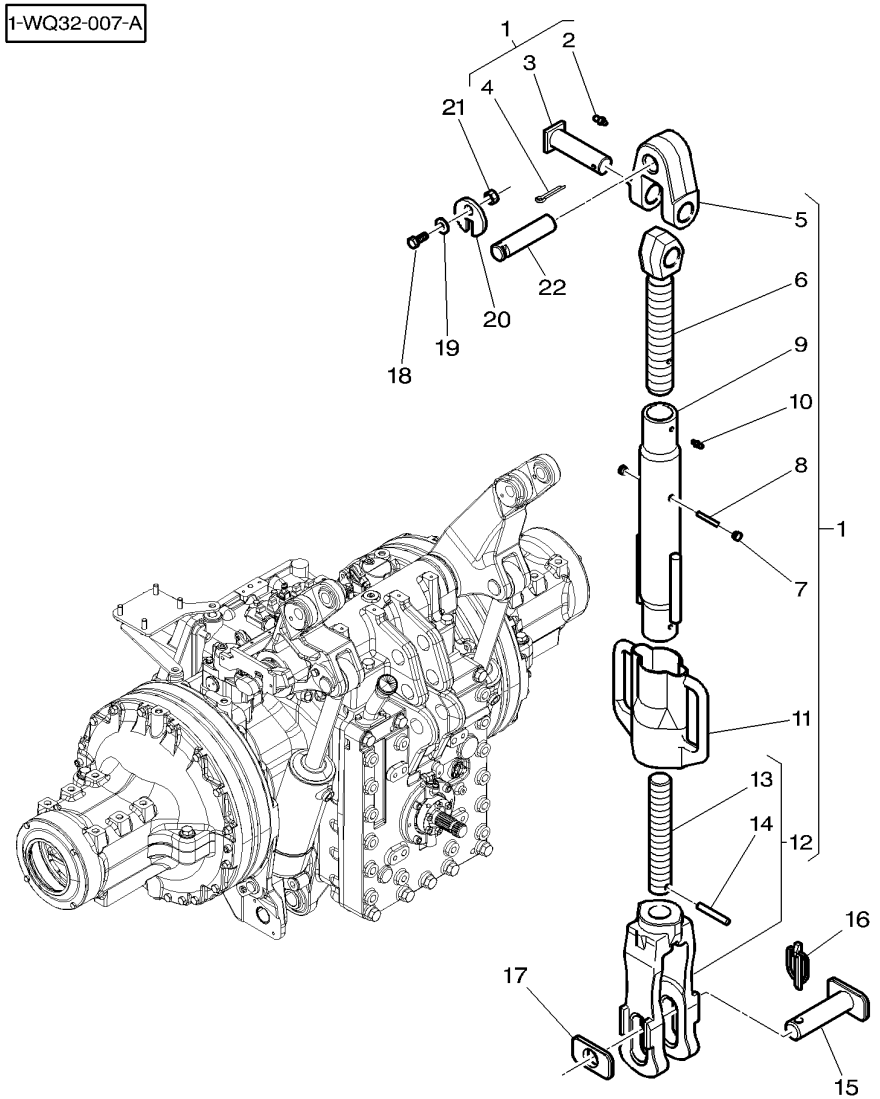

22	926870030010	**2** PIN	GOUPILLE COPPIGLIA	STIFT PASADOR

[A] FOR LEVELLING BOX 820/920 MM
POUR BOITIER DE NIVELLEMENT 820/920 MM
MIT VERSTELLGEHAEUSE 820/920 MM
CON SCATOLA LIVELLO 820/920 MM
CON CAJA NIVELADORA 820/920 MM

[B] FOR LEVELLING BOX 720/920 MM
POUR BOITIER DE NIVELLEMENT 720/920 MM
MIT VERSTELLGEHAEUSE 720/920 MM
CON SCATOLA LIVELLO 720/920 MM
CON CAJA NIVELADORA 720/920 MM

Top Link With Hook End
Barre De 3eme Point A Crochet
Oberlenker Mit Haken
Maglia Superior Con Ganci
Barra Enganche Con Gancho

40-25

1-WQ07-012-B

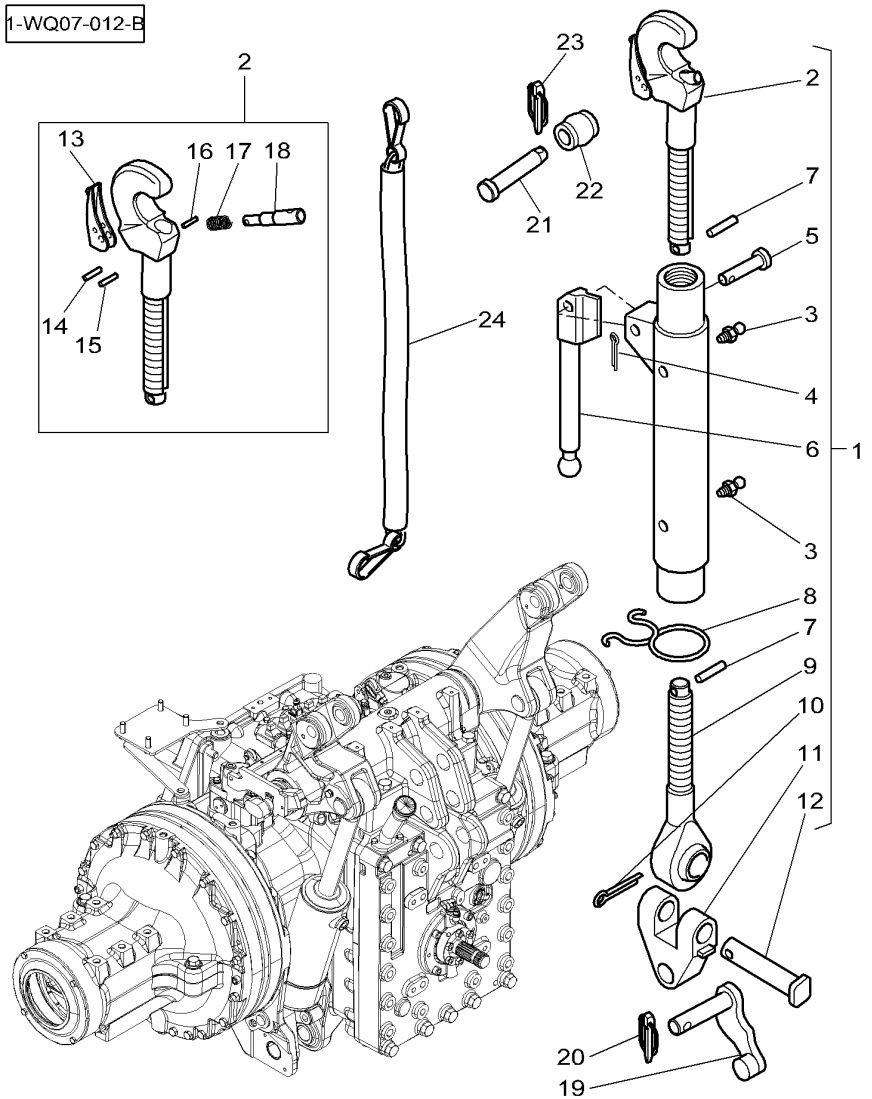

1	4271217M91	CAT 3 ◀▶ 754/974MM		**1**	TOP LINK	BARRE DE POUSSEE PUTONE	OBERLENKER UNION SUPERIOR
2	4271219M91	1 CAT 3		**1**	HOOK	CROCHET GANCIO	HAKEN GANCHO
3	339608X1	1		**2**	GREASE FITTING	GRAISSEUR INGRASSATORE	DRUCKSCHMIERKOPF ENGRASADOR
4	1442967X1	1		**1**	SPLIT PIN	GOUPILLE FENDUE COPIGLIA	SPALTBOLZEN PASADOR HENDIDO
5	4271225M1	1		**1**	PIN	GOUPILLE COPPIGLIA	STIFT PASADOR
6	4271224M1	1		**1**	GRIP	POIGNEE MANIGLIA	HANDGRIFF MANGO
7	339192X1	1		**2**	PIN	GOUPILLE COPPIGLIA	STIFT PASADOR
8	4271557M1	1		**1**	SPRING	RESSORT MOLLA	FEDER MUELLE
9	4271221M1	1		**1**	DRAGLINK	TIRANT MAGLIA PER DRAGA	SCHUBSTANGE ENGANCHE DE TIRO
10	354092X1	1		**1**	PIN	GOUPILLE COPPIGLIA	STIFT PASADOR
11	4271222M1	1		**1**	CLEVIS	CHAPE GANCIO D'ATTACCO	GABELSTUECK GANCHO SEGURI.
12	4271223M1	1		**1**	PLATE	PLAQUE PIASTRA	PLATTE PLATO
13	3796211M91	2		**1**	LEVER	LEVIER LEVA	HEBEL PALANCA
14	339080X1	2	∅ 6 X 24MM	**1**	ROLL PIN	GOUPILLE ROULEE SPINA ELASTICA	SPANNHUELSE PASADOR ELASTICO
15	390538X1	2	∅ 5 X 24MM	**1**	PIN	GOUPILLE COPPIGLIA	STIFT PASADOR
16	339806X1	2		**1**	PIN	GOUPILLE COPPIGLIA	STIFT PASADOR
17	3788537M1	2		**1**	SPRING	RESSORT MOLLA	FEDER MUELLE
18	3715849M2	2		**1**	CLEVIS PIN	AXE PERNO D'ATTACCO	SPLINTBOLZEN BULON CILINDRICO
19	H926870050021			**1**	PIN	GOUPILLE COPPIGLIA	STIFT PASADOR
20	3387161M2		∅ 12 X 45MM	**1**	PIN	GOUPILLE COPPIGLIA	STIFT PASADOR
21	3582043M2	CAT 2/3		**1**	PIN	GOUPILLE COPPIGLIA	STIFT PASADOR
21	367073X1	CAT 3		**1**	CLEVIS PIN	AXE PERNO D'ATTACCO	SPLINTBOLZEN BULON CILINDRICO
22	**3042433M1**	CAT 2/3		**1**	TOGGLE	ROTULE ROTULA	GELENKZAPFEN ROTULA
22*	**4303393M1**	CAT 3		**1**	TOGGLE	ROTULE ROTULA	GELENKZAPFEN ROTULA
23	3387161M2			**1**	PIN	GOUPILLE COPPIGLIA	STIFT PASADOR
24	3619219M1	◀▶ 3700 MM		**1**	CHAIN	CHAINE CATENA	KETTE CADENA

Top Link With Hook End
Barre De 3eme Point A Crochet
Oberlenker Mit Haken
Maglia Superior Con Ganci
Barra Enganche Con Gancho

40-25

1-WQ07-012-B

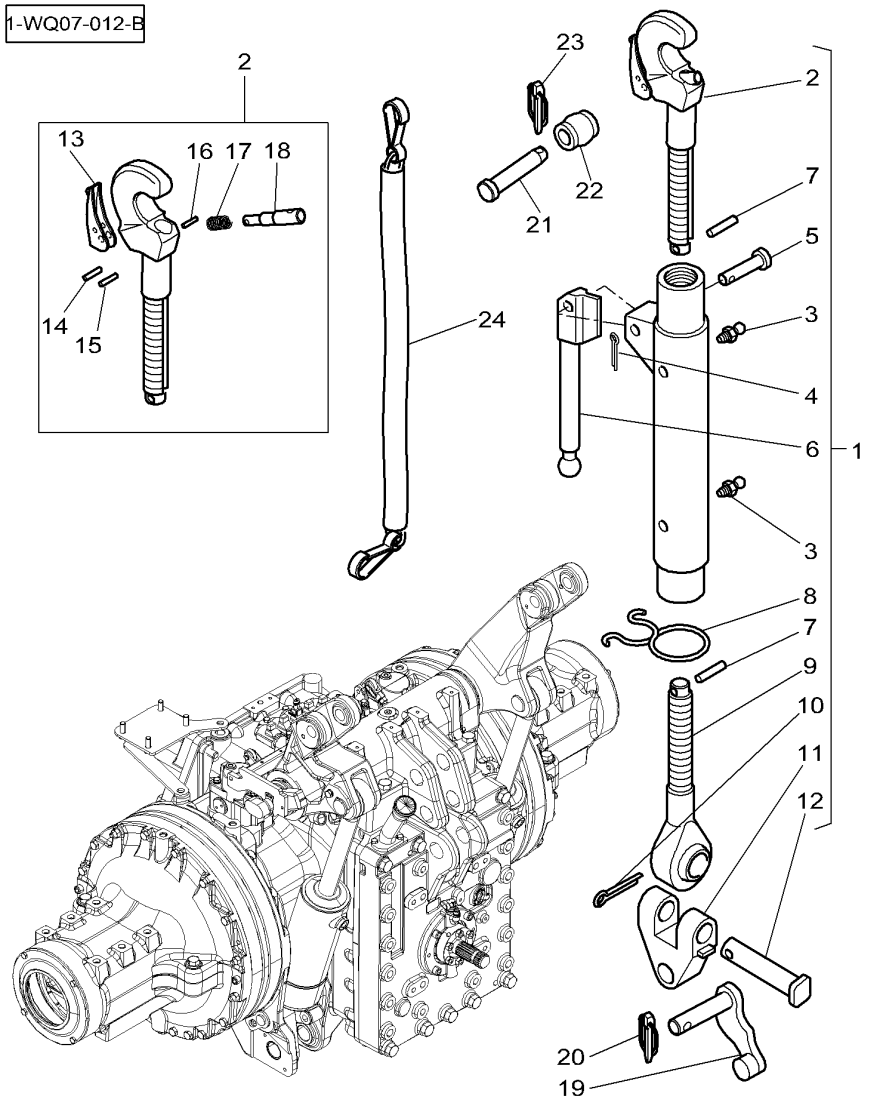

24	3903995M1	◀▶ 1500 MM	**1** CHAIN	CHAINE CATENA	KETTE CADENA

Top Link With Ball End
Barre De 3eme Point A Rotule
Oberlenker Mit Kugelgelenk
Maglia Superior Con Snodo Sferico
Barra Enganche Con Bola

40-30

1-WQ08-011-B

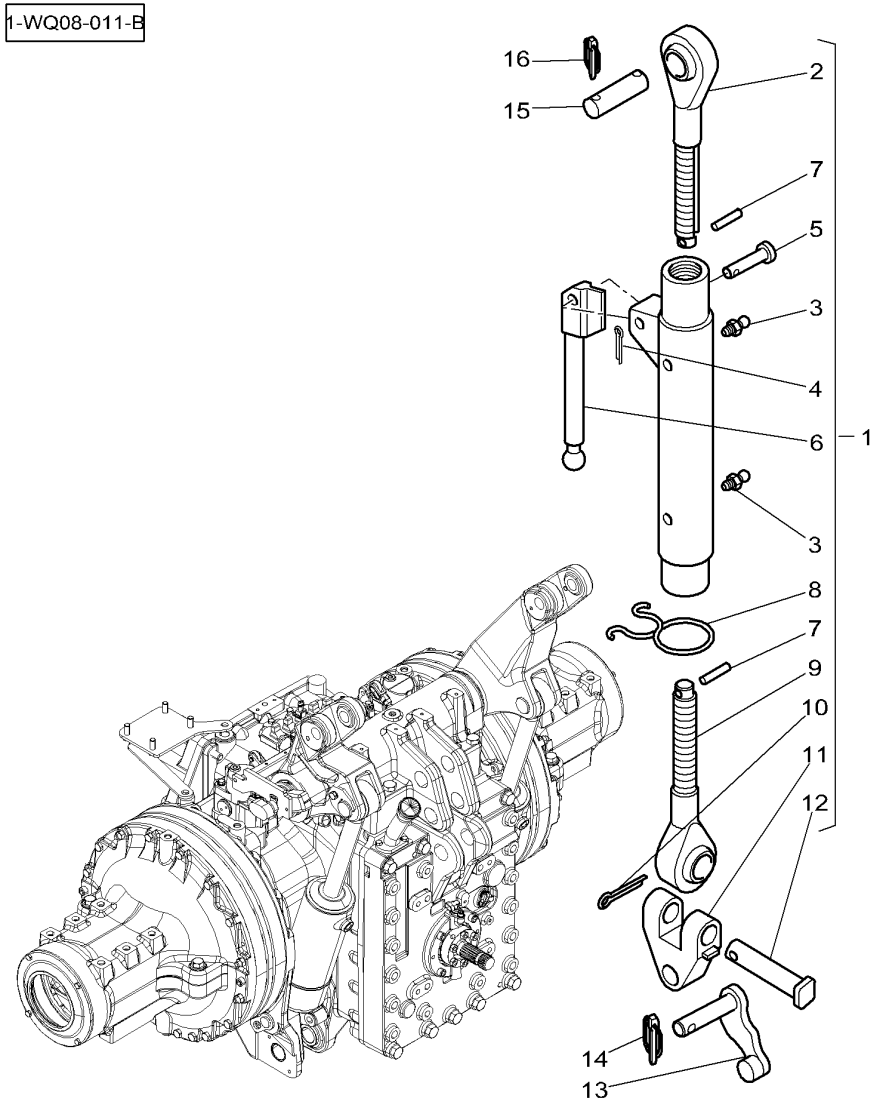

1	4275811M91	CAT 3 ◀▶ 754/974MM		**1**	TOP LINK	BARRE DE POUSSEE PUTONE	OBERLENKER UNION SUPERIOR
2	4275809M91	1 CAT 3		**1**	DRAGLINK	TIRANT MAGLIA PER DRAGA	SCHUBSTANGE ENGANCHE DE TIRO
3	339608X1	1		**2**	GREASE FITTING	GRAISSEUR INGRASSATORE	DRUCKSCHMIERKOPF ENGRASADOR
4	1442967X1	1		**1**	SPLIT PIN	GOUPILLE FENDUE COPIGLIA	SPALTBOLZEN PASADOR HENDIDO
5	4271225M1	1		**1**	PIN	GOUPILLE COPPIGLIA	STIFT PASADOR
6	4271224M1	1		**1**	GRIP	POIGNEE MANIGLIA	HANDGRIFF MANGO
7	339192X1	1		**2**	PIN	GOUPILLE COPPIGLIA	STIFT PASADOR
8	4271557M1	1		**1**	SPRING	RESSORT MOLLA	FEDER MUELLE
9	4275810M1	1		**1**	DRAGLINK	TIRANT MAGLIA PER DRAGA	SCHUBSTANGE ENGANCHE DE TIRO
10	354092X1	1		**1**	PIN	GOUPILLE COPPIGLIA	STIFT PASADOR
11	4271222M1	1		**1**	CLEVIS	CHAPE GANCIO D'ATTACCO	GABELSTUECK GANCHO SEGURI.
12	4271223M1	1		**1**	PLATE	PLAQUE PIASTRA	PLATTE PLATO
13	H926870050021			**1**	PIN	GOUPILLE COPPIGLIA	STIFT PASADOR
14	3387161M2		∅ 12 X 45MM	**1**	PIN	GOUPILLE COPPIGLIA	STIFT PASADOR
15	184870050020			**1**	BUSH	BAGUE BOCCOLA	RING CASQUILLO
16	3387161M2			**1**	PIN	GOUPILLE COPPIGLIA	STIFT PASADOR

Top Link Lock
Verrouillage Barre De 3eme Point
Oberlenkerriegel
Cerrojo Barra Superior
Chiavistello Barra Superior

40-35

1-WQ34-011-A

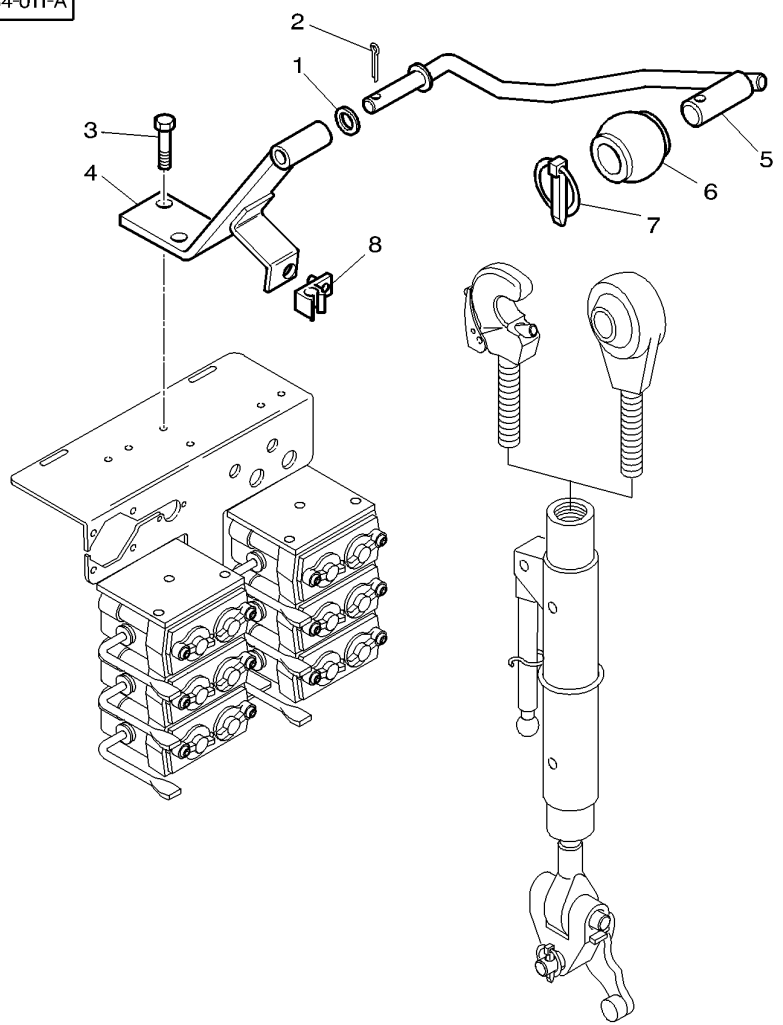

1	339615X1		**1**	WASHER	RONDELLE RONDELLA	SCHEIBE ARANDELA
2	354080X1		**1**	SPLIT PIN	GOUPILLE FENDUE COPIGLIA	SPALTBOLZEN PASADOR HENDIDO
3	339761X1	M8 X 25	**2**	HEX. SOCK. SCREW	VIS TETE HEX VITE PARKER	ZYLINDERSCHRAUBE TORN.CAB.HUECA
4	3789956M1		**1**	SUPPORT	SUPPORT SOPPORTO	TRAGER SOPORTE
5	3789957M2		**1**	SUPPORT	SUPPORT SOPPORTO	TRAGER SOPORTE
6		[A]		TOGGLE	ROTULE ROTULA	GELENKZAPFEN ROTULA
7	**3011024X1**		**1**	PIN	GOUPILLE COPPIGLIA	STIFT PASADOR
8	3798993M1		**1**	CLIP	PATTE D'ATTACHE FERMAGLIO	SCHELLE CLIP

[A] NOT USED
NON UTILISE
NICHT VERWENDET
NON USATO
NO SE USA

Sensing Pin
Capteur D'Effort
Anschluss
Presa
Toma

40-40

1-WQ11-007-C

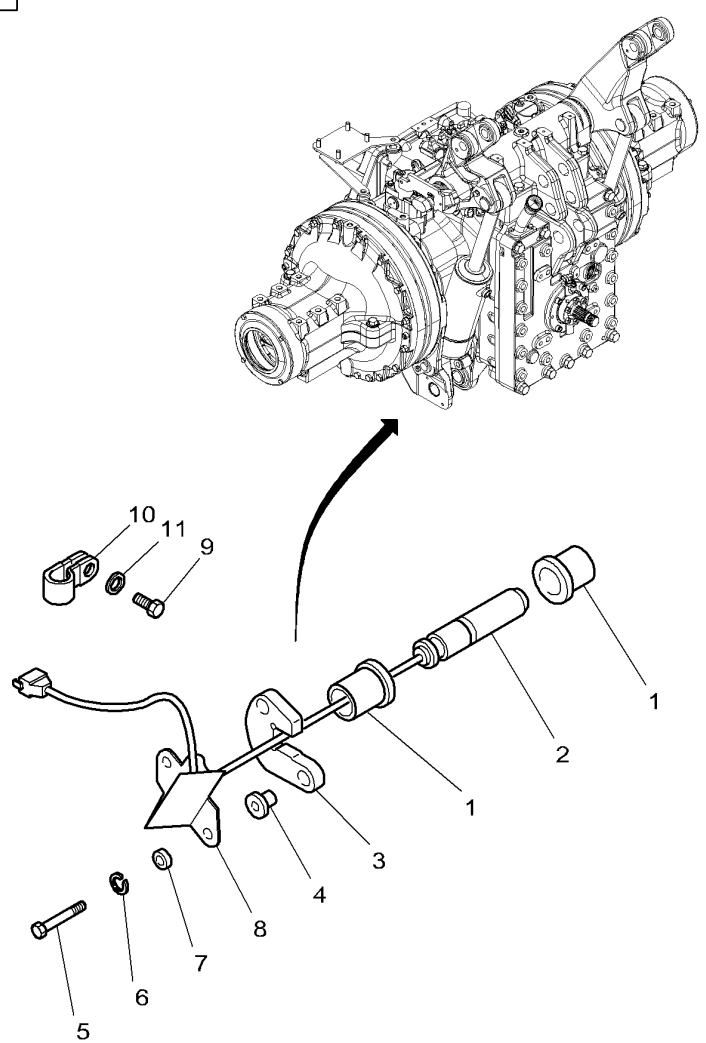

1	903860070010		**4**	BUSH	BAGUE BOCCOLA	RING CASQUILLO
2	**3716981M1**		**2**	INDUCTIVE SENSOR	CAPTEUR INDUCTIF SENSORE INDUTTIV	INDUKT EMPFANGER CAPTADOR INDUCTI
3	816860070011		**2**	LOCKING PLATE	PLAQUE BLOCAGE PIASTRA DI FERMO	SICH.BLECH PLACA DE BLOCAJE
4	199860070010		**4**	BUSH	BAGUE BOCCOLA	RING CASQUILLO
5	339019X1	M10 X 50	**4**	HEX. SOCK. SCREW	VIS TETE HEX VITE PARKER	ZYLINDERSCHRAUBE TORN.CAB.HUECA
6	339376X1		**4**	LOCK WASHER	RONDELLE FREIN RONDELLA ARRESTO	SICHERUNGSRING ARANDELA SEGURID
7	281880010070		**4**	RING	ANNEAU ANELLO	RING. ANILLO
8	816860070030	◀	**1**	PROTECTOR	PROTECTEUR PROTETTORE	SCHUTZ PROTECTOR
8	816860070040	▶	**1**	PROTECTOR	PROTECTEUR PROTETTORE	SCHUTZ PROTECTOR
9	391074X1	➡| P061070 M6 X 12	**2**	HEX. SOCK. SCREW	VIS TETE HEX VITE PARKER	ZYLINDERSCHRAUBE TORN.CAB.HUECA
9*	339560X1	➡ P061071 M6 X 16	**2**	HEX. SOCK. SCREW	VIS TETE HEX VITE PARKER	ZYLINDERSCHRAUBE TORN.CAB.HUECA
10	3389841M1		**2**	CLIP	PATTE D'ATTACHE FERMAGLIO	SCHELLE CLIP
11*	390971X1		**2**	FLAT WASHER	RONDELLE PLATE RONDELLE PIANA	UNTERLEGSCHEIBEN ARANDELA PLANA

Lower Bar With Hook
Barres Inferieures A Crochet
Unterstab Mit Haken
Barra Inferiori Con Gancio
Barras Inferiores Con Gancho

40-45

1-WQ09-007-A

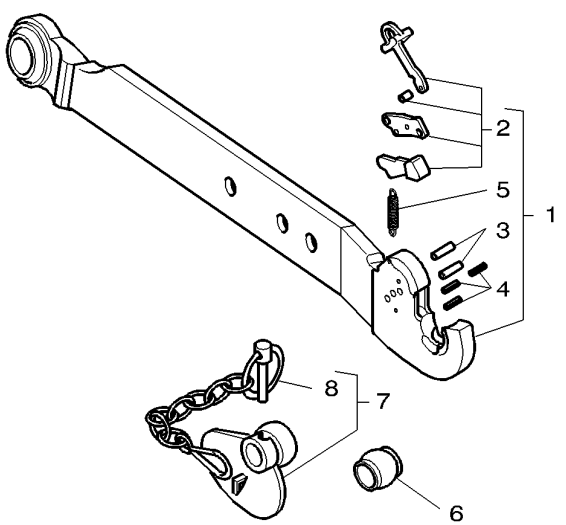

1	3789398M91	▶ CAT 3 ➡| R153045	**1**	BAR	BARRE BARRA	STAB BARRA
1	3789399M91	◀ CAT 3 ➡| R153045	**1**	BAR	BARRE BARRA	STAB BARRA
1*	4273702M91	▶ CAT 3 ➡ R153046		**1**	BAR	BARRE BARRA	STAB BARRA
1*	4273703M91	◀ CAT 3 ➡ R153046		**1**	BAR	BARRE BARRA	STAB BARRA
2	3903954M91	1		**1**	KIT, LEVER	JEU LEVIER KIT LEVETTA	SATZ HEBEL JUEGO, PALANCA
3	3903948M91	1		**1**	KIT, ROLL PINS	JEU GOUP ROULEES KIT PERNI	SATZ SPANNHUELSN JGO.PASAD.ELAST.
4	3903947M91	1		**1**	KIT, ROLL PINS	JEU GOUP ROULEES KIT PERNI	SATZ SPANNHUELSN JGO.PASAD.ELAST.
5*	3788565M1	1		**1**	SPRING	RESSORT MOLLA	FEDER MUELLE
6	**3042430M1**	CAT 2/3		**2**	TOGGLE	ROTULE ROTULA	GELENKZAPFEN ROTULA
6*	**4303395M1**	CAT 3		**2**	TOGGLE	ROTULE ROTULA	GELENKZAPFEN ROTULA
7	**3042427M1**	CAT 2/3		**2**	TOGGLE	ROTULE ROTULA	GELENKZAPFEN ROTULA
7	**3042428M1**	CAT 3		**2**	TOGGLE	ROTULE ROTULA	GELENKZAPFEN ROTULA
8*	F281870062052	7		**1**	FOLDING PLUG	GOUPILLE SEC. FOLDING PLUG	KLAPPSTECKER FOLDING PLUG

Lower Bar With Toogle
Barres Inferieures A Rotule
Unterstab Mit Gelenkzappen
Barra Inferiori Con Rotula
Barras Inferiores Con Perno Enganche

40-50

1-WQ06-005-B

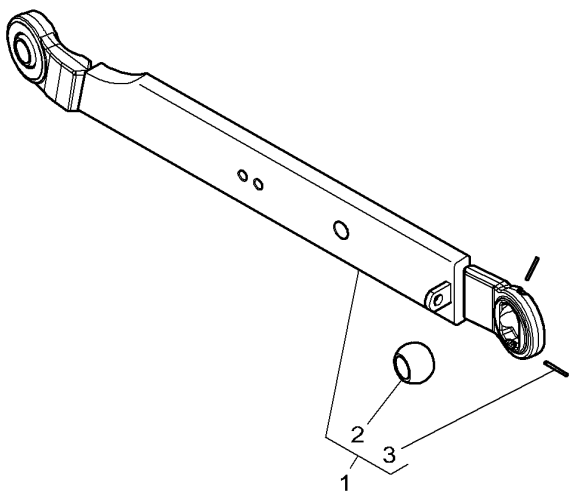

1*	4275847M92	▶ CAT 3	**1** BAR	BARRE BARRA	STAB BARRA
1*	4275848M92	◀ CAT 3	**1** BAR	BARRE BARRA	STAB BARRA
2*	3792609M1	1 ➡ S025016	**1** TOGGLE	ROTULE ROTULA	GELENKZAPFEN ROTULA
3*	391290X1	1 ➡ S025016	**2** PIN	GOUPILLE COPPIGLIA	STIFT PASADOR

Tube Stabilizers
Stabilisateurs A Tube
Stabilisatoren
Stabilizzatore Tubo
Estabilizador Tubo

40-55

1-WQ16-010-A

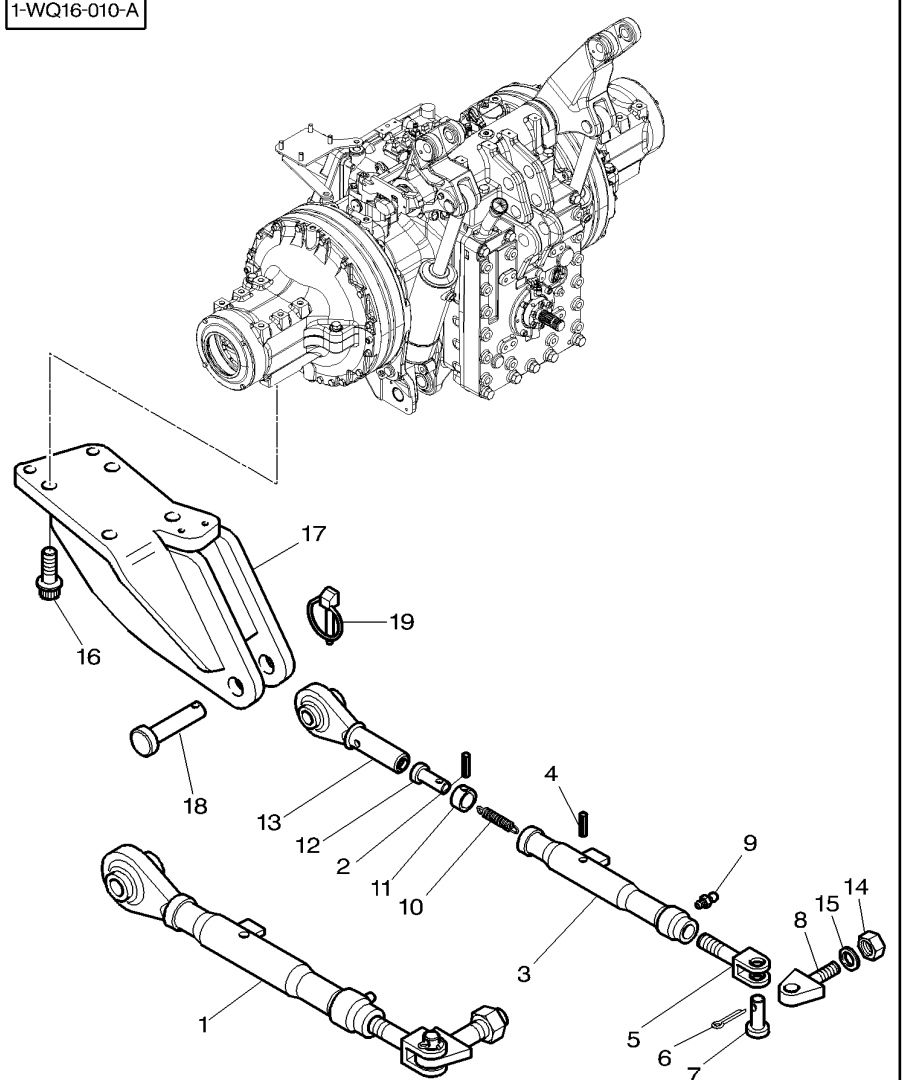

1	4271572M91	◀▶	407/502	**2**	STABILISER	STABILISATEUR STABILIZZATORE	STABILISATOR ESTABILIZADOR
2	391290X1	1	∅ 5 X 30	**1**	PIN	GOUPILLE COPPIGLIA	STIFT PASADOR
3	3794472M91	1		**1**	TUBE	TUBE TUBO.	ROHR TUBO.
4	3819644M1	1	∅ 8 X 50	**1**	SPIROL PIN	GOUPILLE SPIRALE SPINA ESPANSIONE	SPIRALSTIFT PASADOR ESPIRAL
5	3790004M1	1		**1**	CLEVIS	CHAPE GANCIO D'ATTACCO	GABELSTUECK GANCHO SEGURI.
6	391371X1	1	∅ 5 X 40	**1**	SPLIT PIN	GOUPILLE FENDUE COPIGLIA	SPALTBOLZEN PASADOR HENDIDO
7	3019228X1	1		**1**	CLEVIS PIN	AXE PERNO D'ATTACCO	SPLINTBOLZEN BULON CILINDRICO
8	4271109M1	1		**1**	JOURNAL	TENON ZONA APPOGGIO	LAGERZAPFEN GORRON
9	339608X1	1		**1**	GREASE FITTING	GRAISSEUR INGRASSATORE	DRUCKSCHMIERKOPF ENGRASADOR
10	3615711M1	1		**1**	SPRING	RESSORT MOLLA	FEDER MUELLE
11	3615709M1	1		**1**	SLEEVE	MANCHON MANICOTTO	HUELSE MANGUITO
12	3615710M1	1		**1**	CLEVIS PIN	AXE PERNO D'ATTACCO	SPLINTBOLZEN BULON CILINDRICO
13	3794411M91	1		**1**	TOGGLE	ROTULE ROTULA	GELENKZAPFEN ROTULA
14	3010067X1	1		**1**	LOCKNUT	ECROU FREIN AUTOBLOCCANTE	SICHERUNGSMUTTER CONTRATUERCA
15	4271602M1	1		**1**	WASHER	RONDELLE RONDELLA	SCHEIBE ARANDELA
16	3011608X1		M20 X 75	**8**	SCREW	VIS VITE	SCHRAUBE TORNILLO
17	3789400M1	◀		**1**	SUPPORT	SUPPORT SOPPORTO	TRAGER SOPORTE
17	3789401M1	▶		**1**	SUPPORT	SUPPORT SOPPORTO	TRAGER SOPORTE
18	3582043M2			**2**	PIN	GOUPILLE COPPIGLIA	STIFT PASADOR
19	3792034M1			**2**	PIN	GOUPILLE COPPIGLIA	STIFT PASADOR

Shoe Stabilizers
Stabilisateurs A Sabots
Hohenflosseschuh
Stabilizzatore Suola
Estabilizador A Zapata

40-60

1-WQ15-004-B

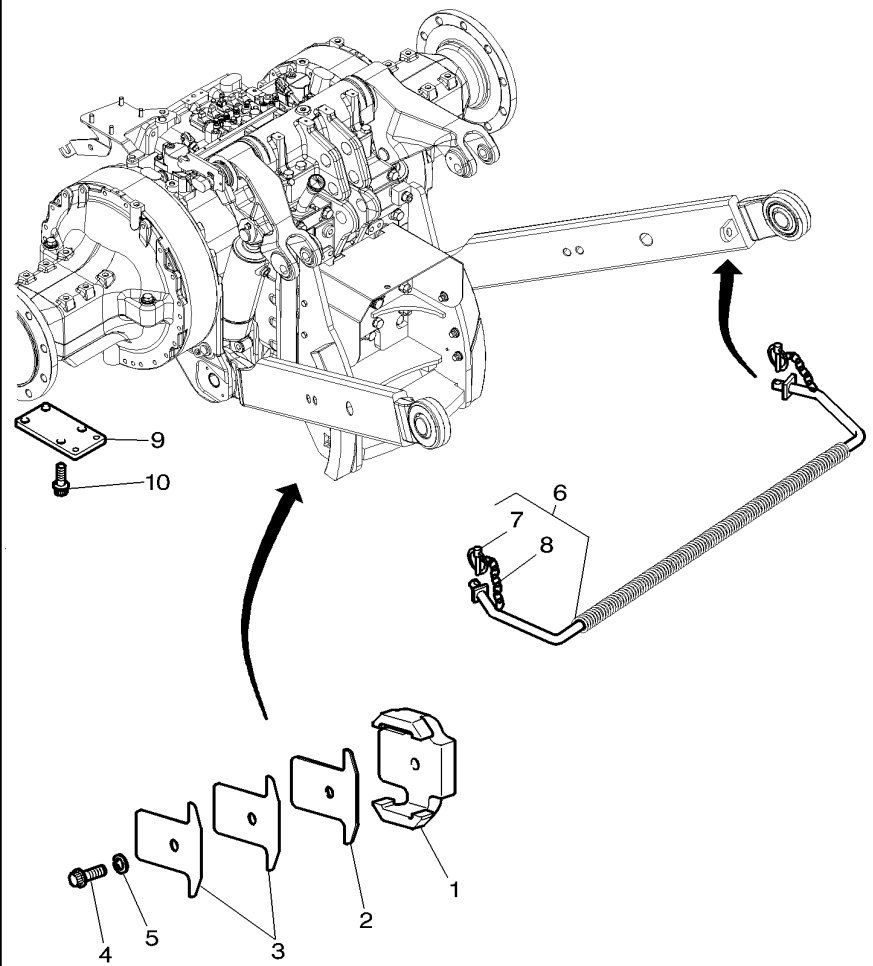

1*	922870040050		**2**	STOP	BUTEE STOP	ANSCHLAG PARO
2	926871040070	⧗ 6MM	**2**	BASE PLATE	PLAQUE DE BASE PIATTO APPOGGIO	GRUNDPLATTE PLATO BASE
3	926871040080	⧗ 2MM	**4**	BASE PLATE	PLAQUE DE BASE PIATTO APPOGGIO	GRUNDPLATTE PLATO BASE
4	3009805X1	M16 X 60	**2**	SCREW METRIC	VIS METRIQUE VITE METRICA	SCHRAUBE METR TORNILLO METRICO
5	339377X1		**2**	LOCK WASHER	RONDELLE FREIN RONDELLA ARRESTO	SICHERUNGSRING ARANDELA SEGURID
6	3792237M1		**1**	SPRING	RESSORT MOLLA	FEDER MUELLE
7	3105774M1	6	**2**	PIN	GOUPILLE COPPIGLIA	STIFT PASADOR
8	3105772M1	6	**2**	RING	ANNEAU ANELLO	RING. ANILLO
9	4279957M1		**2**	SUPPORT	SUPPORT SOPPORTO	TRAGER SOPORTE
10	3011608X1	M20 X 75	**8**	SCREW	VIS VITE	SCHRAUBE TORNILLO

Swinging Drawbar
Barre Oscillante
Zugpendel
Barra Trazione Orientabile
Barra De Tiro Oscilante

40-65

1-WQ12-026-A

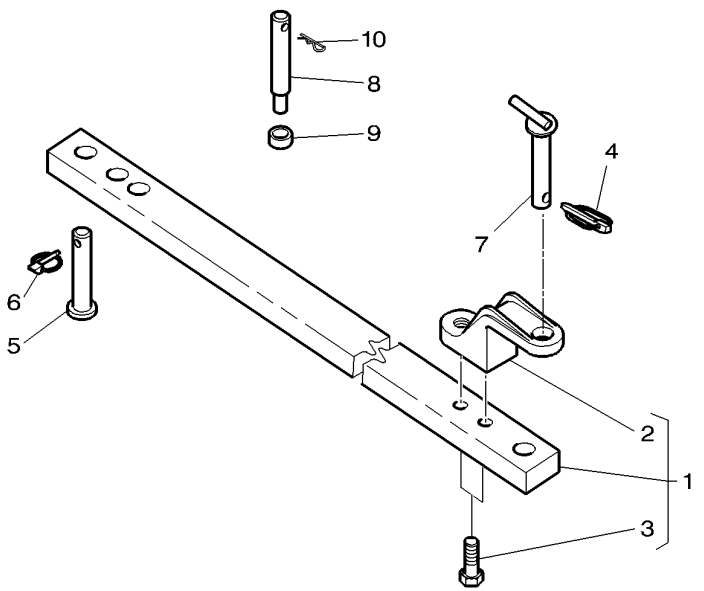

1	4270650M91	50X80X720MM	**1**	BAR	BARRE BARRA	STAB BARRA
2	3793414M1	1	**1**	CLEVIS	CHAPE GANCIO D'ATTACCO	GABELSTUECK GANCHO SEGURI.
3	3011383X1	1 M20 X 80	**2**	HEX. SOCK. SCREW	VIS TETE HEX VITE PARKER	ZYLINDERSCHRAUBE TORN.CAB.HUECA
4	3792034M1		**1**	PIN	GOUPILLE COPPIGLIA	STIFT PASADOR
5	3011338X1	∅ 30MM	**1**	CLEVIS PIN	AXE PERNO D'ATTACCO	SPLINTBOLZEN BULON CILINDRICO
6	3382826M1		**1**	PIN	GOUPILLE COPPIGLIA	STIFT PASADOR
7	**4272346M2**	∅ 30X179MM	**1**	PIN HITCH	BROCHE PERNO ATTACCO	KUPPLUNGSBOLZEN PASADOR ENGAN.
8	4270649M1		**2**	CLEVIS PIN	AXE PERNO D'ATTACCO	SPLINTBOLZEN BULON CILINDRICO
9	4270652M1		**2**	SPACER	ENTRETOISE DISTANZIALE	ABSTANDSTUECK DISCO ESPACIADOR
10	3010334X1		**2**	HAIR PIN	EPINGLE FORCINA	SICHERUNGSFEDER RETENEDOR ELAST

Swinging Drawbar
Barre Oscillante
Zugpendel
Barra Trazione Orientabile
Barra De Tiro Oscilante

40-70

Iso Standard
Norme Iso
Iso Normung
Unificazione Iso
Normalizacion Iso

1-WQ12-028-A

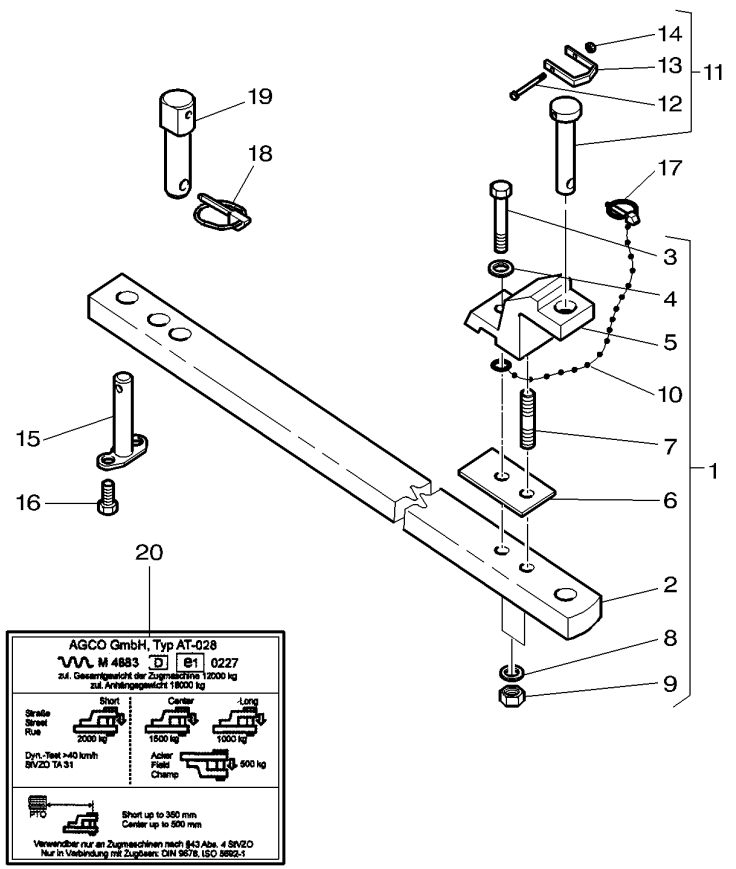

1	G716501120062			**1**	TIE ROD	TRINGLERIE TIRANTE	ZUGSTANGE BRAZO DE ENLACE
2	716501120630	1		**1**	TIE ROD	TRINGLERIE TIRANTE	ZUGSTANGE BRAZO DE ENLACE
3	3581985M1	1	M16X90	**1**	HEX. SOCK. SCREW	VIS TETE HEX VITE PARKER	ZYLINDERSCHRAUBE TORN.CAB.HUECA
4	339377X1	1		**1**	LOCK WASHER	RONDELLE FREIN RONDELLA ARRESTO	SICHERUNGSRING ARANDELA SEGURID
5		1	REF NO 1	**1**	YOKE	CHAPE ARTICULAT FORCELLA.	GELENKGABEL YUGO
6	716501120620	1		**1**	CHOCK	CALE PASSACAVO	UNTERLEG-KEIL CALZA
7	920501120100	1		**1**	STUD	GOUJON SPINOTTO FILETT.	STEHBOLZEN ESPARRAGO ROSCA.
8	1440319X1	1		**1**	WASHER BLISTER	BLISTER RONDELLE BLISTER RONDELLE	SCHEIBENBLISTER AMPOLLA ARANDELA
9	3009746X1	1	M20	**1**	NUT	ECROU DADO	MUTTER TUERCA
10	H716921050030	1		**1**	STRING	FICELLE SPAGO	SEIL BRAMANTE
11	**G916501120050**		∅ 30MM	**1**	CLEVIS PIN	AXE PERNO D'ATTACCO	SPLINTBOLZEN BULON CILINDRICO
12	339132X1	11	M8X75	**1**	HEX. SOCK. SCREW	VIS TETE HEX VITE PARKER	ZYLINDERSCHRAUBE TORN.CAB.HUECA
13	920500120520	11		**1**	STIRRUP	ETRIER STAFFA	BUEGEL FUACION
14	394367X1	11		**1**	NUT	ECROU DADO	MUTTER TUERCA
15	H816500120020			**1**	PLUG.	AXE. PLUG.	ABSTECKTEIL PLUG.
16	3009492X1		M10X25	**2**	HEX. SOCK. SCREW	VIS TETE HEX VITE PARKER	ZYLINDERSCHRAUBE TORN.CAB.HUECA
17	3382826M1			**1**	PIN	GOUPILLE COPPIGLIA	STIFT PASADOR
18	3792034M1			**2**	PIN	GOUPILLE COPPIGLIA	STIFT PASADOR
19	916501120050		◀▶ 100 MM	**2**	PIN	GOUPILLE COPPIGLIA	STIFT PASADOR
20	916501120060			**1**	DECAL	DECALCOMANIE DECALCOMANIA	AUFKLEBER CALCOMANIA

Swinging Drawbar
Barre Oscillante
Zugpendel
Barra Trazione Orientabile
Barra De Tiro Oscilante

40-75

Sae Standard
Norme Sae
Sae Normung
Unificazione Sae
Normalizacion Sae

1-WQ12-030-A

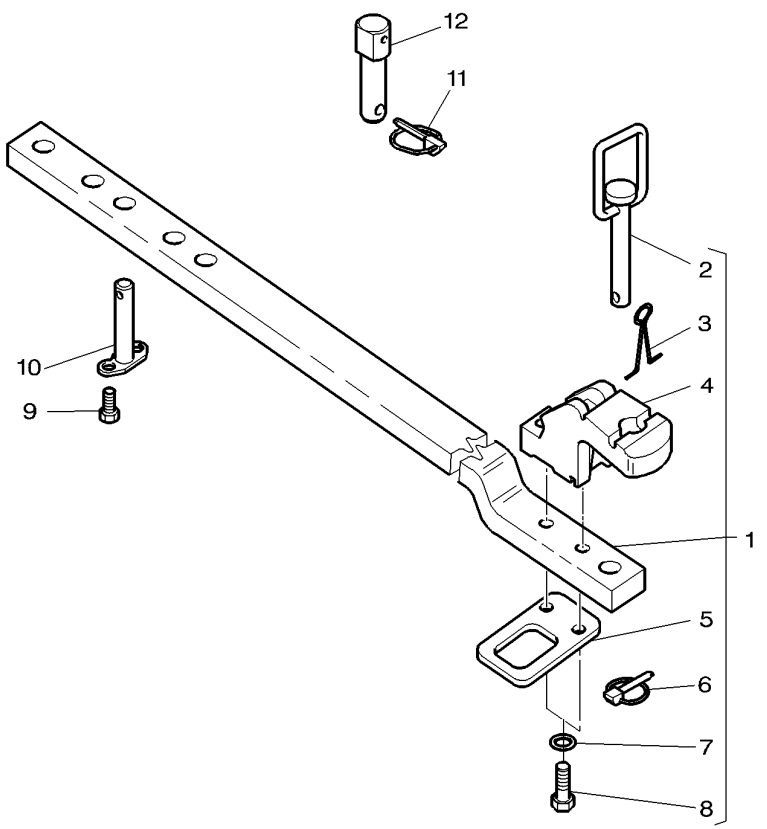

1	4277061M91	→ R151071	**1**	DRAWBAR	BARRE ATTELAGE BARRA DI TRAINO	ZUGPENDEL BARRA D'ENGANCHE
1*	4285308M91	→ R151072	**1**	DRAWBAR	BARRE ATTELAGE BARRA DI TRAINO	ZUGPENDEL BARRA D'ENGANCHE
2	3795142M1	1	**1**	PIN HITCH	BROCHE PERNO ATTACCO	KUPPLUNGSBOLZEN PASADOR ENGAN.
3	3795143M1	1	**1**	SPRING	RESSORT MOLLA	FEDER MUELLE
4	3795141M1	1	**1**	CLEVIS	CHAPE GANCIO D'ATTACCO	GABELSTUECK GANCHO SEGURI.
5	3795530M1	1	**1**	SHACKLE	MANILLE ANELLO TRAZIONE	SCHAEKEL TRABA
6	3581687M1	1	**1**	PIN	GOUPILLE COPPIGLIA	STIFT PASADOR
7	385365X1	1	**2**	WASHER	RONDELLE RONDELLA	SCHEIBE ARANDELA
8	3010945X1	1 M20 X 105 → R151071	**2**	HEX. SOCK. SCREW	VIS TETE HEX VITE PARKER	ZYLINDERSCHRAUBE TORN.CAB.HUECA
8*	3015215X1	1 M20 X 125 → R151072	**2**	HEX. SOCK. SCREW	VIS TETE HEX VITE PARKER	ZYLINDERSCHRAUBE TORN.CAB.HUECA
9	3009492X1	M10 X 25	**2**	HEX. SOCK. SCREW	VIS TETE HEX VITE PARKER	ZYLINDERSCHRAUBE TORN.CAB.HUECA
10	H816500120020		**1**	PLUG.	AXE. PLUG.	ABSTECKTEIL PLUG.
11	3792034M1		**2**	PIN	GOUPILLE COPPIGLIA	STIFT PASADOR
12	716501120030	→ R151071	**2**	PIN	GOUPILLE COPPIGLIA	STIFT PASADOR
12*	916501120050	→ R151072	**2**	PIN	GOUPILLE COPPIGLIA	STIFT PASADOR

Swinging Drawbar Support
Support De Barre Oscillante
Zugstangestuetze
Support De Barra Oscillante
Support De Barra De Tiro

40-80

PLANCHES EN COURS D'ILLUSTRATION

1	H920500120100	➡	R151071	**1**	FULCRUM	POINT D APPUI FULCRO	STUETZBOCK PUNTO DE GIRO
1*	H920501121130		➡ R151072	**1**	FULCRUM	POINT D APPUI FULCRO	STUETZBOCK PUNTO DE GIRO
2	X505585617000			**2**	DOWEL	PLOT SPINA	ZYLINDERSTIFT CENTRAJE
3	3011546X1	M18 X 135		**6**	STUD	GOUJON SPINOTTO FILETT.	STEHBOLZEN ESPARRAGO ROSCA.
4	3011545X1	M18 X 110		**2**	HEX. SOCK. SCREW	VIS TETE HEX VITE PARKER	ZYLINDERSCHRAUBE TORN.CAB.HUECA
5	X505559459000	➡	R151071	**2**	DOWEL	PLOT SPINA	ZYLINDERSTIFT CENTRAJE
6	3011390X1			**6**	NUT	ECROU DADO	MUTTER TUERCA
7*	922870040020	▶ ▲		**1**	SKID	SABOT DE ROUE ZOCCOLO	GLEITKUFE TABLON
7*	922870040010	◀ ▲		**1**	SKID	SABOT DE ROUE ZOCCOLO	GLEITKUFE TABLON
8*	922870040040	▶ ▼		**1**	SKID	SABOT DE ROUE ZOCCOLO	GLEITKUFE TABLON
8*	922870040030	◀ ▼		**1**	SKID	SABOT DE ROUE ZOCCOLO	GLEITKUFE TABLON
9	926871040060	➡	30-MAR-2007	**2**	PLATE	PLAQUE PIASTRA	PLATTE PLATO
10	3011538X1	M18 X 50		**4**	HEX. SOCK. SCREW	VIS TETE HEX VITE PARKER	ZYLINDERSCHRAUBE TORN.CAB.HUECA
11	3384131M1	M16 X 55		**4**	HEX. SOCK. SCREW	VIS TETE HEX VITE PARKER	ZYLINDERSCHRAUBE TORN.CAB.HUECA
11	3010885X1	M16 X 45		**4**	HEX. SOCK. SCREW	VIS TETE HEX VITE PARKER	ZYLINDERSCHRAUBE TORN.CAB.HUECA
12	H920501120110	➡	R151071	**1**	FRAME	BATI TELAIO	RAHMEN BASTIDOR
12*	H920501121140		➡ R151072	**1**	FRAME	BATI TELAIO	RAHMEN BASTIDOR
13	339337X1	M8 X 30		**4**	HEX. SOCK. SCREW	VIS TETE HEX VITE PARKER	ZYLINDERSCHRAUBE TORN.CAB.HUECA
14	3011194X1	M20 X 150 ➡	R151071	**6**	SCREW	VIS VITE	SCHRAUBE TORNILLO
14*	3010435X1	M20 X 165 |➡ R151072 ➡| 22-MAR-2007	**6**	HEX. SOCK. SCREW	VIS TETE HEX VITE PARKER	ZYLINDERSCHRAUBE TORN.CAB.HUECA
14*	3011970X1	M20 X 160 	➡ 23-MAR-2007	**6**	SCREW	VIS VITE	SCHRAUBE TORNILLO
15*	3010793X1		**6**	WASHER	RONDELLE RONDELLA	SCHEIBE ARANDELA

Swinging Drawbar Support
Support De Barre Oscillante
Zugstangestuetze
Support De Barra Oscillante
Support De Barra De Tiro

40-85

1-WQ36-025-A

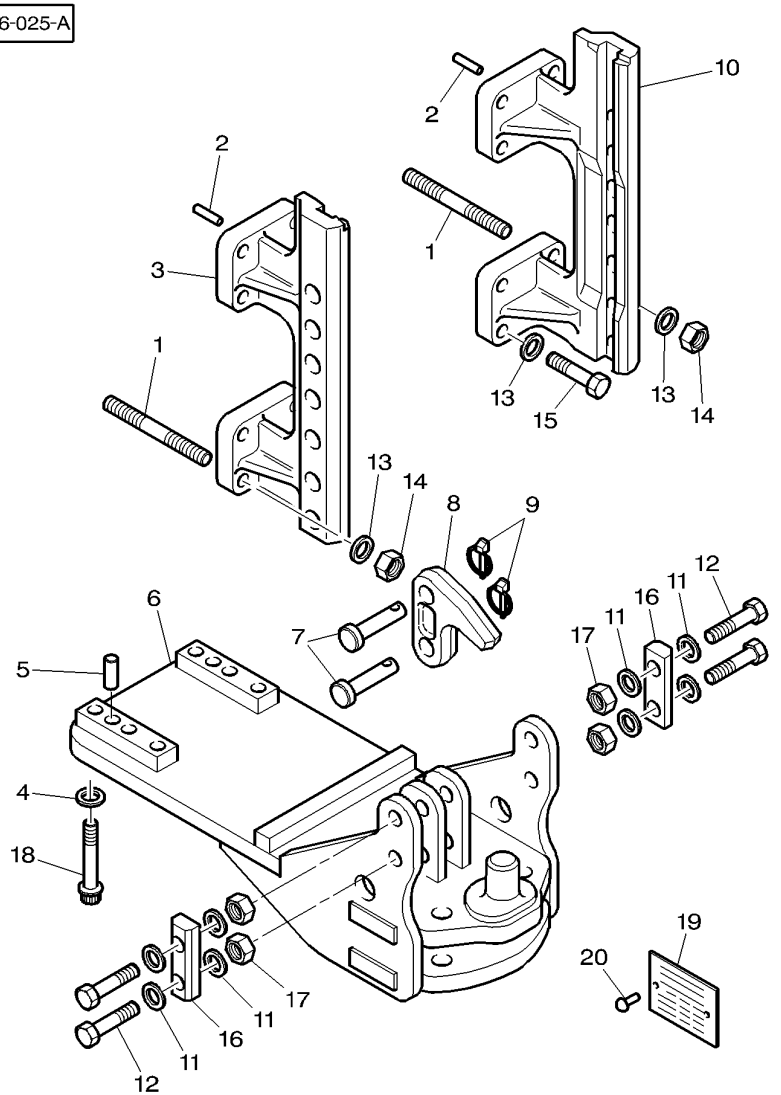

1	3011546X1	M18 X 135	**8**	STUD	GOUJON SPINOTTO FILETT.	STEHBOLZEN ESPARRAGO ROSCA.
2	X505559459000		**4**	DOWEL	PLOT SPINA	ZYLINDERSTIFT CENTRAJE
3	816500060041	◀	**1**	SLIDE RAIL	RAIL GLISSEMENT RINGHIERA	GLEITSCHIENE CARRIL TENSOR
4	385365X1		**6**	WASHER	RONDELLE RONDELLA	SCHEIBE ARANDELA
5	X505585617000		**2**	DOWEL	PLOT SPINA	ZYLINDERSTIFT CENTRAJE
6	4271570M92		**1**	SUPPORT	SUPPORT SOPPORTO	TRAGER SOPORTE
7	3797361M1		**2**	CLEVIS PIN	AXE PERNO D'ATTACCO	SPLINTBOLZEN BULON CILINDRICO
8	3797125M1		**1**	HOOK	CROCHET GANCIO	HAKEN GANCHO
9	3382824M1		**2**	PIN	GOUPILLE COPPIGLIA	STIFT PASADOR
10	816500060051	▶	**1**	SLIDE RAIL	RAIL GLISSEMENT RINGHIERA	GLEITSCHIENE CARRIL TENSOR
11	3010505X1		**8**	WASHER	RONDELLE RONDELLA	SCHEIBE ARANDELA
12	3580796M1	M22 X 100	**4**	HEX. SOCK. SCREW	VIS TETE HEX VITE PARKER	ZYLINDERSCHRAUBE TORN.CAB.HUECA
13	339648X1		**16**	LOCK WASHER	RONDELLE FREIN RONDELLA ARRESTO	SICHERUNGSRING ARANDELA SEGURID
14	3011390X1		**8**	NUT	ECROU DADO	MUTTER TUERCA
15	3011517X1	M18 X 55	**8**	HEX. SOCK. SCREW	VIS TETE HEX VITE PARKER	ZYLINDERSCHRAUBE TORN.CAB.HUECA
16	4271601M1		**2**	THRUSTER	ARRETOIR SPINGITORE	DRUCKRING PROPULSOR
17	3581642M1		**4**	NUT	ECROU DADO	MUTTER TUERCA
18	3010563X1	M20 X 90	**6**	SCREW	VIS VITE	SCHRAUBE TORNILLO
19	816500060090		**1**	IDENTITY PLATE	PLAQUE DE TYPE PIASTRA IDENTIF.	TYPENSCHILD PLACA IDENTIF.
20	X419432887000		**2**	NAIL, NOTCHED	CLOU CRANTE CHIODO	KERBNAGEL GARRA DENTADA

Swinging Drawbar Support
Support De Barre Oscillante
Zugstangestuetze
Support De Barra Oscillante
Support De Barra De Tiro

40-90

Mt 665b - With Long Hay Ladder
Mt 665b - Avec Echelle Longue
Mt 665b - Mit Longladegatter
Mt 665b - Con Lunga Guida Scala
Mt 665b - Con Longituda Guia Scala

1-WQ36-027-A

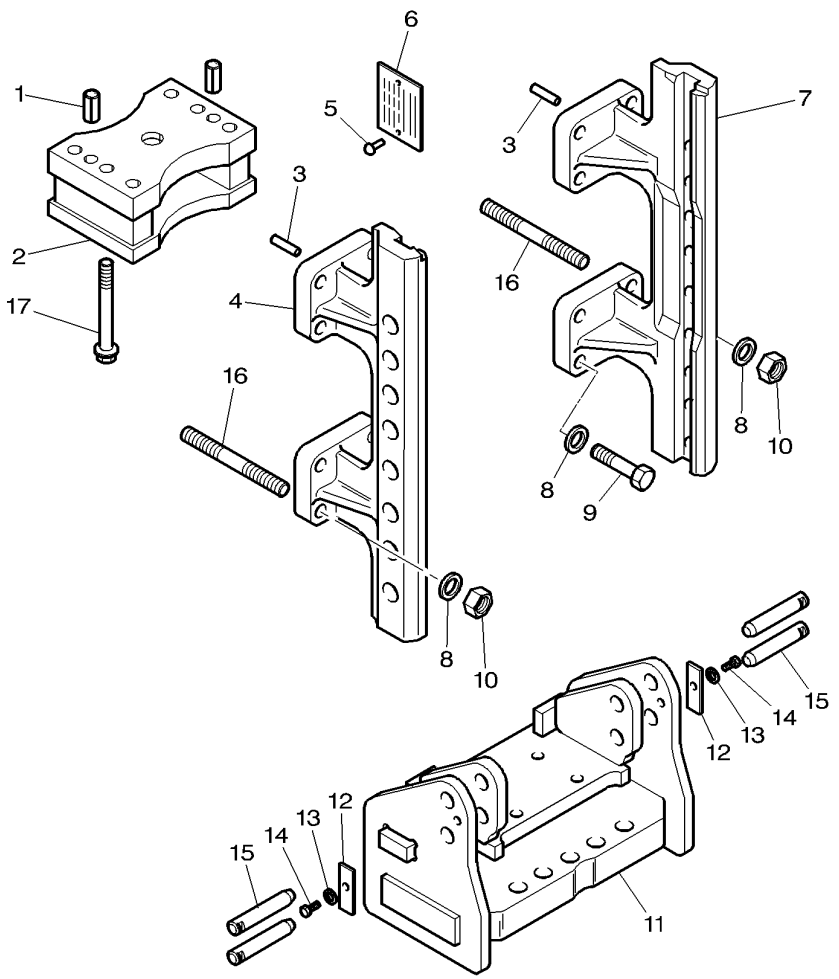

1	X505585617000		**2**	DOWEL	PLOT SPINA	ZYLINDERSTIFT CENTRAJE
2	H920500120100		**1**	FULCRUM	POINT D APPUI FULCRO	STUETZBOCK PUNTO DE GIRO
3	X505559459000		**4**	DOWEL	PLOT SPINA	ZYLINDERSTIFT CENTRAJE
4	816500060012	◀	**1**	SLIDE RAIL	RAIL GLISSEMENT RINGHIERA	GLEITSCHIENE CARRIL TENSOR
5	X419432887000		**2**	NAIL, NOTCHED	CLOU CRANTE CHIODO	KERBNAGEL GARRA DENTADA
6	816500060090		**1**	IDENTITY PLATE	PLAQUE DE TYPE PIASTRA IDENTIF.	TYPENSCHILD PLACA IDENTIF.
7	816500060022	▶	**1**	SLIDE RAIL	RAIL GLISSEMENT RINGHIERA	GLEITSCHIENE CARRIL TENSOR
8*		[A]	**X**	WASHER	RONDELLE RONDELLA	SCHEIBE ARANDELA
9	3011517X1	M18 X 55	**8**	HEX. SOCK. SCREW	VIS TETE HEX VITE PARKER	ZYLINDERSCHRAUBE TORN.CAB.HUECA
10	3011390X1		**8**	NUT	ECROU DADO	MUTTER TUERCA
11	H916501120102		**1**	FRAME	BATI TELAIO	RAHMEN BASTIDOR
12	716501120200		**2**	LOCKING PLATE	PLAQUE BLOCAGE PIASTRA DI FERMO	SICH.BLECH PLACA DE BLOCAJE
13	339374X1		**2**	LOCK WASHER	RONDELLE FREIN RONDELLA ARRESTO	SICHERUNGSRING ARANDELA SEGURID
14	339123X1	M8 X 20	**2**	HEX. SOCK. SCREW	VIS TETE HEX VITE PARKER	ZYLINDERSCHRAUBE TORN.CAB.HUECA
15	916501120030		**2**	PIN	GOUPILLE COPPIGLIA	STIFT PASADOR
16	3011546X1	M18 X 135	**8**	STUD	GOUJON SPINOTTO FILETT.	STEHBOLZEN ESPARRAGO ROSCA.
17	3011194X1	M20 X 150	**6**	SCREW	VIS VITE	SCHRAUBE TORNILLO

[A] NOT USED
NON UTILISE
NICHT VERWENDET
NON USATO
NO SE USA

Hitch
Crochet D'Attelage
Anhaengekupplung
Attacco
Enganche

40-95

(D)

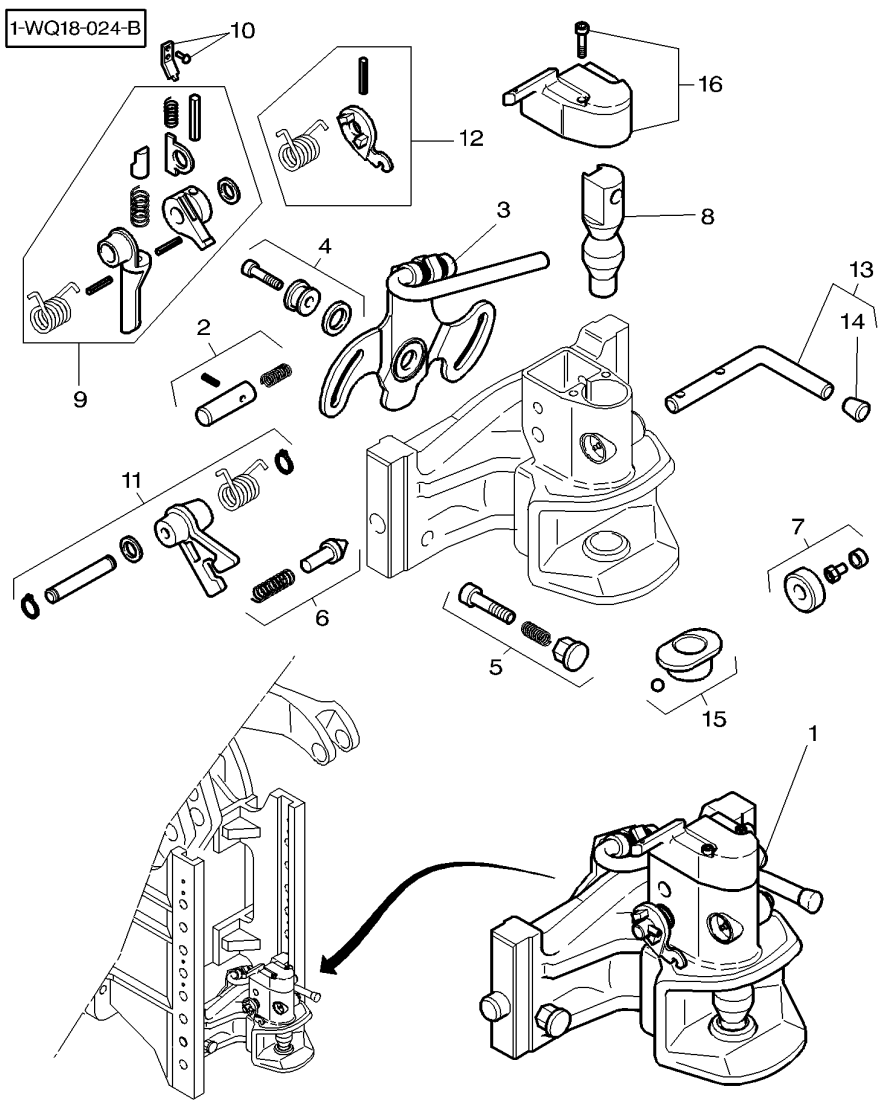

1	G816500072040		**1**	HITCH	ATTELAGE ATTACCO	ANHAENGEKUPPLUNG ENGANCHE
2	F816500070140	1	**1**	PIN	GOUPILLE COPPIGLIA	STIFT PASADOR
3	F816500070130	1	**1**	DISC	DISQUE DISCO	SCHEIBE DISCO
4	F816500070150	1	**1**	KIT, ATTACHING.	KIT ACCESSOIRE KIT ATTACCO	ANBAUSATZ JGO.DE FIJACION
5	F816500070120	1	**1**	SECURING PIECE	PIECE SECURITE SECURING PIECE	SICHERUNGSTEIL SECURING PIECE
6	F816500070180	1	**1**	PEG	PORTE MANTEAU PICCHETTO	STIFT. CLAVIJA
7	F816500070020	1	**1**	COVER	COUVERCLE COPERCHIO	ABDECKUNG. CUBIERTA
8	F816500070160	1	**1**	PIN HITCH	BROCHE PERNO ATTACCO	KUPPLUNGSBOLZEN PASADOR ENGAN.
9	F816500070030	1	**1**	LEVER	LEVIER LEVA	HEBEL PALANCA
10	F816500070100	1	**1**	SPRING CARRIER	SUPPORT RESSORT PORTA MOLLA	FEDERTRAEGER SOPORTE DE MUELL
11	F816500070170	1	**1**	LEVER	LEVIER LEVA	HEBEL PALANCA
12	F816500070040	1	**1**	LEVER	LEVIER LEVA	HEBEL PALANCA
13	F816500070070	1	**1**	HAND LEVER	MANETTE LEVA A MANO	HANDHEBEL PALANCA DE MANO
14	F284501061110	13	**1**	HANDLE	MANCHE IMPUGNATURA	GRIFF EMPUNADURA
15	F816500070190	1	**1**	BUSH	BAGUE BOCCOLA	RING CASQUILLO
16	F816500070060	1	**1**	COVER	COUVERCLE COPERCHIO	ABDECKUNG. CUBIERTA

Front Linkage	Hydraulic
Attelage Avant	Hydraulique
Frontkraftheber	Hydraulik
Attacco Anteriore	Idraulico
Enganche Delantero	Hydraulico

40-100

1-WQ39-018-C

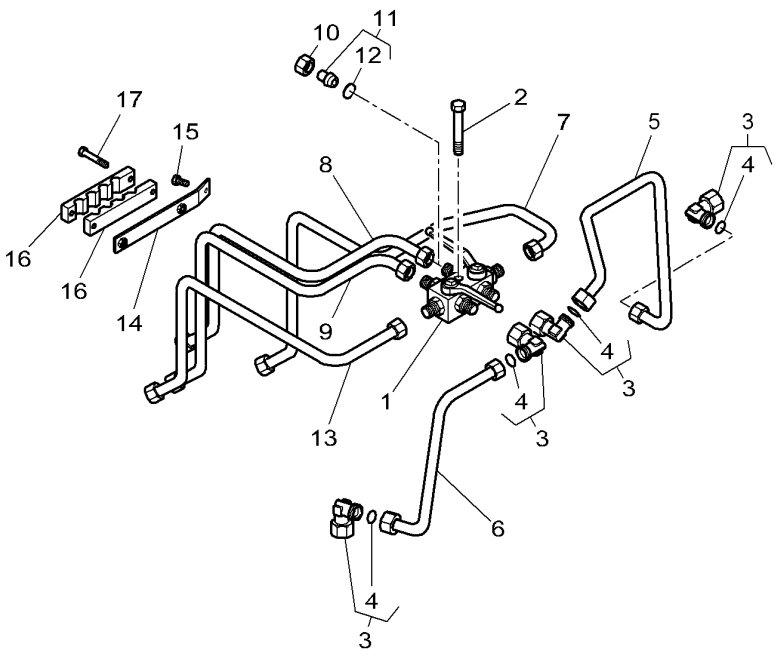

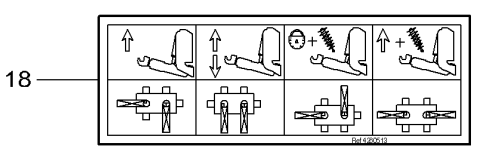

1	4275566M1			**1**	VANE	VANNE ALETTA	LEITFLUEGEL ALETTA
2	1441967X1	M6 X 45		**2**	SCREW METRIC	VIS METRIQUE VITE METRICA	SCHRAUBE METR TORNILLO METRICO
3*	3011085X91	M22		**4**	UNION	RACCORD RACCORDO	VERSCHRAUBUNG RACOR
4	3011147X1	3		**1**	O RING	JOINT TORIQUE GIUNTO DI TENUTA	O-RING JUNTA TOROIDAL
5	4278478M1			**1**	TUBE	TUBE TUBO.	ROHR TUBO.
6	4276168M1			**1**	TUBE	TUBE TUBO.	ROHR TUBO.
7	4277427M1			**1**	TUBE	TUBE TUBO.	ROHR TUBO.
8	4278477M1	[A]		**1**	TUBE	TUBE TUBO.	ROHR TUBO.
9	4278476M1			**1**	TUBE	TUBE TUBO.	ROHR TUBO.
10	3011119X1	[B]		**1**	NUT	ECROU DADO	MUTTER TUERCA
11	3011136X91	[B]		**1**	TAP	OBTURATEUR. TAPPO*	HAHN GRIFO
12	3011147X1	11	[B]	**1**	O RING	JOINT TORIQUE GIUNTO DI TENUTA	O-RING JUNTA TOROIDAL
13	4277426M1			**1**	TUBE	TUBE TUBO.	ROHR TUBO.
14	4278481M1			**1**	SUPPORT	SUPPORT SOPPORTO	TRAGER SOPORTE
15	339228X1	M8 X 12		**1**	HEX. SOCK. SCREW	VIS TETE HEX VITE PARKER	ZYLINDERSCHRAUBE TORN.CAB.HUECA
16	4275693M2			**2**	BRIDLE	BRIDE BRIGLIA	LASCHENSPANNBAND BRIDA
17	339229X1	M6 X 40		**2**	HEX. SOCK. SCREW	VIS TETE HEX VITE PARKER	ZYLINDERSCHRAUBE TORN.CAB.HUECA
18	4280513M1			**1**	DECAL	DECALCOMANIE DECALCOMANIA	AUFKLEBER CALCOMANIA

[A] WITH ACCUMULATOR
AVEC ACCUMULATEUR
MIT AKKUMULATOR
CON ACCUMULATORE
CON ACUMULADOR

[B] WITHOUT ACCUMULATOR
SANS ACCUMULATEUR
OHNE AKKUMULATOR
SENZA ACCUMULATORE
SIN ACUMULADOR

Front Linkage	Hydraulic
Attelage Avant	Hydraulique
Frontkraftheber	Hydraulik
Attacco Anteriore	Idraulico
Enganche Delantero	Hydraulico

40-105

Accumulator
Accumulateur
Akkumulator
Accumulatore
Acumulador

1-WQ39-019-A

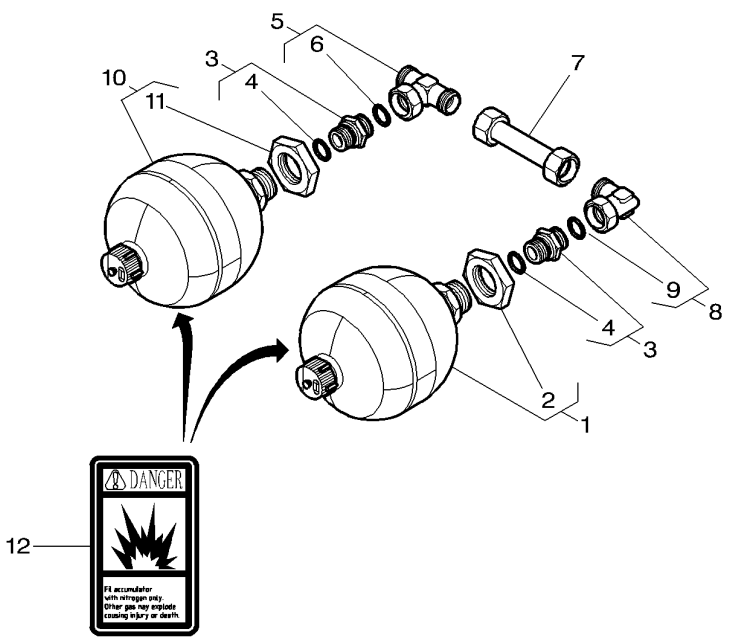

1	4276645M1	[A] 44 Bars	**1**	ACCUMULATOR	ACCUMULATEUR ACCUMULATORE	AKKUMULATOR ACUMULADOR
2	3907430M1	1	**1**	NUT	ECROU DADO	MUTTER TUERCA
3	3011548X91		**2**	UNION	RACCORD RACCORDO	VERSCHRAUBUNG RACOR
4	3011154X1	3	**1**	GASKET	JOINT GIUNTO PIANO	FLACHDICHTUNG JUNTA PLANA
5	3011093X91	M22	**1**	UNION	RACCORD RACCORDO	VERSCHRAUBUNG RACOR
6	3011147X1	5	**1**	O RING	JOINT TORIQUE GIUNTO DI TENUTA	O-RING JUNTA TOROIDAL
7	4277428M2		**1**	TUBE	TUBE TUBO.	ROHR TUBO.
8	3011085X91		**1**	UNION	RACCORD RACCORDO	VERSCHRAUBUNG RACOR
9	3011147X1	8	**1**	O RING	JOINT TORIQUE GIUNTO DI TENUTA	O-RING JUNTA TOROIDAL
10	4278484M1	[A] 17 Bars	**1**	ACCUMULATOR	ACCUMULATEUR ACCUMULATORE	AKKUMULATOR ACUMULADOR
11	3907430M1	10	**1**	NUT	ECROU DADO	MUTTER TUERCA
12	3777021M3		**1**	DECAL	DECALCOMANIE DECALCOMANIA	AUFKLEBER CALCOMANIA

[A] THE APPROPRIATE SAFETY DECALS MUST BE ORDERED AND FITTED TO THIS PART
CETTE PIECE DOIT ETRE IMPERATIVEMENT COMMANDEE AVEC SA DECALCOMANIE DE SECURITE
DIESES TEIL MUSS UNBEDINGT ZUSAMMEN MIT DEM SICHER HEITSHINWEISSCHILD BESTELLT WERDEN
QUESTA PARTE DEVE ESSERE IMPERATIVAMENTO COMANDATA CON LA SUA DECALCOMANIA SICUREZZA
ESTA PARTE DEBE ENCARGARSE IMPERATIVAMENTE CON SU CALCOMANIA DE SEGURIDAD

Front Linkage	**Hydraulic**	**With Front Linkage 50000n**
Attelage Avant	**Hydraulique**	**Avec Attelage Avant 50000n**
Frontkraftheber	**Hydraulik**	**Mit Vordere Kupplung 50000n**
Attacco Anteriore	**Idraulico**	**Con Attacco Anteriore 50000n**
Enganche Delantero	**Hydraulico**	**Con Enganche Delantero 50000n**

40-110

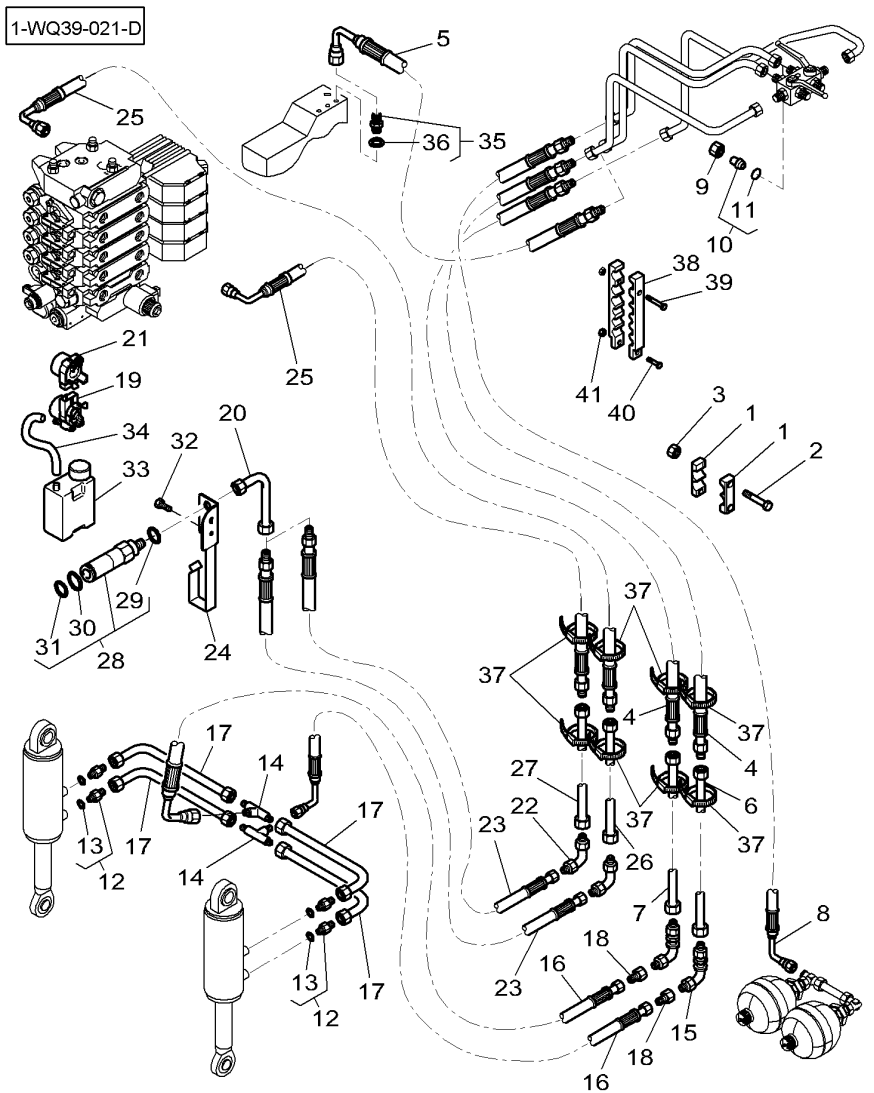

1	3786069M1	➡	R321048	**2**	BRIDLE	BRIDE BRIGLIA	LASCHENSPANNBAND BRIDA
2	339229X1	M6 X 40 ➡	R321048	**2**	HEX. SOCK. SCREW	VIS TETE HEX VITE PARKER	ZYLINDERSCHRAUBE TORN.CAB.HUECA
3	1441500X1	M6 ➡	R321048	**2**	TOP LOCKNUT	ECROU AUTOFREINE DADO DI TESTA	SELBSTS.MUTTER CONTRATUERCA SUP
4	4276161M2	◀▶ 1450 MM	**2**	HYDR. HOSE	FLEXIBLE TUBOFLEX IDRAUL	HYDR. SCHLAUCH TUBO HIDRAULICO
5*	4278482M2	◀▶ 1430 MM	**1**	HYDR. HOSE	FLEXIBLE TUBOFLEX IDRAUL	HYDR. SCHLAUCH TUBO HIDRAULICO
6	4276747M3		**1**	TUBE	TUBE TUBO.	ROHR TUBO.
7	4276746M3		**1**	TUBE	TUBE TUBO.	ROHR TUBO.
8*	4278475M3	[A] ◀▶ 1090 MM	**1**	HYDR. HOSE	FLEXIBLE TUBOFLEX IDRAUL	HYDR. SCHLAUCH TUBO HIDRAULICO
9	3011119X1	[B]	**1**	NUT	ECROU DADO	MUTTER TUERCA
10	3011136X91	[B]	**1**	TAP	OBTURATEUR. TAPPO*	HAHN GRIFO
11	3011147X1	10 [B]	**1**	O RING	JOINT TORIQUE GIUNTO DI TENUTA	O-RING JUNTA TOROIDAL
12	3011223X91		**4**	UNION	RACCORD RACCORDO	VERSCHRAUBUNG RACOR
13	338923X1	12	**1**	GASKET	JOINT GIUNTO PIANO	FLACHDICHTUNG JUNTA PLANA
14	338737X1		**2**	UNION	RACCORD RACCORDO	VERSCHRAUBUNG RACOR
15	3011065X1		**2**	UNION	RACCORD RACCORDO	VERSCHRAUBUNG RACOR
16	4278100M1	◀▶ 480 MM	**2**	HYDR. HOSE	FLEXIBLE TUBOFLEX IDRAUL	HYDR. SCHLAUCH TUBO HIDRAULICO
17	4279253M1		**4**	TUBE	TUBE TUBO.	ROHR TUBO.
18	3011071X91		**2**	UNION	RACCORD RACCORDO	VERSCHRAUBUNG RACOR
19	4278348M1	[C]	**1**	BREATHER	RENIFLARD SFIATATOIO	ENTLUEFTER RESPIRADERO
20	4279248M1	[C]	**2**	TUBE	TUBE TUBO.	ROHR TUBO.
21	4278347M1	[C]	**1**	BREATHER	RENIFLARD SFIATATOIO	ENTLUEFTER RESPIRADERO
22	3011065X1	[C]	**2**	UNION	RACCORD RACCORDO	VERSCHRAUBUNG RACOR
23	4279250M1	[C] ◀▶ 580 MM	**2**	HYDR. HOSE	FLEXIBLE TUBOFLEX IDRAUL	HYDR. SCHLAUCH TUBO HIDRAULICO
24	4278318M2	[C]	**1**	STRAP	PATTE CORREGGIA	LASCHE FAJA
25	4276160M2	[C] ◀▶ 1700 MM ➡	R321048	**2**	HYDR. HOSE	FLEXIBLE TUBOFLEX IDRAUL	HYDR. SCHLAUCH TUBO HIDRAULICO

Front Linkage	Hydraulic
Attelage Avant	Hydraulique
Frontkraftheber	Hydraulik
Attacco Anteriore	Idraulico
Enganche Delantero	Hydraulico

40-110

With Front Linkage 50000n
Avec Attelage Avant 50000n
Mit Vordere Kupplung 50000n
Con Attacco Anteriore 50000n
Con Enganche Delantero 50000n

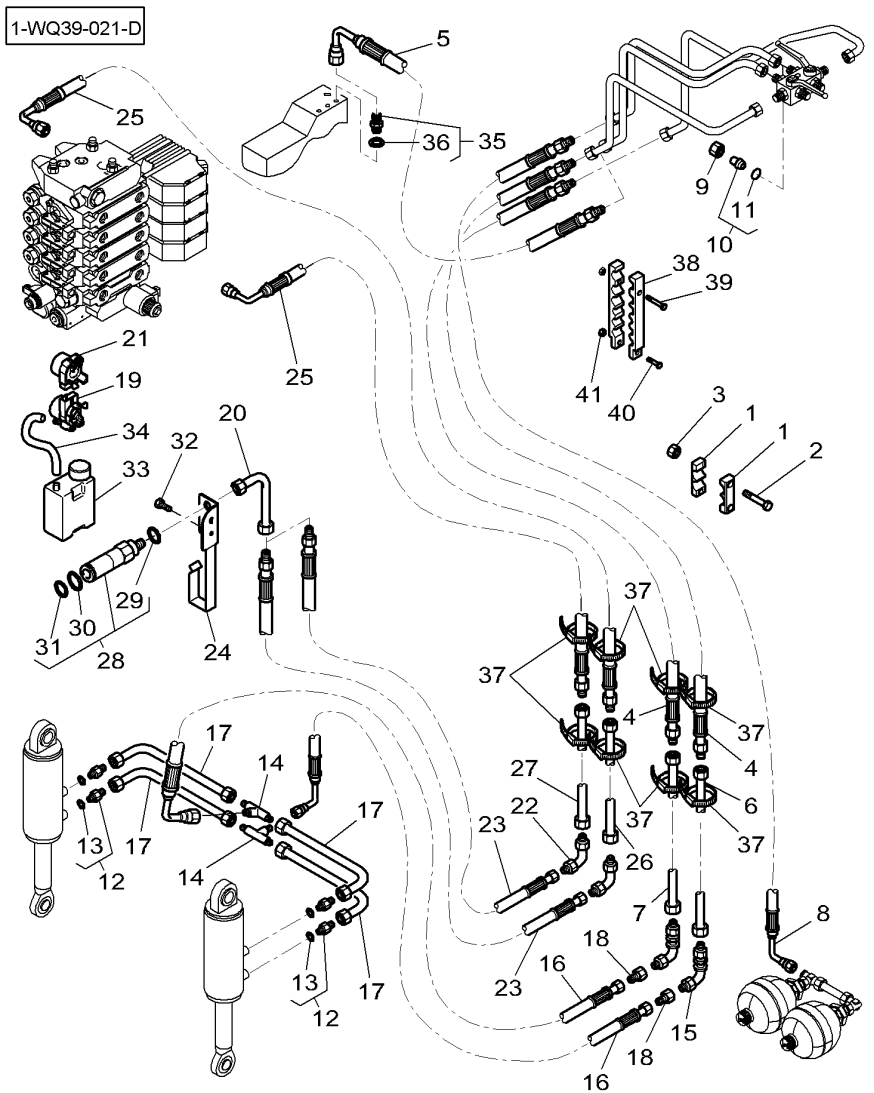

25*	4276160M2		[CI] ◀▶ 1700 MM ➡ R321049	**1**	HYDR. HOSE	FLEXIBLE TUBOFLEX IDRAUL	HYDR. SCHLAUCH TUBO HIDRAULICO
25*	4286540M1		[CI] ◀▶ 1650 MM ➡ R321049	**1**	HYDR. HOSE	FLEXIBLE TUBOFLEX IDRAUL	HYDR. SCHLAUCH TUBO HIDRAULICO
26	4276749M3		[C]	**1**	TUBE	TUBE TUBO.	ROHR TUBO.
27	4276748M3		[C]	**1**	TUBE	TUBE TUBO.	ROHR TUBO.
28	**3785907M2**		[C]	**2**	FEMALE COUPLER	COUPLEUR FEMELLE GIUNTO FEMMINA	KUPPLST.AUSSEN ACOPLADOR HEMBRA
29	3903520M1	28	[C]	**1**	GASKET	JOINT GIUNTO PIANO	FLACHDICHTUNG JUNTA PLANA
30	3903512M2	28	[C]	**1**	SNAPRING	SEGMENT ARRET ANELLO SIEGER	SPRENGRING ANILLA RETENCION
31	368374X1	28	[C]	**1**	O RING	JOINT TORIQUE GIUNTO DI TENUTA	O-RING JUNTA TOROIDAL
32	339761X1		[C] M8 X 25	**2**	HEX. SOCK. SCREW	VIS TETE HEX VITE PARKER	ZYLINDERSCHRAUBE TORN.CAB.HUECA
33*	4284633M1		[C]	**1**	CAN	BIDON BIDONE	KANNE BIDON
34	4279254M1		[C] ◀▶ 100 MM	**1**	HYDR. HOSE	FLEXIBLE TUBOFLEX IDRAUL	HYDR. SCHLAUCH TUBO HIDRAULICO
35	338717X91			**1**	UNION	RACCORD RACCORDO	VERSCHRAUBUNG RACOR
36	338764X1	35		**1**	SEAL	JOINT ETANCHEITE GIUNTO ROTONDO	DICHTRING JUNTA REDONDA
37	4279275M1		[E] ◀▶ 180 MM	**2**	CABLE TIE	ATTACHE CABLE FASCETTA CAVI	KABELBINDER APRIETACABLES
37	4279273M1		[F]	**2**	CABLE TIE	ATTACHE CABLE FASCETTA CAVI	KABELBINDER APRIETACABLES
37	4279276M1		[H] ◀▶ 180 MM	**2**	CABLE TIE	ATTACHE CABLE FASCETTA CAVI	KABELBINDER APRIETACABLES
37	4279271M1		[G] ◀▶ 180 MM	**2**	CABLE TIE	ATTACHE CABLE FASCETTA CAVI	KABELBINDER APRIETACABLES
38*	4286708M1		[I] ➡ R321049	**2**	BRIDLE	BRIDE BRIGLIA	LASCHENSPANNBAND BRIDA
39*	391244X1		[I] M6 X 45 ➡ R321049	**1**	HEX. SOCK. SCREW	VIS TETE HEX VITE PARKER	ZYLINDERSCHRAUBE TORN.CAB.HUECA
40*	339262X1		[I] M6 X 30 ➡ R321049	**1**	HEX. SOCK. SCREW	VIS TETE HEX VITE PARKER	ZYLINDERSCHRAUBE TORN.CAB.HUECA
41*	339030X1		[I] M6 ➡ R321049	**2**	NUT	ECROU DADO	MUTTER TUERCA

Front Linkage **Attelage Avant** **Frontkraftheber** **Attacco Anteriore** **Enganche Delantero**	**Hydraulic** **Hydraulique** **Hydraulik** **Idraulico** **Hydraulico**	**40-110**	**With Front Linkage 50000n** **Avec Attelage Avant 50000n** **Mit Vordere Kupplung 50000n** **Con Attacco Anteriore 50000n** **Con Enganche Delantero 50000n**

1-WQ39-021-D

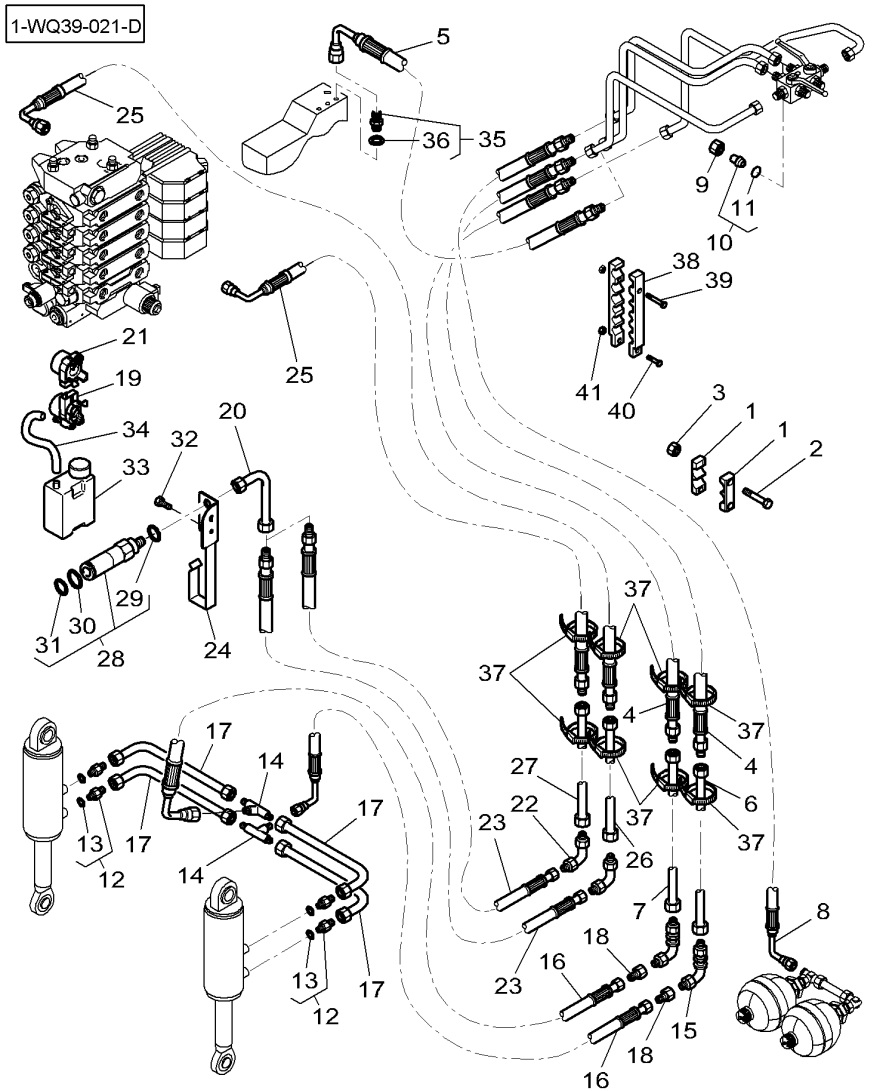

[A] WITH ACCUMULATOR
AVEC ACCUMULATEUR
MIT AKKUMULATOR
CON ACCUMULATORE
CON ACUMULADOR

[B] WITHOUT ACCUMULATOR
SANS ACCUMULATEUR
OHNE AKKUMULATOR
SENZA ACCUMULATORE
SIN ACUMULADOR

[C] WITH HYDRAULIC COUPLING
AVEC COUPLEUR HYDRAULIQUE
MIT HYDR. - KUPPLUNG
CON GIUNTO IDRAULICO
CON ACOPLADOR HIDRAULICO

[E] BLUE
BLEU
BLAU
AZZURRO
AZUL

[F] RED
ROUGE
ROT
ROSSO
ROJO

[G] YELLOW
JAUNE
GELB
GIALLO
AMARILLO

[H] GREEN
VERT
GRUEN
VERDE
VERDE

[I] VALID ALSO FOR TRACTOR R313045
VALABLE EGALEMENT POUR TRACTEUR R313045
GULTIG EBENFALLS FUR TRAKTOR R313045
VALIDO ANCHE PER TRATTORE R313045
VALIDO TAMBIEN PARA TRACTOR R313045

Front Linkage 50000n
Attelage Avant 50000n
Frontkraftheber 50000n
Attacco Anteriore 50000n
Enganche Delantero 50000n

40-115

1-WQ38-014-A

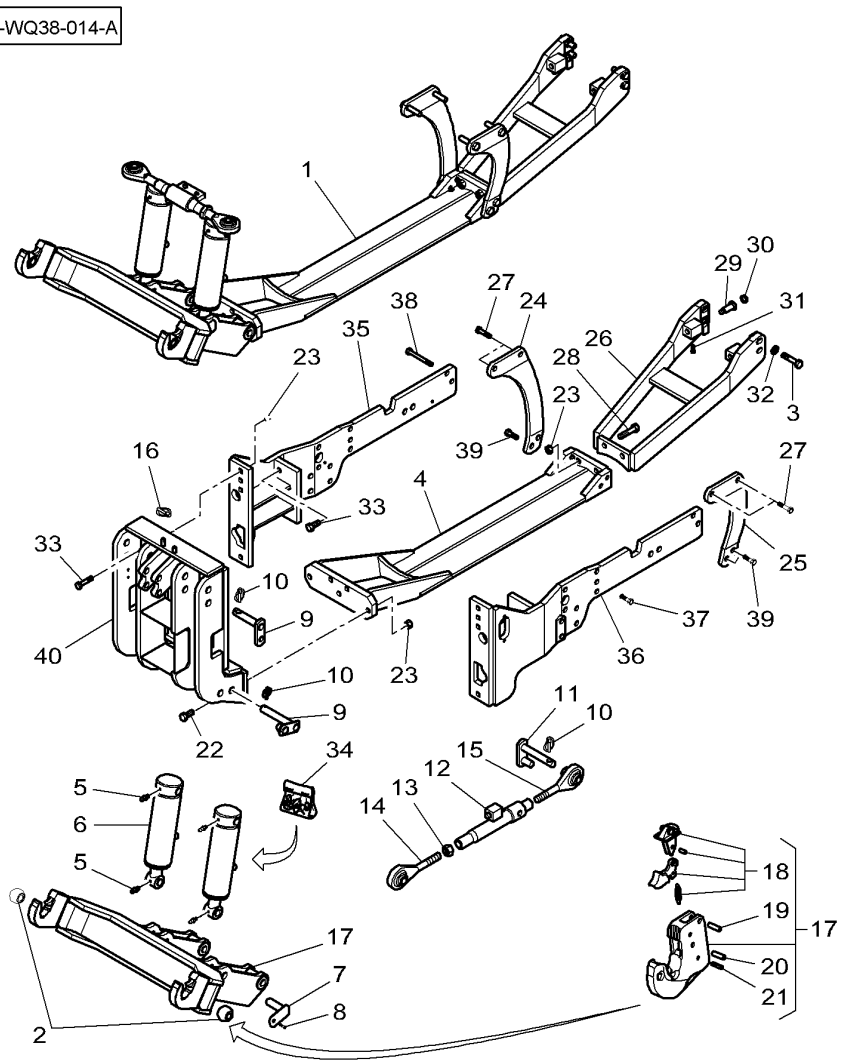

1	*4281038M93		
2	**3042430M1**	1	CAT 3
2	***4303395M1**	1	CAT 2-3
3	3010915X1	1	M20 X 70
4	4274252M2	1	
5	3900862M1	1	M6
6	4276810M1	1	
7	3783023M1	1	
8	339020X1	1	M12 X 20
9	3783022M1	1	
10	3782684M1	1	∅ 8 X 45
11	3783024M1	1	
12	3783027M1	1	
13	3010927X1	1	M36
14	**3783029M1**	1	▶
15	**3783030M1**	1	◀
16	3782691M1	1	∅ 6 X 45
17	3783021M2	1	
18	3903314M91	17	
19	3006429X1	17	∅ 10 X 36
20	3008317X1	17	∅ 13 X 36
21	339783X1	17	∅ 6 X 32
22	3010915X1	1	➡ S043003 M20 X 70
22	*3010569X1	1	➡ S043004 M20 X 80
23	3009747X1	1	M20
24	4280004M1	1	▶

1	HITCH	ATTELAGE ATTACCO	ANHAENGEKUPPLUNG ENGANCHE
2	TOGGLE	ROTULE ROTULA	GELENKZAPFEN ROTULA
2	TOGGLE	ROTULE ROTULA	GELENKZAPFEN ROTULA
4	HEX. SOCK. SCREW	VIS TETE HEX VITE PARKER	ZYLINDERSCHRAUBE TORN.CAB.HUECA
1	REINFORCEMENT	RENFORT RINFORZO	VERSTAERKUNG REFUERZO
6	GREASE FITTING	GRAISSEUR INGRASSATORE	DRUCKSCHMIERKOPF ENGRASADOR
2	RAM	VERIN CILINDRO IDRAUL.	HYDR.ZYLINDER ARIETE
2	CLEVIS PIN	AXE PERNO D'ATTACCO	SPLINTBOLZEN BULON CILINDRICO
2	HEX. SOCK. SCREW	VIS TETE HEX VITE PARKER	ZYLINDERSCHRAUBE TORN.CAB.HUECA
4	CLEVIS PIN	AXE PERNO D'ATTACCO	SPLINTBOLZEN BULON CILINDRICO
5	CLIP	PATTE D'ATTACHE FERMAGLIO	SCHELLE CLIP
1	SUPPORT	SUPPORT SOPPORTO	TRAGER SOPORTE
1	BODY	CORPS CORPO	RUMPF CUERPO
1	NUT	ECROU DADO	MUTTER TUERCA
1	TOGGLE	ROTULE ROTULA	GELENKZAPFEN ROTULA
1	TOGGLE	ROTULE ROTULA	GELENKZAPFEN ROTULA
1	CLIP	PATTE D'ATTACHE FERMAGLIO	SCHELLE CLIP
1	ARM	BRAS BRACCIO	SCHARHEBEL BRAZO
1	KIT, REPAIR	JEU REPARATION KIT RIPARAZIONE	REPARATURSATZ JUEGO REPARACION
1	PIN	GOUPILLE COPPIGLIA	STIFT PASADOR
1	PIN	GOUPILLE COPPIGLIA	STIFT PASADOR
1	PIN	GOUPILLE COPPIGLIA	STIFT PASADOR
4	HEX. SOCK. SCREW	VIS TETE HEX VITE PARKER	ZYLINDERSCHRAUBE TORN.CAB.HUECA
4	HEX. SOCK. SCREW	VIS TETE HEX VITE PARKER	ZYLINDERSCHRAUBE TORN.CAB.HUECA
15	NUT	ECROU DADO	MUTTER TUERCA
1	REINFORCEMENT	RENFORT RINFORZO	VERSTAERKUNG REFUERZO

Front Linkage 50000n
Attelage Avant 50000n
Frontkraftheber 50000n
Attacco Anteriore 50000n
Enganche Delantero 50000n

40-115

1-WQ38-014-A

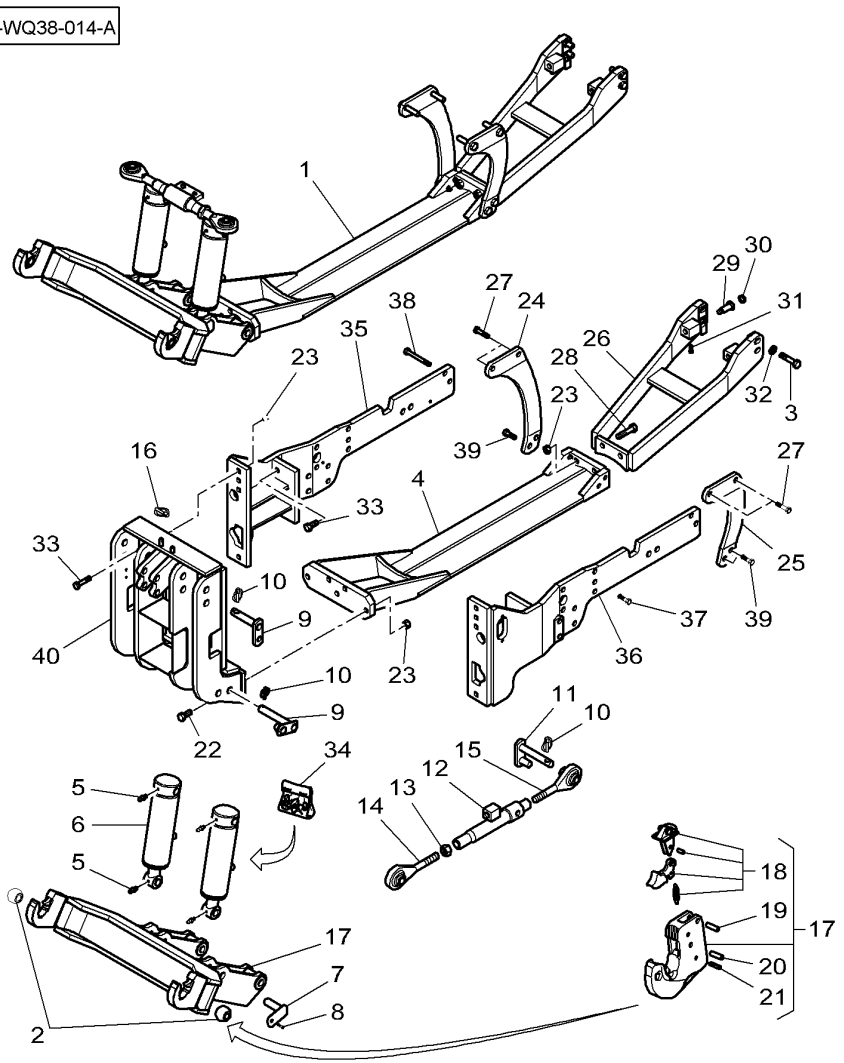

25	4280005M1	1 ◀	**1**	REINFORCEMENT	RENFORT RINFORZO	VERSTAERKUNG REFUERZO
26*	4280003M3	1	**1**	REINFORCEMENT	RENFORT RINFORZO	VERSTAERKUNG REFUERZO
27	3010045X1	1 M20 X 90	**4**	HEX. SOCK. SCREW	VIS TETE HEX VITE PARKER	ZYLINDERSCHRAUBE TORN.CAB.HUECA
28	3010915X1	1 M20 X 70	**2**	HEX. SOCK. SCREW	VIS TETE HEX VITE PARKER	ZYLINDERSCHRAUBE TORN.CAB.HUECA
29	3619813M1	1	**2**	SCREW	VIS VITE	SCHRAUBE TORNILLO
30	3619814M1	1	**2**	WASHER	RONDELLE RONDELLA	SCHEIBE ARANDELA
31	1440349X1	1 M8 X 30	**2**	SCREW	VIS VITE	SCHRAUBE TORNILLO
32	390039X1	1 ➡| S043003	**4**	WASHER	RONDELLE RONDELLA	SCHEIBE ARANDELA
32*	390975X1	1 ➡ S043004	**13**	FLAT WASHER	RONDELLE PLATE RONDELLE PIANA	UNTERLEGSCHEIBEN ARANDELA PLANA
33	391329X1	1 M20 X 70	**8**	HEX. SOCK. SCREW	VIS TETE HEX VITE PARKER	ZYLINDERSCHRAUBE TORN.CAB.HUECA
34	**3903317M91**		**1**	KIT, JOINT	JEU JOINTS KIT GIUNTO	DICHTUNGSSATZ JUEGO JUNTAS
35	3783633M7	▶	**1**	RUNNER	LONGERON GIRANTE*	LAEUFER RUEDA GIRATORIA
36	3783632M6	◀	**1**	RUNNER	LONGERON GIRANTE*	LAEUFER RUEDA GIRATORIA
37	3384129M1	M20 X 55	**8**	HEX. SOCK. SCREW	VIS TETE HEX VITE PARKER	ZYLINDERSCHRAUBE TORN.CAB.HUECA
38	3010045X1	M20 X 90	**4**	HEX. SOCK. SCREW	VIS TETE HEX VITE PARKER	ZYLINDERSCHRAUBE TORN.CAB.HUECA
39	1444105X1	M20 X 45	**4**	HEX. SOCK. SCREW	VIS TETE HEX VITE PARKER	ZYLINDERSCHRAUBE TORN.CAB.HUECA
40	4276811M4		**1**	FRAME	BATI TELAIO	RAHMEN BASTIDOR

Front Linkage 50000n
Attelage Avant 50000n
Frontkraftheber 50000n
Attacco Anteriore 50000n
Enganche Delantero 50000n

40-120

1-WQ38-015-A

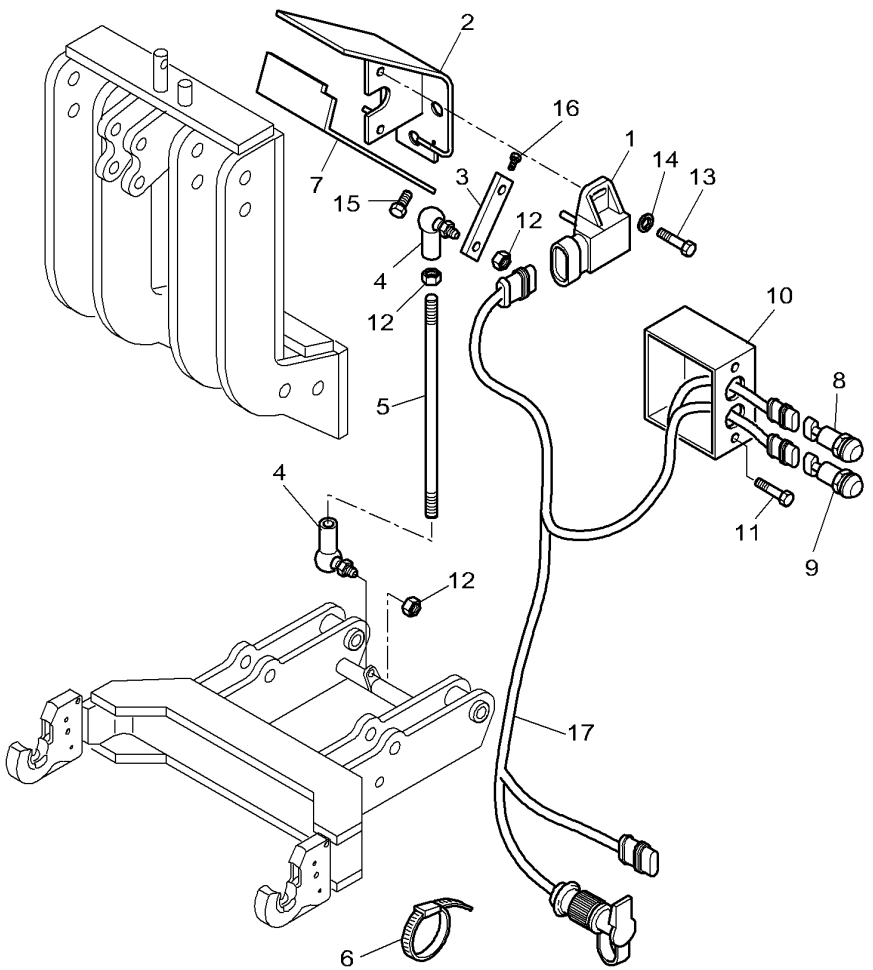

1	**3784361M1**		**1**	TRANSDUCER	CAPTEUR TRANSDUCER	NABENTRIEB. TRANSDUCER
2	3786259M1		**1**	SUPPORT	SUPPORT SOPPORTO	TRAGER SOPORTE
3	3786098M2	◀▶ 56 MM	**1**	ROD LINK	BIELLETTE BISCOTTINO	VERBINDG.STANGE VARILLA ENGANCHE
4	3782780M1	M6	**2**	STUB	EMBOUT CEPPO	STUMMEL SALIENTE
5	3786131M2	M6 ◀▶ 24 MM	**1**	STEM	TIGE ASTA DEL ZAPETTA	MESSERSTIEL VASTAGO
6	3619622M1		**10**	CABLE TIE	ATTACHE CABLE FASCETTA CAVI	KABELBINDER APRIETACABLES
7	3786133M2		**1**	COWL	GARANT CAPPOTTATURA	AUFSATZ CAPERUZA
8	**3714137M1**	[A]	**1**	SWITCH,INDIRECT	CONTACTEUR INTERRUTTORE IND	KONTAKTSCHALTER CONTACTOR
9	**3714138M1**	[B]	**1**	SWITCH,INDIRECT	CONTACTEUR INTERRUTTORE IND	KONTAKTSCHALTER CONTACTOR
10	3786186M2		**1**	SUPPORT	SUPPORT SOPPORTO	TRAGER SOPORTE
11	339009X1	M8 X 35	**2**	HEX. SOCK. SCREW	VIS TETE HEX VITE PARKER	ZYLINDERSCHRAUBE TORN.CAB.HUECA
12	392309X1	M8	**3**	NUT METRIC	ECROU METRIQUE DADO METRICO	MUTTER METRISCH TUERCA METRICO
13	1442171X1	M4 X 10	**2**	HEX. SOCK. SCREW	VIS TETE HEX VITE PARKER	ZYLINDERSCHRAUBE TORN.CAB.HUECA
14	339102X1	∅ 4-9 X 1	**2**	WASHER	RONDELLE RONDELLA	SCHEIBE ARANDELA
15	3009491X1	M10 X 20	**2**	HEX. SOCK. SCREW	VIS TETE HEX VITE PARKER	ZYLINDERSCHRAUBE TORN.CAB.HUECA
16	3011203X1	M4 X 10	**1**	SCREW	VIS VITE	SCHRAUBE TORNILLO
17	4280288M3		**1**	HARNESS	FAISCEAU FASCIOCAVI	KABELBAUM MAZO CABLES

[A] UP
MONTEE
GESTIEGEN
SALITA
SUBIDA

[B] DOWN
DESCENTE
HERABSTEIGEN
DISCESA
BAJADA

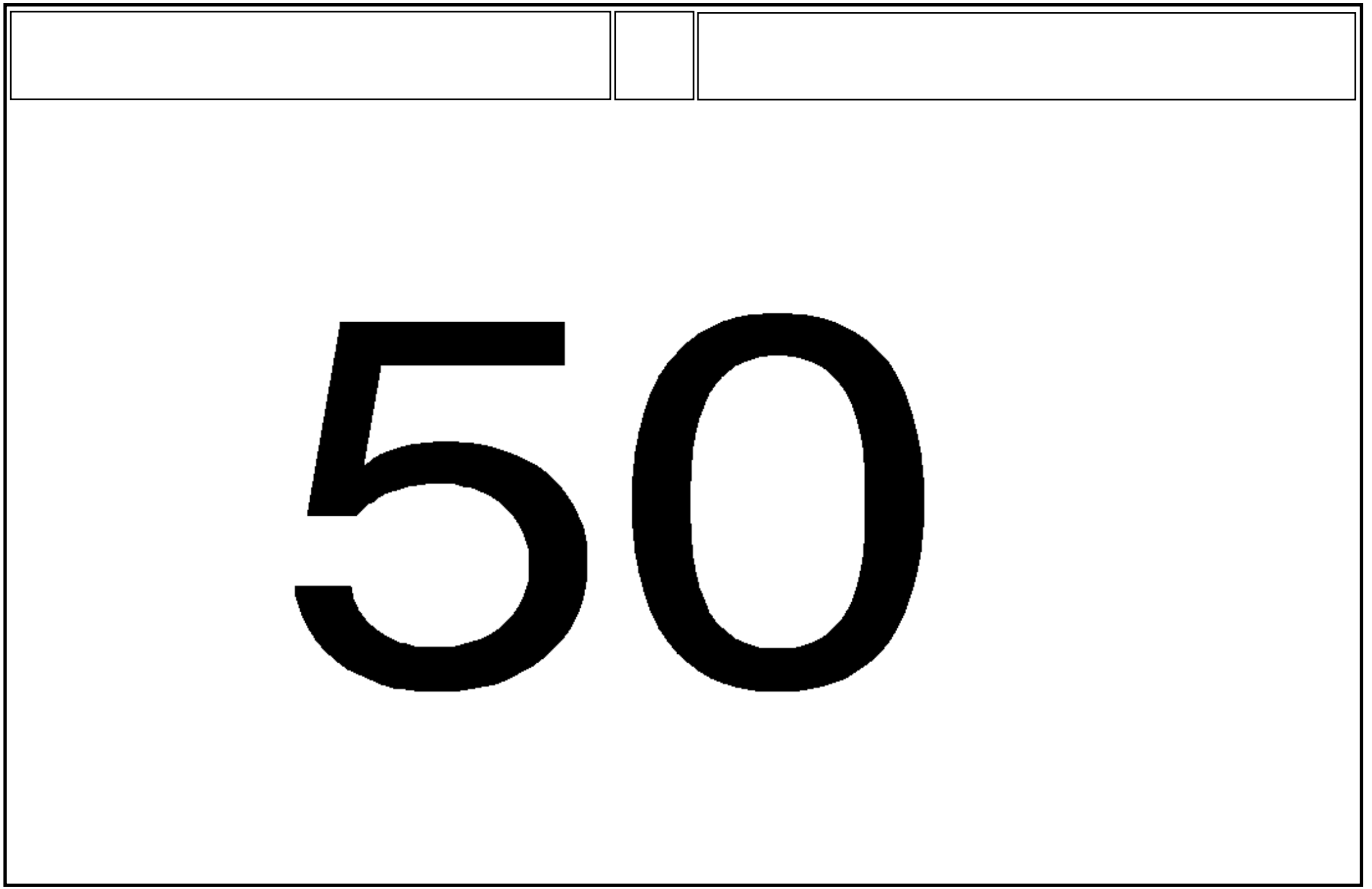
50

Independant Power Take Off Clutch
Embrayage De Prise De Force Independante
Ipto Kupplung
Frizione Pto Indipendente
Embrague De Toma De Fuerza Independiente

50-5

Up To 903/00200
Jusqu Au 903/00200
Bis 903/00200
Fino Alla 903/00200
Hasta 903/00200

1-WG23-013-A

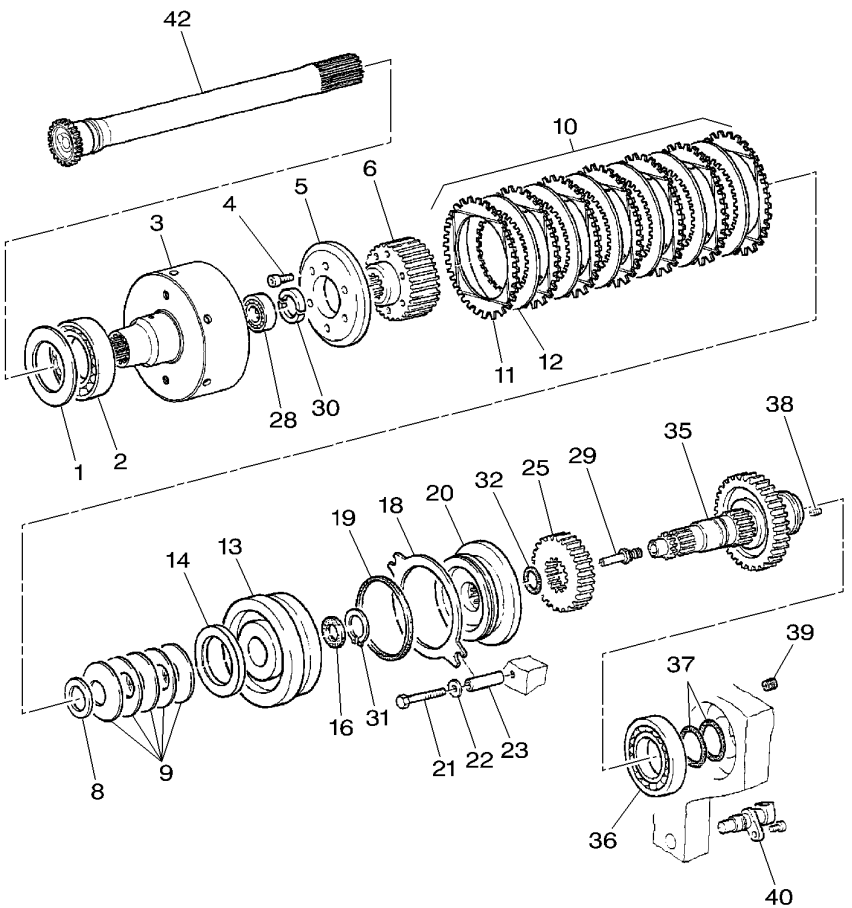

1	X534677046000	⧗ 0,10 MM	X	SHIM	CALE REGLAGE SPESSORE	AUSGLEICHSCHEIBE CALCE
1	X534677146000	⧗ 0,30 MM	X	SHIM	CALE REGLAGE SPESSORE	AUSGLEICHSCHEIBE CALCE
2	X605506311000		1	BALL BEARING	ROULEMENT BILLES CUSCINETTO SFERE	KUGELLAGER COJINETE DE BOLA
3	926150220160		1	CLUTCH HOUSING	COUV.CART.EMBRA. CLUTCH HOUSING	KUPPLUNGSGLOCKE CLUTCH HOUSING
4	X493607305000	M8 X 20	6	HEX. SOCK. SCREW	VIS TETE HEX VITE PARKER	ZYLINDERSCHRAUBE TORN.CAB.HUECA
5	822100220170		1	BACKUP RING	CONTRE BAGUE ANELLO APPOGGIO	STUETZRING ANILLA SOPORTE
6	822100220040		1	DISC CARRIER	PORTE DISQUE PORTADISCO	LAMELLENTRAEGER PORTALAMINAS
8	X534767700000	⧗ 0,50 MM	X	SHIM	CALE REGLAGE SPESSORE	AUSGLEICHSCHEIBE CALCE
8	X534767900000	⧗ 1,00 MM	X	SHIM	CALE REGLAGE SPESSORE	AUSGLEICHSCHEIBE CALCE
9	822100220510		5	CUP SPRING	RONDELLE RESSORT MOLLA CAPPELLOTT	TELLERFEDER CUBETA DE MUELLE
10	G926150220040		1	KIT, DISC	JEU DISQUE KIT, DISC	LAMELLENPAKET KIT, DISC
11		10 ⬓ REF. 10	7	EXTERNAL DISC	DISQUE EXTERIEUR DISCO ESTERNO	AUSSENLAMELLE DISCO EXTERIOR
12		10 ⬓ REF. 10	6	INTERNAL DISC	DISQUE INTERIEUR DISCO INTERNO	INNENLAMELLE DISCO INTERIOR
13	822100220840		1	PISTON	PISTON PISTONE	KOLBEN PISTON
14	822100220860		1	RING	ANNEAU ANELLO	RING. ANILLO
16	822100220530		1	SUPPORT COVER	COUVERC. SUPPORT SUPPORT COVER	ABSTUETZDECKEL SUPPORT COVER
18*	718150220080		1	EXTERNAL DISC	DISQUE EXTERIEUR DISCO ESTERNO	AUSSENLAMELLE DISCO EXTERIOR
19	822100220380		1	SUPPORT COVER	COUVERC. SUPPORT SUPPORT COVER	ABSTUETZDECKEL SUPPORT COVER
20	822100220850		1	BRAKE DISC	DISQUE DE FREIN DISCO FRENO	BREMSSCHEIBE DISCO DE FRENO
21	X487532541000	M10 X 70	2	SCREW	VIS VITE	SCHRAUBE TORNILLO
22	X521404447000		2	SPRING PLATE	PLAQUE RESSORT RONDELLA ELASTIC	FEDERSCHEIBE. PLETINA MUELLE
23	822100220080		2	BUSH	BAGUE BOCCOLA	RING CASQUILLO
25	822100220340	750-1000 TR/MM 25	1	SPUR GEAR	ENGRENAGE DROIT INGRANAGGIO DIR.	STIRNRAD RUEDA DE DIENTES
25	824100220010	540-1000 TR/MM 22	1	SPUR GEAR	ENGRENAGE DROIT INGRANAGGIO DIR.	STIRNRAD RUEDA DE DIENTES
28	H822100220070		1	BALL BEARING	ROULEMENT BILLES CUSCINETTO SFERE	KUGELLAGER COJINETE DE BOLA
29	916100220010		1	NOZZLE	NEZ INJECTEUR INIETTORE	DUESE TOBERA

Independant Power Take Off Clutch
Embrayage De Prise De Force Independante
Ipto Kupplung
Frizione Pto Indipendente
Embrague De Toma De Fuerza Independiente

50-5

Up To 903/00200
Jusqu Au 903/00200
Bis 903/00200
Fino Alla 903/00200
Hasta 903/00200

1-WG23-013-A

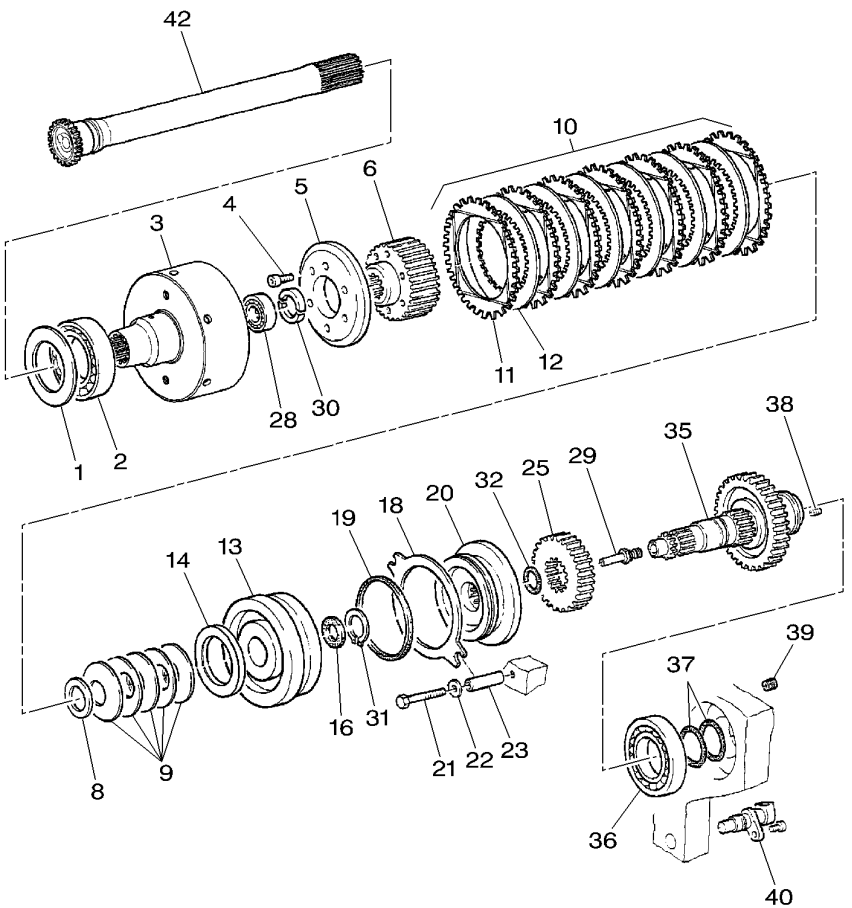

30	199100080110		**2**	HALF RING	DEMI ANNEAU SEMIANELLO	HALBRING MEDIA ARO
31	X530005446000	∅ 45 X 1,75	**1**	CIRCLIP	CIRCLIP ANNELLO ELASTICO	SEEGERING GRAPA CIRCULAR
32	X548909366000	∅ 40,2 X 3	**1**	O RING	JOINT TORIQUE GIUNTO DI TENUTA	O-RING JUNTA TOROIDAL
35	822100220520		**1**	SHAFT	ARBRE ALBERO	WELLE ARBOL
36	G822100220030		**1**	ROLLER BEARING	ROULEMENT GALETS CUSCINETTO RULLI	ROLLENLAGER COJINETE RODILLO
37	X560505900000		**2**	PLAIN COMPR.RING	SEGMENT RECTANG. PLAIN COMPR.RING	RECHTECKRING PLAIN COMPR.RING
38	X412823106000	M10 X 12	**1**	SCREW	VIS VITE	SCHRAUBE TORNILLO
39	822100220120		**1**	SHROUD	BUSE VELO	UMMANTELUNG BOVEDA
40		👁 90-95 No 11	**1**	TRANSMITTER	TRANSMETTEUR TRASMETTITORE	UEBERTRAEGER TRANSMISOR
42	926102080130		**1**	SHAFT	ARBRE ALBERO	WELLE ARBOL

Independant Power Take Off Clutch
Embrayage De Prise De Force Independante
Ipto Kupplung
Frizione Pto Indipendente
Embrague De Toma De Fuerza Independiente

50-10

From 903/00201 - Up To 903/00300 - From 903/01001
A Partir Du 903/00201 - Jusqu'Au 903/00300 - A Partir Du 903/01001
Ab 903/00201 - Bis 903/00300 - Ab 903/01001
Dalla 903/00201 - Fino 903/00300 - Dalla 903/01001
A Partir Del 903/00201 - Hasta 903/00300 - A Partir Del 903/01001

1-WG23-014-A

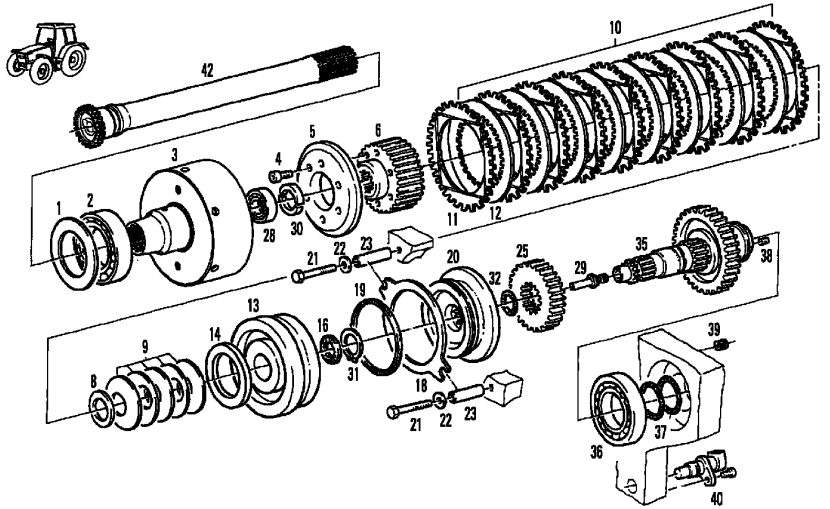

1	X534677046000	⧗ 0,10 MM	X	SHIM	CALE REGLAGE SPESSORE	AUSGLEICHSCHEIBE CALCE
1	X534677146000	⧗ 0,30 MM	X	SHIM	CALE REGLAGE SPESSORE	AUSGLEICHSCHEIBE CALCE
2	X605506311000		1	BALL BEARING	ROULEMENT BILLES CUSCINETTO SFERE	KUGELLAGER COJINETE DE BOLA
3	926150220210		1	CLUTCH HOUSING	COUV.CART.EMBRA. CLUTCH HOUSING	KUPPLUNGSGLOCKE CLUTCH HOUSING
4	X493607305000	M8 X 20	6	HEX. SOCK. SCREW	VIS TETE HEX VITE PARKER	ZYLINDERSCHRAUBE TORN.CAB.HUECA
5	822100220170		1	BACKUP RING	CONTRE BAGUE ANELLO APPOGGIO	STUETZRING ANILLA SOPORTE
6	926150220230		1	DISC CARRIER	PORTE DISQUE PORTADISCO	LAMELLENTRAEGER PORTALAMINAS
8	X534767700000	⧗ 0,50 MM	X	SHIM	CALE REGLAGE SPESSORE	AUSGLEICHSCHEIBE CALCE
8	X534767900000	⧗ 1,00 MM	X	SHIM	CALE REGLAGE SPESSORE	AUSGLEICHSCHEIBE CALCE
9	822100220510		5	CUP SPRING	RONDELLE RESSORT MOLLA CAPPELLOTT	TELLERFEDER CUBETA DE MUELLE
10	G926150220050		1	KIT, DISC	JEU DISQUE KIT, DISC	LAMELLENPAKET KIT, DISC
11		10 REF. 10	9	EXTERNAL DISC	DISQUE EXTERIEUR DISCO ESTERNO	AUSSENLAMELLE DISCO EXTERIOR
12		10 REF. 10	8	INTERNAL DISC	DISQUE INTERIEUR DISCO INTERNO	INNENLAMELLE DISCO INTERIOR
13*	926150220080	⇒ 926150220050	1	RING	ANNEAU ANELLO	RING. ANILLO
14	926150220220		1	RING	ANNEAU ANELLO	RING. ANILLO
16	822100220530		1	SUPPORT COVER	COUVERC. SUPPORT SUPPORT COVER	ABSTUETZDECKEL SUPPORT COVER
18*	718150220080		1	EXTERNAL DISC	DISQUE EXTERIEUR DISCO ESTERNO	AUSSENLAMELLE DISCO EXTERIOR
19	822100220380		1	SUPPORT COVER	COUVERC. SUPPORT SUPPORT COVER	ABSTUETZDECKEL SUPPORT COVER
20	822100220850		1	BRAKE DISC	DISQUE DE FREIN DISCO FRENO	BREMSSCHEIBE DISCO DE FRENO
21	X487532541000	M10 X 70	2	SCREW	VIS VITE	SCHRAUBE TORNILLO
22	X521404447000		2	SPRING PLATE	PLAQUE RESSORT RONDELLA ELASTIC	FEDERSCHEIBE. PLETINA MUELLE
23	822100220080		2	BUSH	BAGUE BOCCOLA	RING CASQUILLO
25	822100220340	750-1000 TR/MM 25	1	SPUR GEAR	ENGRENAGE DROIT INGRANAGGIO DIR.	STIRNRAD RUEDA DE DIENTES
25	824100220010	540-1000 TR/MM 22	1	SPUR GEAR	ENGRENAGE DROIT INGRANAGGIO DIR.	STIRNRAD RUEDA DE DIENTES
28	H822100220070		1	BALL BEARING	ROULEMENT BILLES CUSCINETTO SFERE	KUGELLAGER COJINETE DE BOLA
29	916100220010		1	NOZZLE	NEZ INJECTEUR INIETTORE	DUESE TOBERA

Independant Power Take Off Clutch
Embrayage De Prise De Force Independante
Ipto Kupplung
Frizione Pto Indipendente
Embrague De Toma De Fuerza Independiente

50-10

From 903/00201 - Up To 903/00300 - From 903/01001
A Partir Du 903/00201 - Jusqu'Au 903/00300 - A Partir Du 903/01001
Ab 903/00201 - Bis 903/00300 - Ab 903/01001
Dalla 903/00201 - Fino 903/00300 - Dalla 903/01001
A Partir Del 903/00201 - Hasta 903/00300 - A Partir Del 903/01001

1-WG23-014-A

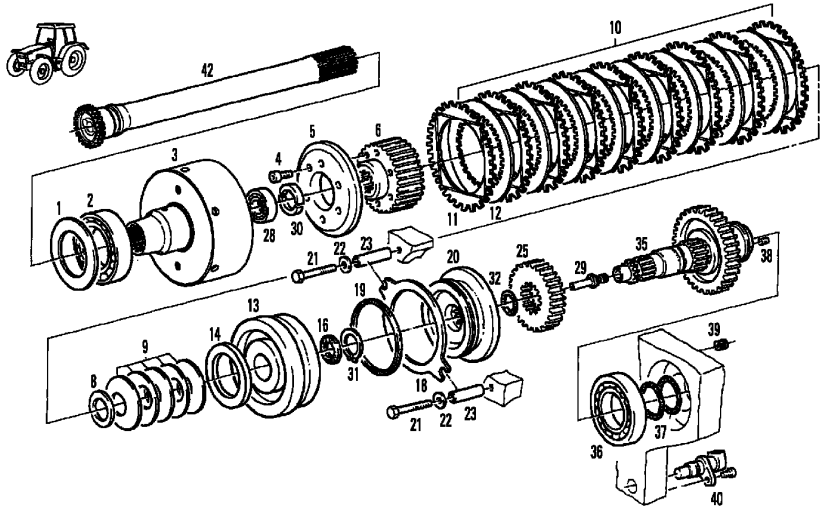

30	199100080110		**2**	HALF RING	DEMI ANNEAU SEMIANELLO	HALBRING MEDIA ARO
31	X530005446000	∅ 45 X 1,75	**1**	CIRCLIP	CIRCLIP ANNELLO ELASTICO	SEEGERING GRAPA CIRCULAR
32	X548909366000	∅ 40,2 X 3	**1**	O RING	JOINT TORIQUE GIUNTO DI TENUTA	O-RING JUNTA TOROIDAL
35	822100220521		**1**	SHAFT	ARBRE ALBERO	WELLE ARBOL
36	G822100220030		**1**	ROLLER BEARING	ROULEMENT GALETS CUSCINETTO RULLI	ROLLENLAGER COJINETE RODILLO
37	X560505900000		**2**	PLAIN COMPR.RING	SEGMENT RECTANG. PLAIN COMPR.RING	RECHTECKRING PLAIN COMPR.RING
38	X412823106000	M10 X 12	**1**	SCREW	VIS VITE	SCHRAUBE TORNILLO
39	822100220120		**1**	SHROUD	BUSE VELO	UMMANTELUNG BOVEDA
40		👁 90-95 No 11	**1**	TRANSMITTER	TRANSMETTEUR TRASMETTITORE	UEBERTRAEGER TRANSMISOR
42	926102080130		**1**	SHAFT	ARBRE ALBERO	WELLE ARBOL

Engine P . T . O	Flange - Bridle
Prise De Force Independante	Flasque - Bride
Motorzapfwelle	Flansh - Spannband
Presa Di Forza Indipendente	Flangia - Briglia
Toma De Fuerza Independiente	Pletina - Brida

50-15

1-WG78-002-A

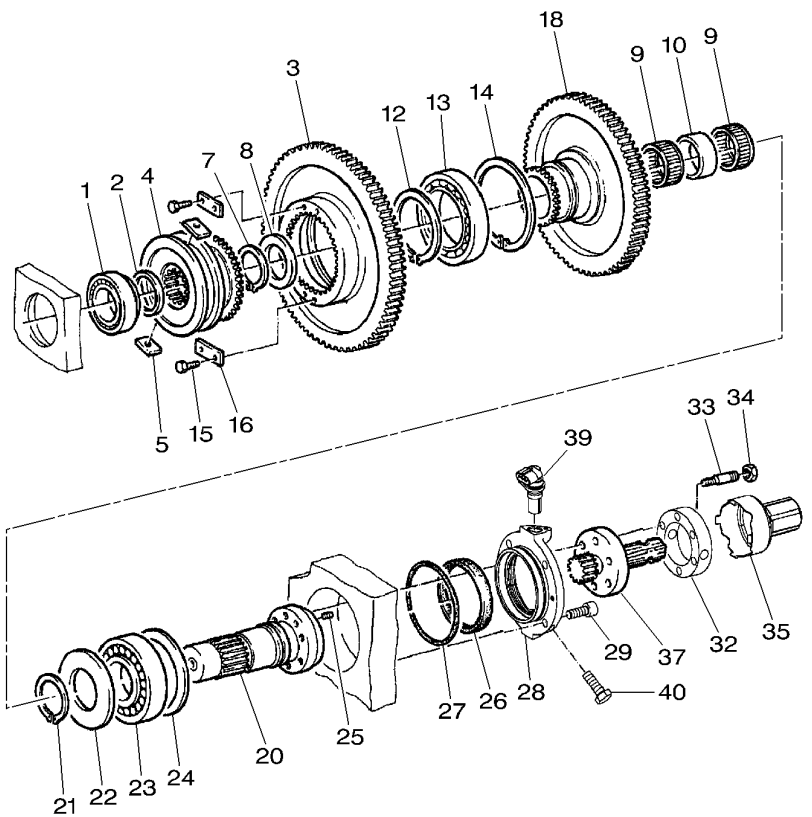

1	X619049041009		**1**	CUP AND CONE	CUVETTE ET CONE COPPA E CONO	KEGELROLLENLAGER PISTA Y CONO
2	X534566246000	∅ 50 X 62	**1**	BACKUP RING	CONTRE BAGUE ANELLO APPOGGIO	STUETZRING ANILLA SOPORTE
3	822100220310	750-1000 TR/MM 74	**1**	SPUR GEAR	ENGRENAGE DROIT INGRANAGGIO DIR.	STIRNRAD RUEDA DE DIENTES
3	824100220020	540-1000 TR/MM 83	**1**	SPUR GEAR	ENGRENAGE DROIT INGRANAGGIO DIR.	STIRNRAD RUEDA DE DIENTES
4	822100220330		**1**	COUPLER	COUPLEUR ACCOPPIATORE	KUPPLER ACOPLADOR
5	822100220150		**2**	SLIDE	COULISSE SLITTA	GLEITSTUECK CORREDERA
7	X530006146000	∅ 55 X 2	**1**	CIRCLIP	CIRCLIP ANNELLO ELASTICO	SEEGERING GRAPA CIRCULAR
8	822100220210		**1**	DISC	DISQUE DISCO	SCHEIBE DISCO
9	H312100222020		**2**	NEEDLE CAGE	CAGE A AIGUILLES PORTAGHI	NADELKAEFIG JUALA DE AGUJA
10	822100220220		**1**	SPACER	ENTRETOISE DISTANZIALE	ABSTANDSTUECK DISCO ESPACIADOR
12	X530007946000	∅ 85 X 3	**1**	CIRCLIP	CIRCLIP ANNELLO ELASTICO	SEEGERING GRAPA CIRCULAR
13	X605506600000		**1**	BALL BEARING	ROULEMENT BILLES CUSCINETTO SFERE	KUGELLAGER COJINETE DE BOLA
14	X530325046000	∅ 130 X 4	**1**	CIRCLIP	CIRCLIP ANNELLO ELASTICO	SEEGERING GRAPA CIRCULAR
15	X487520041000	M6 X 16	**4**	SCREW	VIS VITE	SCHRAUBE TORNILLO
16	822100220200		**2**	STOP	BUTEE STOP	ANSCHLAG PARO
18	822100220300	65	**1**	SPUR GEAR	ENGRENAGE DROIT INGRANAGGIO DIR.	STIRNRAD RUEDA DE DIENTES
20	H822100220010		**1**	SHAFT	ARBRE ALBERO	WELLE ARBOL
21	X530009100000	∅ 65 X 4	**1**	CIRCLIP	CIRCLIP ANNELLO ELASTICO	SEEGERING GRAPA CIRCULAR
22	716151220210		**1**	THRUST WASHER	RONDELLE BUTEE RONDELLA REGGISP	ANLAUFSCHEIBE ARANDELA ACELER
23	X619049341009		**1**	CUP AND CONE	CUVETTE ET CONE COPPA E CONO	KEGELROLLENLAGER PISTA Y CONO
24	X534678300000	0,10 MM	**X**	SHIM	CALE REGLAGE SPESSORE	AUSGLEICHSCHEIBE CALCE
24	X534678400000	0,15 MM	**X**	SHIM	CALE REGLAGE SPESSORE	AUSGLEICHSCHEIBE CALCE
24	X534678500000	0,20 MM	**X**	SHIM	CALE REGLAGE SPESSORE	AUSGLEICHSCHEIBE CALCE
24	X534678600000	0,30 MM	**X**	SHIM	CALE REGLAGE SPESSORE	AUSGLEICHSCHEIBE CALCE
24	X534678700000	0,50 MM	**X**	SHIM	CALE REGLAGE SPESSORE	AUSGLEICHSCHEIBE CALCE
25	X413420206000	M6 X 16	**2**	GRUB SCREW	VIS SANS TETE VITE SENZA TESTA	GEWINDESTIFT TORNILLO SIN CAB

Engine P . T . O	Flange - Bridle
Prise De Force Independante	Flasque - Bride
Motorzapfwelle	Flansh - Spannband
Presa Di Forza Indipendente	Flangia - Briglia
Toma De Fuerza Independiente	Pletina - Brida

50-15

1-WG78-002-A

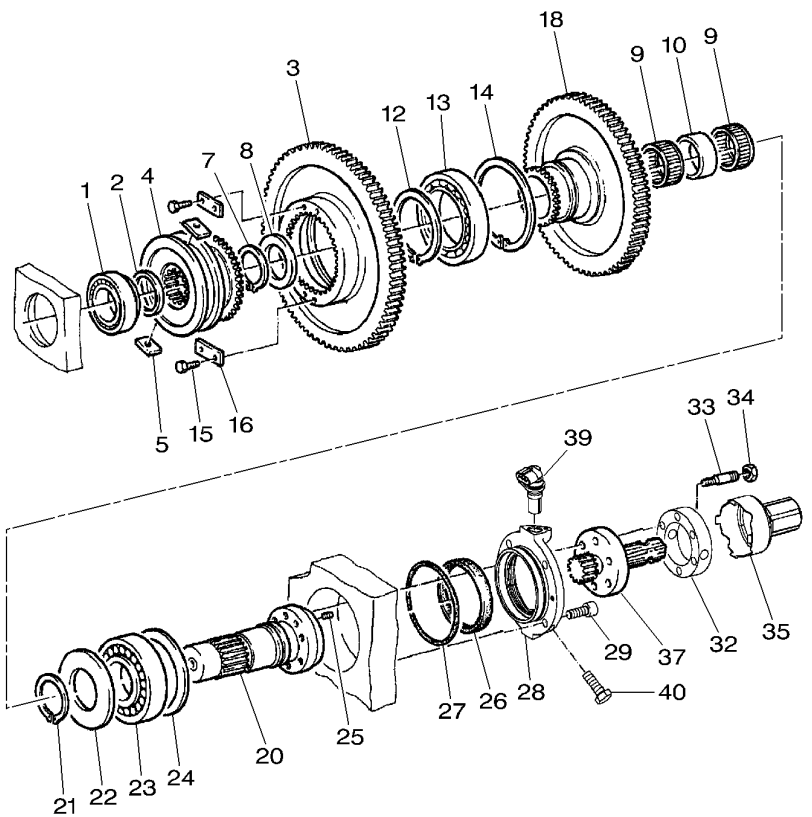

26	X550162800000	95 X 110 X 10	**1**	OIL SEAL	BAGUE ETANCHEITE BOCCOLA PARAOLIO	OELDICHTRING BUJE RETENACEITE
27	X548994700000	∅ 114 X 3	**1**	O RING	JOINT TORIQUE GIUNTO DI TENUTA	O-RING JUNTA TOROIDAL
28	926150220200		**1**	COVER	COUVERCLE COPERCHIO	ABDECKUNG. CUBIERTA
29	X485018905000	M12 X 35	**4**	HEX. SOCK. SCREW	VIS TETE HEX VITE PARKER	ZYLINDERSCHRAUBE TORN.CAB.HUECA
32*	926150220080	⇒ 926150220050	**1**	RING	ANNEAU ANELLO	RING. ANILLO
33	X489132106000	M10 X 50	**6**	STUD	GOUJON SPINOTTO FILETT.	STEHBOLZEN ESPARRAGO ROSCA.
33*	X489132006000	M10 X 45	**6**	STUD	GOUJON SPINOTTO FILETT.	STEHBOLZEN ESPARRAGO ROSCA.
34	X428202805000	M10	**6**	NUT	ECROU DADO	MUTTER TUERCA
35	926150220060		**1**	PTO GUARD	PTO PROTECTEUR PTO RIPARO	PTO SCHUTZ DEFENSA TDF
37	926150220040	21 1 3/83	**1**	PTO SHAFT	ARBRE PTO PTO ALBERO	PTO GELWELLE EJE TDF
37	926150220030	[A] 6 1 3/8"	**1**	PTO SHAFT	ARBRE PTO PTO ALBERO	PTO GELWELLE EJE TDF
37*	926150220070	20 1 3/4"	**1**	FLANGED PIN	AXE ENTRAINEUR FLANGED PIN	FLANSCHZAPFEN FLANGED PIN
37*	926150220010	6 1 3/4"	**1**	FLANGED PIN	AXE ENTRAINEUR FLANGED PIN	FLANSCHZAPFEN FLANGED PIN
39		90-95 No 11	**1**	TRANSMITTER	TRANSMETTEUR TRASMETTITORE	UEBERTRAEGER TRANSMISOR
40	X487545241000	M16 X 40	**1**	SCREW	VIS VITE	SCHRAUBE TORNILLO

[A] OPTION ONLY
OPTION SEULEMENT
NUR WAHL
OPZIONE SOLTANTO
OPCION SOLAMENTE

Engine P . T . O	Cylinder
Prise De Force Independante	Cylindre
Motorzapfwelle	Zylinder
Presa Di Forza Indipendente	Cilindro
Toma De Fuerza Independiente	Cilindro

50-20

1-WG90-001-A

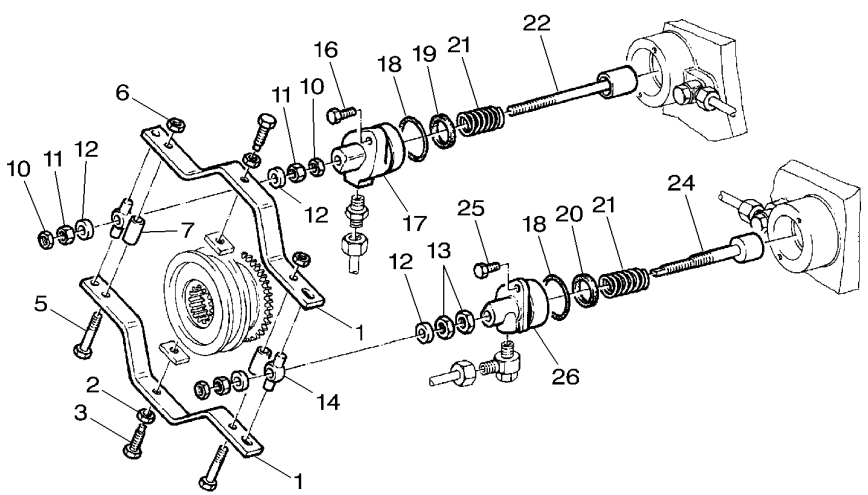

1	822100220250		**2**	STIRRUP	ETRIER STAFFA	BUEGEL FUACION
2	X428203203000	M12	**2**	NUT	ECROU DADO	MUTTER TUERCA
3	822100220390		**2**	STUD	GOUJON SPINOTTO FILETT.	STEHBOLZEN ESPARRAGO ROSCA.
5	X487532541000	M10 X 70	**2**	SCREW	VIS VITE	SCHRAUBE TORNILLO
6	X428202839000	M10	**2**	NUT	ECROU DADO	MUTTER TUERCA
7	822100220260		**2**	TUBE	TUBE TUBO.	ROHR TUBO.
10	X428803240000	M12	**3**	NUT	ECROU DADO	MUTTER TUERCA
11	X428203203000	M12	**3**	NUT	ECROU DADO	MUTTER TUERCA
12	822100220470		**4**	DISC	DISQUE DISCO	SCHEIBE DISCO
13	X428804040000	M16	**2**	NUT	ECROU DADO	MUTTER TUERCA
14	822100220240		**2**	SPACER	ENTRETOISE DISTANZIALE	ABSTANDSTUECK DISCO ESPACIADOR
16	X487531941000	M10 X 40	**2**	SCREW	VIS VITE	SCHRAUBE TORNILLO
17	822100220100		**1**	CYLINDER	CYLINDRE CILINDRO	ZYLINDER CILINDRO
18	X548926801000	∅ 50 X 3	**2**	O RING	JOINT TORIQUE GIUNTO DI TENUTA	O-RING JUNTA TOROIDAL
19	X548766700000		**1**	SEAL SECTION	PROFIL ETANCH SEZIONE TENUTA	DICHTPROFIL PARTE DE RETEN
20	X548767000000		**1**	SEAL SECTION	PROFIL ETANCH SEZIONE TENUTA	DICHTPROFIL PARTE DE RETEN
21	822100220110		**2**	COMP.SPRING	RESSORT DE COMPR MOLLA COMPOSTA	DRUCKFEDER RESORTE DE COMP.
22	H822100220080		**1**	PISTON	PISTON PISTONE	KOLBEN PISTON
24	822100220610		**1**	PISTON	PISTON PISTONE	KOLBEN PISTON
25	X487531505000	M10 X 25	**2**	SCREW	VIS VITE	SCHRAUBE TORNILLO
26	822100220620		**1**	CYLINDER	CYLINDRE CILINDRO	ZYLINDER CILINDRO

Engine P . T . O	Pipes
Prise De Force Independante	Tuyauteries
Motorzapfwelle	Rohrleitung
Presa Di Forza Indipendente	Tubatura
Toma De Fuerza Independiente	Tuberias

50-25

1-WG29-003-A

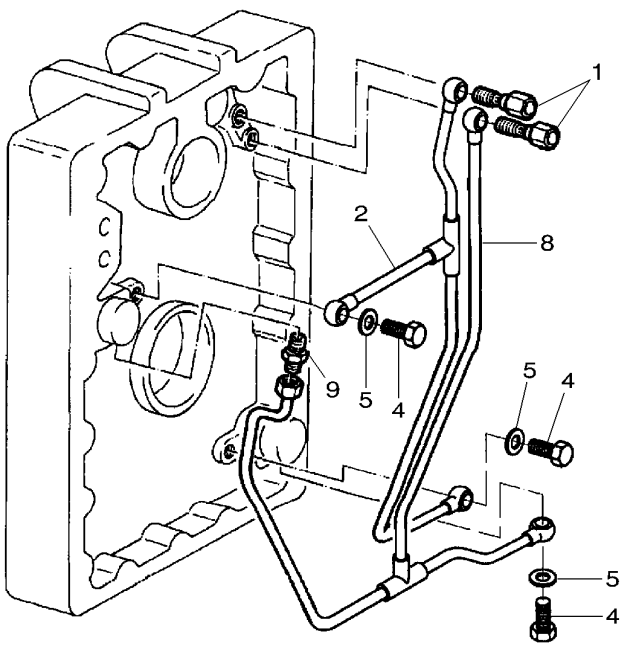

1	822100620400	**2**	CENTER PIECE	PIECE INTERME CENTER PIECE	MITTELSTUECK PIEZA INTERMEDIA
2	H822100620310	**1**	PIPE	TUYAU TUBO	TUBE TUBO
4	822100620460	**3**	UNION	RACCORD RACCORDO	VERSCHRAUBUNG RACOR
5	X450008708000	**3**	WASHER	RONDELLE RONDELLA	SCHEIBE ARANDELA
8	H822100620300	**1**	PIPE	TUYAU TUBO	TUBE TUBO
9	822100620450	**1**	THREAD. PART	PIECE A VISSER THREAD. PART	SCHRAUBSTUECK PIEZA ROSCADO

Guard	Pto
Garant	Prise De Force
Schutzbleche	Zapfwelle
Difesa	Presa Di Forza
Proteccion	Toma De Fuerza

50-30

With Clevis Quick Adjustment
Avec Chape A Reglage Rapide
Mit Gabelstueck Schnelleinstellung
Con Gancio D'Attacco Aggiustatore Rapido
Con Dispositivo De Sosten A Ajuste Rapido

1-WR10-011-B

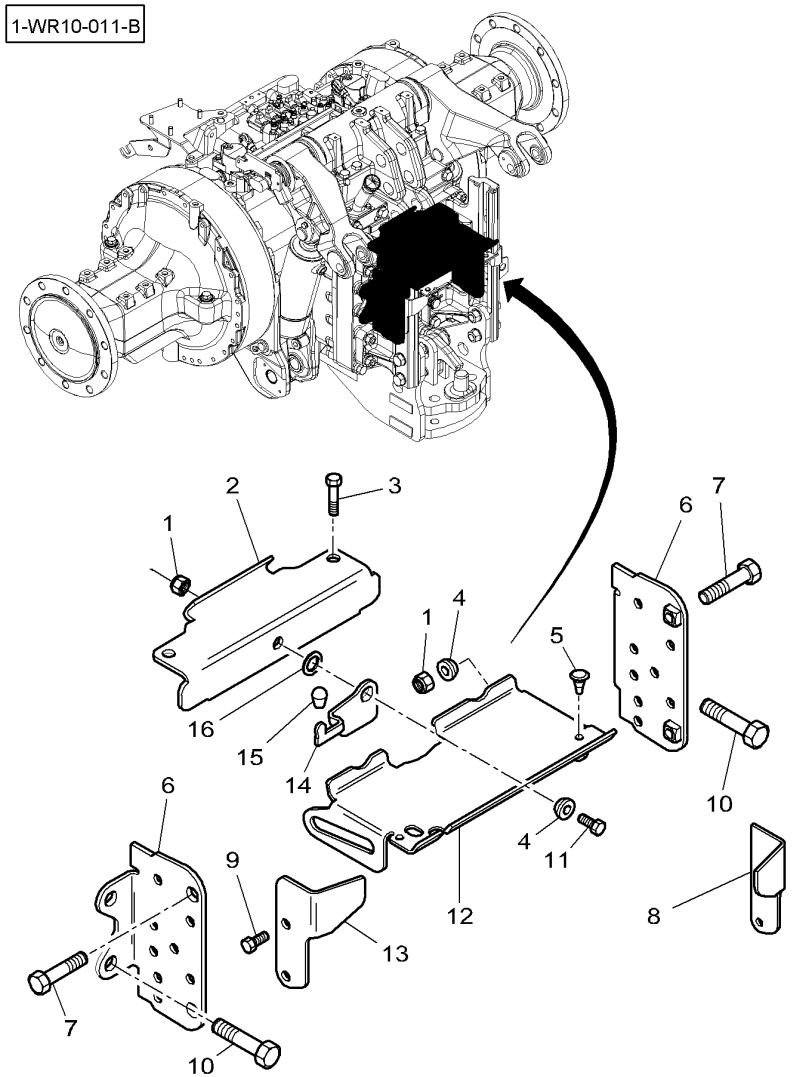

1	1440329X1		**3**	LOCKNUT	ECROU FREIN AUTOBLOCCANTE	SICHERUNGSMUTTER CONTRATUERCA
2*	H931500110010		**1**	HOLDER	PIECE SUPPORT SUPPORTO DI BASE	HALTER SUJETADOR
3	339337X1	M8 X 30	**2**	HEX. SOCK. SCREW	VIS TETE HEX VITE PARKER	ZYLINDERSCHRAUBE TORN.CAB.HUECA
4	816960700020		**3**	BUSH	BAGUE BOCCOLA	RING CASQUILLO
5	205900163040		**2**	PLUG	BOUCHON TAPPO	STOPFEN TAPON
6*	H931500110030		**2**	PROTECTOR	PROTECTEUR PROTETTORE	SCHUTZ PROTECTOR
7	3009494X1	M10 X 35	**2**	HEX. SOCK. SCREW	VIS TETE HEX VITE PARKER	ZYLINDERSCHRAUBE TORN.CAB.HUECA
8	4282170M1		**1**	STOP	BUTEE STOP	ANSCHLAG PARO
9	339123X1	M8 X 20	**4**	HEX. SOCK. SCREW	VIS TETE HEX VITE PARKER	ZYLINDERSCHRAUBE TORN.CAB.HUECA
10	3011545X1	M18 X 110	**4**	HEX. SOCK. SCREW	VIS TETE HEX VITE PARKER	ZYLINDERSCHRAUBE TORN.CAB.HUECA
11	3009492X1	M10 X 25	**1**	HEX. SOCK. SCREW	VIS TETE HEX VITE PARKER	ZYLINDERSCHRAUBE TORN.CAB.HUECA
12*	931500110030		**1**	FLAP	ABATTANT RIBALTA	KLAPPE SOLAPA
13	916501110050	◄	**1**	STAND	BEQUILLE CAVALLETTO	STANDER CABALLETE
14	916501110040		**1**	LEVER	LEVIER LEVA	HEBEL PALANCA
15	X562555063000		**1**	CAP	CHAPEAU CAPUCHON	KAPPE TAPA
16	311200020050		**1**	DISC	DISQUE DISCO	SCHEIBE DISCO

Guard	Pto
Garant	Prise De Force
Schutzbleche	Zapfwelle
Difesa	Presa Di Forza
Proteccion	Toma De Fuerza

50-35

1-WR10-007-A

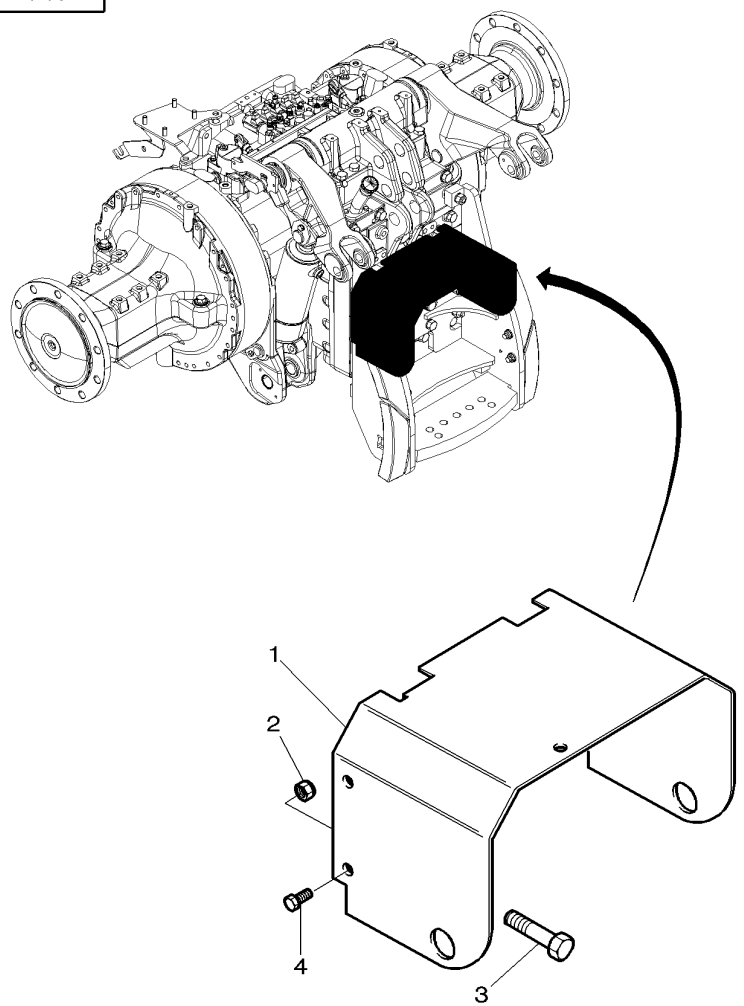

1	920501110010		**1**	PTO GUARD	PTO PROTECTEUR PTO RIPARO	PTO SCHUTZ DEFENSA TDF
2	339402X1		**4**	NUT SPECIAL	ECROU SPECIAL DADO SPECIALE	SPEZIALMUTTER TUERCA ESPECIAL
3	3011545X1	M18 X 110	**4**	HEX. SOCK. SCREW	VIS TETE HEX VITE PARKER	ZYLINDERSCHRAUBE TORN.CAB.HUECA
4	3009494X1	M10 X 35	**4**	HEX. SOCK. SCREW	VIS TETE HEX VITE PARKER	ZYLINDERSCHRAUBE TORN.CAB.HUECA

60

Weight Frame And Tow Pin
Support De Masses Et Broche
Gewichtrahmen Und Kupplungsbolzen
Telaio Pesante E Perno Di Rimorchio
Bastidor Para Pesas Y Perno De Remolque

60-5

1-WX15-012-B

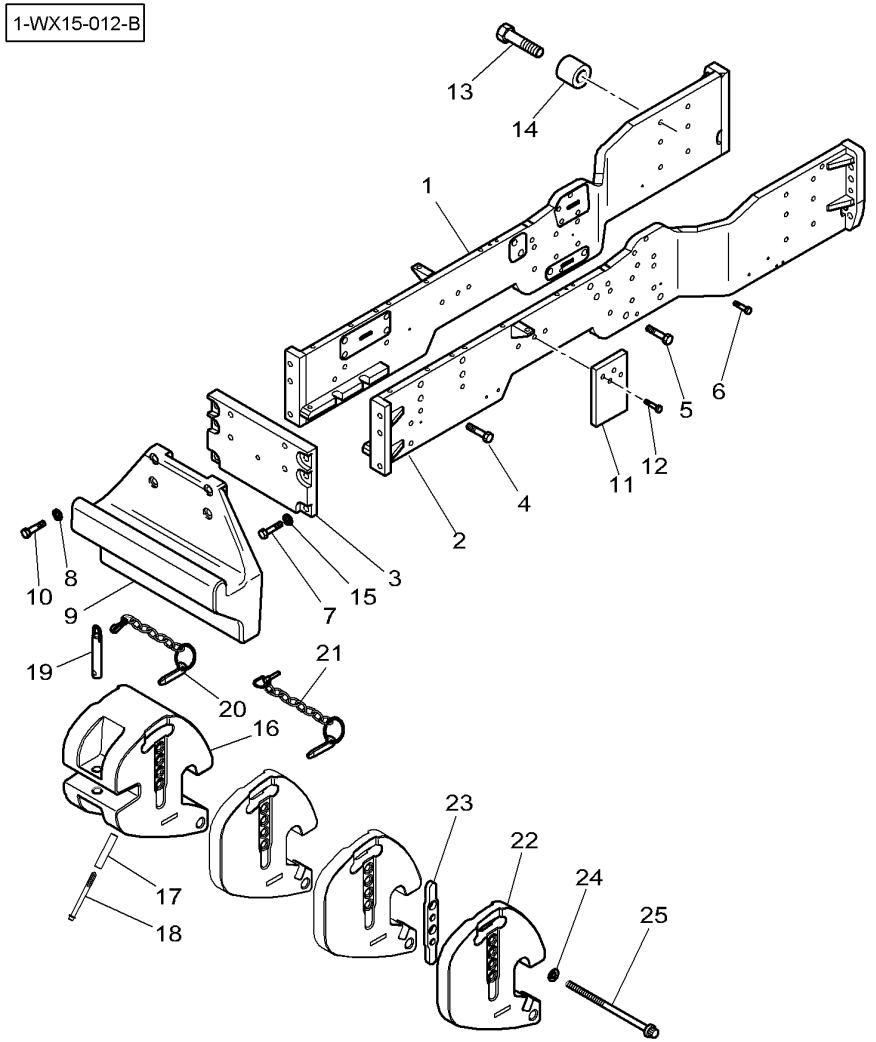

1	4280009M92	▶	**1**	RUNNER	LONGERON GIRANTE*	LAEUFER RUEDA GIRATORIA
2	4280008M92	◀	**1**	RUNNER	LONGERON GIRANTE*	LAEUFER RUEDA GIRATORIA
3	4270022M3		**1**	PLATE	PLAQUE PIASTRA	PLATTE PLATO
4	3581527M1	M20 X 75	**12**	HEX. SOCK. SCREW	VIS TETE HEX VITE PARKER	ZYLINDERSCHRAUBE TORN.CAB.HUECA
4*	3010966X1	[A]	**6**	HEX. SOCK. SCREW	VIS TETE HEX VITE PARKER	ZYLINDERSCHRAUBE TORN.CAB.HUECA
4*	3010976X1	[A]	**2**	SCREW	VIS VITE	SCHRAUBE TORNILLO
5*	3010915X1	M20 X 70	**4**	HEX. SOCK. SCREW	VIS TETE HEX VITE PARKER	ZYLINDERSCHRAUBE TORN.CAB.HUECA
6	3010782X1	M14 X 55	**8**	HEX. SOCK. SCREW	VIS TETE HEX VITE PARKER	ZYLINDERSCHRAUBE TORN.CAB.HUECA
6*	3019852X1	M12 X 55	**8**	HEX. SOCK. SCREW	VIS TETE HEX VITE PARKER	ZYLINDERSCHRAUBE TORN.CAB.HUECA
7	3386216M1	M20 X 60	**6**	HEX. SOCK. SCREW	VIS TETE HEX VITE PARKER	ZYLINDERSCHRAUBE TORN.CAB.HUECA
8			**X**	WASHER	RONDELLE RONDELLA	SCHEIBE ARANDELA
9	5017891M1		**1**	FRAME	BATI TELAIO	RAHMEN BASTIDOR
10	3010434X1	M20 X 80	**4**	SCREW METRIC	VIS METRIQUE VITE METRICA	SCHRAUBE METR TORNILLO METRICO
11	5015565M1		**2**	PLATE	PLAQUE PIASTRA	PLATTE PLATO
12*	3011849X1	M20 X 50	**4**	SCREW	VIS VITE	SCHRAUBE TORNILLO
12*	3011733X1	[A] M20 X 70	**4**	SCREW	VIS VITE	SCHRAUBE TORNILLO
13	3001968X1	M20 X 60	**1**	HEX. SOCK. SCREW	VIS TETE HEX VITE PARKER	ZYLINDERSCHRAUBE TORN.CAB.HUECA
14	3011675X1	∅ 21-28.5 X 30	**1**	SPACER	ENTRETOISE DISTANZIALE	ABSTANDSTUECK DISCO ESPACIADOR
15	385365X1	∅ 20 - 37 X 5	**6**	WASHER	RONDELLE RONDELLA	SCHEIBE ARANDELA
16	502113D1	220 KG	**1**	WEIGHT	MASSE PESO	GEWICHT PESO
17	3011704X1	∅ 16.5 X 28 X	**1**	SPACER	ENTRETOISE DISTANZIALE	ABSTANDSTUECK DISCO ESPACIADOR
18	4281425M1	M16 X 170	**1**	SCREW	VIS VITE	SCHRAUBE TORNILLO
19	**3387270M92**	∅ 30 MM ◀▶ 171,5 MM	**1**	PIN HITCH	BROCHE PERNO ATTACCO	KUPPLUNGSBOLZEN PASADOR ENGAN.
20	4280784M91		**1**	CHAIN	CHAINE CATENA	KETTE CADENA
21	3382812M91		**1**	PIN	GOUPILLE COPPIGLIA	STIFT PASADOR
22*	**202-9220**	45 KG	**10**	WEIGHT	MASSE PESO	GEWICHT PESO

Weight Frame And Tow Pin
Support De Masses Et Broche
Gewichtrahmen Und Kupplungsbolzen
Telaio Pesante E Perno Di Rimorchio
Bastidor Para Pesas Y Perno De Remolque

60-5

1-WX15-012-B

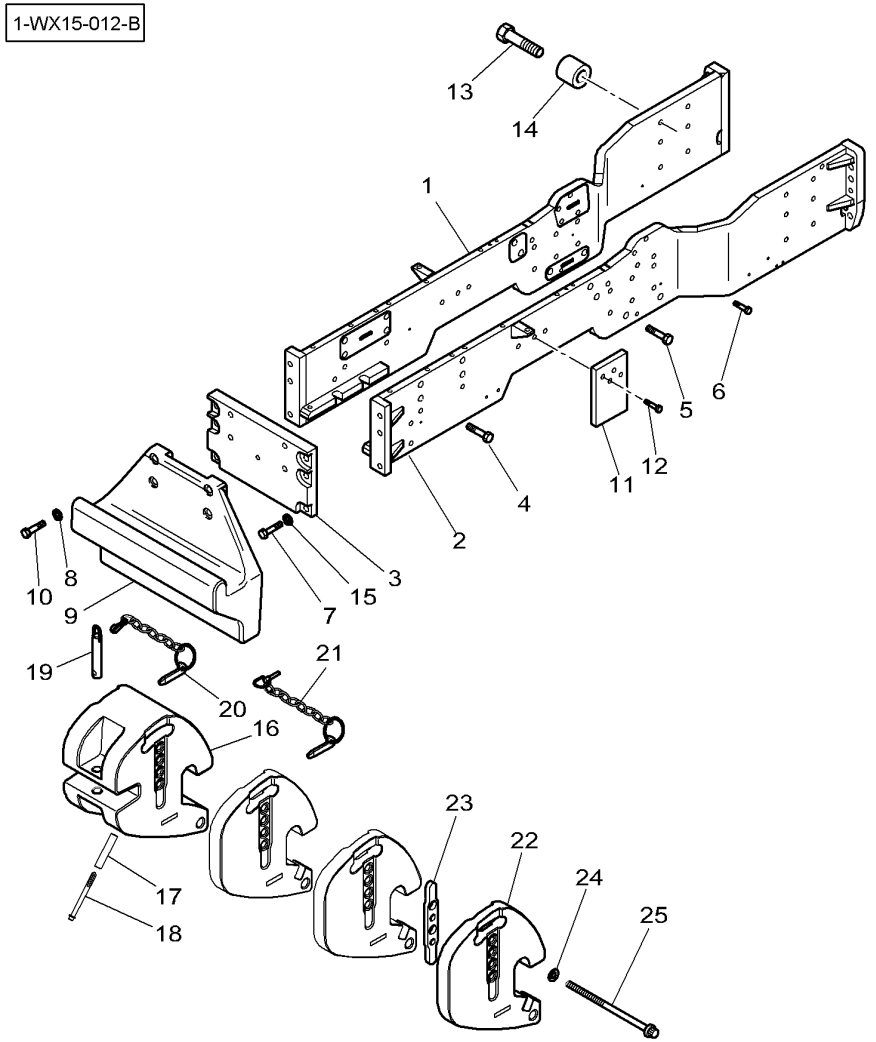

23	**202-9223**		**2**	PLATE	PLAQUE PIASTRA PLATTE PLATO
24	3011679X1	∅ 17 X 45 X 6 MM	**2**	SPACER	ENTRETOISE DISTANZIALE ABSTANDSTUECK DISCO ESPACIADOR
25*	3011705X1	➡| R179068 12P-M16 X 410	**2**	SCREW	VIS VITE SCHRAUBE TORNILLO
25*	3011681X1	➡ R179069 H-M16 X 410	**2**	SCREW	VIS VITE SCHRAUBE TORNILLO

[A] WITH FRONT LINKAGE 50000N
AVEC ATTELAGE AVANT 50000N
MIT VORDERE KUPPLUNG 50000N
CON ATTACCO ANTERIORE 50000N
CON ENGANCHE DELANTERO 50000N

Weight Frame And Tow Pin **Support De Masses Et Broche** **Gewichtrahmen Und Kupplungsbolzen** **Telaio Pesante E Perno Di Rimorchio** **Bastidor Para Pesas Y Perno De Remolque**	**60-10**	**With Front Lift** **Avec Relevage Avant** **Mit Frontkraftheber** **Con Sollevatore Frontale** **Con Elevador Delantera**

1-WX15-003-C

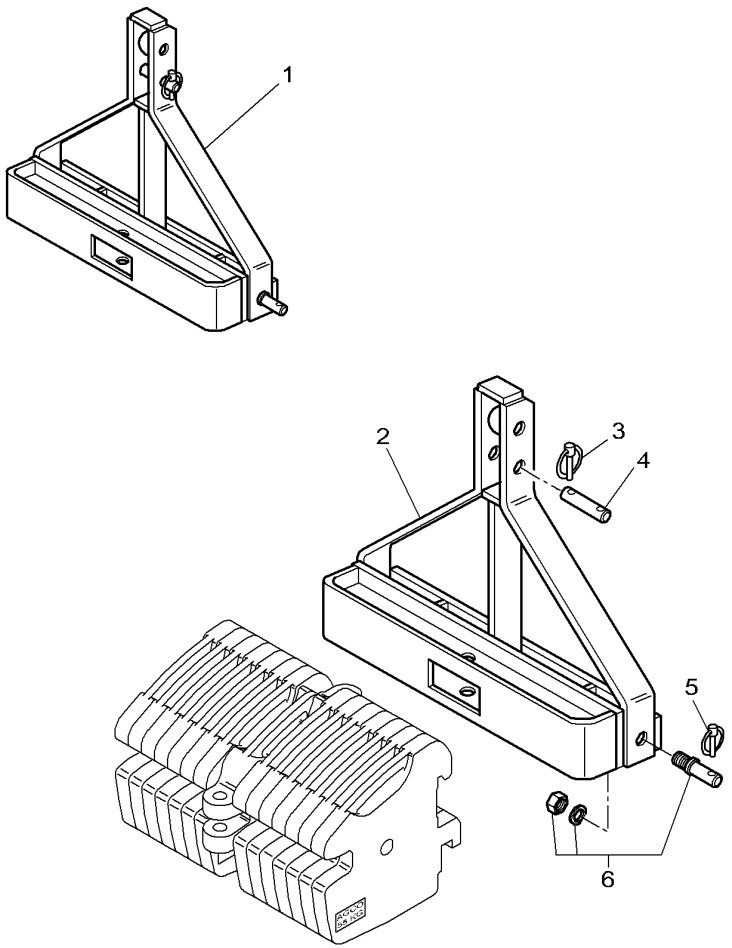

1	3786462M91		**1**	SUPPORT	SUPPORT SOPPORTO	TRAGER SOPORTE
2		1 ▶ REF. 1	**1**	SUPPORT	SUPPORT SOPPORTO	TRAGER SOPORTE
3	3782684M1	1	**1**	CLIP	PATTE D'ATTACHE FERMAGLIO	SCHELLE CLIP
4	3903839M1	1	**1**	CLEVIS PIN	AXE PERNO D'ATTACCO	SPLINTBOLZEN BULON CILINDRICO
5	3903841M1	1	**1**	CLIP	PATTE D'ATTACHE FERMAGLIO	SCHELLE CLIP
6	3903840M1	1	**1**	PITON	PITON FIX PITON	PITON FIX PITON

Weight Frame And Tow Pin
Support De Masses Et Broche
Gewichtrahmen Und Kupplungsbolzen
Telaio Pesante E Perno Di Rimorchio
Bastidor Para Pesas Y Perno De Remolque

60-15

1-WX15-020-A

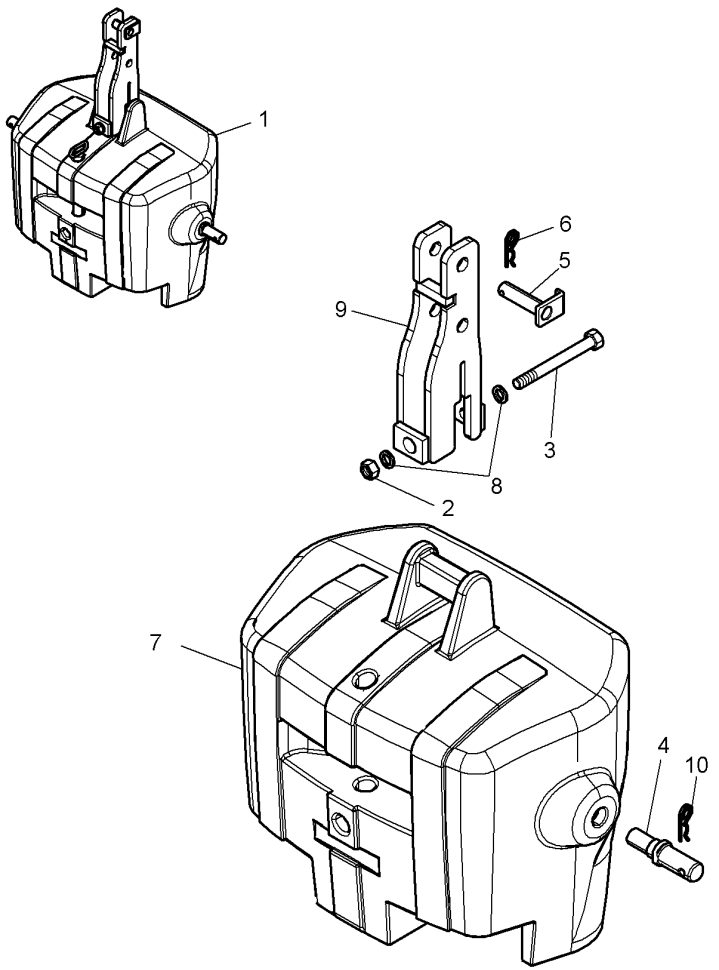

1	4286536M91	900KG	**1**	WEIGHT	MASSE PESO	GEWICHT PESO
2	3009746X1	1 M20	**1**	NUT	ECROU DADO	MUTTER TUERCA
3	3011273X1	1 M20 X 180	**1**	HEX. SOCK. SCREW	VIS TETE HEX VITE PARKER	ZYLINDERSCHRAUBE TORN.CAB.HUECA
4*	4290275M1	1 ∅ 28 MM	**2**	CLEVIS PIN	AXE PERNO D'ATTACCO	SPLINTBOLZEN BULON CILINDRICO
5*	4290274M1	1 ∅ 25.4 X 91	**1**	CLEVIS PIN	AXE PERNO D'ATTACCO	SPLINTBOLZEN BULON CILINDRICO
6*	4290279M1	1 ∅ 8 MM	**1**	PIN	GOUPILLE COPPIGLIA	STIFT PASADOR
7		1 Ref. 1 900KG	**1**	WEIGHT	MASSE PESO	GEWICHT PESO
8	390975X1	1 ∅ 20 MM	**2**	FLAT WASHER	RONDELLE PLATE RONDELLE PIANA	UNTERLEGSCHEIBEN ARANDELA PLANA
9*	4290273M1	1	**1**	SUPPORT	SUPPORT SOPPORTO	TRAGER SOPORTE
10	3792034M1	∅ 10,5	**2**	PIN	GOUPILLE COPPIGLIA	STIFT PASADOR

Belly Weight
Masse Ventrale
Grundgewicht
Zavorra Ventrale
Pesa Central

60-20

1-WJ07-011-A

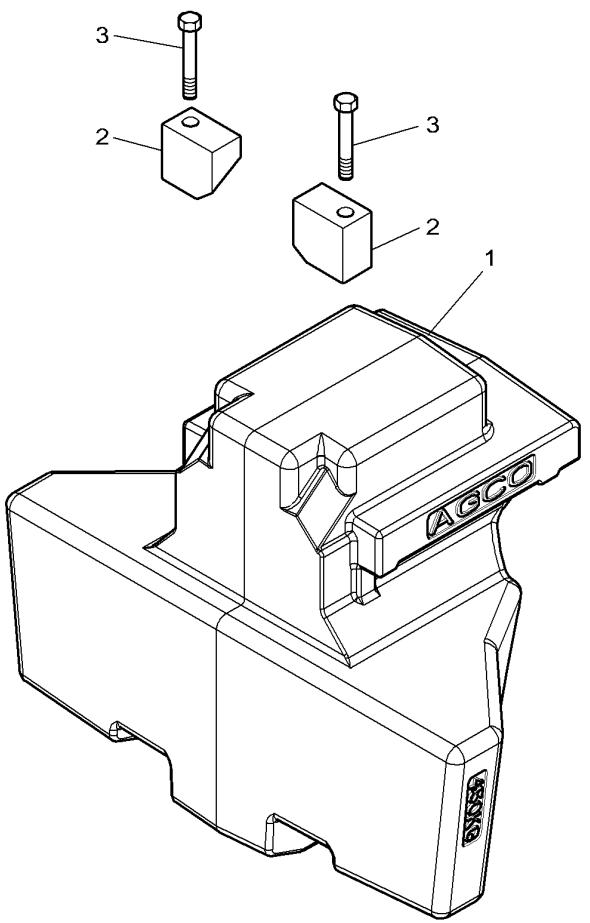

1	4280120M1	450 KGS	**1**	WEIGHT	MASSE PESO	GEWICHT PESO
2	3779514M2	▶	**1**	BRIDLE	BRIDE BRIGLIA	LASCHENSPANNBAND BRIDA
2	3779515M2	◀	**1**	BRIDLE	BRIDE BRIGLIA	LASCHENSPANNBAND BRIDA
3	3011422X1	M16 X 175	**2**	SCREW	VIS VITE	SCHRAUBE TORNILLO

Front Axle 4 Wheel Drive	Bracket
Essieu Avant 4 Roues Motrices	Support
Vorderachse 4 Rad Antrieb	Halter
Assale Anteriore 4 Ruedas Motriz	Supporto
Eje Delantero 4 Ruedas Motriz	Soporte

60-25

Front Axle Fixed
Pont Avant Fixe
Dtarr Vorderaschse
Assale Anteriore Fisso
Eje Delantero Fijo

1-WJ05-008-B

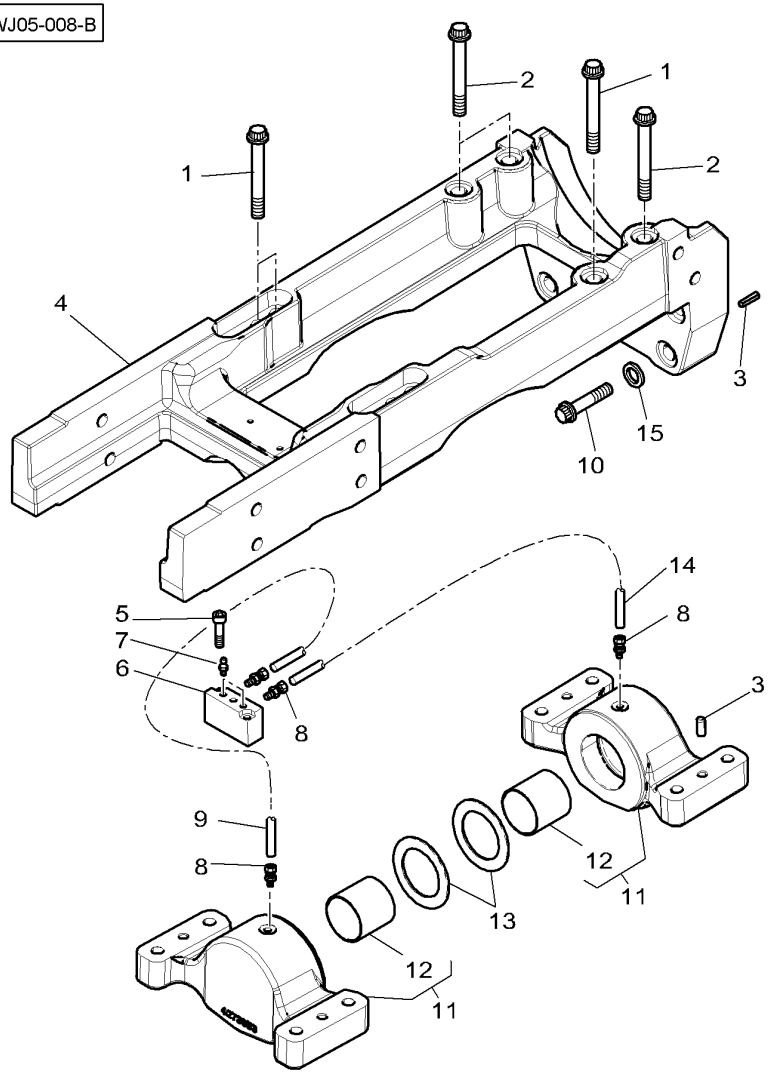

1	3011194X1	M20 X 150	**5**	SCREW	VIS VITE	SCHRAUBE TORNILLO
2	3010850X1	M20 X 170	**3**	SCREW	VIS VITE	SCHRAUBE TORNILLO
3	372081X1		**4**	DOWEL	PLOT SPINA	ZYLINDERSTIFT CENTRAJE
4	4273650M1		**1**	AXLE HOLDER	SUPPORT D'ESSIEU PORTA ASSALE	ACHSHALTER EJE DE APOYO
5	3004715X1	M8 X 60	**2**	SCREW	VIS VITE	SCHRAUBE TORNILLO
6	4280425M1		**1**	SUPPORT	SUPPORT SOPPORTO	TRAGER SOPORTE
7	339608X1		**2**	GREASE FITTING	GRAISSEUR INGRASSATORE	DRUCKSCHMIERKOPF ENGRASADOR
8	3002070X91		**4**	CONNECTOR	BORNE. MORSETTO.	DOPPELNIPPEL CONECTOR
9	4280413M1		**1**	TUBE	TUBE TUBO.	ROHR TUBO.
10	3010557X1	M20 X 100	**4**	SCREW METRIC	VIS METRIQUE VITE METRICA	SCHRAUBE METR TORNILLO METRICO
11*	4280122M12		**2**	BEARING CARRIER	PALIER CUSCINETTO SUPP.	LAGER GEHAEUSE COJINETE APOYO
12	3787722M2	11	**1**	BUSH	BAGUE BOCCOLA	RING CASQUILLO
13	4280123M2		**2**	THRUST WASHER	RONDELLE BUTEE RONDELLA REGGISP	ANLAUFSCHEIBE ARANDELA ACELER
14*	4280361M2		**1**	TUBE	TUBE TUBO.	ROHR TUBO.
15*	385365X1	M20	**4**	WASHER	RONDELLE RONDELLA	SCHEIBE ARANDELA

Front Axle 4 Wheel Drive **Essieu Avant 4 Roues Motrices** **Vorderachse 4 Rad Antrieb** **Assale Anteriore 4 Ruedas Motriz** **Eje Delantero 4 Ruedas Motriz**	**Bracket** **Support** **Halter** **Supporto** **Soporte**	**60-30**	**With Suspended Front Axle** **Avec Pont Avant Suspendu** **Mit Gefedert Vorderaschse** **Con Assale Anteriore Sospeso** **Con Eje Delantero Suspendido**

1-WJ05-007-B

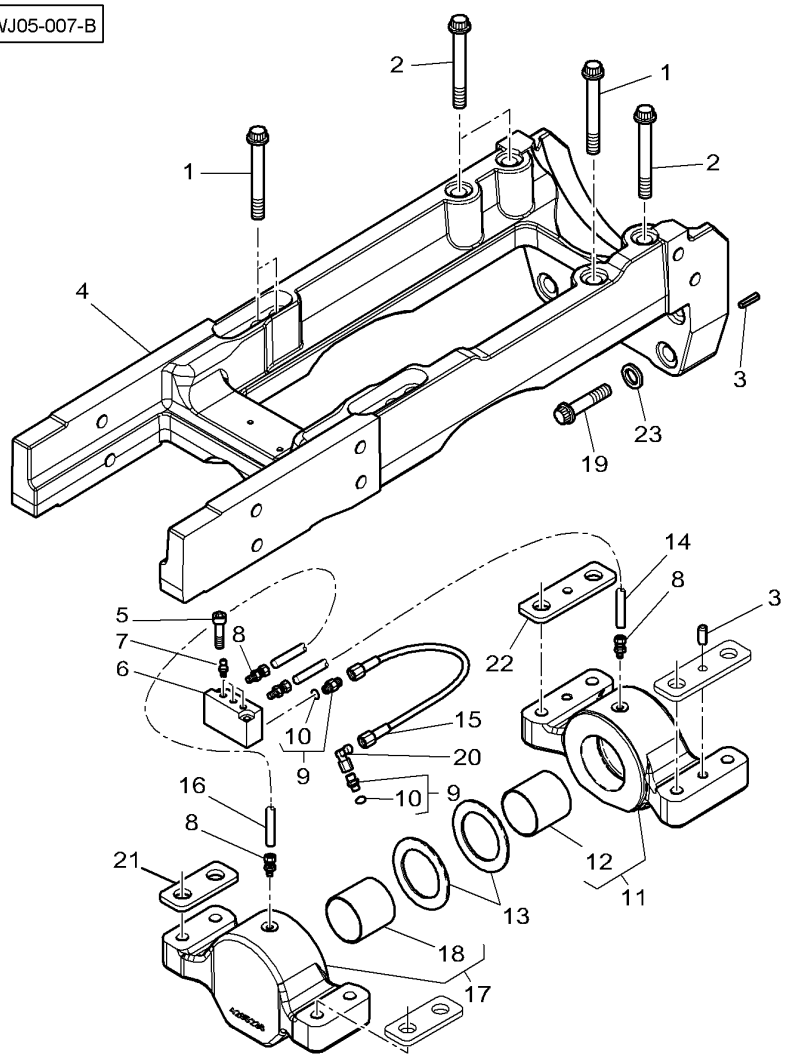

1	3011194X1	M20 X 150	**5**	SCREW	VIS VITE	SCHRAUBE TORNILLO
2	3010850X1	M20 X 170	**3**	SCREW	VIS VITE	SCHRAUBE TORNILLO
3	372081X1	◄► 1"	**4**	DOWEL	PLOT SPINA	ZYLINDERSTIFT CENTRAJE
3*	372082X1	◄► 1.25"	**2**	DOWEL	PLOT SPINA	ZYLINDERSTIFT CENTRAJE
4	4273650M1		**1**	AXLE HOLDER	SUPPORT D'ESSIEU PORTA ASSALE	ACHSHALTER EJE DE APOYO
5	3004715X1	M8 X 60	**2**	SCREW	VIS VITE	SCHRAUBE TORNILLO
6	4280425M1		**1**	SUPPORT	SUPPORT SOPPORTO	TRAGER SOPORTE
7	339608X1		**3**	GREASE FITTING	GRAISSEUR INGRASSATORE	DRUCKSCHMIERKOPF ENGRASADOR
8	3002070X91		**4**	CONNECTOR	BORNE. MORSETTO.	DOPPELNIPPEL CONECTOR
9	338906X91	M10X1 6L	**2**	UNION	RACCORD RACCORDO	VERSCHRAUBUNG RACOR
10	338760X1	9	**1**	O RING	JOINT TORIQUE GIUNTO DI TENUTA	O-RING JUNTA TOROIDAL
11*	4280122M12		**1**	BEARING CARRIER	PALIER CUSCINETTO SUPP.	LAGER GEHAEUSE COJINETE APOYO
12	3787722M2	11	**1**	BUSH	BAGUE BOCCOLA	RING CASQUILLO
13	4280123M2		**2**	THRUST WASHER	RONDELLE BUTEE RONDELLA REGGISP	ANLAUFSCHEIBE ARANDELA ACELER
14*	4280361M2		**1**	TUBE	TUBE TUBO.	ROHR TUBO.
15	4280363M2		**1**	HYDR. HOSE	FLEXIBLE TUBOFLEX IDRAUL	HYDR. SCHLAUCH TUBO HIDRAULICO
16*	4280362M2		**1**	TUBE	TUBE TUBO.	ROHR TUBO.
17	4285237M11		**1**	AXLE CARRIER	PALIER D'ESSIEU SUPPORTO ASSALE	ACHSTRAEGER PORTADOR DEL EJE
18	3787722M2	17	**1**	BUSH	BAGUE BOCCOLA	RING CASQUILLO
19	3010557X1	M20 X 100	**4**	SCREW METRIC	VIS METRIQUE VITE METRICA	SCHRAUBE METR TORNILLO METRICO
20	3011771X91		**1**	UNION	RACCORD RACCORDO	VERSCHRAUBUNG RACOR
21*	4287653M1	⧗ 8 MM	**2**	CHOCK	CALE PASSACAVO	UNTERLEG-KEIL CALZA
22*	4287654M1	⧗ 8 MM	**2**	CHOCK	CALE PASSACAVO	UNTERLEG-KEIL CALZA
23*	385365X1	M20	**4**	WASHER	RONDELLE RONDELLA	SCHEIBE ARANDELA

Front Axle 4 Wheel Drive Essieu Avant 4 Roues Motrices Vorderachse-4wd Assale Anteriore 4 Ruote Motrici Doble Traccion De Eje Frontal	Differential Lock Mechanism Blocage De Differentiel Diff -Sperre Comando Bloccaggio Differenziale Mecanismo Bloqueo Diferencial	**60-35**	

1-WK12-007-B

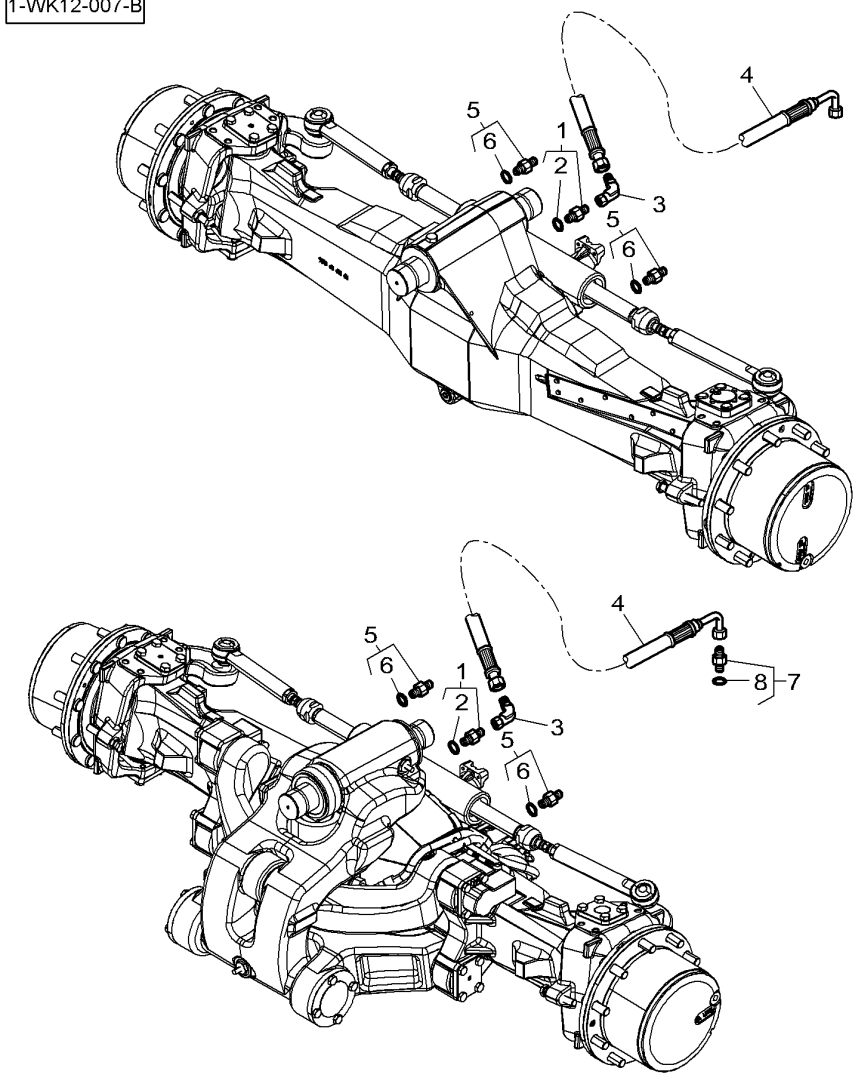

1	3011047X91	M14X1.5 10L	**1**	UNION	RACCORD RACCORDO	VERSCHRAUBUNG RACOR
2*	F916961020190	1	**1**	O RING	JOINT TORIQUE GIUNTO DI TENUTA	O-RING JUNTA TOROIDAL
3	4280507M1		**1**	UNION	RACCORD RACCORDO	VERSCHRAUBUNG RACOR
4	4276146M2	◄► 3700 MM	**1**	HYDR. HOSE	FLEXIBLE TUBOFLEX IDRAUL	HYDR. SCHLAUCH TUBO HIDRAULICO
5*	3011246X91	M18X1.5	**2**	UNION	RACCORD RACCORDO	VERSCHRAUBUNG RACOR
6*	3015163X1	5	**1**	O RING	JOINT TORIQUE GIUNTO DI TENUTA	O-RING JUNTA TOROIDAL
7*	3011619X91		**1**	UNION	RACCORD RACCORDO	VERSCHRAUBUNG RACOR
8*	338762X1	7	**1**	SEAL	JOINT ETANCHEITE GIUNTO ROTONDO	DICHTRING JUNTA REDONDA

Guard And Transmission Shaft
Garant Et Arbre De Transmission
Schutz Und Allradantriebswelle
Riparo E Albero Trasmissione
Defensa Y Arbol De Transmision

60-40

➡| **R292043**

1-WK11-009-A

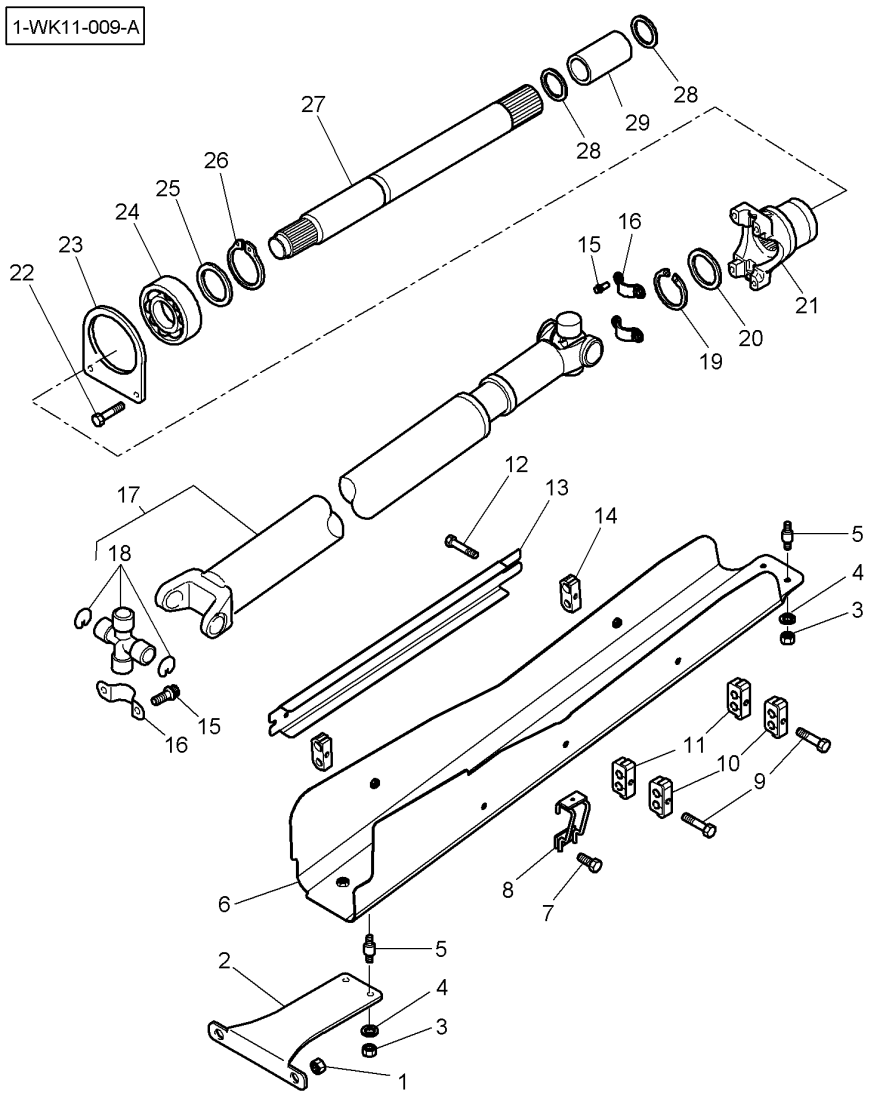

1	3010349X1	M14	**2**	NUT	ECROU DADO	MUTTER TUERCA
2	4280117M1		**1**	SUPPORT	SUPPORT SOPPORTO	TRAGER SOPORTE
3	339169X1	M8	**4**	NUT	ECROU DADO	MUTTER TUERCA
4	390972X1		**4**	FLAT WASHER	RONDELLE PLATE RONDELLE PIANA	UNTERLEGSCHEIBEN ARANDELA PLANA
5	658081M2		**4**	DAMPER	AMORTISSEUR AMMORTIZZATORE.	DAEMPFER VALV.REGULADORA
6*	4280118M1		**1**	COWL	GARANT CAPPOTTATURA	AUFSATZ CAPERUZA
7	3009192X1	M8 X 16	**1**	SCREW METRIC	VIS METRIQUE VITE METRICA	SCHRAUBE METR TORNILLO METRICO
8	4285302M1		**1**	GUIDE	GUIDE GUIDA	FUEHRUNG GUIA
9	390246X1	[A] M8 X 70	**2**	HEX. SOCK. SCREW	VIS TETE HEX VITE PARKER	ZYLINDERSCHRAUBE TORN.CAB.HUECA
10	3781937M1	[A] ∅ 16-18	**2**	BRIDLE	BRIDE BRIGLIA	LASCHENSPANNBAND BRIDA
11	3781908M1	[A]	**2**	BRIDLE	BRIDE BRIGLIA	LASCHENSPANNBAND BRIDA
12	3009198X1	M8 X 45	**2**	PLOUGH BOLT	VIS A EMBASE VITE TESTA TONDA	SENKSCHLOSSSCHRB TORNILLO ALOJ C
13	3789475M1		**1**	COWL	GARANT CAPPOTTATURA	AUFSATZ CAPERUZA
14*	3789441M1	∅ 13.5-18	**4**	BRIDLE	BRIDE BRIGLIA	LASCHENSPANNBAND BRIDA
15	4277509M1		**8**	SCREW	VIS VITE	SCHRAUBE TORNILLO
16	4277510M1		**4**	BRIDLE	BRIDE BRIGLIA	LASCHENSPANNBAND BRIDA
17	4280128M91		**1**	UNIVERSAL JOINT	CARDAN GIUNTO UNIVERSAL	KARDANGELENK JUNTA UNIVERSAL
18	3907427M91	17	**1**	SPIDER	CROISILLON CROCIERA CARDAN.	KREUZSTUECK CRUCETA
19	1441786X1		**1**	CIRCLIP	CIRCLIP ANNELLO ELASTICO	SEEGERING GRAPA CIRCULAR
20	822100320060		**1**	RING	ANNEAU ANELLO	RING. ANILLO
21	4280129M1		**1**	CLEVIS	CHAPE GANCIO D'ATTACCO	GABELSTUECK GANCHO SEGURI.
22	392892X1	M10 X 35	**2**	HEX. SOCK. SCREW	VIS TETE HEX VITE PARKER	ZYLINDERSCHRAUBE TORN.CAB.HUECA
23	3789032M1		**1**	BRIDLE	BRIDE BRIGLIA	LASCHENSPANNBAND BRIDA
24	339602X1		**1**	BEAR. 6212 2RS	RLT 6212 2RS CUSC. 6212 2RS	LAGER 6212 2RS RODA. 6212 2RS
25	X534539346000		**1**	BACKUP RING	CONTRE BAGUE ANELLO APPOGGIO	STUETZRING ANILLA SOPORTE
26	339605X1		**1**	CIRCLIP	CIRCLIP ANNELLO ELASTICO	SEEGERING GRAPA CIRCULAR

Guard And Transmission Shaft
Garant Et Arbre De Transmission
Schutz Und Allradantriebswelle
Riparo E Albero Trasmissione
Defensa Y Arbol De Transmision

60-40

➡ **R292043**

1-WK11-009-A

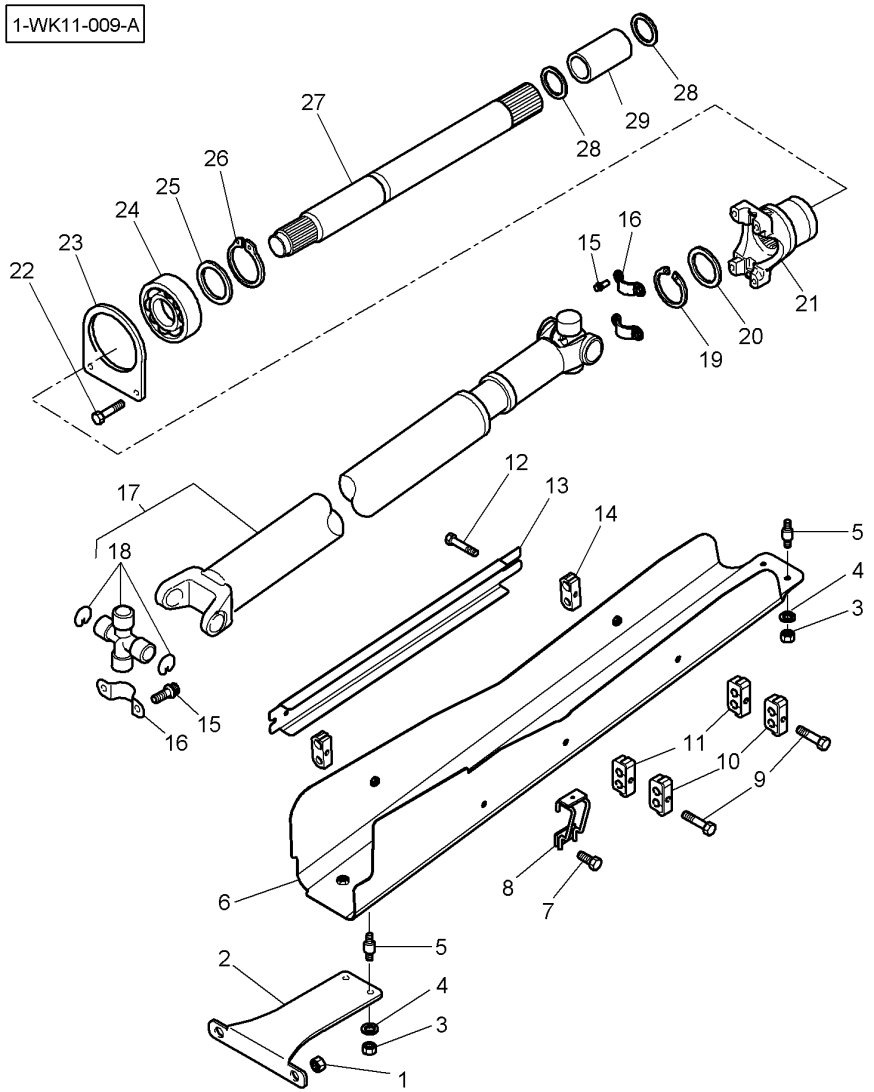

27	903100320010	**1**	SHAFT	ARBRE ALBERO	WELLE ARBOL
28	**3008359X1**	**2**	O RING	JOINT TORIQUE GIUNTO DI TENUTA	O-RING JUNTA TOROIDAL
29	916101320100	**1**	BUSH	BAGUE BOCCOLA	RING CASQUILLO

[A] WITH FRONT AXLE SUSPENDED
AVEC PONT AVANT SUSPENDU
MIT HAENGE VORDERASCHSE
CON ASSALE ANTERIORE SOSPESO
CON EJE DELANTERO SUSPENDIDO

Front Axle 4 Wheel Drive	Clutch	60-45	
Essieu Avant 4 Roues Motrices	Embrayage		
Allradantrieb Vorderachse	Kupplung		
Assale Anteriore	Frizione		
Eje Delantero 4 Ruedas Motrices	Embrague		

1-WK15-011-A

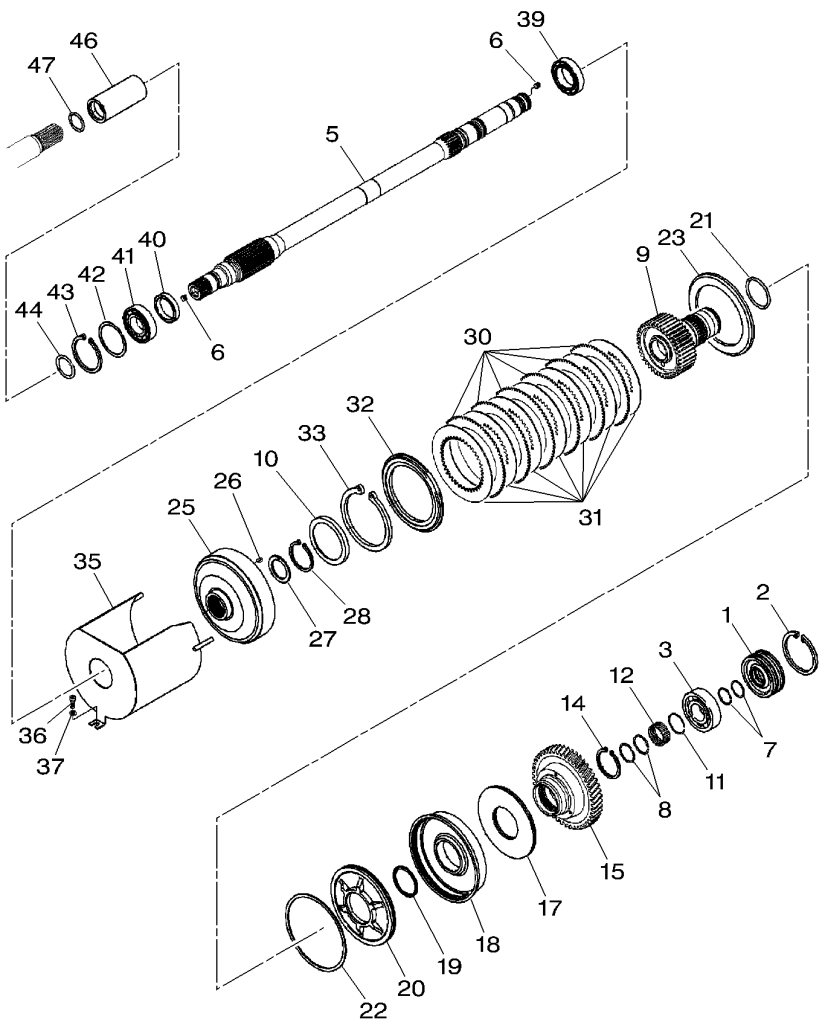

1	916100320080		**1**	COVER	COUVERCLE COPERCHIO	ABDECKUNG. CUBIERTA
2	X530108346000		**1**	CIRCLIP	CIRCLIP ANNELLO ELASTICO	SEEGERING GRAPA CIRCULAR
3	X620414500001		**1**	ROLLER BEARING	ROULEMENT GALETS CUSCINETTO RULLI	ROLLENLAGER COJINETE RODILLO
5	916100320070		**1**	SHAFT	ARBRE ALBERO	WELLE ARBOL
6	X412823006000	M10 X 10	**2**	GRUB SCREW	VIS SANS TETE VITE SENZA TESTA	GEWINDESTIFT TORNILLO SIN CAB
7	X560703600000		**2**	PLAIN COMPR.RING	SEGMENT RECTANG. PLAIN COMPR.RING	RECHTECKRING PLAIN COMPR.RING
8	X560703700000		**2**	PLAIN COMPR.RING	SEGMENT RECTANG. PLAIN COMPR.RING	RECHTECKRING PLAIN COMPR.RING
9	916101320151		**1**	DISC CARRIER	PORTE DISQUE PORTADISCO	LAMELLENTRAEGER PORTALAMINAS
10	916100410060		**1**	SHEET METAL	CARROSSERIE CARROZZERIA	BLECH HOJA METALICA
11	X533813400000	∅ 47 X 1,5	**1**	SNAPRING	SEGMENT ARRET ANELLO SIEGER	SPRENGRING ANILLA RETENCION
12	X638525149000	42 X 47 X 17	**1**	NEEDLE CAGE	CAGE A AIGUILLES PORTAGHI	NADELKAEFIG JUALA DE AGUJA
14	X530216846000	∅ 63 X 3	**1**	CIRCLIP	CIRCLIP ANNELLO ELASTICO	SEEGERING GRAPA CIRCULAR
15		👁 60-50 No 4	**1**	PINION	PIGNON PIGNONE	RITZEL PINON
17	G916100320010		**1**	KIT, SPRING	JEU RESSORTS KIT MOLLA	FEDERNSATZ KIT MUELLE
18	916100320161		**1**	PISTON	PISTON PISTONE	KOLBEN PISTON
19	916100320170		**1**	SUPPORT COVER	COUVERC. SUPPORT SUPPORT COVER	ABSTUETZDECKEL SUPPORT COVER
20	916101320120		**1**	DISC	DISQUE DISCO	SCHEIBE DISCO
21	X548949815000	∅ 67 X 2,5	**1**	O RING	JOINT TORIQUE GIUNTO DI TENUTA	O-RING JUNTA TOROIDAL
22	916100320110		**1**	OIL SEAL	BAGUE ETANCHEITE BOCCOLA PARAOLIO	OELDICHTRING BUJE RETENACEITE
23	916100320131		**1**	PLATE	PLAQUE PIASTRA	PLATTE PLATO
25	916100320010		**1**	CLUTCH HOUSING	COUV.CART.EMBRA. CLUTCH HOUSING	KUPPLUNGSGLOCKE CLUTCH HOUSING
26	X500615046000	4 X 10	**1**	ROLL PIN	GOUPILLE ROULEE SPINA ELASTICA	SPANNHUELSE PASADOR ELASTICO
27	916100320040		**1**	DISC	DISQUE DISCO	SCHEIBE DISCO
28	X531206800000	∅ 65 X 2,5	**1**	CIRCLIP	CIRCLIP ANNELLO ELASTICO	SEEGERING GRAPA CIRCULAR
30	822100010130		**6**	EXTERNAL DISC	DISQUE EXTERIEUR DISCO ESTERNO	AUSSENLAMELLE DISCO EXTERIOR
31	822100010120		**7**	INTERNAL DISC	DISQUE INTERIEUR DISCO INTERNO	INNENLAMELLE DISCO INTERIOR

Front Axle 4 Wheel Drive	Clutch	60-45	
Essieu Avant 4 Roues Motrices	Embrayage		
Allradantrieb Vorderachse	Kupplung		
Assale Anteriore	Frizione		
Eje Delantero 4 Ruedas Motrices	Embrague		

1-WK15-011-A

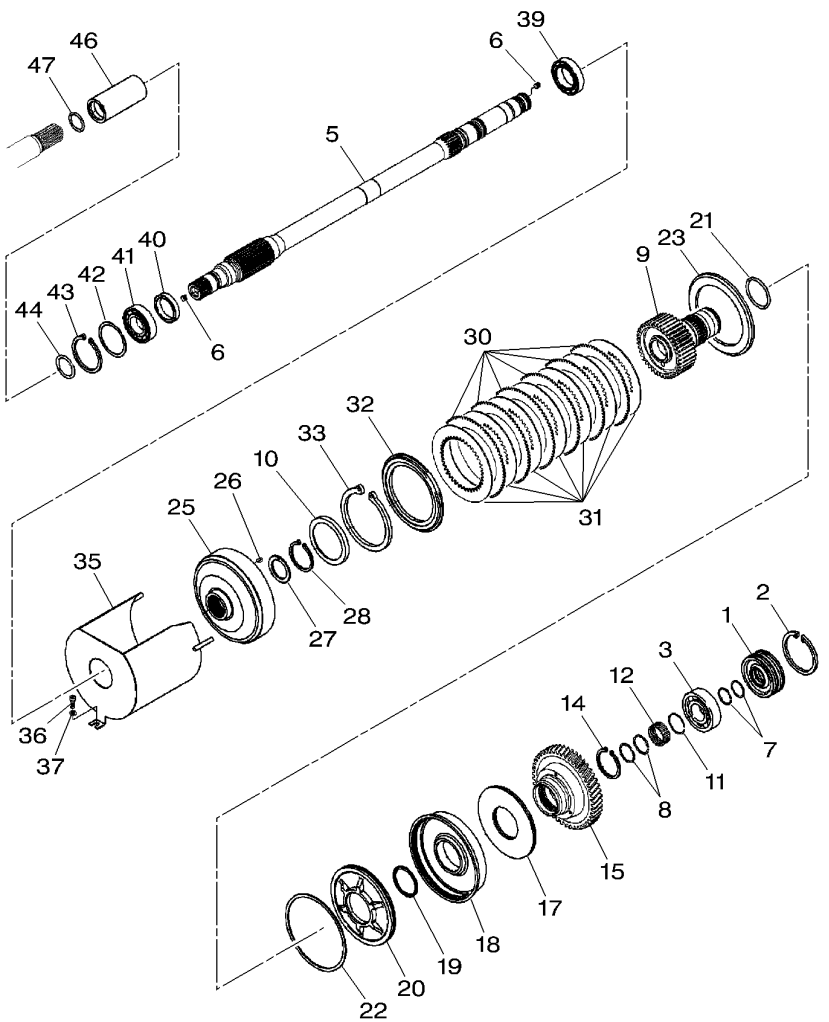

32	916100320140		**1**	PLATE	PLAQUE PIASTRA	PLATTE PLATO
33	X530209700000	∅ 130 X 4	**1**	CIRCLIP	CIRCLIP ANNELLO ELASTICO	SEEGERING GRAPA CIRCULAR
35	H916100320010		**1**	PROTECTOR	PROTECTEUR PROTETTORE	SCHUTZ PROTECTOR
36	X487526841000	M8 X 16	**1**	SCREW	VIS VITE	SCHRAUBE TORNILLO
37	X450006308000		**1**	WASHER	RONDELLE RONDELLA	SCHEIBE ARANDELA
39	X606705900000		**1**	BALL BEARING	ROULEMENT BILLES CUSCINETTO SFERE	KUGELLAGER COJINETE DE BOLA
40	X550108900000	50 X 65 X 8	**1**	SHAFT SEAL	ETANCHEITE ARBRE TENUTA ALBERO	WELLENDICHTRING SELLO DE EJE
41	H312100200100		**1**	BALL BEARING	ROULEMENT BILLES CUSCINETTO SFERE	KUGELLAGER COJINETE DE BOLA
42	015149020035	⧗ 1,00 MM	**1**	SHIM	CALE REGLAGE SPESSORE	AUSGLEICHSCHEIBE CALCE
42	015149020030	⧗ 0,10 MM	**X**	SHIM	CALE REGLAGE SPESSORE	AUSGLEICHSCHEIBE CALCE
42	015149020036	⧗ 0,15 MM	**X**	SHIM	CALE REGLAGE SPESSORE	AUSGLEICHSCHEIBE CALCE
42	015149020031	⧗ 0,20 MM	**X**	SHIM	CALE REGLAGE SPESSORE	AUSGLEICHSCHEIBE CALCE
42	015149020032	⧗ 0,40 MM	**X**	SHIM	CALE REGLAGE SPESSORE	AUSGLEICHSCHEIBE CALCE
43	X530107446000	∅ 80 X 2,5	**1**	CIRCLIP	CIRCLIP ANNELLO ELASTICO	SEEGERING GRAPA CIRCULAR
44	X548901801000	∅ 36,2 X 3	**1**	O RING	JOINT TORIQUE GIUNTO DI TENUTA	O-RING JUNTA TOROIDAL
46	916101320100		**1**	BUSH	BAGUE BOCCOLA	RING CASQUILLO
47	X548901801000	∅ 36,2 X 3	**1**	O RING	JOINT TORIQUE GIUNTO DI TENUTA	O-RING JUNTA TOROIDAL

Front Axle 4 Wheel Drive	Clutch
Essieu Avant 4 Roues Motrices	Embrayage
Allradantrieb Vorderachse	Kupplung
Assale Anteriore	Frizione
Eje Delantero 4 Ruedas Motrices	Embrague

60-50

1-WK15-012-A

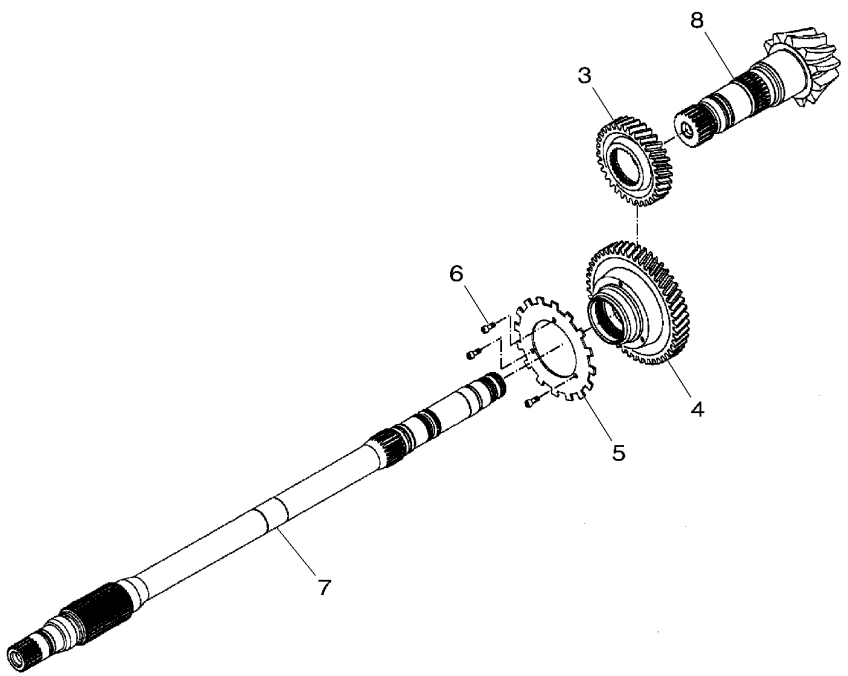

3 *	903101380011		32	**1**	SPUR GEAR	ENGRENAGE DROIT INGRANAGGIO DIR. STIRNRAD RUEDA DE DIENTES
4 *	903101380021			**1**	SPUR GEAR	ENGRENAGE DROIT INGRANAGGIO DIR. STIRNRAD RUEDA DE DIENTES
5	916100380100			**1**	GEAR	ENGRENAGE INGRANAGGIO ZAHNRAD ENGRANAJE
6	X485004700000		M16 X 10	**3**	HEX. SOCK. SCREW	VIS TETE HEX VITE PARKER ZYLINDERSCHRAUBE TORN.CAB.HUECA
7			60-45 No 5	**1**	SHAFT	ARBRE ALBERO WELLE ARBOL
8			30-50 No 18	**1**	PINION SHAFT	ARBRE DENTE ALBERO PIGNONE RITZELWELLE EJE PINON

Front Axle 4 Wheel Drive
Essieu Avant 4 Roues Motrices
Vorderachse Allradantrieb
Assale Anteriore 4 Ruote Motrici
Eje Delantero 4 Ruedas Motrices

60-55

1-WK01-006-B

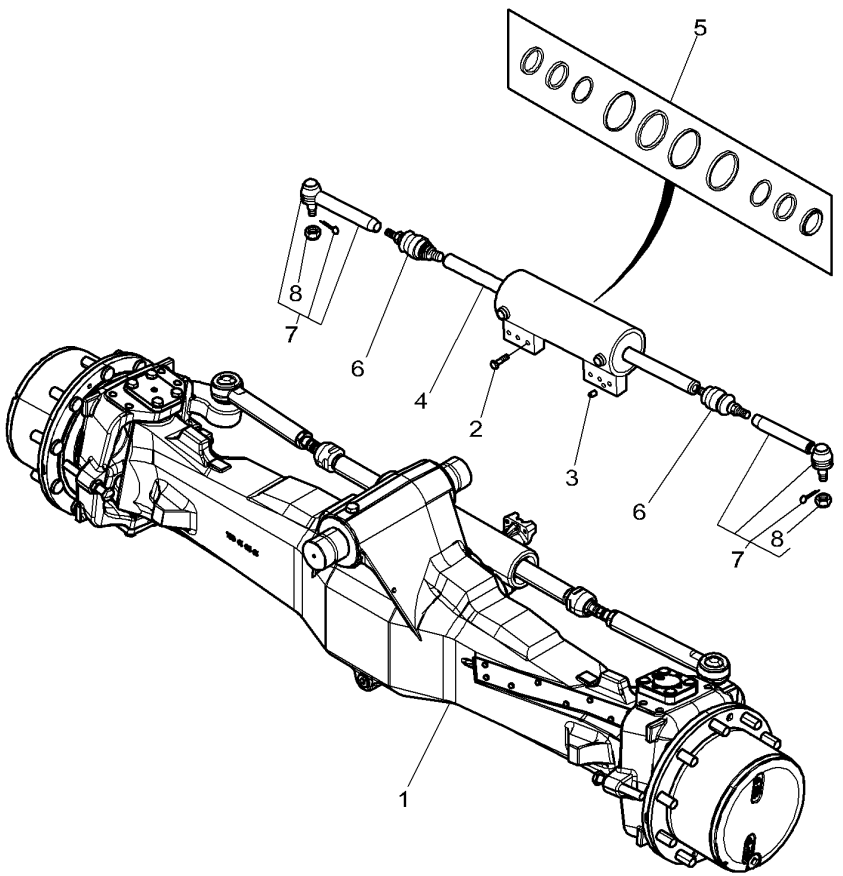

1	*	3766280M93	TYPE AG 280	**1**	FRONT LIVE AXLE	PONT AVANT ASSALE-ANTERIORE	ALLRADACHSE VORN EJE MANDO DELANT
2		3765902M1		**6**	SCREW	VIS VITE	SCHRAUBE TORNILLO
3		3764700M1		**1**	DOWEL	PLOT SPINA	ZYLINDERSTIFT CENTRAJE
4		3765844M91	[A]	**1**	STEERING CYL	VERIN DIRECTION CILINDRO STERZO	LENKZYLINDER CILINDRO DIRECC
5		3765904M91	4	**1**	KIT, SEAL	JEU ETANCHEITE KIT TENUTA	DICHTRINGSATZ RETENES JUEGO
6		3765843M91		**2**	BALL JOINT	ROTULE SPHERIQUE SNODO A SFERA	KUGELGELENK UNION ROTULA
7		3765842M91		**2**	TOGGLE	ROTULE ROTULA	GELENKZAPFEN ROTULA
8		3907688M1	7 M27 x 1.5	**1**	NUT	ECROU DADO	MUTTER TUERCA

[A] NOT DETAILLED
PAS DETAILLE
NICHT VERKAUFT
PASSO DETTAGLIATO
NO DETALLADO

Front Axle 4 Wheel Drive
Essieu Avant 4 Roues Motrices
Vorderachse Allradantrieb
Assale Anteriore 4 Ruote Motrici
Eje Delantero 4 Ruedas Motrices

60-60

With Suspended Front Axle
Avec Pont Avant Suspendu
Mit Gefedert Vorderaschse
Con Assale Anteriore Sospeso
Con Eje Delantero Suspendido

1-WK01-009-A

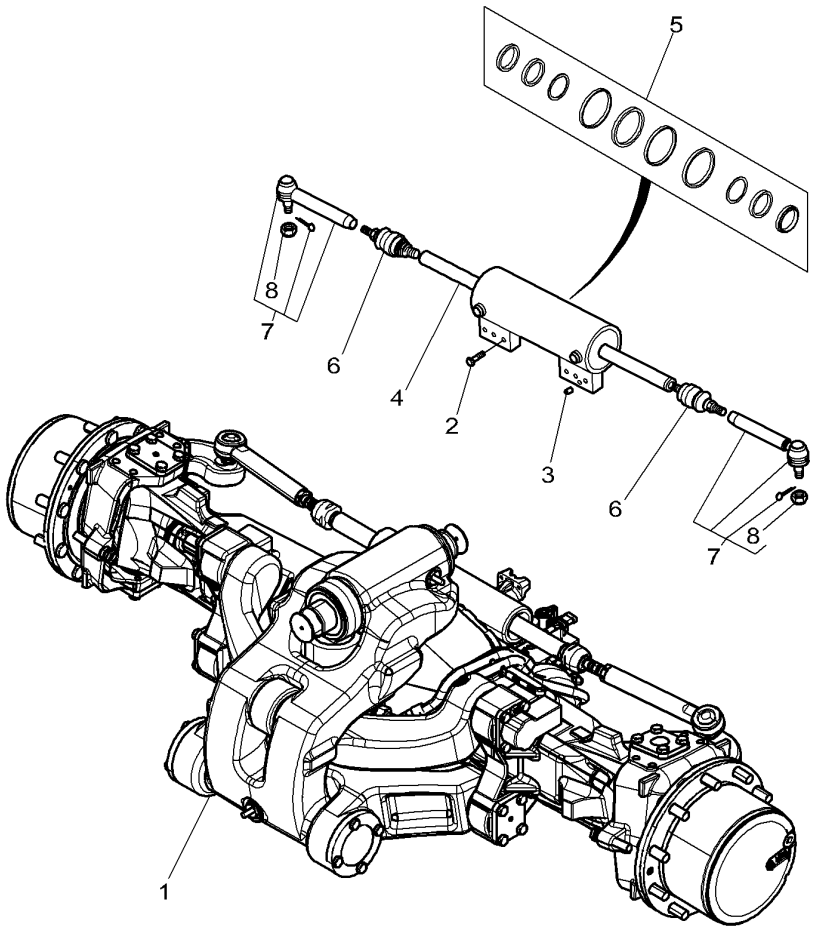

1	4273651M93	TYPE 760/601	**1**	FRONT LIVE AXLE	PONT AVANT ASSALE-ANTERIORE	ALLRADACHSE VORN EJE MANDO DELANT
2	3765902M1		**6**	SCREW	VIS VITE	SCHRAUBE TORNILLO
3	3764700M1		**1**	DOWEL	PLOT SPINA	ZYLINDERSTIFT CENTRAJE
4	3765844M91	[A]	**1**	STEERING CYL	VERIN DIRECTION CILINDRO STERZO	LENKZYLINDER CILINDRO DIRECC
5	3765904M91	4	**1**	KIT, SEAL	JEU ETANCHEITE KIT TENUTA	DICHTRINGSATZ RETENES JUEGO
6	3765843M91		**2**	BALL JOINT	ROTULE SPHERIQUE SNODO A SFERA	KUGELGELENK UNION ROTULA
7	3765842M91		**2**	TOGGLE	ROTULE ROTULA	GELENKZAPFEN ROTULA
8	3907688M1	7 M27 x 1.5	**1**	NUT	ECROU DADO	MUTTER TUERCA

[A] NOT DETAILLED
PAS DETAILLE
NICHT VERKAUFT
PASSO DETTAGLIATO
NO DETALLADO

Guard And Transmission Shaft
Garant Et Arbre De Transmission
Schutz Und Allradantriebswelle
Riparo E Albero Trasmissione
Defensa Y Arbol De Transmision

60-65

With Fixed Front Axle From R292044
Avec Pont Avant Fixe A Partir Du R292044
Mit Dtaar Vorderaschse Ab R292044
Con Assale Anteriore Fisso Dalla R292044
Con Eje Delantero Fixe A Partir Del R292044

1-WK11-018-A

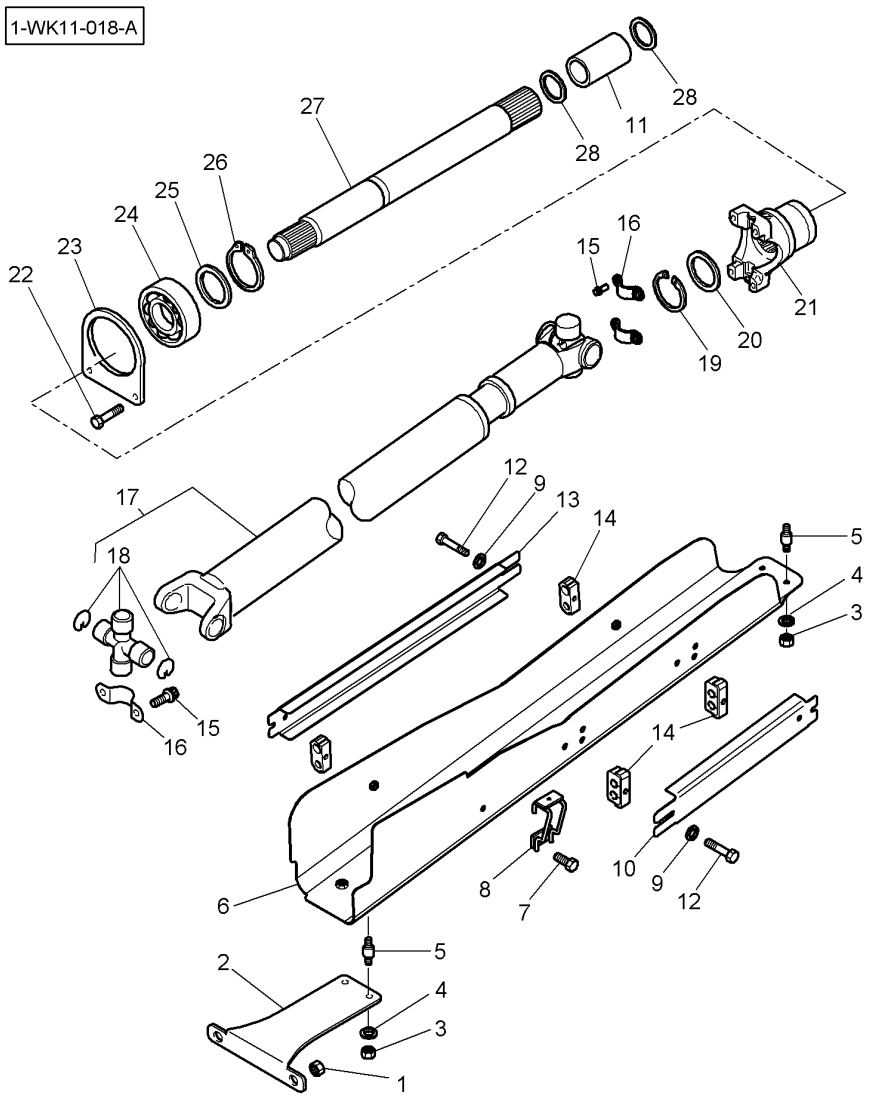

1	3010349X1	M14	**2**	NUT	ECROU DADO	MUTTER TUERCA
2	4280117M1	➡| R256025	**1**	SUPPORT	SUPPORT SOPPORTO	TRAGER SOPORTE
2*	4288418M1	➡ R256026	**1**	SUPPORT	SUPPORT SOPPORTO	TRAGER SOPORTE
3	339169X1	M8	**4**	NUT	ECROU DADO	MUTTER TUERCA
4	390972X1		**4**	FLAT WASHER	RONDELLE PLATE RONDELLE PIANA	UNTERLEGSCHEIBEN ARANDELA PLANA
5	658081M2		**4**	DAMPER	AMORTISSEUR AMMORTIZZATORE.	DAEMPFER VALV.REGULADORA
6	4280118M4		**1**	COWL	GARANT CAPPOTTATURA	AUFSATZ CAPERUZA
7	3009192X1	M8 X 16	**1**	SCREW METRIC	VIS METRIQUE VITE METRICA	SCHRAUBE METR TORNILLO METRICO
8	4285302M1		**1**	GUIDE	GUIDE GUIDA	FUEHRUNG GUIA
9*	385365X1		**4**	WASHER	RONDELLE RONDELLA	SCHEIBE ARANDELA
10*	4271023M3		**1**	COWL	GARANT CAPPOTTATURA	AUFSATZ CAPERUZA
11	916101320100		**1**	BUSH	BAGUE BOCCOLA	RING CASQUILLO
12*	3009198X1	M8 X 45	**4**	PLOUGH BOLT	VIS A EMBASE VITE TESTA TONDA	SENKSCHLOSSSCHRB TORNILLO ALOJ C
13	3789475M1		**1**	COWL	GARANT CAPPOTTATURA	AUFSATZ CAPERUZA
14	3789441M1	∅ 13.5-18	**4**	BRIDLE	BRIDE BRIGLIA	LASCHENSPANNBAND BRIDA
15	4277509M1		**8**	SCREW	VIS VITE	SCHRAUBE TORNILLO
16	4277510M1		**4**	BRIDLE	BRIDE BRIGLIA	LASCHENSPANNBAND BRIDA
17	4280128M91		**1**	UNIVERSAL JOINT	CARDAN GIUNTO UNIVERSAL	KARDANGELENK JUNTA UNIVERSAL
18	3907427M91	17	**1**	SPIDER	CROISILLON CROCIERA CARDAN.	KREUZSTUECK CRUCETA
19	1441786X1		**1**	CIRCLIP	CIRCLIP ANNELLO ELASTICO	SEEGERING GRAPA CIRCULAR
20	822100320060		**1**	RING	ANNEAU ANELLO	RING. ANILLO
21	4280129M1		**1**	CLEVIS	CHAPE GANCIO D'ATTACCO	GABELSTUECK GANCHO SEGURI.
22	392892X1	M10 X 35	**2**	HEX. SOCK. SCREW	VIS TETE HEX VITE PARKER	ZYLINDERSCHRAUBE TORN.CAB.HUECA
23	3789032M1		**1**	BRIDLE	BRIDE BRIGLIA	LASCHENSPANNBAND BRIDA
24	339602X1		**1**	BEAR. 6212 2RS	RLT 6212 2RS CUSC. 6212 2RS	LAGER 6212 2RS RODA. 6212 2RS
25	X534539346000		**1**	BACKUP RING	CONTRE BAGUE ANELLO APPOGGIO	STUETZRING ANILLA SOPORTE

Guard And Transmission Shaft
Garant Et Arbre De Transmission
Schutz Und Allradantriebswelle
Riparo E Albero Trasmissione
Defensa Y Arbol De Transmision

60-65

With Fixed Front Axle From R292044
Avec Pont Avant Fixe A Partir Du R292044
Mit Dtaar Vorderaschse Ab R292044
Con Assale Anteriore Fisso Dalla R292044
Con Eje Delantero Fixe A Partir Del R292044

1-WK11-018-A

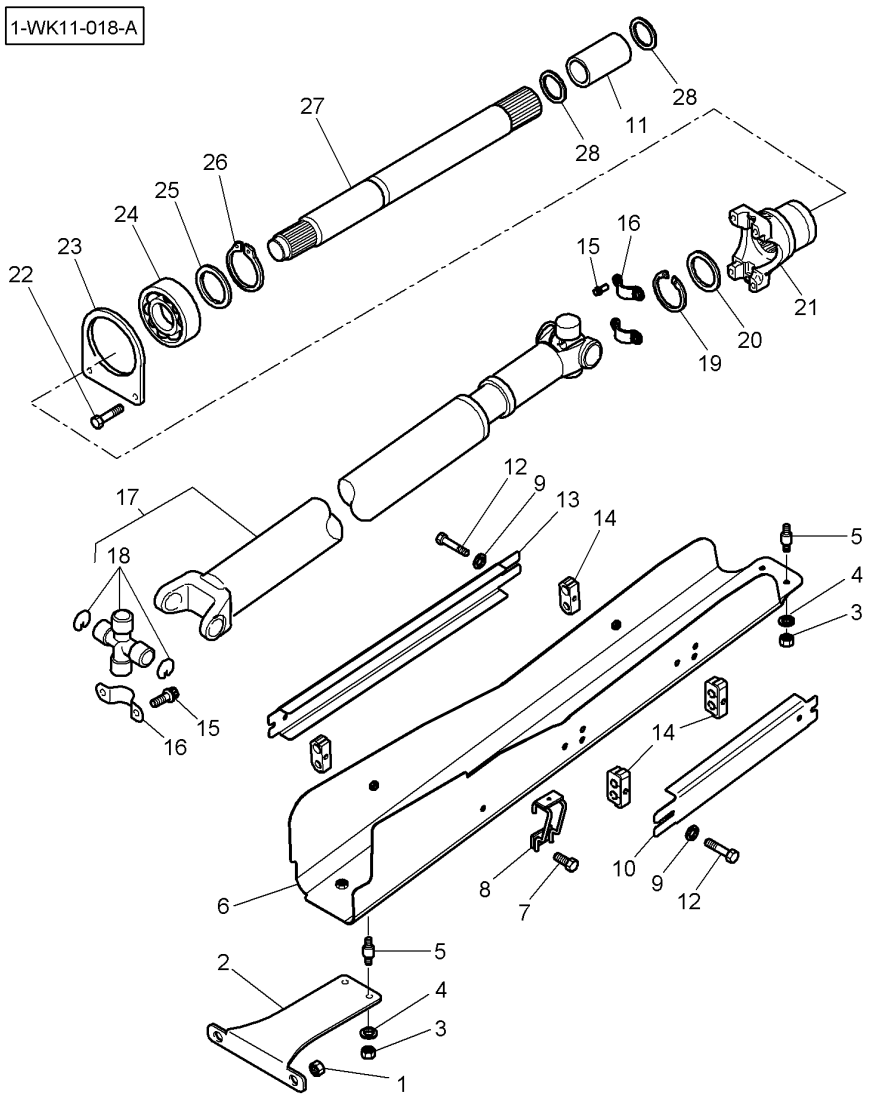

26	339605X1	**1**	CIRCLIP	CIRCLIP ANNELLO ELASTICO	SEEGERING GRAPA CIRCULAR
27	903100320010	**1**	SHAFT	ARBRE ALBERO	WELLE ARBOL
28	**3008359X1**	**2**	O RING	JOINT TORIQUE GIUNTO DI TENUTA	O-RING JUNTA TOROIDAL

Guard And Transmission Shaft
Garant Et Arbre De Transmission
Schutz Und Allradantriebswelle
Riparo E Albero Trasmissione
Defensa Y Arbol De Transmision

60-70

With Suspended Front Axle From R292044
Avec Pont Avant Suspendu A Partir Du R292044
Mit Gefedert Vorderaschse Ab R292044
Con Assale Anteriore Sospeso Dalla R292044
Con Eje Delantero Suspendido A Partir Del R292044

1-WK11-019-A

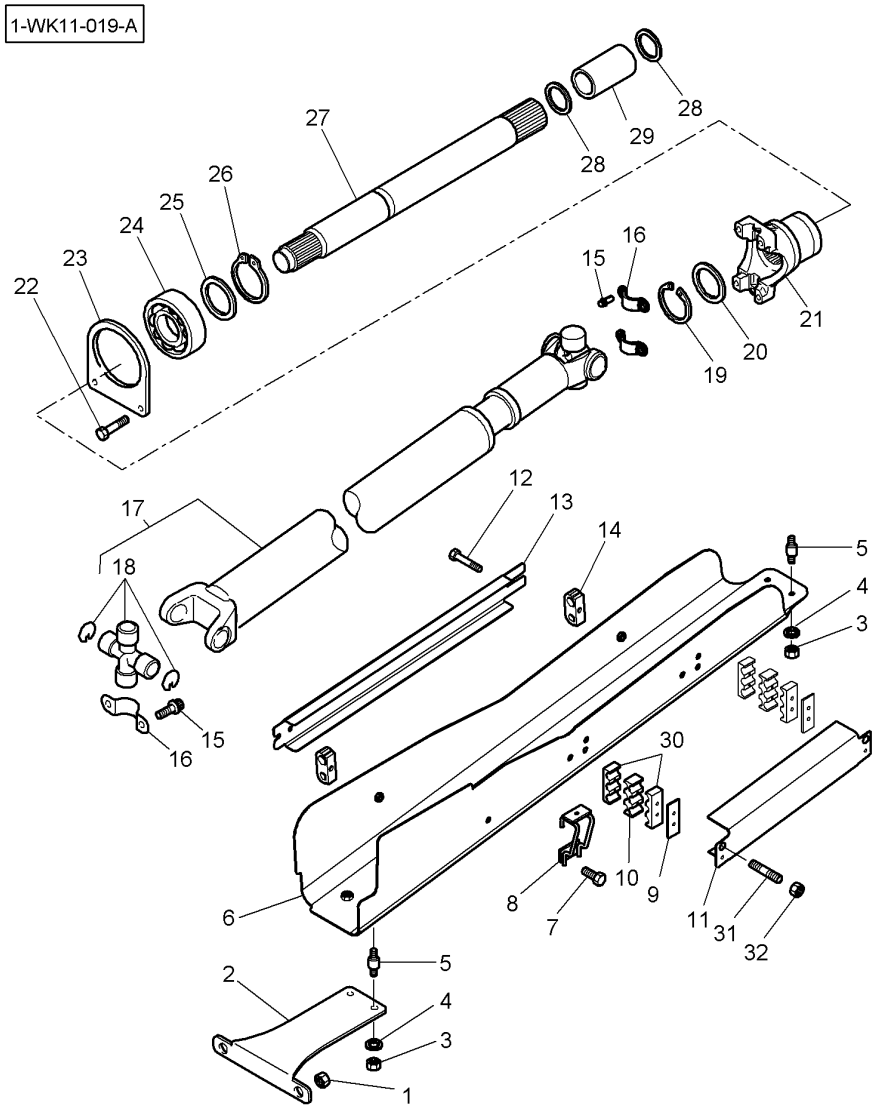

1	3010349X1	M14	**2**	NUT	ECROU DADO	MUTTER TUERCA
2*	4288418M1		**1**	SUPPORT	SUPPORT SOPPORTO	TRAGER SOPORTE
3	339169X1	M8	**4**	NUT	ECROU DADO	MUTTER TUERCA
4	390972X1		**4**	FLAT WASHER	RONDELLE PLATE RONDELLE PIANA	UNTERLEGSCHEIBEN ARANDELA PLANA
5	658081M2		**4**	DAMPER	AMORTISSEUR AMMORTIZZATORE.	DAEMPFER VALV.REGULADORA
6*	4280118M4		**1**	COWL	GARANT CAPPOTTATURA	AUFSATZ CAPERUZA
7	3009192X1	M8 X 16	**1**	SCREW METRIC	VIS METRIQUE VITE METRICA	SCHRAUBE METR TORNILLO METRICO
8	4285302M1		**1**	GUIDE	GUIDE GUIDA	FUEHRUNG GUIA
9*	4276220M1		**2**	PLATE	PLAQUE PIASTRA	PLATTE PLATO
10*	4272808M1		**2**	BRIDLE	BRIDE BRIGLIA	LASCHENSPANNBAND BRIDA
11*	4275683M2		**1**	COWL	GARANT CAPPOTTATURA	AUFSATZ CAPERUZA
12	3009198X1	M8 X 45	**2**	PLOUGH BOLT	VIS A EMBASE VITE TESTA TONDA	SENKSCHLOSSSCHRB TORNILLO ALOJ C
13	3789475M1		**1**	COWL	GARANT CAPPOTTATURA	AUFSATZ CAPERUZA
14	3789441M1	∅ 13.5-18	**4**	BRIDLE	BRIDE BRIGLIA	LASCHENSPANNBAND BRIDA
15	4277509M1		**8**	SCREW	VIS VITE	SCHRAUBE TORNILLO
16	4277510M1		**4**	BRIDLE	BRIDE BRIGLIA	LASCHENSPANNBAND BRIDA
17	4280128M91		**1**	UNIVERSAL JOINT	CARDAN GIUNTO UNIVERSAL	KARDANGELENK JUNTA UNIVERSAL
18	3907427M91	17	**1**	SPIDER	CROISILLON CROCIERA CARDAN.	KREUZSTUECK CRUCETA
19	1441786X1		**1**	CIRCLIP	CIRCLIP ANNELLO ELASTICO	SEEGERING GRAPA CIRCULAR
20	822100320060		**1**	RING	ANNEAU ANELLO	RING. ANILLO
21	4280129M1		**1**	CLEVIS	CHAPE GANCIO D'ATTACCO	GABELSTUECK GANCHO SEGURI.
22	392892X1	M10 X 35	**2**	HEX. SOCK. SCREW	VIS TETE HEX VITE PARKER	ZYLINDERSCHRAUBE TORN.CAB.HUECA
23	3789032M1		**1**	BRIDLE	BRIDE BRIGLIA	LASCHENSPANNBAND BRIDA
24	339602X1		**1**	BEAR. 6212 2RS	RLT 6212 2RS CUSC. 6212 2RS	LAGER 6212 2RS RODA. 6212 2RS
25	X534539346000		**1**	BACKUP RING	CONTRE BAGUE ANELLO APPOGGIO	STUETZRING ANILLA SOPORTE
26	339605X1		**1**	CIRCLIP	CIRCLIP ANNELLO ELASTICO	SEEGERING GRAPA CIRCULAR

Guard And Transmission Shaft
Garant Et Arbre De Transmission
Schutz Und Allradantriebswelle
Riparo E Albero Trasmissione
Defensa Y Arbol De Transmision

60-70

With Suspended Front Axle From R292044
Avec Pont Avant Suspendu A Partir Du R292044
Mit Gefedert Vorderaschse Ab R292044
Con Assale Anteriore Sospeso Dalla R292044
Con Eje Delantero Suspendido A Partir Del R292044

1-WK11-019-A

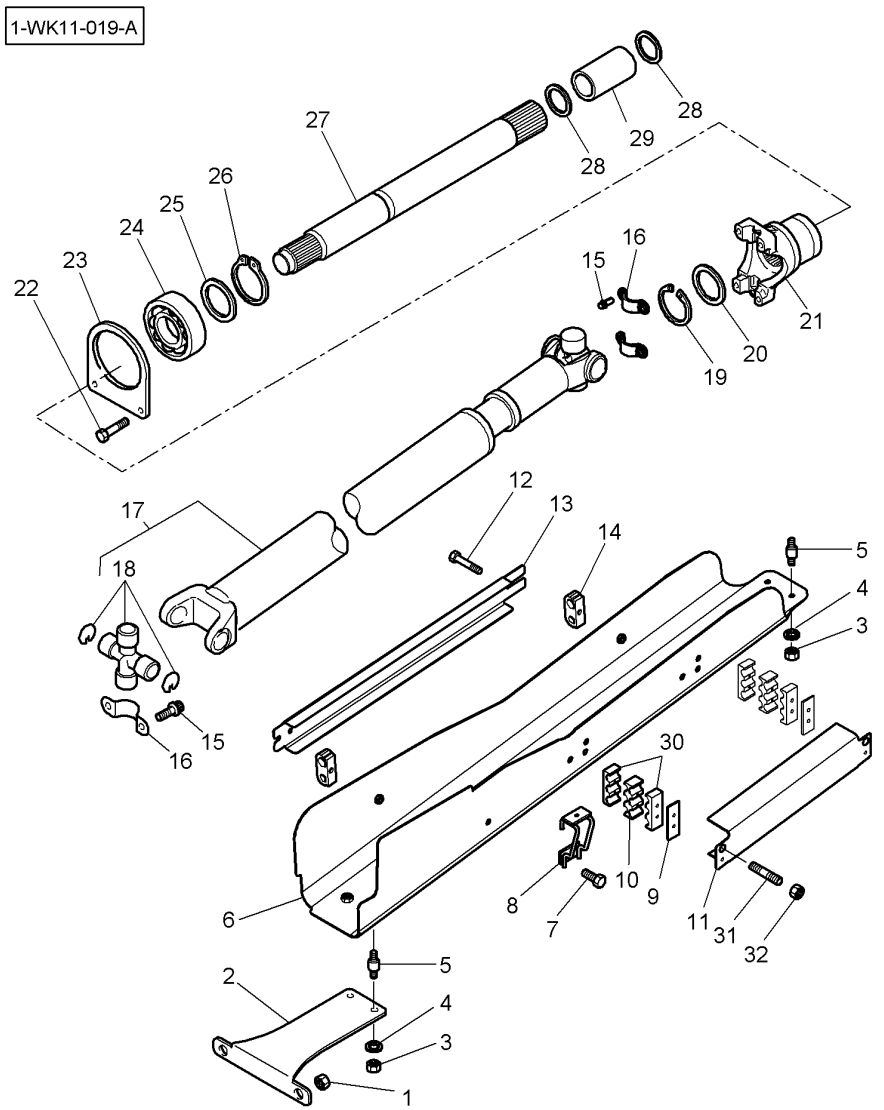

27	903100320010	**1**	SHAFT	ARBRE ALBERO	WELLE ARBOL
28	**3008359X1**	**2**	O RING	JOINT TORIQUE GIUNTO DI TENUTA	O-RING JUNTA TOROIDAL
29	916101320100	**1**	BUSH	BAGUE BOCCOLA	RING CASQUILLO
30*	4276219M1	**4**	BRIDLE	BRIDE BRIGLIA	LASCHENSPANNBAND BRIDA
31*	3011629X1	**4**	STUD	GOUJON SPINOTTO FILETT.	STEHBOLZEN ESPARRAGO ROSCA.
32*	339030X1	**4**	NUT	ECROU DADO	MUTTER TUERCA

Front Axle 4 Wheel Drive **Essieu Avant 4 Roues Motrices** **Vorderachse Allradantrieb** **Assale Anteriore 4 Ruote Motrici** **Eje Delantero 4 Ruedas Motrices**	**Housing** **Carter** **Gehaeuse** **Carcassa** **Carter**	**60-75**	**Front Axle Fixed** **Pont Avant Fixe** **Dtarr Vorderaschse** **Assale Anteriore Fisso** **Eje Delantero Fijo**

1-WK03-006-B

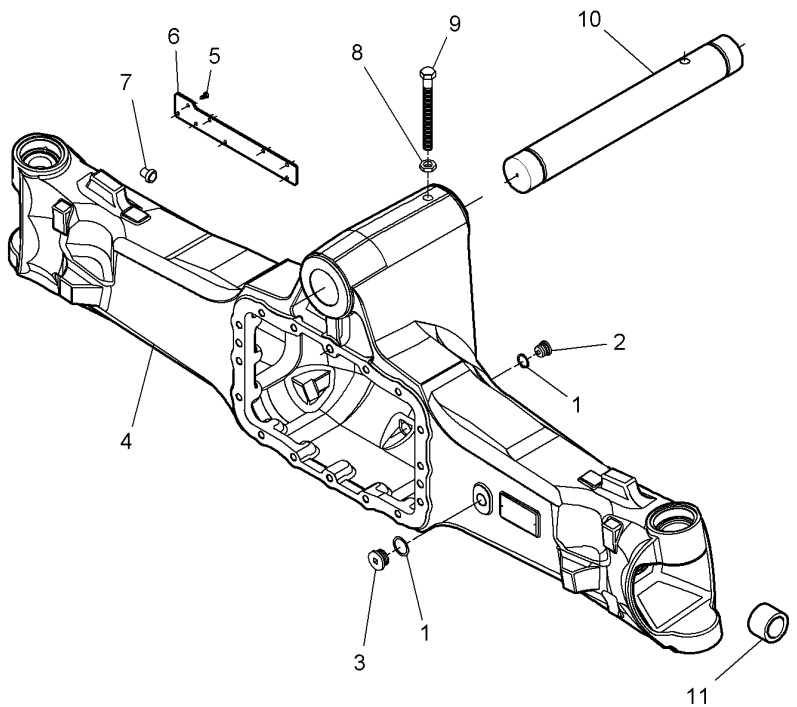

1	X540007678000		**2**	RING	ANNEAU ANELLO	RING. ANILLO
2	385300020130		**1**	PLUG	BOUCHON TAPPO	STOPFEN TAPON
3	000065060		**1**	PLUG	BOUCHON TAPPO	STOPFEN TAPON
4*	7600170307	⇒ 7600170302 ⇒ 7600170305 ⇒ 7600170306	**1**	HOUSING	CARTER CARCASSA	GEHAEUSE ALOJAMIENTO
5	000054058		**8**	SCREW	VIS VITE	SCHRAUBE TORNILLO
6	7500604201		**1**	FENCE	PROTECTION RECINTO	GITTER CERCA
7*	7500604301	➡ R083040	**1**	BUSH	BAGUE BOCCOLA	RING CASQUILLO
8	006033208		**1**	NUT	ECROU DADO	MUTTER TUERCA
9	016033621		**1**	SCREW	VIS VITE	SCHRAUBE TORNILLO
10	7600101401		**1**	CLEVIS PIN	AXE PERNO D'ATTACCO	SPLINTBOLZEN BULON CILINDRICO
11*			**X**	NOT USED	NON UTILISE INUSATO	NICHT VERWENDET NO SE USA

Front Axle 4 Wheel Drive Essieu Avant 4 Roues Motrices Vorderachse Allradantrieb Assale Anteriore 4 Ruote Motrici Eje Delantero 4 Ruedas Motrices	Housing Carter Gehaeuse Carcassa Carter	60-80	With Suspended Front Axle Avec Pont Avant Suspendu Mit Gefedert Vorderaschse Con Assale Anteriore Sospeso Con Eje Delantero Suspendido

1-WK03-009-A

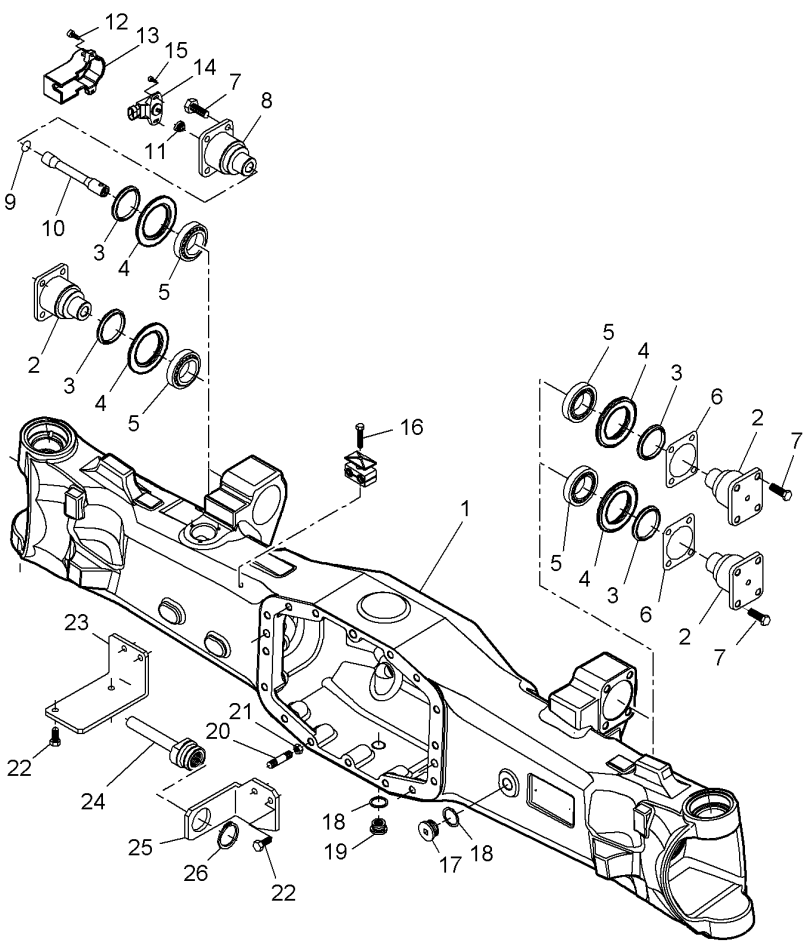

1	7600170503		**1**	HOUSING	CARTER CARCASSA	GEHAEUSE ALOJAMIENTO
2	7600102502		**3**	CLEVIS PIN	AXE PERNO D'ATTACCO	SPLINTBOLZEN BULON CILINDRICO
3	7300104701		**4**	SEAL	JOINT ETANCHEITE GIUNTO ROTONDO	DICHTRING JUNTA REDONDA
4	7300104601		**4**	BEARING FLANGE	FLASQUE ROULT BEARING FLANGE	LAGERFLANSCH BEARING FLANGE
5	005103691		**4**	BEARING ASSY	ROULEMENT CUSCINETTO COMPL	RADIALLAGER RODAMIENTO RAD
6	F718301020290	⧗ 0.2 MM	**2**	DISC	DISQUE DISCO	SCHEIBE DISCO
6	F718301020300	⧗ 0.5 MM	**2**	DISC	DISQUE DISCO	SCHEIBE DISCO
7	016011027		**18**	SCREW	VIS VITE	SCHRAUBE TORNILLO
8	7600102602		**1**	CLEVIS PIN	AXE PERNO D'ATTACCO	SPLINTBOLZEN BULON CILINDRICO
9	001051584		**1**	O RING	JOINT TORIQUE GIUNTO DI TENUTA	O-RING JUNTA TOROIDAL
10	7600102902		**1**	CLEVIS PIN	AXE PERNO D'ATTACCO	SPLINTBOLZEN BULON CILINDRICO
11	7300105101		**1**	GASKET	JOINT GIUNTO PIANO	FLACHDICHTUNG JUNTA PLANA
12	016010368		**2**	SCREW	VIS VITE	SCHRAUBE TORNILLO
13*	7600104301		**1**	HELMET	CAPUCHON CASCO	SCHUTZHELM CASCO
14	7300160101		**1**	SWITCH,INDIRECT	CONTACTEUR INTERRUTTORE IND	KONTAKTSCHALTER CONTACTOR
15	3765539M1		**2**	SCREW	VIS VITE	SCHRAUBE TORNILLO
16	016030718		**1**	SCREW	VIS VITE	SCHRAUBE TORNILLO
17	000065060		**1**	PLUG	BOUCHON TAPPO	STOPFEN TAPON
18	X540007678000		**2**	RING	ANNEAU ANELLO	RING. ANILLO
19	385300020130		**1**	PLUG	BOUCHON TAPPO	STOPFEN TAPON
20			**X**	NOT USED	NON UTILISE INUSATO	NICHT VERWENDET NO SE USA
21			**X**	NOT USED	NON UTILISE INUSATO	NICHT VERWENDET NO SE USA
22	016010373		**6**	SCREW	VIS VITE	SCHRAUBE TORNILLO
23	7600402101		**1**	STIRRUP	ETRIER STAFFA	BUEGEL FUACION
24	7602601002		**1**	TUBE	TUBE TUBO.	ROHR TUBO.
25	7600402201		**1**	STIRRUP	ETRIER STAFFA	BUEGEL FUACION

Front Axle 4 Wheel Drive **Essieu Avant 4 Roues Motrices** **Vorderachse Allradantrieb** **Assale Anteriore 4 Ruote Motrici** **Eje Delantero 4 Ruedas Motrices**	**Housing** **Carter** **Gehaeuse** **Carcassa** **Carter**	**60-80**	**With Suspended Front Axle** **Avec Pont Avant Suspendu** **Mit Gefedert Vorderaschse** **Con Assale Anteriore Sospeso** **Con Eje Delantero Suspendido**

1-WK03-009-A

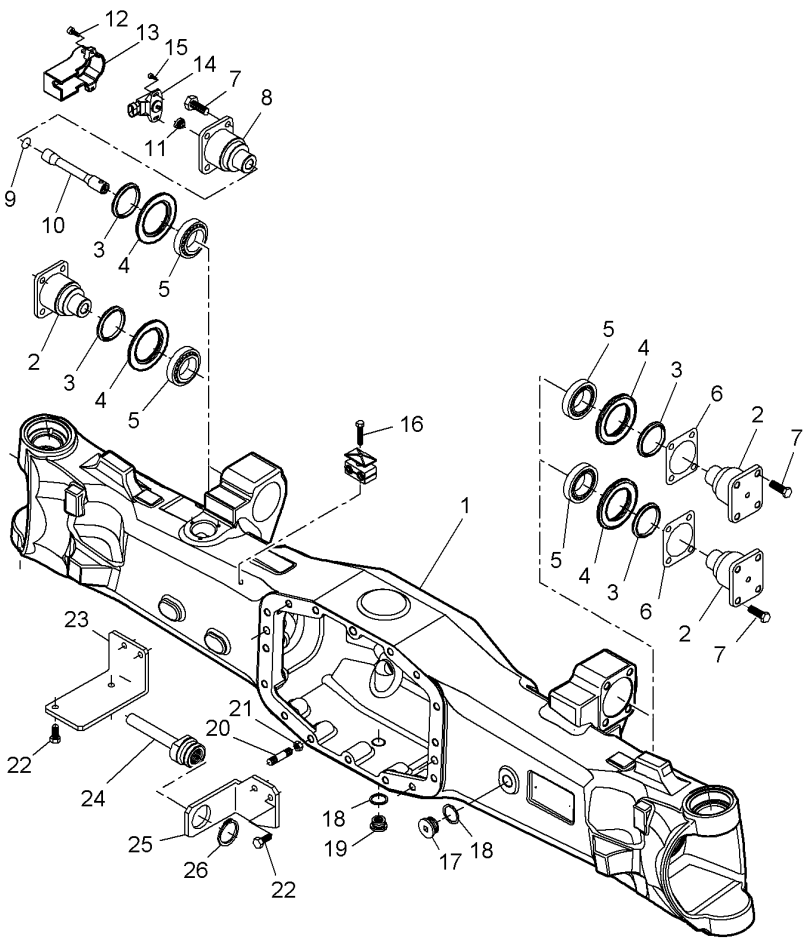

26	002010076	**1**	CIRCLIP	CIRCLIP ANNELLO ELASTICO SEEGERING GRAPA CIRCULAR

Front Axle 4 Wheel Drive **Essieu Avant 4 Roues Motrices** **Vorderachse Allradantrieb** **Assale Anteriore 4 Ruote Motrici** **Eje Delantero 4 Ruedas Motrices**	**Housing** **Carter** **Gehaeuse** **Carcassa** **Carter**	**60-85**	**With Suspended Front Axle** **Avec Pont Avant Suspendu** **Mit Gefedert Vorderaschse** **Con Assale Anteriore Sospeso** **Con Eje Delantero Suspendido**

1-WK03-010-A

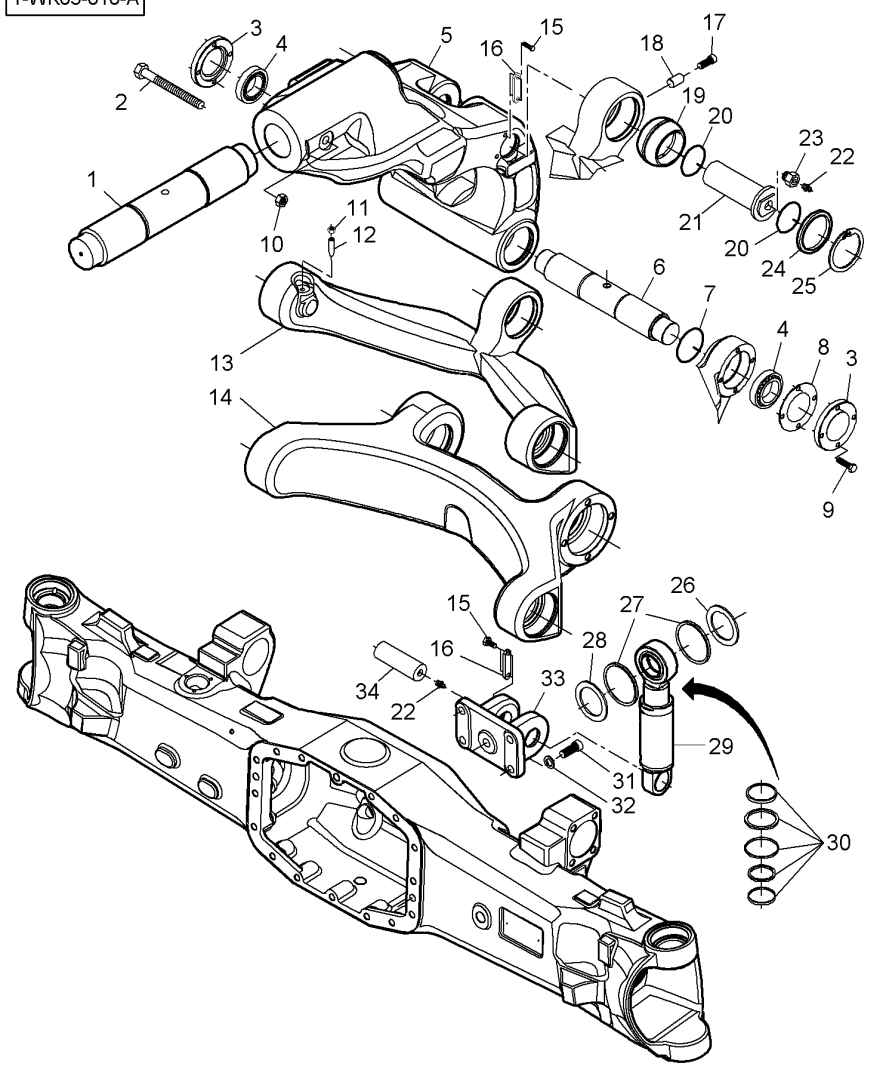

1	7600102101		**1**	CLEVIS PIN	AXE PERNO D'ATTACCO	SPLINTBOLZEN BULON CILINDRICO
2	016033621		**1**	SCREW	VIS VITE	SCHRAUBE TORNILLO
3	7600102302		**2**	COVER	COUVERCLE COPERCHIO	ABDECKUNG. CUBIERTA
4	005090665		**2**	BEARING ASSY	ROULEMENT CUSCINETTO COMPL	RADIALLAGER RODAMIENTO RAD
5	7600101702		**1**	SUPPORT	SUPPORT SOPPORTO	TRAGER SOPORTE
6	7600102401		**1**	CLEVIS PIN	AXE PERNO D'ATTACCO	SPLINTBOLZEN BULON CILINDRICO
7	001051620		**6**	O RING	JOINT TORIQUE GIUNTO DI TENUTA	O-RING JUNTA TOROIDAL
8	7600104001	⧗ 0.20 MM	**1**	CHOCK	CALE PASSACAVO	UNTERLEG-KEIL CALZA
8	7600104101	⧗ 0.50 MM	**1**	CHOCK	CALE PASSACAVO	UNTERLEG-KEIL CALZA
9	X487535706000		**8**	SCREW	VIS VITE	SCHRAUBE TORNILLO
10	006033208		**1**	NUT	ECROU DADO	MUTTER TUERCA
11	006033580		**1**	NUT	ECROU DADO	MUTTER TUERCA
12	000235011A		**1**	SCREW	VIS VITE	SCHRAUBE TORNILLO
13	7600101801		**1**	LEVER	LEVIER LEVA	HEBEL PALANCA
14	7600101902		**1**	LEVER	LEVIER LEVA	HEBEL PALANCA
15	016010370	➡| ..... M8 X 20	**4**	SCREW	VIS VITE	SCHRAUBE TORNILLO
15*	339761X1	➡ ..... M8 X 25	**4**	HEX. SOCK. SCREW	VIS TETE HEX VITE PARKER	ZYLINDERSCHRAUBE TORN.CAB.HUECA
16	7300105601	➡|	**2**	TAPPET PLATE	PLAQUETTE PIASTRA PUNTERIE	STOESSELTELLER PLACA DE VALVULA
16*	7600104401	➡	**2**	TAPPET PLATE	PLAQUETTE PIASTRA PUNTERIE	STOESSELTELLER PLACA DE VALVULA
17	016252881		**1**	SCREW	VIS VITE	SCHRAUBE TORNILLO
18	7600103402		**1**	PIN HITCH	BROCHE PERNO ATTACCO	KUPPLUNGSBOLZEN PASADOR ENGAN.
19	7300104401		**1**	TOGGLE	ROTULE ROTULA	GELENKZAPFEN ROTULA
20	001053758		**2**	O RING	JOINT TORIQUE GIUNTO DI TENUTA	O-RING JUNTA TOROIDAL
21	7600102201		**1**	CLEVIS PIN	AXE PERNO D'ATTACCO	SPLINTBOLZEN BULON CILINDRICO
22	339003X1		**2**	GREASE FITTING	GRAISSEUR INGRASSATORE	DRUCKSCHMIERKOPF ENGRASADOR
23	7600103501		**1**	PLUG	BOUCHON TAPPO	STOPFEN TAPON

Front Axle 4 Wheel Drive	Housing	60-85	With Suspended Front Axle
Essieu Avant 4 Roues Motrices	Carter		Avec Pont Avant Suspendu
Vorderachse Allradantrieb	Gehaeuse		Mit Gefedert Vorderaschse
Assale Anteriore 4 Ruote Motrici	Carcassa		Con Assale Anteriore Sospeso
Eje Delantero 4 Ruedas Motrices	Carter		Con Eje Delantero Suspendido

1-WK03-010-A

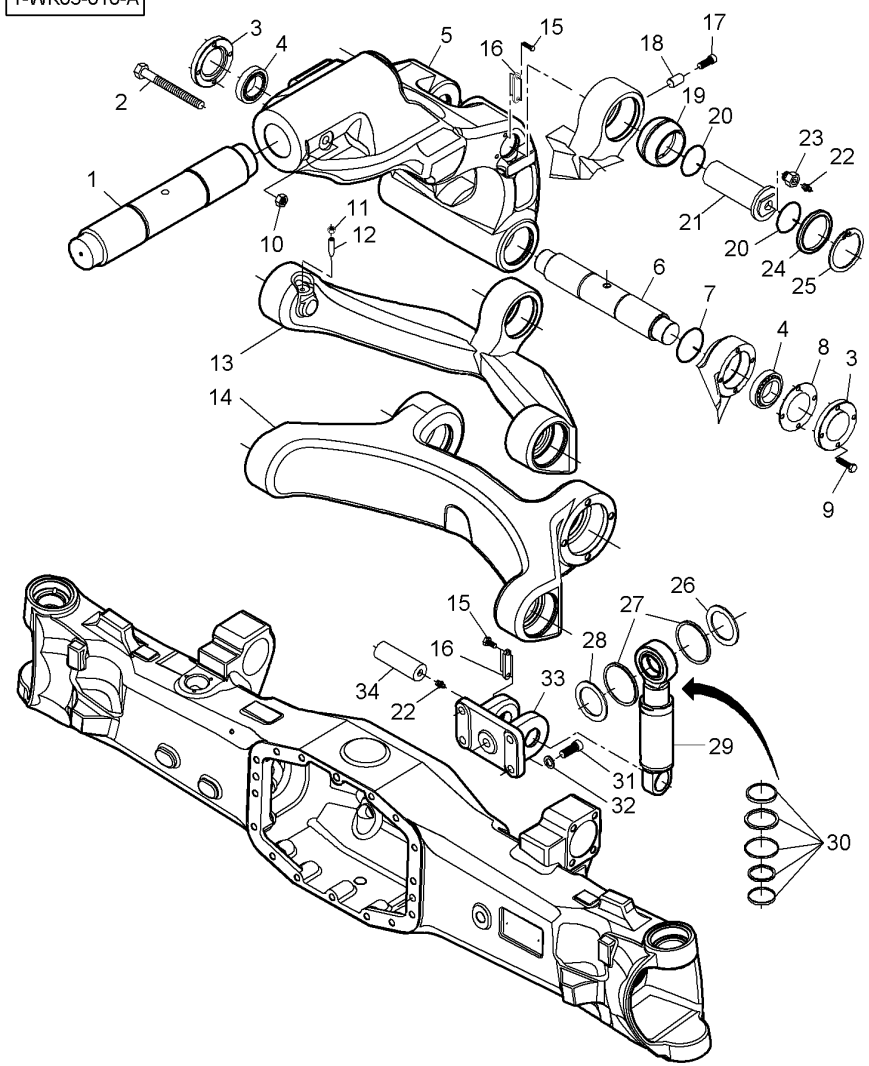

24	7300104501	**2**	SEAL	JOINT ETANCHEITE GIUNTO ROTONDO	DICHTRING JUNTA REDONDA
25	002020088	**2**	THRUSTER	ARRETOIR SPINGITORE	DRUCKRING PROPULSOR
26	7600103302	**1**	WASHER	RONDELLE RONDELLA	SCHEIBE ARANDELA
27	001113813	**2**	BUSH	BAGUE BOCCOLA	RING CASQUILLO
28	7600103701	**1**	WASHER	RONDELLE RONDELLA	SCHEIBE ARANDELA
29	7600160001	**1**	RAM	VERIN CILINDRO IDRAUL.	HYDR.ZYLINDER ARIETE
30	7600145001	**1**	KIT, FACING	KIT GARNITURE KIT RIVESTIMENTO	SATZ BELAEGE JUEGO DE FORRO
31	016163810	**4**	SCREW	VIS VITE	SCHRAUBE TORNILLO
32	011043818	**4**	WASHER	RONDELLE RONDELLA	SCHEIBE ARANDELA
33	7600102002	**1**	SUPPORT	SUPPORT SOPPORTO	TRAGER SOPORTE
34	7600103101	**1**	CLEVIS PIN	AXE PERNO D'ATTACCO	SPLINTBOLZEN BULON CILINDRICO

Front Axle 4 Wheel Drive	**Differential**	**60-90**
Essieu Avant 4 Roues Motrices	**Differentiel**	
Vorderachse Allradantrieb	**Differential**	
Assale Anteriore 4 Ruote Motrici	**Differenziale**	
Eje Delantero 4 Ruedas Motrices	**Diferencial**	

Front Axle Fixed
Pont Avant Fixe
Dtarr Vorderaschse
Assale Anteriore Fisso
Eje Delantero Fijo

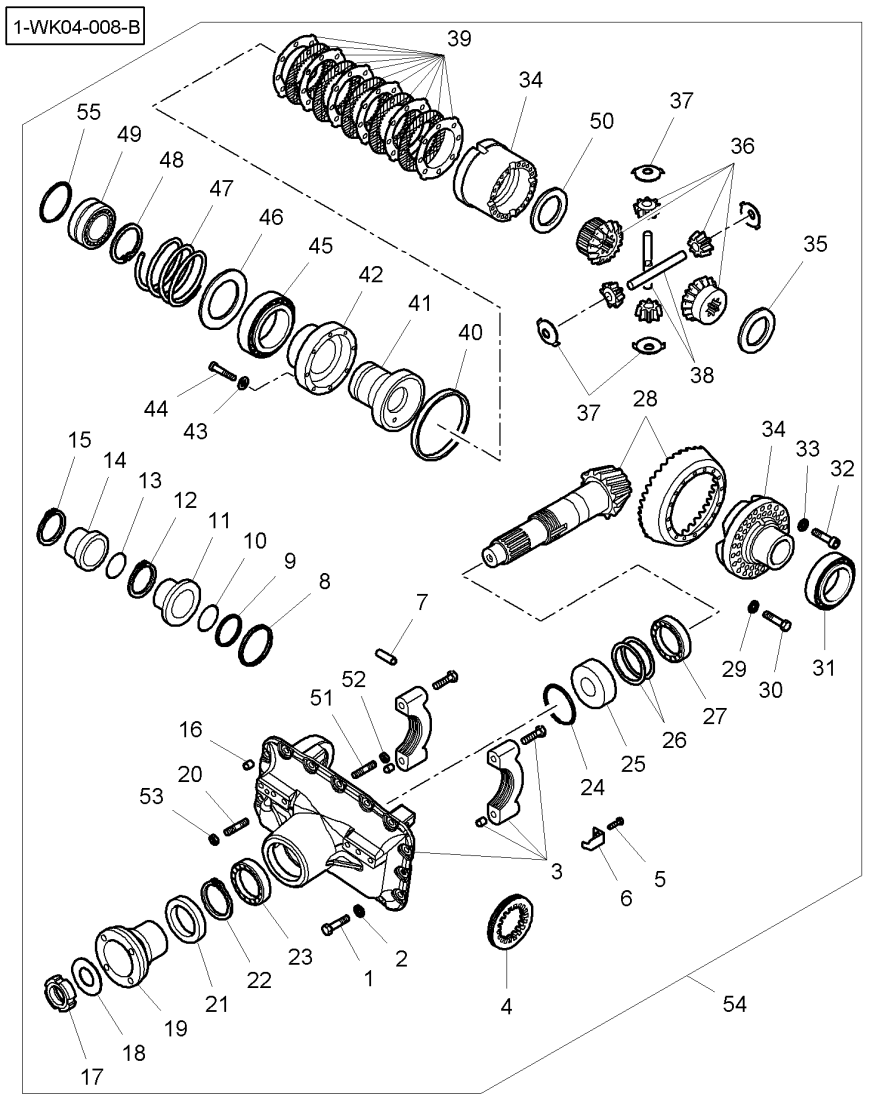

1*	3764102M1	➡	R083040	**13**	SCREW	VIS / VITE / SCHRAUBE / TORNILLO
1*	3764102M1	➡	R083041	**15**	SCREW	VIS / VITE / SCHRAUBE / TORNILLO
2	011053790			**16**	WASHER	RONDELLE / RONDELLA / SCHEIBE / ARANDELA
3	7600170402			**1**	SUPPORT	SUPPORT / SOPPORTO / TRAGER / SOPORTE
4	3765787M1			**1**	NUT	ECROU / DADO / MUTTER / TUERCA
5	1444071X1			**1**	HEX. SOCK. SCREW	VIS TETE HEX / VITE PARKER / ZYLINDERSCHRAUBE / TORN.CAB.HUECA
6	3765786M1			**1**	LOCKING PLATE	PLAQUE BLOCAGE / PIASTRA DI FERMO / SICH.BLECH / PLACA DE BLOCAJE
7	014010327			**1**	DOWEL	PLOT / SPINA / ZYLINDERSTIFT / CENTRAJE
8	001423359			**1**	SEAL	JOINT ETANCHEITE / GIUNTO ROTONDO / DICHTRING / JUNTA REDONDA
9	001423360			**1**	SEAL	JOINT ETANCHEITE / GIUNTO ROTONDO / DICHTRING / JUNTA REDONDA
10	3766055M1			**1**	O RING	JOINT TORIQUE / GIUNTO DI TENUTA / O-RING / JUNTA TOROIDAL
11	3766054M1			**1**	BUSH	BAGUE / BOCCOLA / RING / CASQUILLO
12	3766056M1			**1**	CIRCLIP	CIRCLIP / ANNELLO ELASTICO / SEEGERING / GRAPA CIRCULAR
13	001051564			**1**	BUSH	BAGUE / BOCCOLA / RING / CASQUILLO
14	3765836M1			**1**	PISTON	PISTON / PISTONE / KOLBEN / PISTON
15	3765837M1			**1**	RING	ANNEAU / ANELLO / RING. / ANILLO
16	014013773			**2**	DOWEL	PLOT / SPINA / ZYLINDERSTIFT / CENTRAJE
17	3765039M1			**1**	NUT	ECROU / DADO / MUTTER / TUERCA
18	7600401701			**1**	BUSH	BAGUE / BOCCOLA / RING / CASQUILLO
19	7600470401			**1**	BRIDLE	BRIDE / BRIGLIA / LASCHENSPANNBAND / BRIDA
20	017023490			**2**	STUD	GOUJON / SPINOTTO FILETT. / STEHBOLZEN / ESPARRAGO ROSCA.
21	7600401201			**1**	SEAL	JOINT ETANCHEITE / GIUNTO ROTONDO / DICHTRING / JUNTA REDONDA
22	002021812			**1**	SNAPRING	SEGMENT ARRET / ANELLO SIEGER / SPRENGRING / ANILLA RETENCION
23	000137100			**1**	BEARING ASSY	ROULEMENT / CUSCINETTO COMPL / RADIALLAGER / RODAMIENTO RAD
24	3765901M1			**1**	O RING	JOINT TORIQUE / GIUNTO DI TENUTA / O-RING / JUNTA TOROIDAL
25	3765873M1	⧗	5,80 MM	**X**	SPACER	ENTRETOISE / DISTANZIALE / ABSTANDSTUECK / DISCO ESPACIADOR

Front Axle 4 Wheel Drive	**Differential**	**60-90**	**Front Axle Fixed**
Essieu Avant 4 Roues Motrices	**Differentiel**		**Pont Avant Fixe**
Vorderachse Allradantrieb	**Differential**		**Dtarr Vorderaschse**
Assale Anteriore 4 Ruote Motrici	**Differenziale**		**Assale Anteriore Fisso**
Eje Delantero 4 Ruedas Motrices	**Diferencial**		**Eje Delantero Fijo**

1-WK04-008-B

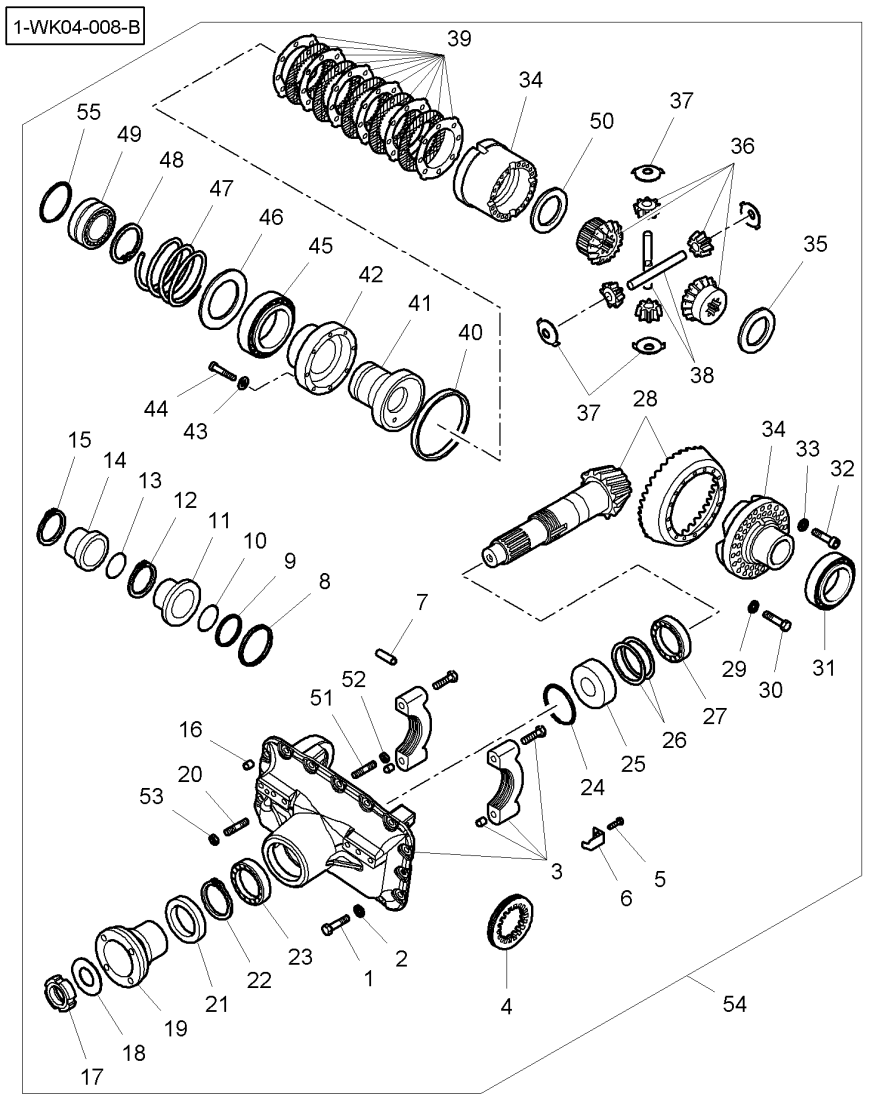

25	3765874M1	⧗	5,83 MM	X	SPACER	ENTRETOISE / DISTANZIALE / ABSTANDSTUECK / DISCO ESPACIADOR
25	3765875M1	⧗	5,86 MM	X	SPACER	ENTRETOISE / DISTANZIALE / ABSTANDSTUECK / DISCO ESPACIADOR
25	3765876M1	⧗	5,89 MM	X	SPACER	ENTRETOISE / DISTANZIALE / ABSTANDSTUECK / DISCO ESPACIADOR
25	3765877M1	⧗	5,92 MM	X	SPACER	ENTRETOISE / DISTANZIALE / ABSTANDSTUECK / DISCO ESPACIADOR
25	3765878M1	⧗	5,95 MM	X	SPACER	ENTRETOISE / DISTANZIALE / ABSTANDSTUECK / DISCO ESPACIADOR
25	3765879M1	⧗	5,98 MM	X	SPACER	ENTRETOISE / DISTANZIALE / ABSTANDSTUECK / DISCO ESPACIADOR
25	3765880M1	⧗	6,01 MM	X	SPACER	ENTRETOISE / DISTANZIALE / ABSTANDSTUECK / DISCO ESPACIADOR
25	3765881M1	⧗	6,04 MM	X	SPACER	ENTRETOISE / DISTANZIALE / ABSTANDSTUECK / DISCO ESPACIADOR
25	3765882M1	⧗	6,07 MM	X	SPACER	ENTRETOISE / DISTANZIALE / ABSTANDSTUECK / DISCO ESPACIADOR
25	3765883M1	⧗	6,10 MM	X	SPACER	ENTRETOISE / DISTANZIALE / ABSTANDSTUECK / DISCO ESPACIADOR
25	3765884M1	⧗	6,13 MM	X	SPACER	ENTRETOISE / DISTANZIALE / ABSTANDSTUECK / DISCO ESPACIADOR
25	3765885M1	⧗	6,16 MM	X	SPACER	ENTRETOISE / DISTANZIALE / ABSTANDSTUECK / DISCO ESPACIADOR
25	3765886M1	⧗	6,19 MM	X	SPACER	ENTRETOISE / DISTANZIALE / ABSTANDSTUECK / DISCO ESPACIADOR
25	3765887M1	⧗	6,22 MM	X	SPACER	ENTRETOISE / DISTANZIALE / ABSTANDSTUECK / DISCO ESPACIADOR
25	3765888M1	⧗	6,25 MM	X	SPACER	ENTRETOISE / DISTANZIALE / ABSTANDSTUECK / DISCO ESPACIADOR
25	3765889M1	⧗	6,28 MM	X	SPACER	ENTRETOISE / DISTANZIALE / ABSTANDSTUECK / DISCO ESPACIADOR
25	3765890M1	⧗	6,31 MM	X	SPACER	ENTRETOISE / DISTANZIALE / ABSTANDSTUECK / DISCO ESPACIADOR
25	3765891M1	⧗	6,34 MM	X	SPACER	ENTRETOISE / DISTANZIALE / ABSTANDSTUECK / DISCO ESPACIADOR
25	3765892M1	⧗	6,37 MM	X	SPACER	ENTRETOISE / DISTANZIALE / ABSTANDSTUECK / DISCO ESPACIADOR
25	3765893M1	⧗	6,40 MM	X	SPACER	ENTRETOISE / DISTANZIALE / ABSTANDSTUECK / DISCO ESPACIADOR
25	3765894M1	⧗	6,43 MM	X	SPACER	ENTRETOISE / DISTANZIALE / ABSTANDSTUECK / DISCO ESPACIADOR
25	3765895M1	⧗	6,46 MM	X	SPACER	ENTRETOISE / DISTANZIALE / ABSTANDSTUECK / DISCO ESPACIADOR
25	3765896M1	⧗	6,49 MM	X	SPACER	ENTRETOISE / DISTANZIALE / ABSTANDSTUECK / DISCO ESPACIADOR
25	3765897M1	⧗	6,52 MM	X	SPACER	ENTRETOISE / DISTANZIALE / ABSTANDSTUECK / DISCO ESPACIADOR
25	3765898M1	⧗	6,55 MM	X	SPACER	ENTRETOISE / DISTANZIALE / ABSTANDSTUECK / DISCO ESPACIADOR
25	3765899M1	⧗	6,58 MM	X	SPACER	ENTRETOISE / DISTANZIALE / ABSTANDSTUECK / DISCO ESPACIADOR

Front Axle 4 Wheel Drive	**Differential**	**60-90**
Essieu Avant 4 Roues Motrices	**Differentiel**	
Vorderachse Allradantrieb	**Differential**	
Assale Anteriore 4 Ruote Motrici	**Differenziale**	
Eje Delantero 4 Ruedas Motrices	**Diferencial**	

Front Axle Fixed
Pont Avant Fixe
Dtarr Vorderaschse
Assale Anteriore Fisso
Eje Delantero Fijo

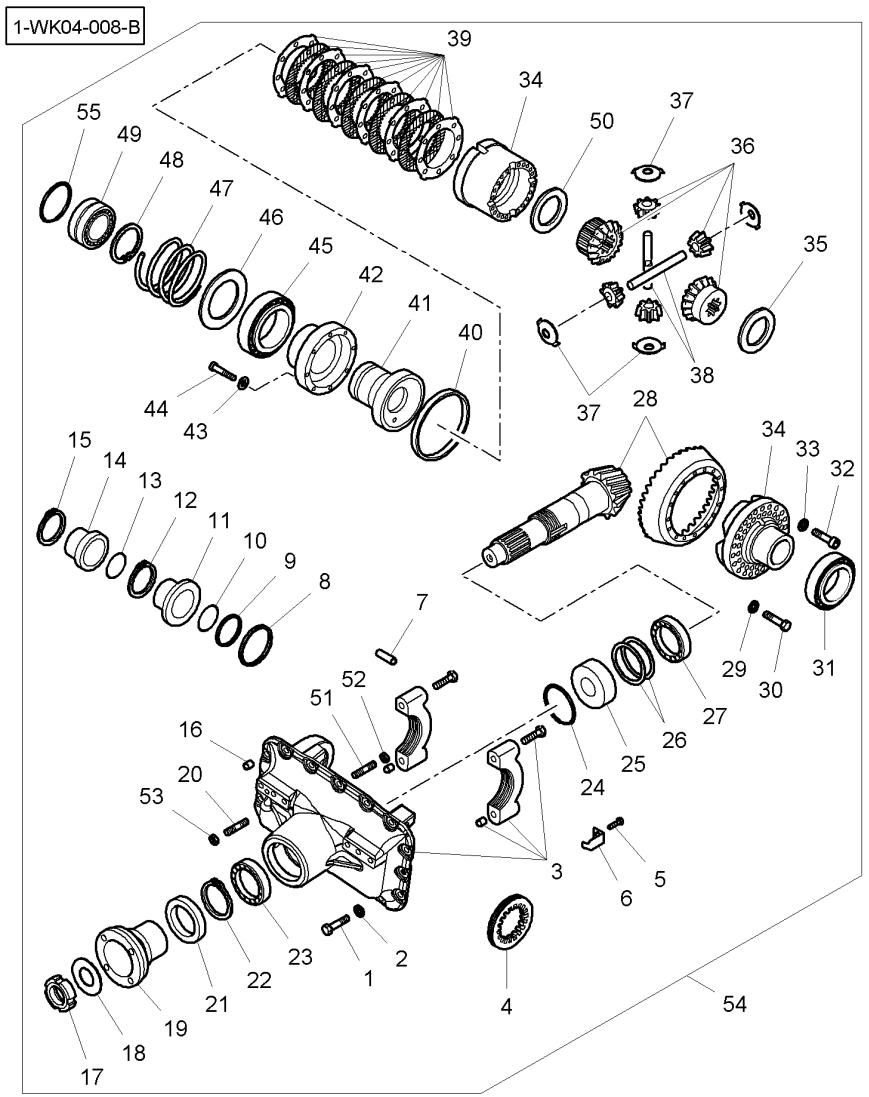

25	3765900M1	⧗ 7,00 MM	**X**	SPACER	ENTRETOISE DISTANZIALE	ABSTANDSTUECK DISCO ESPACIADOR
26	000245025A	⧗ 0.10 MM	**X**	CHOCK	CALE PASSACAVO	UNTERLEG-KEIL CALZA
26	000245027A	⧗ 0.30 MM	**X**	CHOCK	CALE PASSACAVO	UNTERLEG-KEIL CALZA
26	000245028A	⧗ 0.50 MM	**X**	CHOCK	CALE PASSACAVO	UNTERLEG-KEIL CALZA
27	005093366		**1**	BEARING ASSY	ROULEMENT CUSCINETTO COMPL	RADIALLAGER RODAMIENTO RAD
28	7600450101		**1**	KIT, BEVEL GEAR	COUPLE CONIQUE KIT COPPIA CONIC	KEGELRADSATZ CORONA Y PINON
29	011141455		**18**	WASHER	RONDELLE RONDELLA	SCHEIBE ARANDELA
30	016010786		**18**	SCREW	VIS VITE	SCHRAUBE TORNILLO
31	005103365		**1**	BEARING ASSY	ROULEMENT CUSCINETTO COMPL	RADIALLAGER RODAMIENTO RAD
32	000057970		**12**	SCREW	VIS VITE	SCHRAUBE TORNILLO
33	011041318		**12**	WASHER	RONDELLE RONDELLA	SCHEIBE ARANDELA
34	3766061M91		**1**	HOUSING	CARTER CARCASSA	GEHAEUSE ALOJAMIENTO
35	000245680		**1**	WASHER	RONDELLE RONDELLA	SCHEIBE ARANDELA
36	7600470201		**1**	GEAR	ENGRENAGE INGRANAGGIO	ZAHNRAD ENGRANAJE
37	7600401401		**4**	WASHER	RONDELLE RONDELLA	SCHEIBE ARANDELA
38	000215040A		**2**	CLEVIS PIN	AXE PERNO D'ATTACCO	SPLINTBOLZEN BULON CILINDRICO
39	000727512A		**1**	CLUTCH DISC	DISQUE EMBRAYAGE DISCO FRIZIONE	KUPPLUNGSSCHEIBE DISCO DE EMBRAGU
40	000139339		**1**	BUSH	BAGUE BOCCOLA	RING CASQUILLO
41	7600400401		**1**	BRIDLE	BRIDE BRIGLIA	LASCHENSPANNBAND BRIDA
42	3766063M1		**1**	COVER	COUVERCLE COPERCHIO	ABDECKUNG. CUBIERTA
43	011043431		**18**	WASHER	RONDELLE RONDELLA	SCHEIBE ARANDELA
44	3766065M1		**18**	SCREW	VIS VITE	SCHRAUBE TORNILLO
45	G816300020180		**1**	CUP AND CONE	CUVETTE ET CONE COPPA E CONO	KEGELROLLENLAGER PISTA Y CONO
46	000345621	⧗ 0.50 MM	**3**	CHOCK	CALE PASSACAVO	UNTERLEG-KEIL CALZA
46	000345622	⧗ 0.20 MM	**1**	CHOCK	CALE PASSACAVO	UNTERLEG-KEIL CALZA
46	000345623A	⧗ 0.10 MM	**1**	CHOCK	CALE PASSACAVO	UNTERLEG-KEIL CALZA

Front Axle 4 Wheel Drive	Differential	60-90	Front Axle Fixed
Essieu Avant 4 Roues Motrices	Differentiel		Pont Avant Fixe
Vorderachse Allradantrieb	Differential		Dtarr Vorderaschse
Assale Anteriore 4 Ruote Motrici	Differenziale		Assale Anteriore Fisso
Eje Delantero 4 Ruedas Motrices	Diferencial		Eje Delantero Fijo

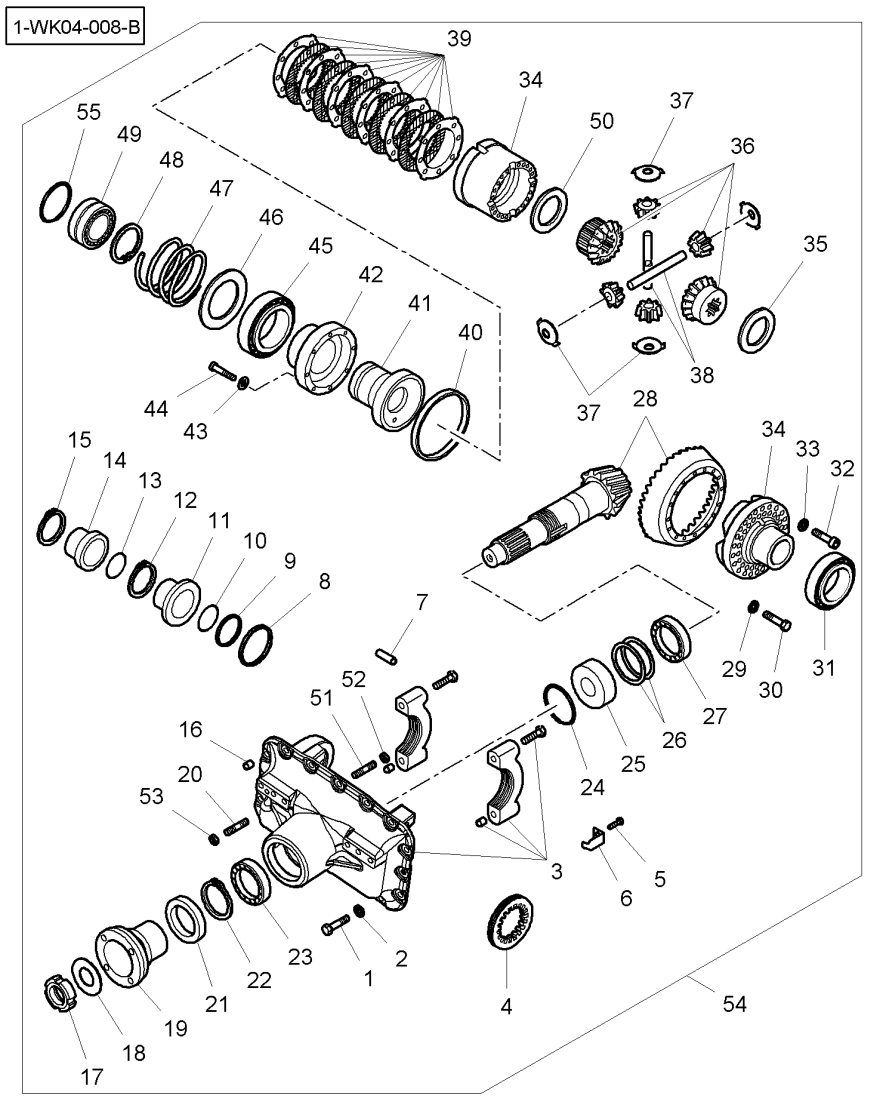

47	7600400501		**1**	SPRING	RESSORT MOLLA	FEDER MUELLE
48	002011794		**1**	SNAPRING	SEGMENT ARRET ANELLO SIEGER	SPRENGRING ANILLA RETENCION
49	005733367		**1**	STOP	BUTEE STOP	ANSCHLAG PARO
50	000245837		**1**	WASHER	RONDELLE RONDELLA	SCHEIBE ARANDELA
51	7600101501		**1**	STUD	GOUJON SPINOTTO FILETT.	STEHBOLZEN ESPARRAGO ROSCA.
52	006053774		**1**	NUT	ECROU DADO	MUTTER TUERCA
53	006011489		**2**	NUT	ECROU DADO	MUTTER TUERCA
54	7600440004		**1**	KIT,DIFFERENTIAL	JEU DIFFERENTIEL KIT DIFFERENZIAL	SATZDIFFERENTIAL JGO.DIFERENCIAL.
55*	001051421	➡ R083041	**1**	O RING	JOINT TORIQUE GIUNTO DI TENUTA	O-RING JUNTA TOROIDAL

Front Axle 4 Wheel Drive	**Differential**	**60-95**	**With Suspended Front Axle**
Essieu Avant 4 Roues Motrices	**Differentiel**		**Avec Pont Avant Suspendu**
Vorderachse Allradantrieb	**Differential**		**Mit Gefedert Vorderaschse**
Assale Anteriore 4 Ruote Motrici	**Differenziale**		**Con Assale Anteriore Sospeso**
Eje Delantero 4 Ruedas Motrices	**Diferencial**		**Con Eje Delantero Suspendido**

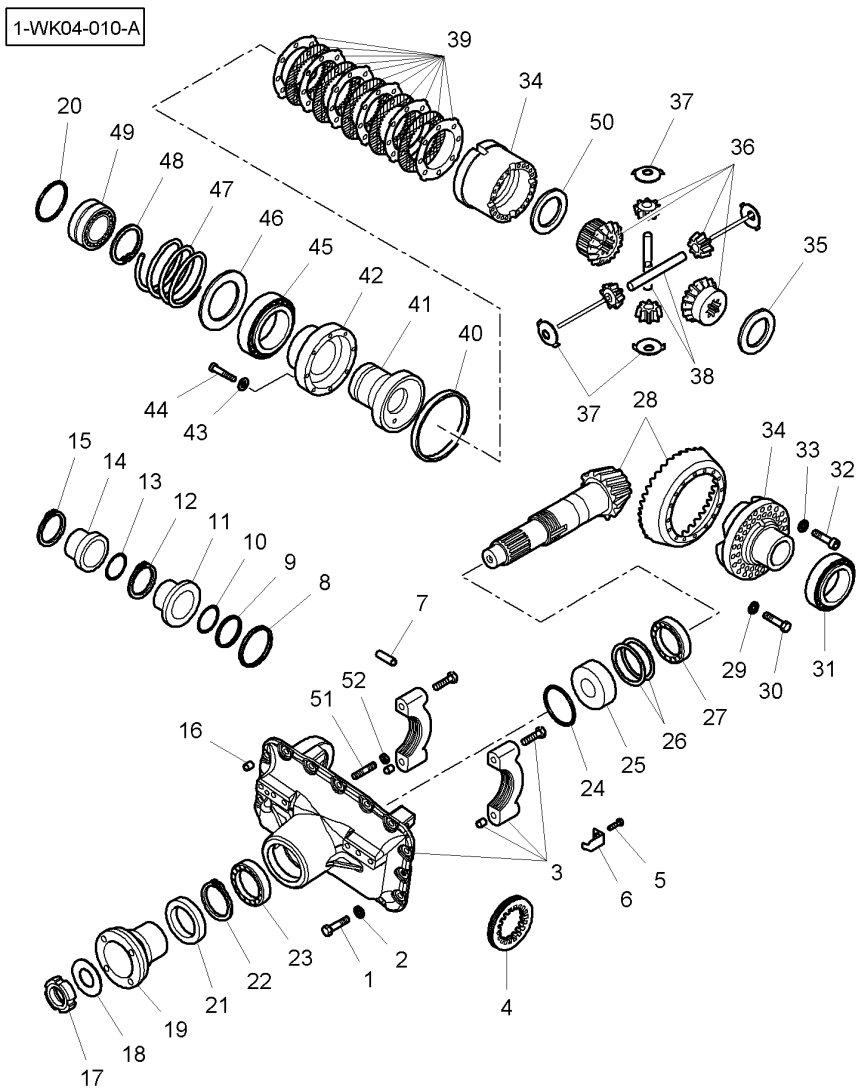

1	3764102M1		**15**	SCREW	VIS VITE	SCHRAUBE TORNILLO
2	011053790		**16**	WASHER	RONDELLE RONDELLA	SCHEIBE ARANDELA
3	7600470501		**1**	SUPPORT	SUPPORT SOPPORTO	TRAGER SOPORTE
4	3765787M1		**1**	NUT	ECROU DADO	MUTTER TUERCA
5	1444071X1		**1**	HEX. SOCK. SCREW	VIS TETE HEX VITE PARKER	ZYLINDERSCHRAUBE TORN.CAB.HUECA
6	3765786M1		**1**	LOCKING PLATE	PLAQUE BLOCAGE PIASTRA DI FERMO	SICH.BLECH PLACA DE BLOCAJE
7	014010327		**1**	DOWEL	PLOT SPINA	ZYLINDERSTIFT CENTRAJE
8	001423359		**1**	SEAL	JOINT ETANCHEITE GIUNTO ROTONDO	DICHTRING JUNTA REDONDA
9	001423360		**1**	SEAL	JOINT ETANCHEITE GIUNTO ROTONDO	DICHTRING JUNTA REDONDA
10	3766055M1		**1**	O RING	JOINT TORIQUE GIUNTO DI TENUTA	O-RING JUNTA TOROIDAL
11	3766054M1		**1**	BUSH	BAGUE BOCCOLA	RING CASQUILLO
12	3766056M1		**1**	CIRCLIP	CIRCLIP ANNELLO ELASTICO	SEEGERING GRAPA CIRCULAR
13	001051564		**1**	BUSH	BAGUE BOCCOLA	RING CASQUILLO
14	3765836M1		**1**	PISTON	PISTON PISTONE	KOLBEN PISTON
15	3765837M1		**1**	RING	ANNEAU ANELLO	RING. ANILLO
16	014013773		**2**	DOWEL	PLOT SPINA	ZYLINDERSTIFT CENTRAJE
17	3765039M1		**1**	NUT	ECROU DADO	MUTTER TUERCA
18	7600401701		**1**	BUSH	BAGUE BOCCOLA	RING CASQUILLO
19	7600470401		**1**	BRIDLE	BRIDE BRIGLIA	LASCHENSPANNBAND BRIDA
20	001051421		**1**	O RING	JOINT TORIQUE GIUNTO DI TENUTA	O-RING JUNTA TOROIDAL
21	7600401201		**1**	SEAL	JOINT ETANCHEITE GIUNTO ROTONDO	DICHTRING JUNTA REDONDA
22	002021812		**1**	SNAPRING	SEGMENT ARRET ANELLO SIEGER	SPRENGRING ANILLA RETENCION
23	000137100		**1**	BEARING ASSY	ROULEMENT CUSCINETTO COMPL	RADIALLAGER RODAMIENTO RAD
24	3765901M1		**1**	O RING	JOINT TORIQUE GIUNTO DI TENUTA	O-RING JUNTA TOROIDAL
25	3765873M1	⧗ 5,80 MM	**X**	SPACER	ENTRETOISE DISTANZIALE	ABSTANDSTUECK DISCO ESPACIADOR
25	3765874M1	⧗ 5,83 MM	**X**	SPACER	ENTRETOISE DISTANZIALE	ABSTANDSTUECK DISCO ESPACIADOR

Front Axle 4 Wheel Drive	**Differential**	**60-95**	**With Suspended Front Axle**
Essieu Avant 4 Roues Motrices	**Differentiel**		**Avec Pont Avant Suspendu**
Vorderachse Allradantrieb	**Differential**		**Mit Gefedert Vorderaschse**
Assale Anteriore 4 Ruote Motrici	**Differenziale**		**Con Assale Anteriore Sospeso**
Eje Delantero 4 Ruedas Motrices	**Diferencial**		**Con Eje Delantero Suspendido**

1-WK04-010-A

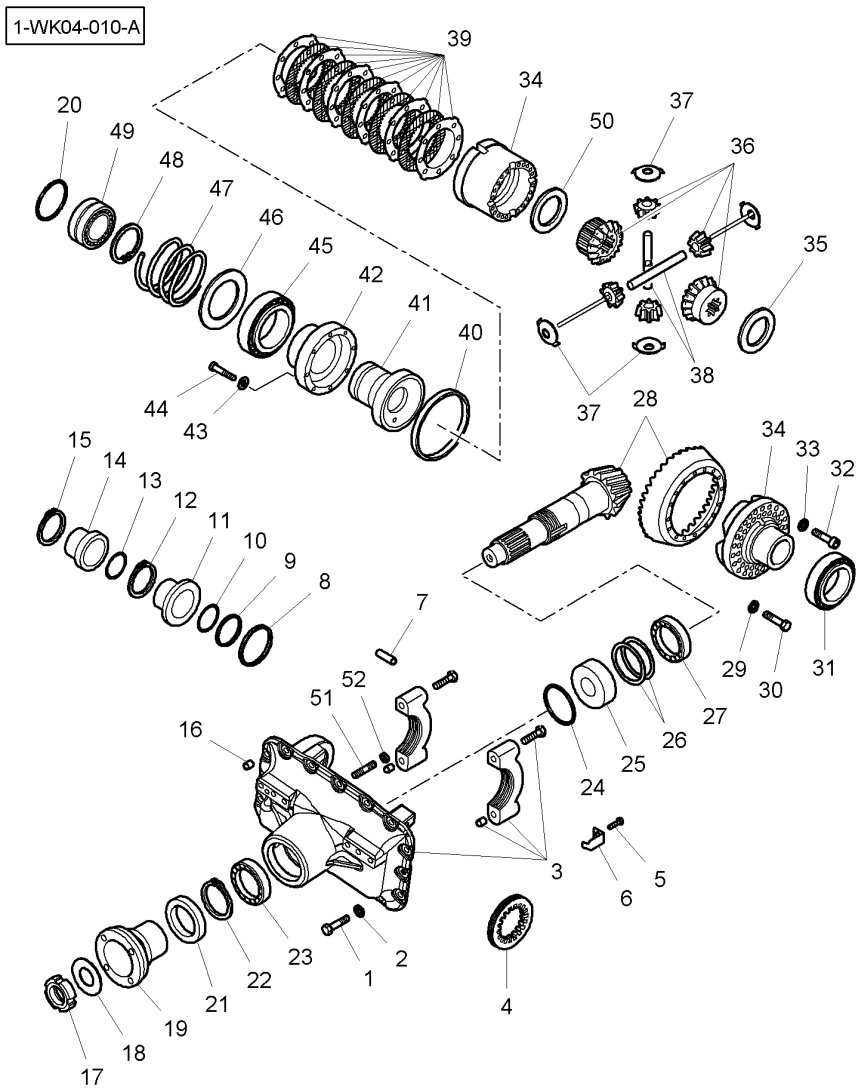

25	3765875M1	⧗ 5,86 MM	X	SPACER	ENTRETOISE DISTANZIALE	ABSTANDSTUECK DISCO ESPACIADOR
25	3765876M1	⧗ 5,89 MM	X	SPACER	ENTRETOISE DISTANZIALE	ABSTANDSTUECK DISCO ESPACIADOR
25	3765877M1	⧗ 5,92 MM	X	SPACER	ENTRETOISE DISTANZIALE	ABSTANDSTUECK DISCO ESPACIADOR
25	3765878M1	⧗ 5,95 MM	X	SPACER	ENTRETOISE DISTANZIALE	ABSTANDSTUECK DISCO ESPACIADOR
25	3765879M1	⧗ 5,98 MM	X	SPACER	ENTRETOISE DISTANZIALE	ABSTANDSTUECK DISCO ESPACIADOR
25	3765880M1	⧗ 6,01 MM	X	SPACER	ENTRETOISE DISTANZIALE	ABSTANDSTUECK DISCO ESPACIADOR
25	3765881M1	⧗ 6,04 MM	X	SPACER	ENTRETOISE DISTANZIALE	ABSTANDSTUECK DISCO ESPACIADOR
25	3765882M1	⧗ 6,07 MM	X	SPACER	ENTRETOISE DISTANZIALE	ABSTANDSTUECK DISCO ESPACIADOR
25	3765883M1	⧗ 6,10 MM	X	SPACER	ENTRETOISE DISTANZIALE	ABSTANDSTUECK DISCO ESPACIADOR
25	3765884M1	⧗ 6,13 MM	X	SPACER	ENTRETOISE DISTANZIALE	ABSTANDSTUECK DISCO ESPACIADOR
25	3765885M1	⧗ 6,16 MM	X	SPACER	ENTRETOISE DISTANZIALE	ABSTANDSTUECK DISCO ESPACIADOR
25	3765886M1	⧗ 6,19 MM	X	SPACER	ENTRETOISE DISTANZIALE	ABSTANDSTUECK DISCO ESPACIADOR
25	3765887M1	⧗ 6,22 MM	X	SPACER	ENTRETOISE DISTANZIALE	ABSTANDSTUECK DISCO ESPACIADOR
25	3765888M1	⧗ 6,25 MM	X	SPACER	ENTRETOISE DISTANZIALE	ABSTANDSTUECK DISCO ESPACIADOR
25	3765889M1	⧗ 6,28 MM	X	SPACER	ENTRETOISE DISTANZIALE	ABSTANDSTUECK DISCO ESPACIADOR
25	3765890M1	⧗ 6,31 MM	X	SPACER	ENTRETOISE DISTANZIALE	ABSTANDSTUECK DISCO ESPACIADOR
25	3765891M1	⧗ 6,34 MM	X	SPACER	ENTRETOISE DISTANZIALE	ABSTANDSTUECK DISCO ESPACIADOR
25	3765892M1	⧗ 6,37 MM	X	SPACER	ENTRETOISE DISTANZIALE	ABSTANDSTUECK DISCO ESPACIADOR
25	3765893M1	⧗ 6,40 MM	X	SPACER	ENTRETOISE DISTANZIALE	ABSTANDSTUECK DISCO ESPACIADOR
25	3765894M1	⧗ 6,43 MM	X	SPACER	ENTRETOISE DISTANZIALE	ABSTANDSTUECK DISCO ESPACIADOR
25	3765895M1	⧗ 6,46 MM	X	SPACER	ENTRETOISE DISTANZIALE	ABSTANDSTUECK DISCO ESPACIADOR
25	3765896M1	⧗ 6,49 MM	X	SPACER	ENTRETOISE DISTANZIALE	ABSTANDSTUECK DISCO ESPACIADOR
25	3765897M1	⧗ 6,52 MM	X	SPACER	ENTRETOISE DISTANZIALE	ABSTANDSTUECK DISCO ESPACIADOR
25	3765898M1	⧗ 6,55 MM	X	SPACER	ENTRETOISE DISTANZIALE	ABSTANDSTUECK DISCO ESPACIADOR
25	3765899M1	⧗ 6,58 MM	X	SPACER	ENTRETOISE DISTANZIALE	ABSTANDSTUECK DISCO ESPACIADOR
25	3765900M1	⧗ 7,00 MM	X	SPACER	ENTRETOISE DISTANZIALE	ABSTANDSTUECK DISCO ESPACIADOR

Front Axle 4 Wheel Drive	**Differential**	**60-95**	**With Suspended Front Axle**
Essieu Avant 4 Roues Motrices	**Differentiel**		**Avec Pont Avant Suspendu**
Vorderachse Allradantrieb	**Differential**		**Mit Gefedert Vorderaschse**
Assale Anteriore 4 Ruote Motrici	**Differenziale**		**Con Assale Anteriore Sospeso**
Eje Delantero 4 Ruedas Motrices	**Diferencial**		**Con Eje Delantero Suspendido**

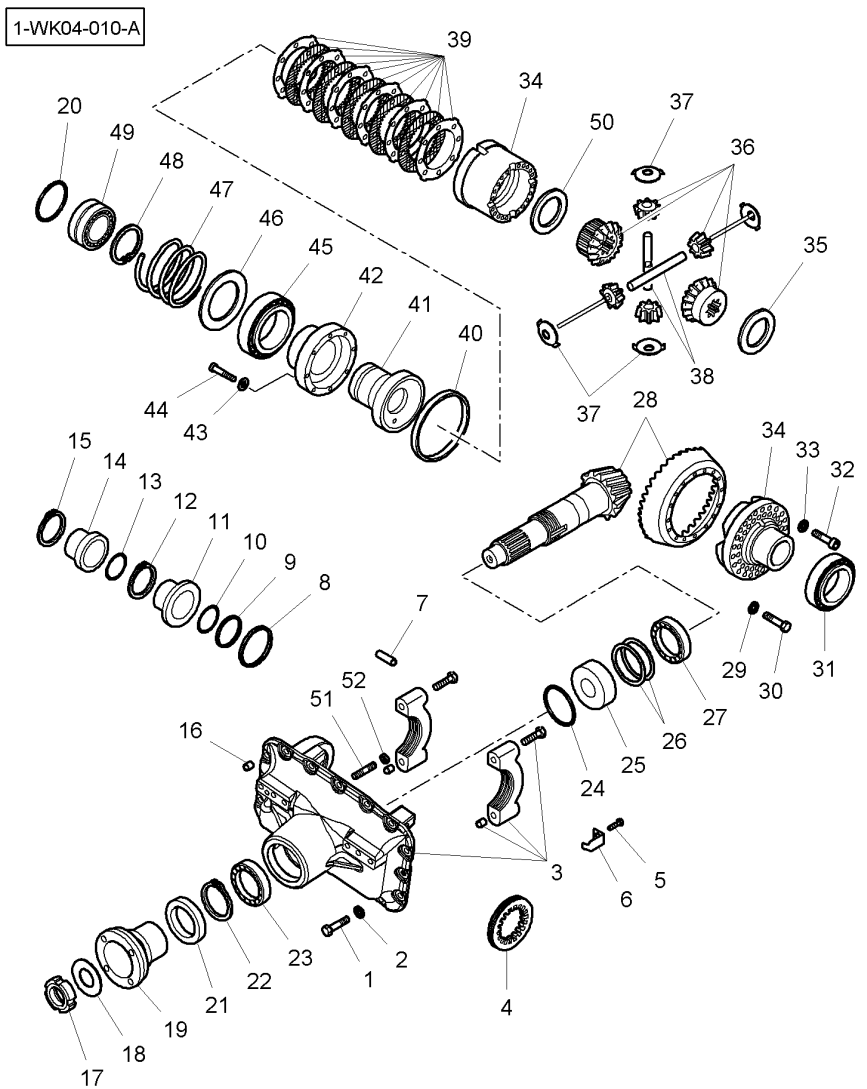

26	000245025A	⧗ 0.10 MM	**X**	CHOCK	CALE PASSACAVO	UNTERLEG-KEIL CALZA
26	000245027A	⧗ 0.30 MM	**X**	CHOCK	CALE PASSACAVO	UNTERLEG-KEIL CALZA
26	000245028A	⧗ 0.50 MM	**X**	CHOCK	CALE PASSACAVO	UNTERLEG-KEIL CALZA
27	005093366		**1**	BEARING ASSY	ROULEMENT CUSCINETTO COMPL	RADIALLAGER RODAMIENTO RAD
28	7600450101		**1**	KIT, BEVEL GEAR	COUPLE CONIQUE KIT COPPIA CONIC	KEGELRADSATZ CORONA Y PINON
29	011141455		**18**	WASHER	RONDELLE RONDELLA	SCHEIBE ARANDELA
30	016010786		**18**	SCREW	VIS VITE	SCHRAUBE TORNILLO
31	005103365		**1**	BEARING ASSY	ROULEMENT CUSCINETTO COMPL	RADIALLAGER RODAMIENTO RAD
32	000057970		**12**	SCREW	VIS VITE	SCHRAUBE TORNILLO
33	011041318		**12**	WASHER	RONDELLE RONDELLA	SCHEIBE ARANDELA
34	3766061M91		**1**	HOUSING	CARTER CARCASSA	GEHAEUSE ALOJAMIENTO
35	000245680		**1**	WASHER	RONDELLE RONDELLA	SCHEIBE ARANDELA
36	7600470201		**1**	GEAR	ENGRENAGE INGRANAGGIO	ZAHNRAD ENGRANAJE
37	7600401401		**4**	WASHER	RONDELLE RONDELLA	SCHEIBE ARANDELA
38	000215040A		**2**	CLEVIS PIN	AXE PERNO D'ATTACCO	SPLINTBOLZEN BULON CILINDRICO
39	000727512A		**1**	CLUTCH DISC	DISQUE EMBRAYAGE DISCO FRIZIONE	KUPPLUNGSSCHEIBE DISCO DE EMBRAGU
40	000139339		**1**	BUSH	BAGUE BOCCOLA	RING CASQUILLO
41	7600400401		**1**	BRIDLE	BRIDE BRIGLIA	LASCHENSPANNBAND BRIDA
42	3766063M1		**1**	COVER	COUVERCLE COPERCHIO	ABDECKUNG. CUBIERTA
43	011043431		**18**	WASHER	RONDELLE RONDELLA	SCHEIBE ARANDELA
44	3766065M1		**18**	SCREW	VIS VITE	SCHRAUBE TORNILLO
45	G816300020180		**1**	CUP AND CONE	CUVETTE ET CONE COPPA E CONO	KEGELROLLENLAGER PISTA Y CONO
46	000345621	⧗ 0.50 MM	**3**	CHOCK	CALE PASSACAVO	UNTERLEG-KEIL CALZA
46	000345622	⧗ 0.20 MM	**1**	CHOCK	CALE PASSACAVO	UNTERLEG-KEIL CALZA
46	000345623A	⧗ 0.10 MM	**1**	CHOCK	CALE PASSACAVO	UNTERLEG-KEIL CALZA
47	7600400501		**1**	SPRING	RESSORT MOLLA	FEDER MUELLE

Front Axle 4 Wheel Drive	**Differential**	**60-95**	**With Suspended Front Axle**
Essieu Avant 4 Roues Motrices	**Differentiel**		**Avec Pont Avant Suspendu**
Vorderachse Allradantrieb	**Differential**		**Mit Gefedert Vorderaschse**
Assale Anteriore 4 Ruote Motrici	**Differenziale**		**Con Assale Anteriore Sospeso**
Eje Delantero 4 Ruedas Motrices	**Diferencial**		**Con Eje Delantero Suspendido**

1-WK04-010-A

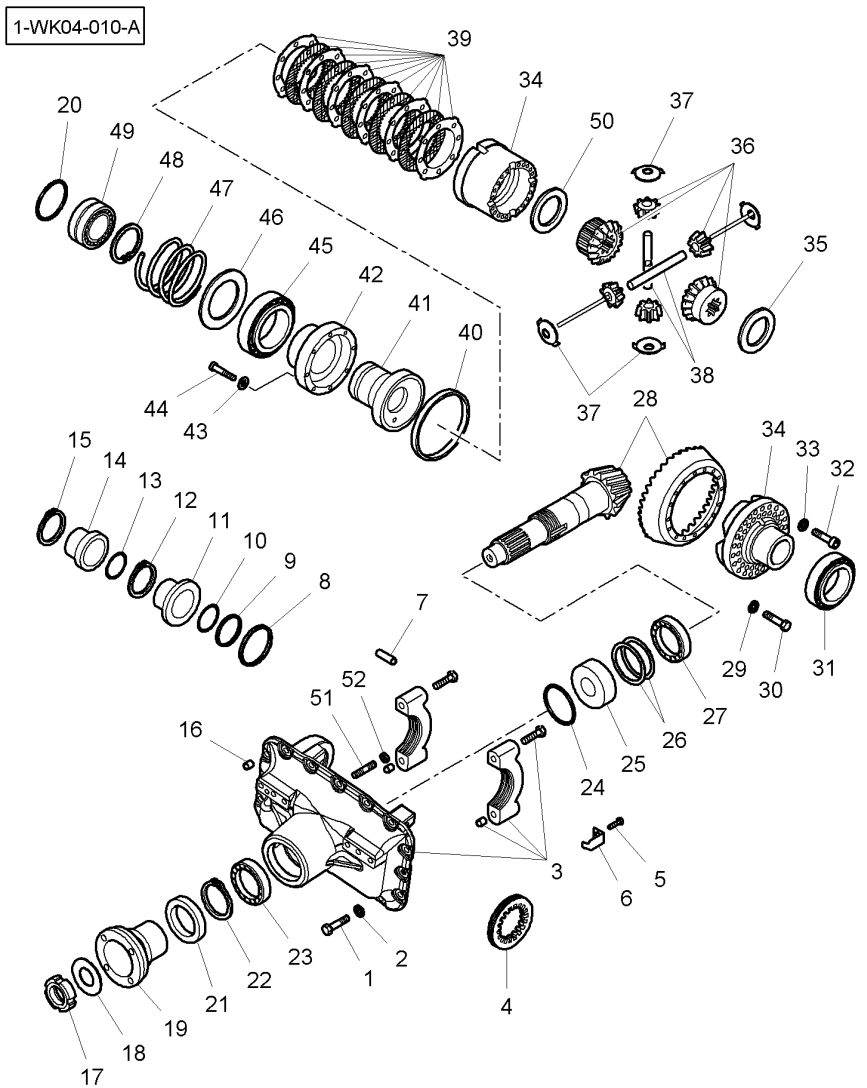

48	002011794	**1**	SNAPRING	SEGMENT ARRET ANELLO SIEGER	SPRENGRING ANILLA RETENCION
49	005733367	**1**	STOP	BUTEE STOP	ANSCHLAG PARO
50	000245837	**1**	WASHER	RONDELLE RONDELLA	SCHEIBE ARANDELA
51	7600101501	**1**	STUD	GOUJON SPINOTTO FILETT.	STEHBOLZEN ESPARRAGO ROSCA.
52	006053774	**1**	NUT	ECROU DADO	MUTTER TUERCA

Front Axle 4 Wheel Drive **Essieu Avant 4 Roues Motrices** **Vorderachse Allradantrieb** **Assale Anteriore 4 Ruote Motrici** **Eje Delantero 4 Ruedas Motrices**	**Final Drive** **Reduction Finale** **Endantrieb** **Riduzione Finale** **Accionamiento Final**	**60-100**	**Front Axle Fixed** **Pont Avant Fixe** **Dtarr Vorderaschse** **Assale Anteriore Fisso** **Eje Delantero Fijo**

1-WK05-009-B

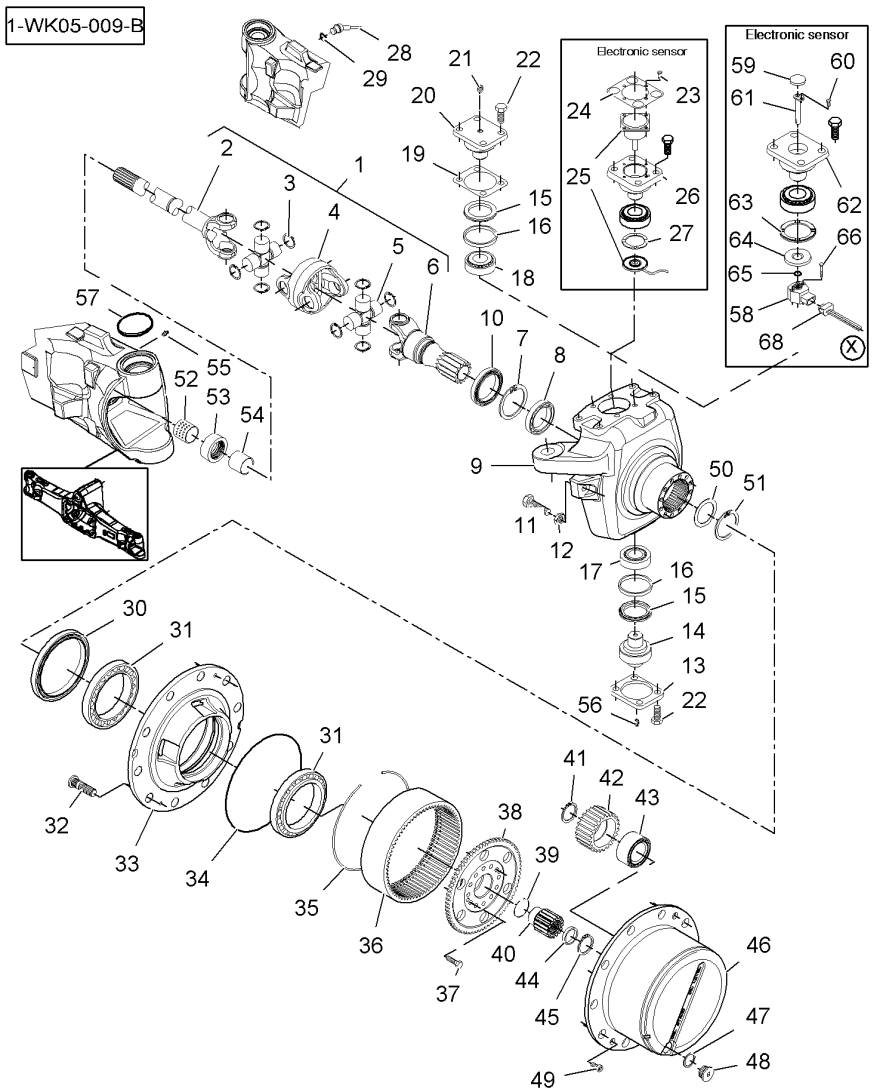

1	3766060M91		▶	**1**	UNIVERSAL JOINT	CARDAN GIUNTO UNIVERSAL	KARDANGELENK JUNTA UNIVERSAL
1	3766059M91		◀	**1**	UNIVERSAL JOINT	CARDAN GIUNTO UNIVERSAL	KARDANGELENK JUNTA UNIVERSAL
2	7600645003	1	▶	**1**	SHAFT	ARBRE ALBERO	WELLE ARBOL
2	7600645005	1	◀	**1**	SHAFT	ARBRE ALBERO	WELLE ARBOL
3	002020903	1		**8**	SNAPRING	SEGMENT ARRET ANELLO SIEGER	SPRENGRING ANILLA RETENCION
4	3766169M91	1		**1**	KNUCKLE	NOIX ARTICOLAZIONE	GELENK CHARNELA.
5	000513236	1	➡ R083040	**2**	SPIDER	CROISILLON CROCIERA CARDAN.	KREUZSTUECK CRUCETA
5*	000513236A	1	➡ R083041	**2**	SPIDER	CROISILLON CROCIERA CARDAN.	KREUZSTUECK CRUCETA
6	7600645004	1		**1**	SHAFT	ARBRE ALBERO	WELLE ARBOL
7	002023410			**2**	SNAPRING	SEGMENT ARRET ANELLO SIEGER	SPRENGRING ANILLA RETENCION
8	005013296			**2**	BEARING ASSY	ROULEMENT CUSCINETTO COMPL	RADIALLAGER RODAMIENTO RAD
9	7600601801		◀	**1**	HOUSING	CARTER CARCASSA	GEHAEUSE ALOJAMIENTO
9	7600601701		▶	**1**	HOUSING	CARTER CARCASSA	GEHAEUSE ALOJAMIENTO
10	7600601602			**2**	SEAL	JOINT ETANCHEITE GIUNTO ROTONDO	DICHTRING JUNTA REDONDA
11	7600601501			**4**	SCREW	VIS VITE	SCHRAUBE TORNILLO
12	000058321			**4**	NUT	ECROU DADO	MUTTER TUERCA
13	000145120			**2**	SUPPORT	SUPPORT SOPPORTO	TRAGER SOPORTE
14	3766058M1			**2**	PIN	GOUPILLE COPPIGLIA	STIFT PASADOR
15	7500604601			**4**	SEAL	JOINT ETANCHEITE GIUNTO ROTONDO	DICHTRING JUNTA REDONDA
16	7500604701			**4**	SPACER	ENTRETOISE DISTANZIALE	ABSTANDSTUECK DISCO ESPACIADOR
17	3766050M1			**2**	BEARING ASSY	ROULEMENT CUSCINETTO COMPL	RADIALLAGER RODAMIENTO RAD
18	005100497			**2**	BEARING ASSY	ROULEMENT CUSCINETTO COMPL	RADIALLAGER RODAMIENTO RAD
19	F718301020290		⧗ 0.2 MM	**1**	DISC	DISQUE DISCO	SCHEIBE DISCO
19	F718301020300		⧗ 0.5 MM	**1**	DISC	DISQUE DISCO	SCHEIBE DISCO
20	7500604401		➡ P147053	**1**	PIVOT	PIVOT CARDINE	DREHZAPFEN. PIVOTE
21	016083444			**1**	SCREW	VIS VITE	SCHRAUBE TORNILLO

Front Axle 4 Wheel Drive Essieu Avant 4 Roues Motrices Vorderachse Allradantrieb Assale Anteriore 4 Ruote Motrici Eje Delantero 4 Ruedas Motrices	Final Drive Reduction Finale Endantrieb Riduzione Finale Accionamiento Final	**60-100**	**Front Axle Fixed** **Pont Avant Fixe** **Dtarr Vorderaschse** **Assale Anteriore Fisso** **Eje Delantero Fijo**

1-WK05-009-B

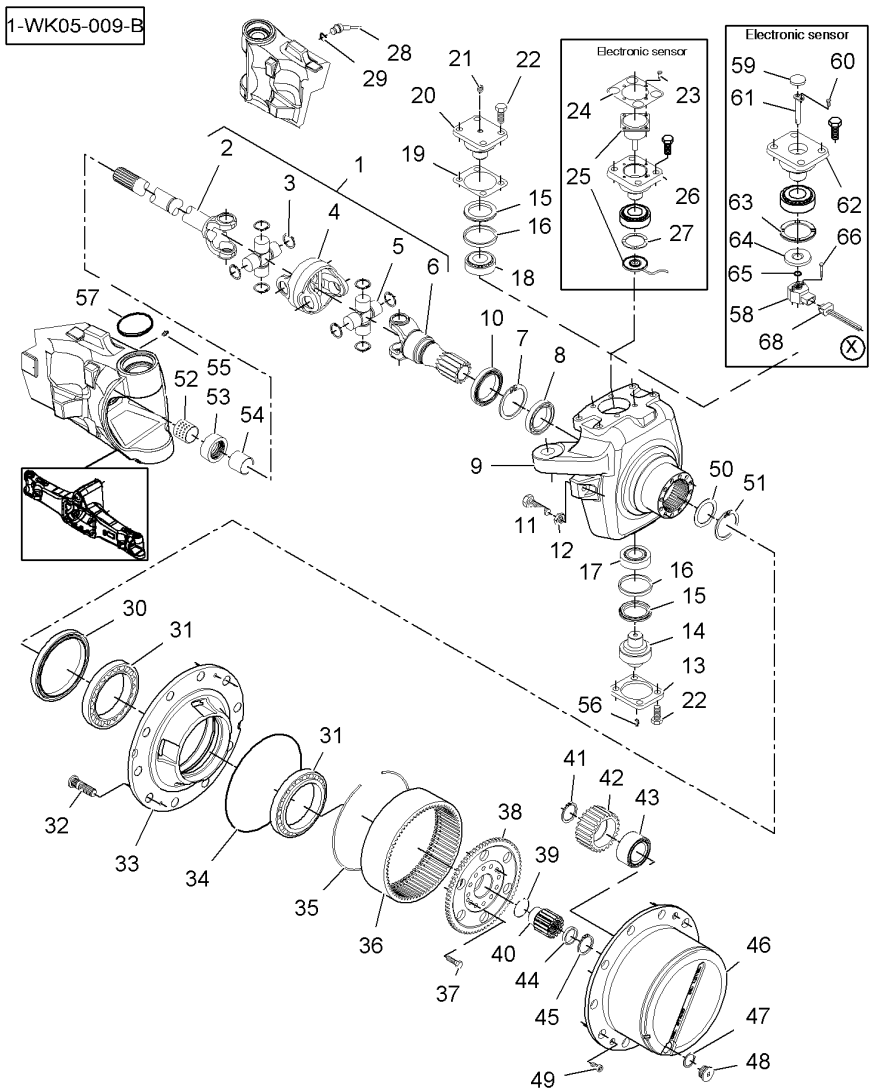

22	016010786	➡ P147052	**20**	SCREW	VIS VITE	SCHRAUBE TORNILLO
22*	016010786	➡ P147053	**16**	SCREW	VIS VITE	SCHRAUBE TORNILLO
23	016010367	➡ G-ITA-317918	**4**	SCREW	VIS VITE	SCHRAUBE TORNILLO
24	7450600901	➡ G-ITA-317918	**1**	COVER	COUVERCLE COPERCHIO	ABDECKUNG. CUBIERTA
25	7450661202	➡ G-ITA-317918	**1**	TRANSDUCER	CAPTEUR TRANSDUCER	NABENTRIEB. TRANSDUCER
26	7500604501	➡ G-ITA-317918	**1**	PIVOT	PIVOT CARDINE	DREHZAPFEN. PIVOTE
27	7500604801	➡ G-ITA-317918	**1**	WASHER	RONDELLE RONDELLA	SCHEIBE ARANDELA
28	7450100301	➡ G-ITA-317918	**1**	CONNECTORS	CONNECTEUR MORSETTI	KABELVERBINDER CONECTADORES
29	001051577	➡ G-ITA-317918	**1**	O RING	JOINT TORIQUE GIUNTO DI TENUTA	O-RING JUNTA TOROIDAL
30	000051867		**2**	SEAL	JOINT ETANCHEITE GIUNTO ROTONDO	DICHTRING JUNTA REDONDA
31	005101427		**4**	BEARING ASSY	ROULEMENT CUSCINETTO COMPL	RADIALLAGER RODAMIENTO RAD
32	000057061		**24**	STUD	GOUJON SPINOTTO FILETT.	STEHBOLZEN ESPARRAGO ROSCA.
33	7600600601		**2**	WHEEL HUB	MOYEU DE ROUE MOZZO DI RUOTA	RADNABE CUBO DE RUEDA
34	001053338		**2**	O RING	JOINT TORIQUE GIUNTO DI TENUTA	O-RING JUNTA TOROIDAL
35	7600601401		**2**	SNAPRING	SEGMENT ARRET ANELLO SIEGER	SPRENGRING ANILLA RETENCION
36	7600600801		**2**	ANNULAR GEAR	COURONNE CORONA DENTATA	ZAHNKRANZ ENGRANAJE ANULAR
37	3764103M1		**24**	SCREW	VIS VITE	SCHRAUBE TORNILLO
38	7600600901		**2**	SUPPORT	SUPPORT SOPPORTO	TRAGER SOPORTE
39	002072756		**2**	SNAPRING	SEGMENT ARRET ANELLO SIEGER	SPRENGRING ANILLA RETENCION
40	7600601001		**2**	PLANET	PLANETAIRE PLANETARIO	PLANETENRAD PLANETARIO
41	002143202		**8**	SEAL	JOINT ETANCHEITE GIUNTO ROTONDO	DICHTRING JUNTA REDONDA
42	7600601101		**8**	GEAR	ENGRENAGE INGRANAGGIO	ZAHNRAD ENGRANAJE
43	2900601303	⇨ 7600601201	**8**	BEARING ASSY	ROULEMENT CUSCINETTO COMPL	RADIALLAGER RODAMIENTO RAD
44	7600601302		**2**	BUSH	BAGUE BOCCOLA	RING CASQUILLO
45	002011260		**2**	CIRCLIP	CIRCLIP ANNELLO ELASTICO	SEEGERING GRAPA CIRCULAR
46	7600600701		**2**	CARRIER	PORTE SATELLITES SUPPORTO SATELL.	TRAEGER PORTADOR

Front Axle 4 Wheel Drive **Essieu Avant 4 Roues Motrices** **Vorderachse Allradantrieb** **Assale Anteriore 4 Ruote Motrici** **Eje Delantero 4 Ruedas Motrices**	**Final Drive** **Reduction Finale** **Endantrieb** **Riduzione Finale** **Accionamiento Final**	**60-100**	**Front Axle Fixed** **Pont Avant Fixe** **Dtarr Vorderaschse** **Assale Anteriore Fisso** **Eje Delantero Fijo**

1-WK05-009-B

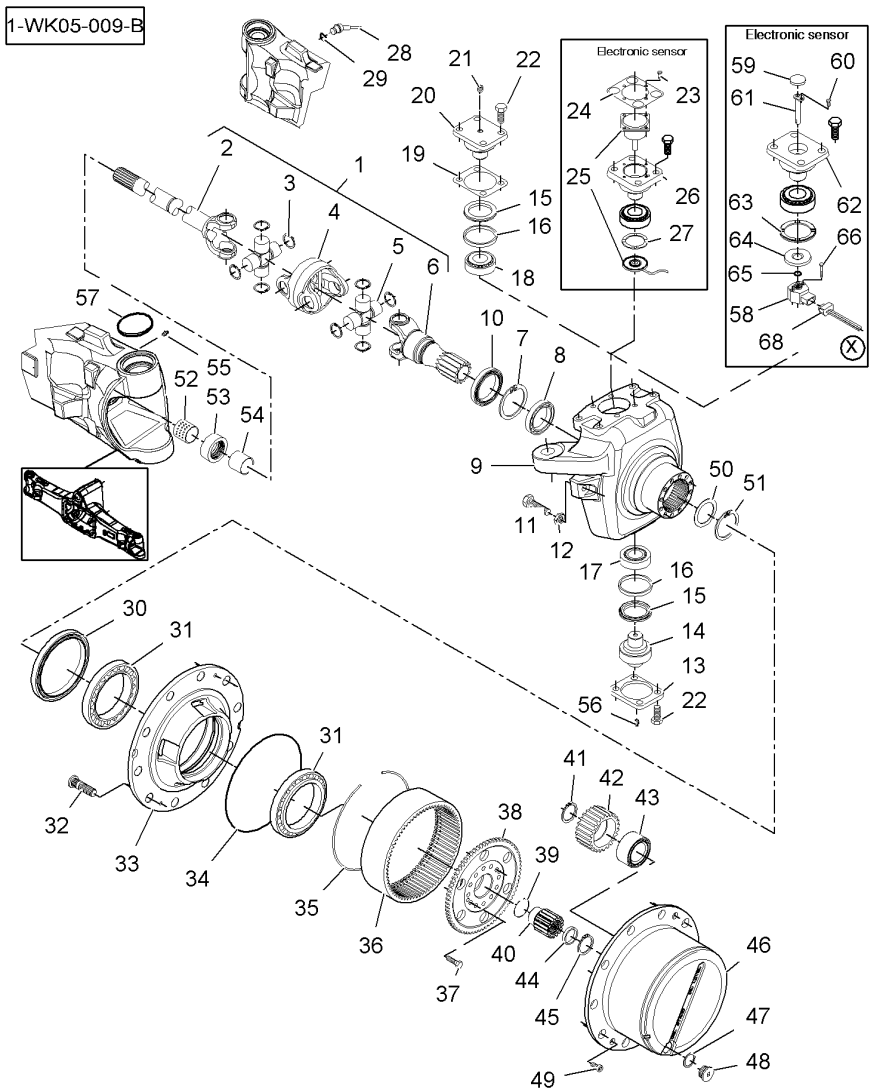

47	X540007678000		**2**	RING	ANNEAU ANELLO	RING. ANILLO
48	385300020130		**2**	PLUG	BOUCHON TAPPO	STOPFEN TAPON
49	000057073		**4**	SCREW	VIS VITE	SCHRAUBE TORNILLO
50	000245560B		**2**	WASHER	RONDELLE RONDELLA	SCHEIBE ARANDELA
51	002013405		**2**	SNAPRING	SEGMENT ARRET ANELLO SIEGER	SPRENGRING ANILLA RETENCION
52*	000339040		**2**	BUSH	BAGUE BOCCOLA	RING CASQUILLO
53	3765756M1		**2**	OIL SEAL	BAGUE ETANCHEITE BOCCOLA PARAOLIO	OELDICHTRING BUJE RETENACEITE
54	F718301020520		**2**	CUP	COUPELLE SCODELLINO	LAUFRING CUBETA
55	339004X1		**2**	GREASE FITTING	GRAISSEUR INGRASSATORE	DRUCKSCHMIERKOPF ENGRASADOR
56	339003X1		**2**	GREASE FITTING	GRAISSEUR INGRASSATORE	DRUCKSCHMIERKOPF ENGRASADOR
57*	7600101301	➡ G-ITA-317919	**1**	WASHER	RONDELLE RONDELLA	SCHEIBE ARANDELA
58*	7502461001	➡	**1**	SENSOR	DETECTEUR SENSORE	SENSOR DETECTOR
59*	015032885	➡	**1**	PLUG	BOUCHON TAPPO	STOPFEN TAPON
60*	016040843	➡	**1**	SCREW	VIS VITE	SCHRAUBE TORNILLO
61*	7500606101	➡	**1**	CLEVIS PIN	AXE PERNO D'ATTACCO	SPLINTBOLZEN BULON CILINDRICO
62*	7500606002	➡	**1**	PIVOT	PIVOT CARDINE	DREHZAPFEN. PIVOTE
63*	7600101301		**1**	WASHER	RONDELLE RONDELLA	SCHEIBE ARANDELA
64*	7300604302	➡	**1**	COVER	COUVERCLE COPERCHIO	ABDECKUNG. CUBIERTA
65*	001051577		**1**	O RING	JOINT TORIQUE GIUNTO DI TENUTA	O-RING JUNTA TOROIDAL
66*	016063718	➡	**2**	SCREW	VIS VITE	SCHRAUBE TORNILLO
68*	7500660002	➡	**1**	CONNECTORS	CONNECTEUR MORSETTI	KABELVERBINDER CONECTADORES

Front Axle 4 Wheel Drive Essieu Avant 4 Roues Motrices Vorderachse Allradantrieb Assale Anteriore 4 Ruote Motrici Eje Delantero 4 Ruedas Motrices	Final Drive Reduction Finale Endantrieb Riduzione Finale Accionamiento Final	60-105	With Suspended Front Axle Avec Pont Avant Suspendu Mit Gefedert Vorderaschse Con Assale Anteriore Sospeso Con Eje Delantero Suspendido

PLANCHES EN COURS D'ILLUSTRATION

1	3766060M91	▶		1	UNIVERSAL JOINT	CARDAN GIUNTO UNIVERSAL	KARDANGELENK JUNTA UNIVERSAL
1	3766059M91	◀		1	UNIVERSAL JOINT	CARDAN GIUNTO UNIVERSAL	KARDANGELENK JUNTA UNIVERSAL
2	7600645003	1 ▶		1	SHAFT	ARBRE ALBERO	WELLE ARBOL
2	7600645005	1 ◀		1	SHAFT	ARBRE ALBERO	WELLE ARBOL
3	002020903	1		1	SNAPRING	SEGMENT ARRET ANELLO SIEGER	SPRENGRING ANILLA RETENCION
4	3766169M91	1		1	KNUCKLE	NOIX ARTICOLAZIONE	GELENK CHARNELA.
5	000513236	1		2	SPIDER	CROISILLON CROCIERA CARDAN.	KREUZSTUECK CRUCETA
6	7600645004	1		1	SHAFT	ARBRE ALBERO	WELLE ARBOL
7	002023410			2	SNAPRING	SEGMENT ARRET ANELLO SIEGER	SPRENGRING ANILLA RETENCION
8	005013296			2	BEARING ASSY	ROULEMENT CUSCINETTO COMPL	RADIALLAGER RODAMIENTO RAD
9	000245560B			2	WASHER	RONDELLE RONDELLA	SCHEIBE ARANDELA
10	002013405			2	SNAPRING	SEGMENT ARRET ANELLO SIEGER	SPRENGRING ANILLA RETENCION
11	005100497			2	BEARING ASSY	ROULEMENT CUSCINETTO COMPL	RADIALLAGER RODAMIENTO RAD
12	7500604701			4	SPACER	ENTRETOISE DISTANZIALE	ABSTANDSTUECK DISCO ESPACIADOR
13	7500604601			4	SEAL	JOINT ETANCHEITE GIUNTO ROTONDO	DICHTRING JUNTA REDONDA
14	3766050M1			2	BEARING ASSY	ROULEMENT CUSCINETTO COMPL	RADIALLAGER RODAMIENTO RAD
15	F718301020290	⧗	0.2 MM	1	DISC	DISQUE DISCO	SCHEIBE DISCO
15	F718301020300	⧗	0.5 MM	1	DISC	DISQUE DISCO	SCHEIBE DISCO
16	7500604401			1	PIVOT	PIVOT CARDINE	DREHZAPFEN. PIVOTE
17	016083444			2	SCREW	VIS VITE	SCHRAUBE TORNILLO
18	339004X1			2	GREASE FITTING	GRAISSEUR INGRASSATORE	DRUCKSCHMIERKOPF ENGRASADOR
19	016010786			16	SCREW	VIS VITE	SCHRAUBE TORNILLO
20	339003X1			2	GREASE FITTING	GRAISSEUR INGRASSATORE	DRUCKSCHMIERKOPF ENGRASADOR
21	3766058M1			2	PIN	GOUPILLE COPPIGLIA	STIFT PASADOR
22	000145120			2	SUPPORT	SUPPORT SOPPORTO	TRAGER SOPORTE
23	7600601801	◀		1	HOUSING	CARTER CARCASSA	GEHAEUSE ALOJAMIENTO

Front Axle 4 Wheel Drive Essieu Avant 4 Roues Motrices Vorderachse Allradantrieb Assale Anteriore 4 Ruote Motrici Eje Delantero 4 Ruedas Motrices	Final Drive Reduction Finale Endantrieb Riduzione Finale Accionamiento Final	60-105	With Suspended Front Axle Avec Pont Avant Suspendu Mit Gefedert Vorderaschse Con Assale Anteriore Sospeso Con Eje Delantero Suspendido

PLANCHES EN COURS D'ILLUSTRATION

23	7600601701	▶	1	HOUSING	CARTER CARCASSA	GEHAEUSE ALOJAMIENTO
24	2900601303		8	BEARING ASSY	ROULEMENT CUSCINETTO COMPL	RADIALLAGER RODAMIENTO RAD
25	7600601501		4	SCREW	VIS VITE	SCHRAUBE TORNILLO
26	000058321		4	NUT	ECROU DADO	MUTTER TUERCA
27	385300020130		2	PLUG	BOUCHON TAPPO	STOPFEN TAPON
28	X540007678000		2	RING	ANNEAU ANELLO	RING. ANILLO
29	7600600701		2	CARRIER	PORTE SATELLITES SUPPORTO SATELL.	TRAEGER PORTADOR
30	000057073		4	SCREW	VIS VITE	SCHRAUBE TORNILLO
31	3764103M1		24	SCREW	VIS VITE	SCHRAUBE TORNILLO
32	7600601001		2	PLANET	PLANETAIRE PLANETARIO	PLANETENRAD PLANETARIO
33	7600601101		8	GEAR	ENGRENAGE INGRANAGGIO	ZAHNRAD ENGRANAJE
34	002072756		2	SNAPRING	SEGMENT ARRET ANELLO SIEGER	SPRENGRING ANILLA RETENCION
35	002143202		8	SEAL	JOINT ETANCHEITE GIUNTO ROTONDO	DICHTRING JUNTA REDONDA
36	7600600901		2	SUPPORT	SUPPORT SOPPORTO	TRAGER SOPORTE
37	7600600801		2	ANNULAR GEAR	COURONNE CORONA DENTATA	ZAHNKRANZ ENGRANAJE ANULAR
38	7600601401		2	SNAPRING	SEGMENT ARRET ANELLO SIEGER	SPRENGRING ANILLA RETENCION
39	005101427		4	BEARING ASSY	ROULEMENT CUSCINETTO COMPL	RADIALLAGER RODAMIENTO RAD
40	001053338		2	O RING	JOINT TORIQUE GIUNTO DI TENUTA	O-RING JUNTA TOROIDAL
41	7600600601		2	WHEEL HUB	MOYEU DE ROUE MOZZO DI RUOTA	RADNABE CUBO DE RUEDA
42	000057061		24	STUD	GOUJON SPINOTTO FILETT.	STEHBOLZEN ESPARRAGO ROSCA.
43	000051867		2	SEAL	JOINT ETANCHEITE GIUNTO ROTONDO	DICHTRING JUNTA REDONDA
44	000339040		2	BUSH	BAGUE BOCCOLA	RING CASQUILLO
45	7500606101		1	CLEVIS PIN	AXE PERNO D'ATTACCO	SPLINTBOLZEN BULON CILINDRICO
46	7502461001		1	SENSOR	DETECTEUR SENSORE	SENSOR DETECTOR
47	7302461002		1	CONNECTORS	CONNECTEUR MORSETTI	KABELVERBINDER CONECTADORES
48	7500606002		1	PIVOT	PIVOT CARDINE	DREHZAPFEN. PIVOTE

Front Axle 4 Wheel Drive Essieu Avant 4 Roues Motrices Vorderachse Allradantrieb Assale Anteriore 4 Ruote Motrici Eje Delantero 4 Ruedas Motrices	Final Drive Reduction Finale Endantrieb Riduzione Finale Accionamiento Final	60-105	With Suspended Front Axle Avec Pont Avant Suspendu Mit Gefedert Vorderaschse Con Assale Anteriore Sospeso Con Eje Delantero Suspendido

PLANCHES EN COURS D'ILLUSTRATION

49	015032885		1	PLUG	BOUCHON TAPPO	STOPFEN TAPON
50	001051577		1	O RING	JOINT TORIQUE GIUNTO DI TENUTA	O-RING JUNTA TOROIDAL
51	7600601602		2	SEAL	JOINT ETANCHEITE GIUNTO ROTONDO	DICHTRING JUNTA REDONDA
52	016063718		2	SCREW	VIS VITE	SCHRAUBE TORNILLO
53	7300604302		1	COVER	COUVERCLE COPERCHIO	ABDECKUNG. CUBIERTA
54	016011180		3	SCREW	VIS VITE	SCHRAUBE TORNILLO
55	7300101702		2	COVER	COUVERCLE COPERCHIO	ABDECKUNG. CUBIERTA
56	7450100301		1	CONNECTORS	CONNECTEUR MORSETTI	KABELVERBINDER CONECTADORES
57	7600601302		2	BUSH	BAGUE BOCCOLA	RING CASQUILLO
58	002011260		2	CIRCLIP	CIRCLIP ANNELLO ELASTICO	SEEGERING GRAPA CIRCULAR
59	016040843		1	SCREW	VIS VITE	SCHRAUBE TORNILLO
60	3765756M1		1	OIL SEAL	BAGUE ETANCHEITE BOCCOLA PARAOLIO	OELDICHTRING BUJE RETENACEITE
61	F718301020520		2	CUP	COUPELLE SCODELLINO	LAUFRING CUBETA
62*	7600640009	▶	1	FINAL DRIVE	REDUCTION FINALE RIDUZIONE FINALE	ENDANTRIEB REDUCCION FINAL
62*	7600640010	◀	1	FINAL DRIVE	REDUCTION FINALE RIDUZIONE FINALE	ENDANTRIEB REDUCCION FINAL

Hydraulic Valve Block
Bloc Valve Hydraulique
Hydraulik Ventilblock
Blocco Valvole Idraulico
Bloque Valvulas Hydraulico

60-110

1-WG86-005-A

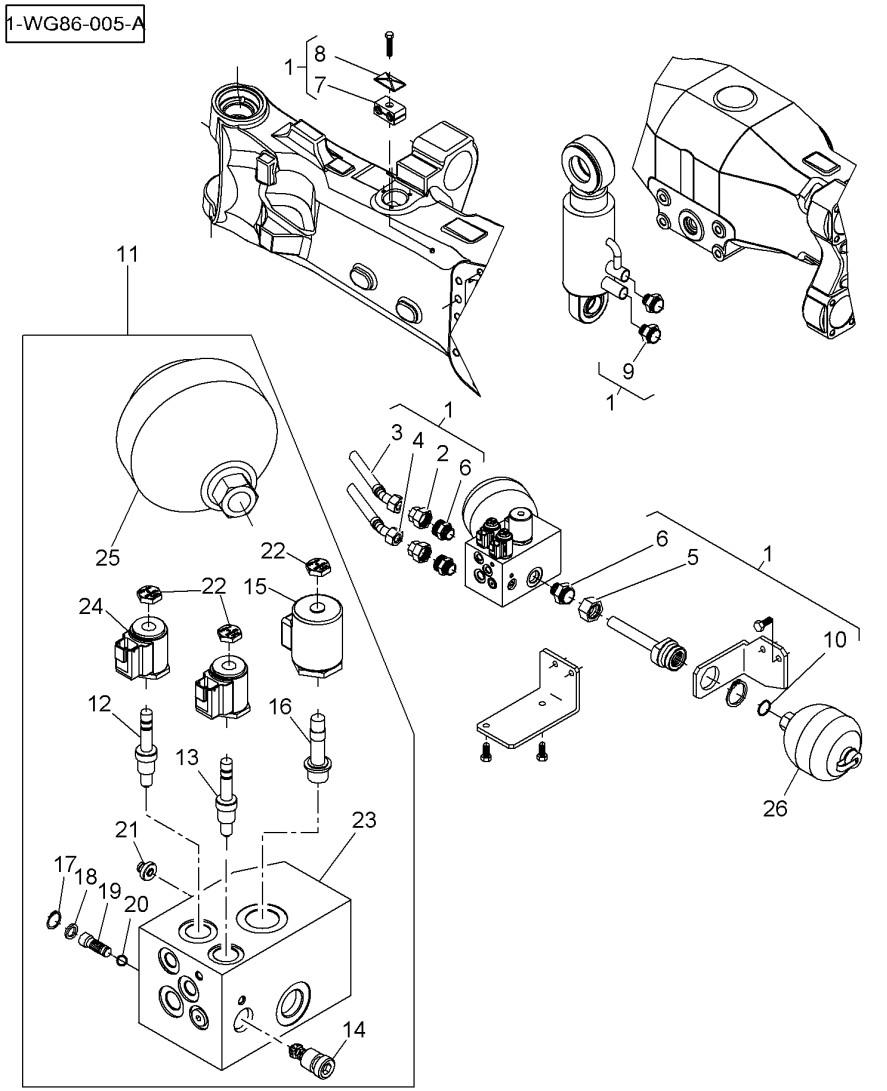

1	7602660203		**1**	PARTS PACK	JEU PIECES PACCO RICAMBI	SATZ TEILE PAQUETE PIEZAS
2	7602600901	1	**2**	UNION	RACCORD RACCORDO	VERSCHRAUBUNG RACOR
3	7602601201	1	**1**	TUBE	TUBE TUBO.	ROHR TUBO.
4	7602601101	1	**1**	TUBE	TUBE TUBO.	ROHR TUBO.
5	7602600601	1	**1**	UNION	RACCORD RACCORDO	VERSCHRAUBUNG RACOR
6	7602600501	1	**3**	UNION	RACCORD RACCORDO	VERSCHRAUBUNG RACOR
7	7602600701	1	**1**	STIRRUP	ETRIER STAFFA	BUEGEL FUACION
8	7602600801	1	**1**	PLATE	PLAQUE PIASTRA	PLATTE PLATO
9	7602600401	1	**2**	UNION	RACCORD RACCORDO	VERSCHRAUBUNG RACOR
10	001054026	1	**2**	O RING	JOINT TORIQUE GIUNTO DI TENUTA	O-RING JUNTA TOROIDAL
11	7602660004		**1**	VALVE	SOUPAPE VALVOLA	VENTIL VALVULA
12	7602601301	11	**1**	VALVE	SOUPAPE VALVOLA	VENTIL VALVULA
13	7602601401	11	**1**	VALVE	SOUPAPE VALVOLA	VENTIL VALVULA
14	7602601501	11	**1**	VALVE	SOUPAPE VALVOLA	VENTIL VALVULA
15	7602601801	11	**1**	COIL	BOBINE BOBINA	SPULE BOBINA
16	7602601701	11	**1**	VALVE	SOUPAPE VALVOLA	VENTIL VALVULA
17	7302601801	11	**1**	SEGMENT	SEGMENT SEGMENTO	SEGMENT SEGMENTO
18	7302601901	11	**1**	WASHER	RONDELLE RONDELLA	SCHEIBE ARANDELA
19	7302602001	11	**1**	SCREW	VIS VITE	SCHRAUBE TORNILLO
20	7302602101	11	**1**	BALL	BILLE SFERA	KUGEL BOLA
21	7602601601	11	**1**	REGULATOR	REGULATEUR REGOLATORE	REGLER REGULADOR
22	7302601201	11	**3**	NUT	ECROU DADO	MUTTER TUERCA
23	7602660401	11	**1**	VALVE	SOUPAPE VALVOLA	VENTIL VALVULA
24	**7302601101**	11	**2**	SOLENOID	SOLENOIDE SOLENOIDE	MAGNETSPULE SOLENOIDE
25	7602660301	11	**1**	ACCUMULATOR	ACCUMULATEUR ACCUMULATORE	AKKUMULATOR ACUMULADOR
26	7602660301		**1**	ACCUMULATOR	ACCUMULATEUR ACCUMULATORE	AKKUMULATOR ACUMULADOR

70

Steering Wheel And Telescopic Column
Volant De Direction Et Colonne Telescopique
Lenkrad Und Saeuleteleskopisch
Volante E Colonna Telescopico
Volante Direccion Y Columna Telescopico

70-5

1-WN04-001-A

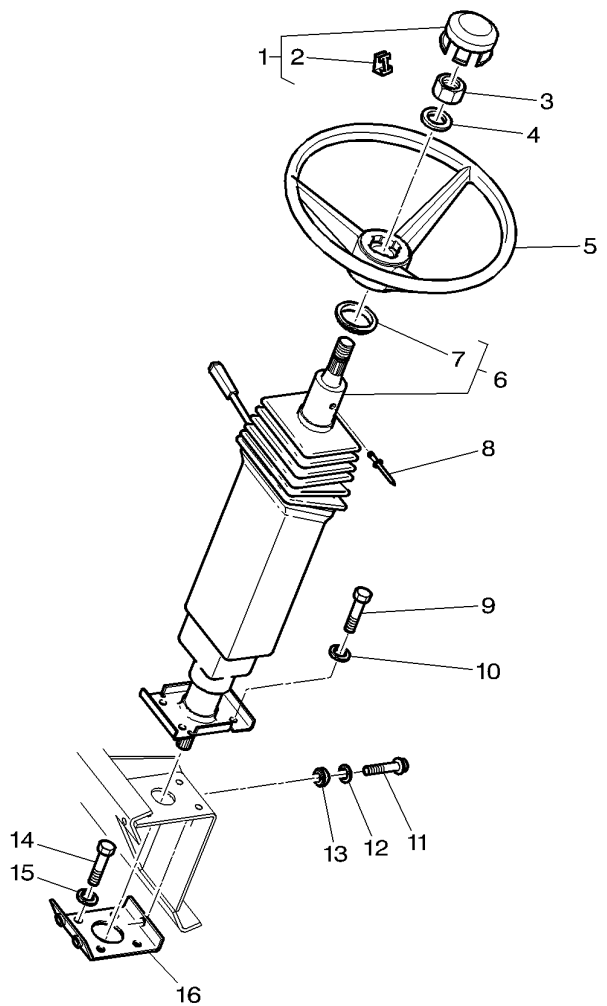

1*	4274202M91		**1**	CAP	CHAPEAU CAPUCHON	KAPPE TAPA
2	3817055M1	1	**2**	CLIP	PATTE D'ATTACHE FERMAGLIO	SCHELLE CLIP
3	339070X1	M14	**1**	NUT	ECROU DADO	MUTTER TUERCA
4	390973X1	∅ 15-28 X 2,5	**1**	WASHER METRIC	RONDELLE METR. RONDELLA METRICO	SCHEIBE METRISCH ARANDELA METRICO
5	3809661M1		**1**	STEERING WHEEL	VOLANT DIRECTION VOLANTE STERZO	LENKRAD VOLANT DIRECCION
6*	4273495M93	70-10 No 1	**1**	STEERING COLUMN	COLONNE DIRECT. ALBERO STERZO	LENKSAEULE COLUMNA DIRECC.
7	3902578M1	6	**1**	GASKET	JOINT GIUNTO PIANO	FLACHDICHTUNG JUNTA PLANA
8	3011268X1	∅ 4 X 7,5	**1**	RIVET	RIVET RIVETTO	NIET REMACHE
9	339124X1	M8 X 16	**4**	HEX. SOCK. SCREW	VIS TETE HEX VITE PARKER	ZYLINDERSCHRAUBE TORN.CAB.HUECA
10	1440921X1	∅ 8-22 X 2	**4**	WASHER METRIC	RONDELLE METR. RONDELLA METRICO	SCHEIBE METRISCH ARANDELA METRICO
11	3009778X1	M10 X 35	**3**	SCREW	VIS VITE	SCHRAUBE TORNILLO
12	3389958M1	∅ 10,5-28 X 2	**6**	WASHER	RONDELLE RONDELLA	SCHEIBE ARANDELA
13	1619912M1		**3**	VIBRATION MOUNT	SILENT BLOC ANTIVIBRANTE	METALLGUM.PUFFER MONTAJE ANTI-VIB
14	339282X1	M10 X 16	**4**	HEX. SOCK. SCREW	VIS TETE HEX VITE PARKER	ZYLINDERSCHRAUBE TORN.CAB.HUECA
15	390734X1	∅ 10-21 X 2	**4**	FLAT WASHER	RONDELLE PLATE RONDELLE PIANA	UNTERLEGSCHEIBEN ARANDELA PLANA
16	3388920M94		**1**	SUPPORT	SUPPORT SOPPORTO	TRAGER SOPORTE

Steering Wheel And Telescopic Column
Volant De Direction Et Colonne Telescopique
Lenkrad Und Saeuleteleskopisch
Volante E Colonna Telescopico
Volante Direccion Y Columna Telescopico

70-10

1-WN04-003-B

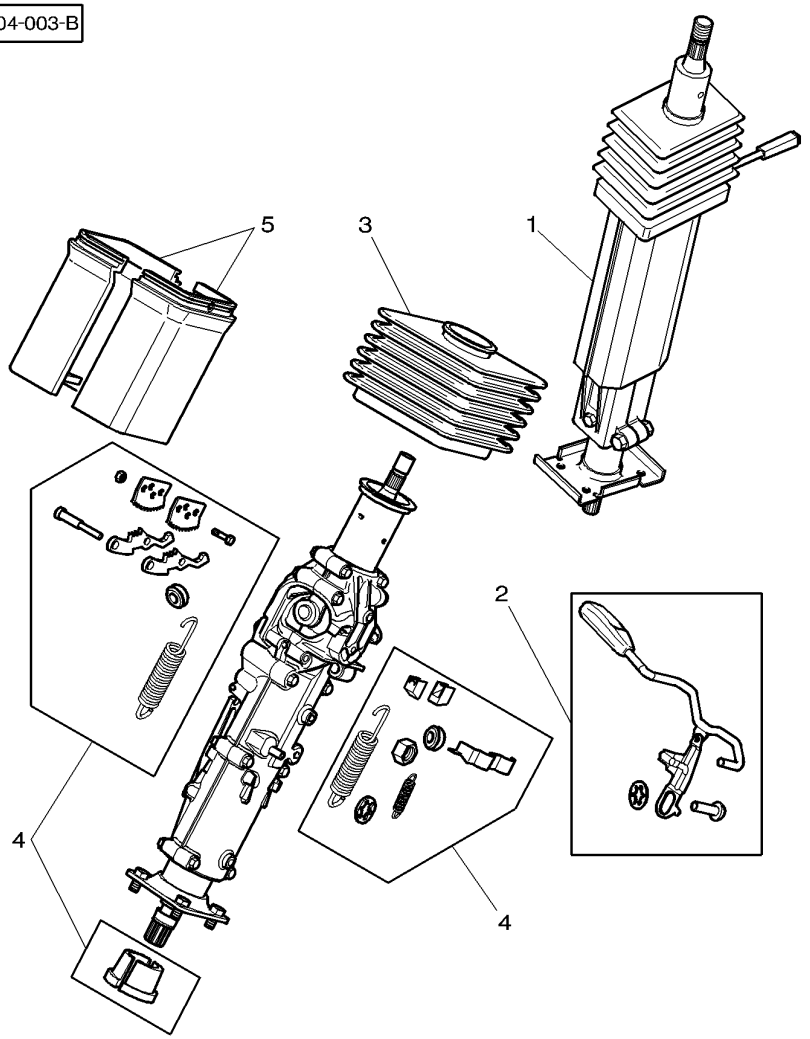

1*	4273495M93		**1**	STEERING COLUMN	COLONNE DIRECT. ALBERO STERZO	LENKSAEULE COLUMNA DIRECC.
2	3907403M91	1 [A]	**1**	KIT, LEVER	JEU LEVIER KIT LEVETTA	SATZ HEBEL JUEGO, PALANCA
3	3907405M91	1	**1**	BELLOWS	SOUFFLET SOFFIETTO	FALTENBALG FUELLE
4	3907402M91	1 [A]	**1**	KIT, REPAIR	JEU REPARATION KIT RIPARAZIONE	REPARATURSATZ JUEGO REPARACION
5	3907404M91	1 [A]	**1**	CASE ASSY	BOITIER CARCASSA COMPLET	GEHAEUSE KPL CAJA COMPLETA

[A] NOT DETAILLED
PAS DETAILLE
NICHT VERKAUFT
PASSO DETTAGLIATO
NO DETALLADO

Lighting Power Shuttle Drive
Commande Eclairage Et Inverseur Sous Couple
Beleuchtung Unter Drehmoment Schaltung
Comando Illuminazione E Sotto Coppia
Mando Alumbrado Y Inversor Sub Par

70-15

1-WN14-001-C

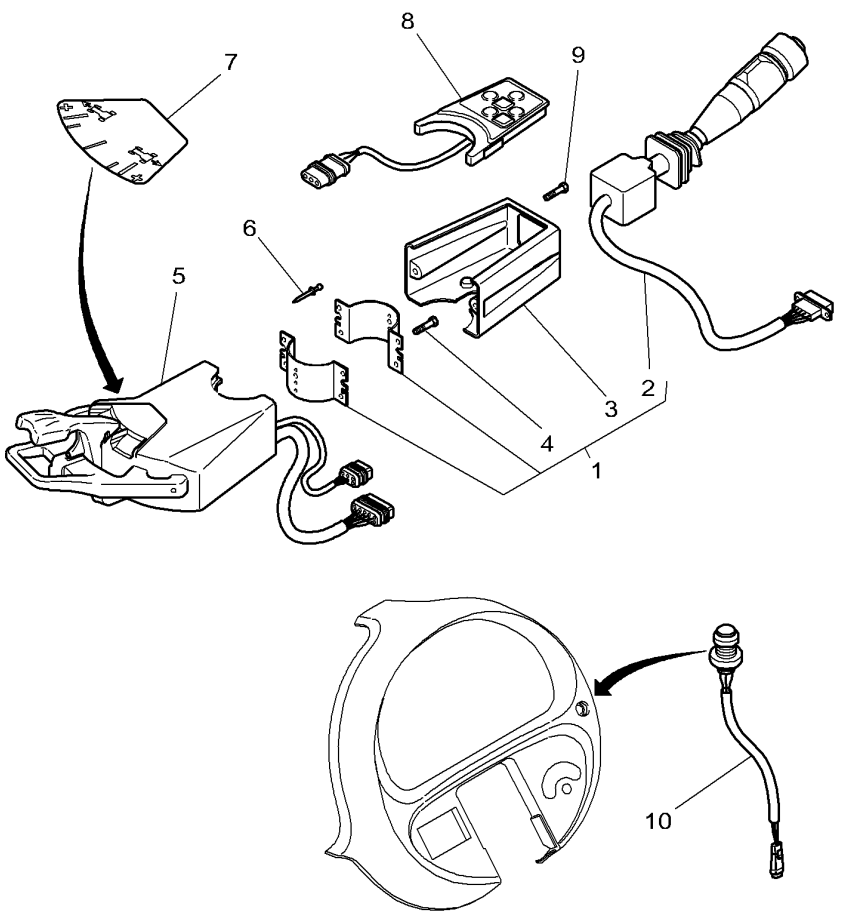

1*	3789725M92		
2*	3713669M4	1	
3*	4271331M1	1	
4*	3713785M1	1	M4 X 16
5*	3787500M92		[A]
6	3011268X1		
7	4272209M1		
8	3787415M1		
9	3010895X1		M4 X 35
9	3010818X1		M4 X 20
10*	4291979M1		

[A] WITH PARKING BRAKE
AVEC FREIN DE PARKING
MIT FESTSTELLBREMSE
CON FRENO DI PARCHEGGIO
CON CONTROLES DE FRENOS

1	COMBI SWITCH	COMMODO COMBI SWITCH	KOMBI-SCHALTER COMBI SWITCH
1	SWITCH,INDIRECT	CONTACTEUR INTERRUTTORE IND	KONTAKTSCHALTER CONTACTOR
1	CASE ASSY	BOITIER CARCASSA COMPLET	GEHAEUSE KPL CAJA COMPLETA
4	SCREW	VIS VITE	SCHRAUBE TORNILLO
1	WOBBLE DRIVE	BOITIER COMMANDE GUIDA OSCILLANTE	TAUMELANTRIEB MANDO OSCILANTE
1	RIVET	RIVET RIVETTO	NIET REMACHE
1	DECAL	DECALCOMANIE DECALCOMANIA	AUFKLEBER CALCOMANIA
1	WOBBLE DRIVE	BOITIER COMMANDE GUIDA OSCILLANTE	TAUMELANTRIEB MANDO OSCILANTE
1	SCREW METRIC	VIS METRIQUE VITE METRICA	SCHRAUBE METR TORNILLO METRICO
1	SCREW METRIC	VIS METRIQUE VITE METRICA	SCHRAUBE METR TORNILLO METRICO
1	SWITCH	INTERRUPTEUR INTERRUTTORE	SCHALTER INTERRUPTOR

Steering Pump
Pompe De Direction
Lenkhilfepumpe
Pompa Di Sterzo
Bomba Direccion

70-20

1-WN07-001-A

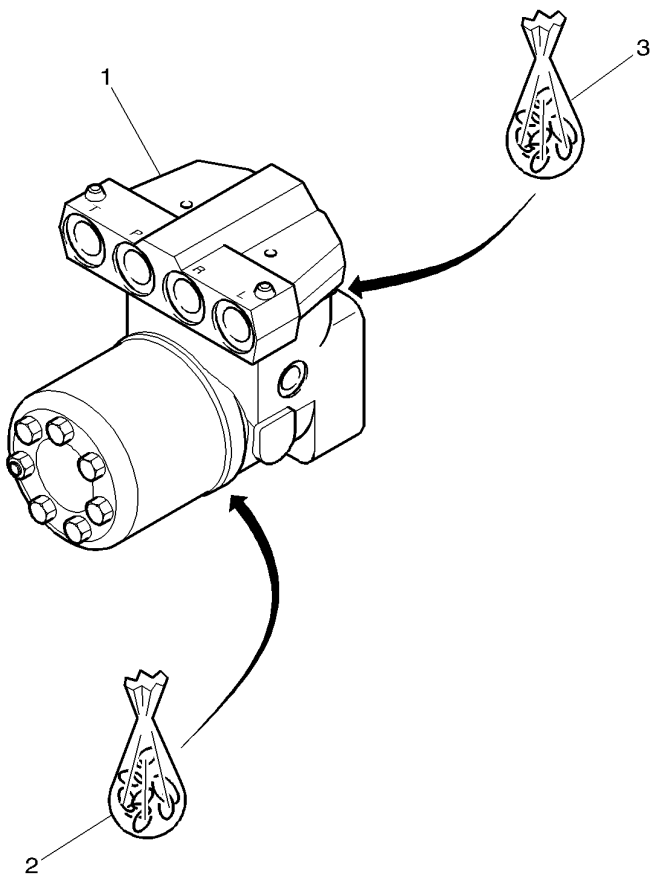

1	4285379M1	[Z]	**1**	DISTRIBUTOR	DISTRIBUTEUR DISTRIBUTORE	SAERAEDER DISTRIBUIDOR
2*	3903005M91		**1**	PARTS PACK	JEU PIECES PACCO RICAMBI	SATZ TEILE PAQUETE PIEZAS
3	3473640M91		**1**	KIT, SEAL	JEU ETANCHEITE KIT TENUTA	DICHTRINGSATZ RETENES JUEGO

[Z] NOT DETAILLED
PAS DETAILLE
NICHT VERKAUFT
PASSO DETTAGLIATO
NO DETALLADO

Steering Hydraulic Lines
Tuyauteries Hydrauliques De Direction
Hydraulikleitungen Lenkung
Tubazioni Idrauliche Di Sterzo
Instalacion Hidraulica De Direccion

70-25

1-WN06-026-C

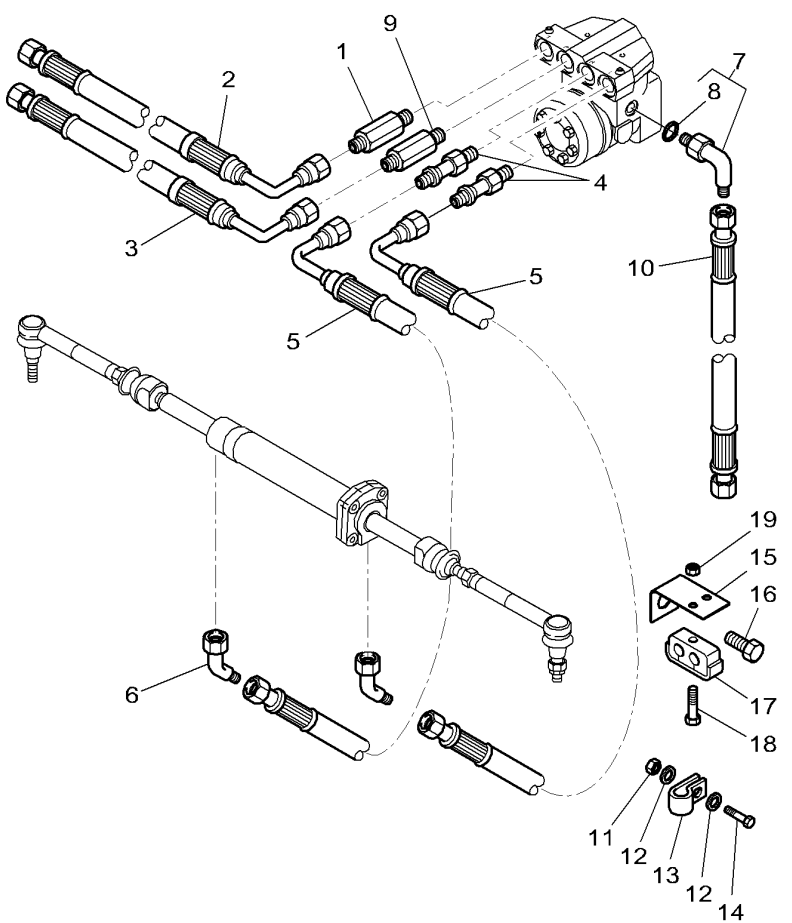

1	3789721M1		**1**	UNION	RACCORD RACCORDO	VERSCHRAUBUNG RACOR
2	4276126M3	◀▶ 1150 MM ➡ R321048	**1**	HYDR. HOSE	FLEXIBLE TUBOFLEX IDRAUL	HYDR. SCHLAUCH TUBO HIDRAULICO
2*	4276126M4	[A] ◀▶ 1300 MM ➡ R321049	**1**	HYDR. HOSE	FLEXIBLE TUBOFLEX IDRAUL	HYDR. SCHLAUCH TUBO HIDRAULICO
3	4276125M1		**1**	HYDR. HOSE	FLEXIBLE TUBOFLEX IDRAUL	HYDR. SCHLAUCH TUBO HIDRAULICO
4*	4272115M2		**2**	UNION	RACCORD RACCORDO	VERSCHRAUBUNG RACOR
5	4276127M1		**2**	HYDR. HOSE	FLEXIBLE TUBOFLEX IDRAUL	HYDR. SCHLAUCH TUBO HIDRAULICO
6	3787918M1		**2**	UNION	RACCORD RACCORDO	VERSCHRAUBUNG RACOR
7	4279816M1	M12 / M14	**1**	UNION	RACCORD RACCORDO	VERSCHRAUBUNG RACOR
8	3011061X1	7	**1**	O RING	JOINT TORIQUE GIUNTO DI TENUTA	O-RING JUNTA TOROIDAL
9	4274551M1		**1**	UNION	RACCORD RACCORDO	VERSCHRAUBUNG RACOR
10	4276124M1		**1**	HYDR. HOSE	FLEXIBLE TUBOFLEX IDRAUL	HYDR. SCHLAUCH TUBO HIDRAULICO
11	394367X1	➡ R321048	**1**	NUT	ECROU DADO	MUTTER TUERCA
12	391039X1	➡ R321048	**2**	FLAT WASHER	RONDELLE PLATE RONDELLE PIANA	UNTERLEGSCHEIBEN ARANDELA PLANA
13	3581131M1	∅ 20 - M8 ➡ R321048	**1**	CLIP	PATTE D'ATTACHE FERMAGLIO	SCHELLE CLIP
14	339168X1	M8 X 50 ➡ R321048	**1**	HEX. SOCK. SCREW	VIS TETE HEX VITE PARKER	ZYLINDERSCHRAUBE TORN.CAB.HUECA
15*	4286704M1	[A] ➡ R321049	**2**	SUPPORT	SUPPORT SOPPORTO	TRAGER SOPORTE
16*	1441704X1	[A] M20 X 40 ➡ R321049	**2**	HEX. SOCK. SCREW	VIS TETE HEX VITE PARKER	ZYLINDERSCHRAUBE TORN.CAB.HUECA
17*	3781937M1	[A] ▶ ∅ 16-18 ➡ R321049	**1**	BRIDLE	BRIDE BRIGLIA	LASCHENSPANNBAND BRIDA
17*	3781908M1	[A] ◀ ∅ 18 ➡ R321049	**1**	BRIDLE	BRIDE BRIGLIA	LASCHENSPANNBAND BRIDA
18*	339010X1	[A] M8 X 40 ➡ R321049	**2**	HEX. SOCK. SCREW	VIS TETE HEX VITE PARKER	ZYLINDERSCHRAUBE TORN.CAB.HUECA
19*	339169X1	[A] M8 ➡ R321049	**2**	NUT	ECROU DADO	MUTTER TUERCA

Steering Hydraulic Lines
Tuyauteries Hydrauliques De Direction
Hydraulikleitungen Lenkung
Tubazioni Idrauliche Di Sterzo
Instalacion Hidraulica De Direccion

70-25

1-WN06-026-C

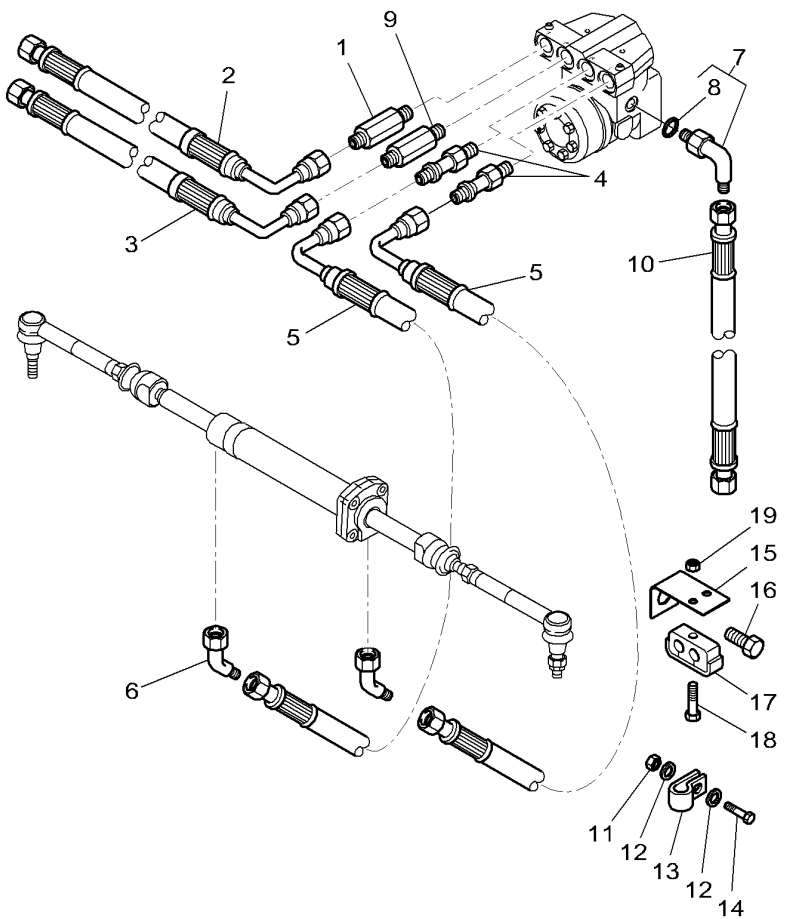

[A] VALID ALSO FOR TRACTOR R313045
VALABLE EGALEMENT POUR TRACTEUR R313045
GULTIG EBENFALLS FUR TRAKTOR R313045
VALIDO ANCHE PER TRATTORE R313045
VALIDO TAMBIEN PARA TRACTOR R313045

Front Suspension Hydraulic Lines
Tuyauteries Hydrauliques De Suspension Avant
Hydraulikleitungen Vorderfederung
Tubazioni Idrauliche Di Sospensione Anteriore
Instalacion Hidraulica Del Suspension Delantero

70-30

1-WN08-010-B

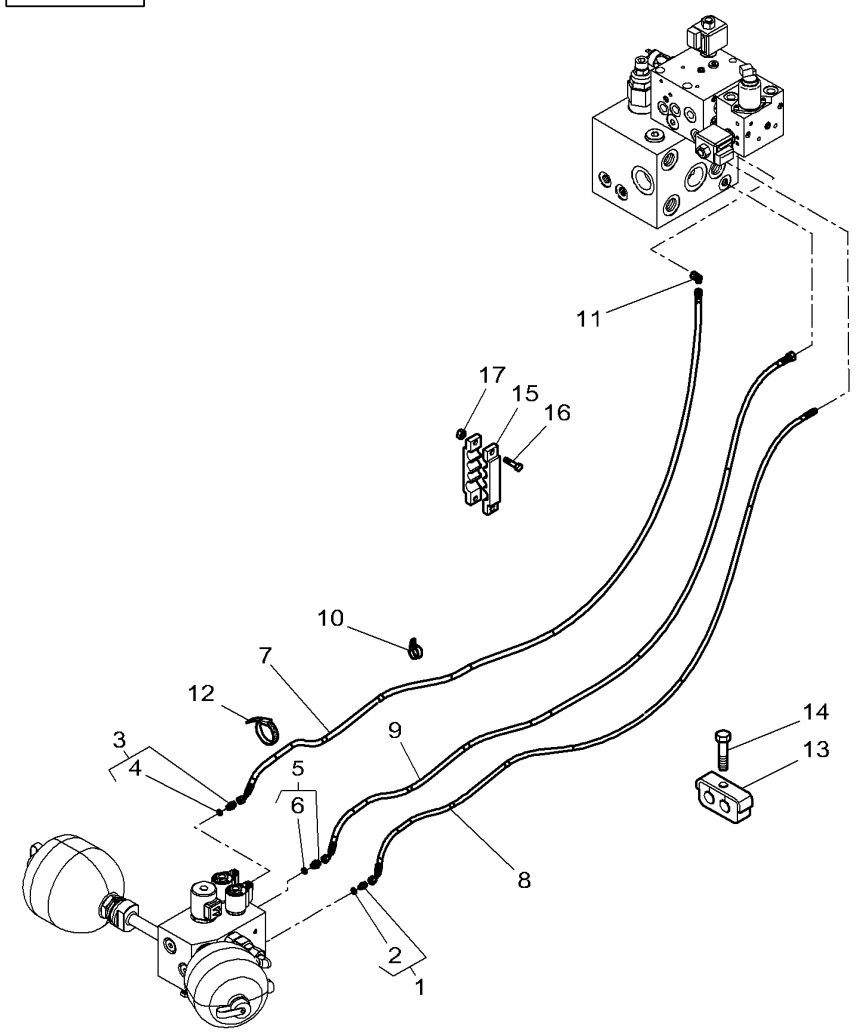

1	338747X91		**1**	UNION	RACCORD RACCORDO	VERSCHRAUBUNG RACOR
2	338764X1	1	**1**	SEAL	JOINT ETANCHEITE GIUNTO ROTONDO	DICHTRING JUNTA REDONDA
3	3001345X91		**1**	UNION	RACCORD RACCORDO	VERSCHRAUBUNG RACOR
4	338763X1	3	**1**	SEAL	JOINT ETANCHEITE GIUNTO ROTONDO	DICHTRING JUNTA REDONDA
5	338795X91		**1**	UNION	RACCORD RACCORDO	VERSCHRAUBUNG RACOR
6	338762X1	5	**1**	SEAL	JOINT ETANCHEITE GIUNTO ROTONDO	DICHTRING JUNTA REDONDA
7	4281635M1	◀▶ 3300 MM ➡| R321048	**1**	HYDR. HOSE	FLEXIBLE TUBOFLEX IDRAUL	HYDR. SCHLAUCH TUBO HIDRAULICO
7*	4291429M1	[B] ◀▶ 2900 MM ➡| R321049	**1**	HYDR. HOSE	FLEXIBLE TUBOFLEX IDRAUL	HYDR. SCHLAUCH TUBO HIDRAULICO
8*	4281636M4	◀▶ 2900 MM	**1**	HYDR. HOSE	FLEXIBLE TUBOFLEX IDRAUL	HYDR. SCHLAUCH TUBO HIDRAULICO
9*	4281637M2	◀▶ 2750 MM	**1**	HYDR. HOSE	FLEXIBLE TUBOFLEX IDRAUL	HYDR. SCHLAUCH TUBO HIDRAULICO
10	3010808X1		**1**	CLIP	PATTE D'ATTACHE FERMAGLIO	SCHELLE CLIP
11	3787918M1		**1**	UNION	RACCORD RACCORDO	VERSCHRAUBUNG RACOR
12*	4279276M1	[A]	**1**	CABLE TIE	ATTACHE CABLE FASCETTA CAVI	KABELBINDER APRIETACABLES
13*	3781907M1		**1**	BRIDLE	BRIDE BRIGLIA	LASCHENSPANNBAND BRIDA
14*	339159X1	M8 X 65	**1**	HEX. SOCK. SCREW	VIS TETE HEX VITE PARKER	ZYLINDERSCHRAUBE TORN.CAB.HUECA
15*	4286707M2		**2**	BRIDLE	BRIDE BRIGLIA	LASCHENSPANNBAND BRIDA
16*	339337X1	M8 X 30	**2**	HEX. SOCK. SCREW	VIS TETE HEX VITE PARKER	ZYLINDERSCHRAUBE TORN.CAB.HUECA
17*	339169X1	M8	**2**	NUT	ECROU DADO	MUTTER TUERCA

[A] GREEN
VERT
GRUN
VERDE
VERDE

[B] VALID ALSO FOR TRACTOR R313045
VALABLE EGALEMENT POUR TRACTEUR R313045
GULTIG EBENFALLS FUR TRAKTOR R313045
VALIDO ANCHE PER TRATTORE R313045
VALIDO TAMBIEN PARA TRACTOR R313045

Brackets Pedal
Supports Pedales
Halteren Pedal
Suporti Pedale
Soportes Pedales

70-35

1-WR07-012-B

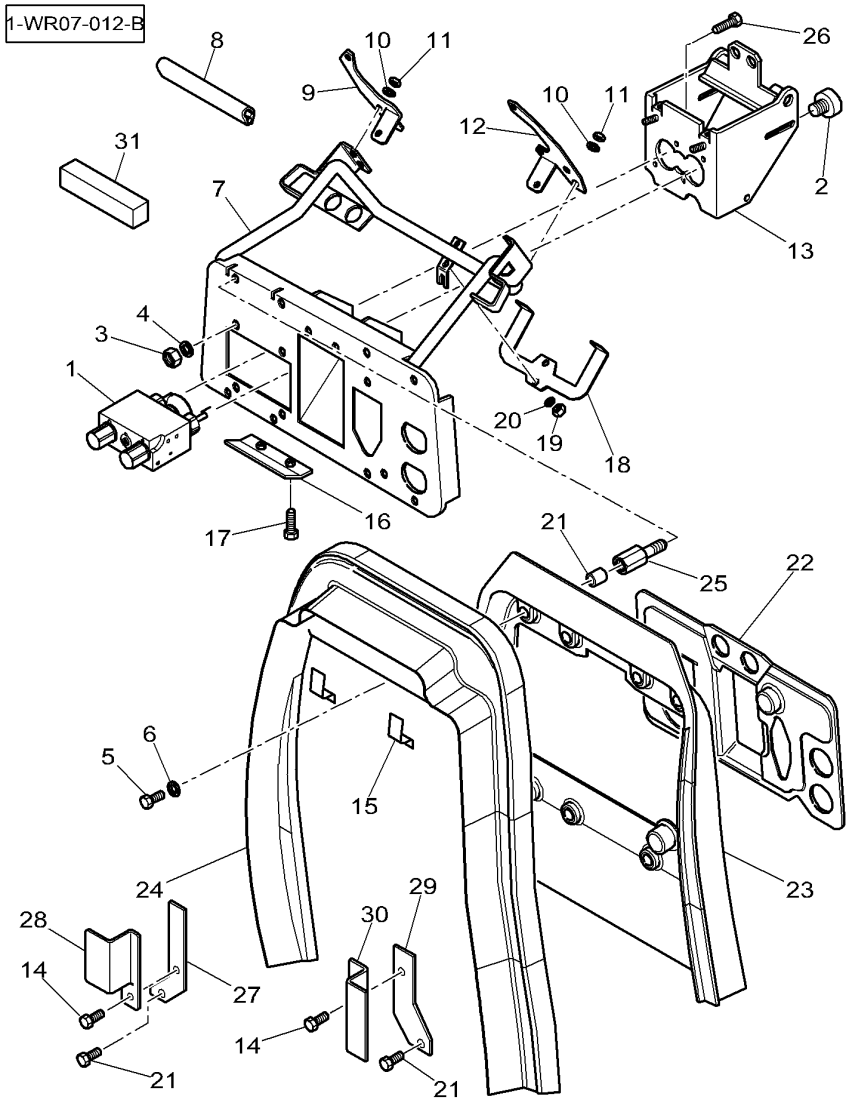

1	4270774M1	👁	70-55 No 1	**1**	PRESSURE VALVE	VALVE VALVOLA PRESSION	DRUCKVENTIL VALVULA PRESION
2	4270770M4			**1**	BUTTON	BOUTON BOTTONE	KNOPFTASTE BOTON
3	339169X1		M8	**2**	NUT	ECROU DADO	MUTTER TUERCA
4	390972X1		∅ 8-17 X 1,7	**4**	FLAT WASHER	RONDELLE PLATE RONDELLE PIANA	UNTERLEGSCHEIBEN ARANDELA PLANA
5	339124X1		M8 X 16	**8**	HEX. SOCK. SCREW	VIS TETE HEX VITE PARKER	ZYLINDERSCHRAUBE TORN.CAB.HUECA
5	339761X1		M8 X 25	**2**	HEX. SOCK. SCREW	VIS TETE HEX VITE PARKER	ZYLINDERSCHRAUBE TORN.CAB.HUECA
6	391039X1		∅ 8-24 X 2	**8**	FLAT WASHER	RONDELLE PLATE RONDELLE PIANA	UNTERLEGSCHEIBEN ARANDELA PLANA
7*	4270570M98			**1**	SUPPORT	SUPPORT SOPPORTO	TRAGER SOPORTE
8	3580695M1		[A] ◀▶ 1600 MM	**1**	GASKET	JOINT GIUNTO PIANO	FLACHDICHTUNG JUNTA PLANA
9	4270577M2		▶	**1**	PLATE CLAMPING	PLATINE PIASTRA APPOGGIO	KLEMMPLATTE PLACA DE ABRAZO
10	390971X1		∅ 6-12 X 1,5	**4**	FLAT WASHER	RONDELLE PLATE RONDELLE PIANA	UNTERLEGSCHEIBEN ARANDELA PLANA
11	1441462X1		M6	**4**	LOCKNUT	ECROU FREIN AUTOBLOCCANTE	SICHERUNGSMUTTER CONTRATUERCA
12	4270576M2		◀	**1**	PLATE CLAMPING	PLATINE PIASTRA APPOGGIO	KLEMMPLATTE PLACA DE ABRAZO
13*	4270599M2			**1**	SUPPORT	SUPPORT SOPPORTO	TRAGER SOPORTE
14	339666X1		M6 X 20	**2**	HEX. SOCK. SCREW	VIS TETE HEX VITE PARKER	ZYLINDERSCHRAUBE TORN.CAB.HUECA
15	4276478M2			**2**	STRAP	PATTE CORREGGIA	LASCHE FAJA
16	3785650M1			**1**	STOP	BUTEE STOP	ANSCHLAG PARO
17	339666X1		M6 X 20 ➡| ...	**2**	HEX. SOCK. SCREW	VIS TETE HEX VITE PARKER	ZYLINDERSCHRAUBE TORN.CAB.HUECA
17*	391074X1		M6 X 12 |➡ ...	**2**	HEX. SOCK. SCREW	VIS TETE HEX VITE PARKER	ZYLINDERSCHRAUBE TORN.CAB.HUECA
18*	4271236M2			**1**	STRAP	PATTE CORREGGIA	LASCHE FAJA
19	1441462X1		M6	**2**	LOCKNUT	ECROU FREIN AUTOBLOCCANTE	SICHERUNGSMUTTER CONTRATUERCA
20	390971X1		∅ 6-12 X 1,5	**2**	FLAT WASHER	RONDELLE PLATE RONDELLE PIANA	UNTERLEGSCHEIBEN ARANDELA PLANA
21	339123X1		M8 X 20	**2**	HEX. SOCK. SCREW	VIS TETE HEX VITE PARKER	ZYLINDERSCHRAUBE TORN.CAB.HUECA
22	4272627M4			**1**	CASE ASSY	BOITIER CARCASSA COMPLET	GEHAEUSE KPL CAJA COMPLETA
23*	4271063M5			**1**	BULKHEAD	SEPARATION PARATIA	TRENNBLECH MAMPARO
24	4276474M1			**1**	PROTECTOR	PROTECTEUR PROTETTORE	SCHUTZ PROTECTOR

Brackets Pedal
Supports Pedales
Halteren Pedal
Suporti Pedale
Soportes Pedales

70-35

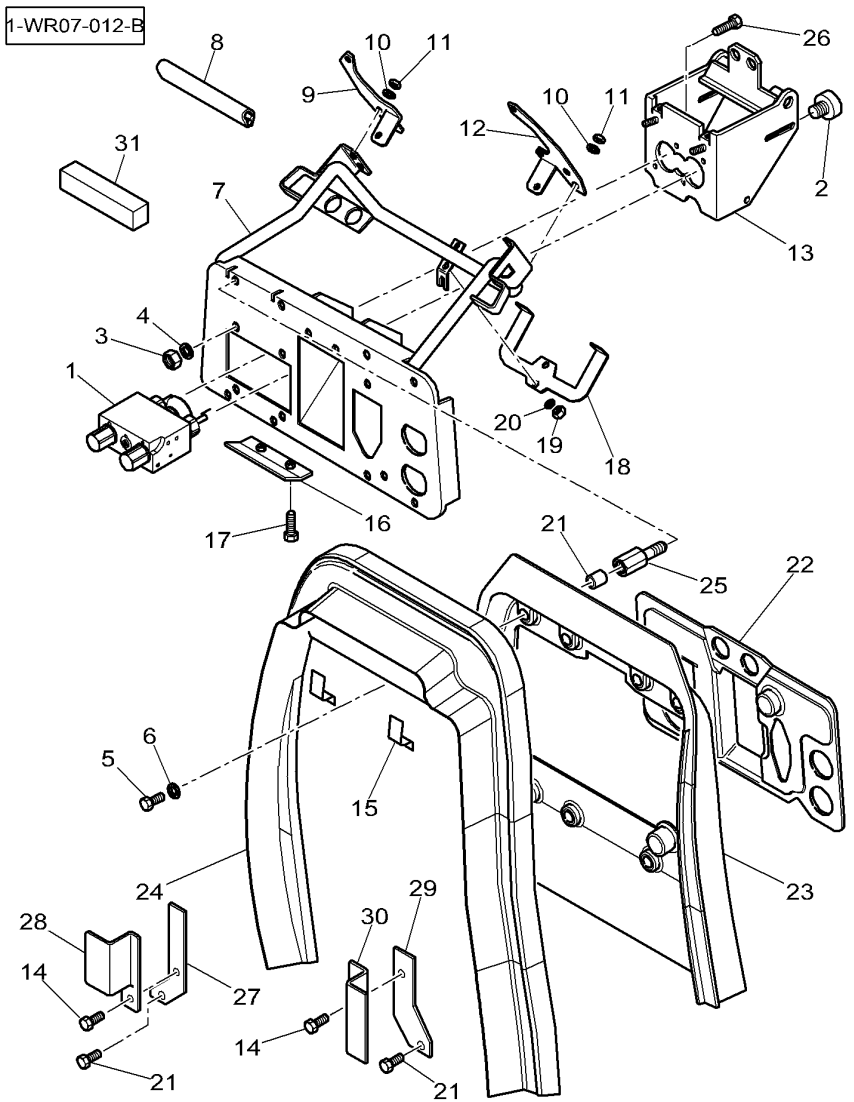

25	4274753M2	M8 X 50	**7**	STUD	GOUJON SPINOTTO FILETT.	STEHBOLZEN ESPARRAGO ROSCA.
25	4277120M1	M8 X 65	**1**	STUD	GOUJON SPINOTTO FILETT.	STEHBOLZEN ESPARRAGO ROSCA.
26	339666X1	M6 X 20	**4**	HEX. SOCK. SCREW	VIS TETE HEX VITE PARKER	ZYLINDERSCHRAUBE TORN.CAB.HUECA
27	4275483M1		**1**	STRAP	PATTE CORREGGIA	LASCHE FAJA
28	4275484M1		**1**	STRAP	PATTE CORREGGIA	LASCHE FAJA
29	4275485M1		**1**	STRAP	PATTE CORREGGIA	LASCHE FAJA
30	4275486M1		**1**	STRAP	PATTE CORREGGIA	LASCHE FAJA
31	3778749M1	25 X 15 X 80 MM	**1**	FOAM	MOUSSE GOMMAPIUMA	SCHAUMSTOFF ESPUMA

[A] CUT TO REQUIRED LENGTH
COUPER A LA LONGEUR DESIREE
BENOETIGTE LAENGE ABSCHNEIDEN
TAGLIARE ALLA LUNGHEZZA DESIDERATA
CORTAR A LA LONGITUD DESEADA

Brake Pedals
Pedales De Frein
Bremspedal
Pedali Freni
Pedals Del Freno

70-40

1-WG16-005-B

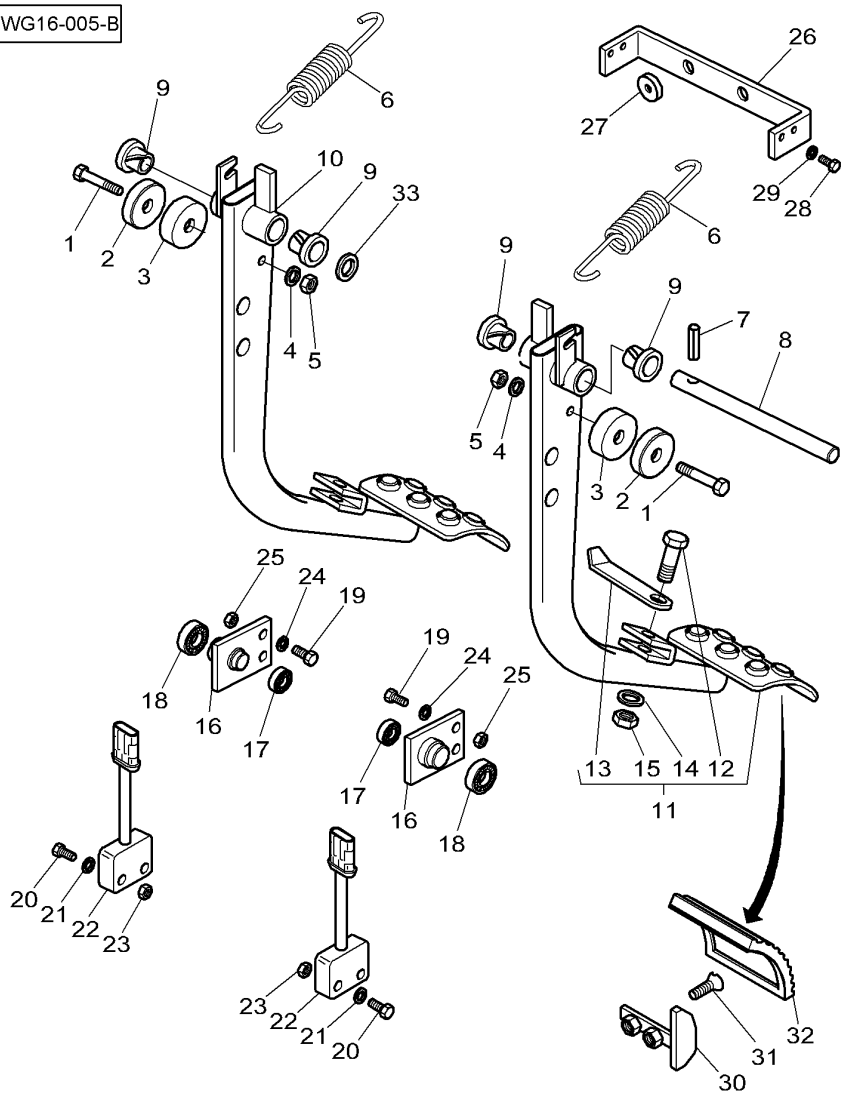

1	3010895X1	M4 X 35	**2**	SCREW METRIC	VIS METRIQUE VITE METRICA	SCHRAUBE METR TORNILLO METRICO
2	X830120050000		**2**	MAGNET	AIMANT MAGNETE.	MAGNET IMAN
3	3788754M1	∅ 26 X 14	**2**	SPACER	ENTRETOISE DISTANZIALE	ABSTANDSTUECK DISCO ESPACIADOR
4	339102X1	∅ 4-9 X 1	**2**	WASHER	RONDELLE RONDELLA	SCHEIBE ARANDELA
5	3019139X1	M4	**2**	NUT	ECROU DADO	MUTTER TUERCA
6	3785651M1		**2**	SPRING	RESSORT MOLLA	FEDER MUELLE
7	391290X1	∅ 5 X 30	**1**	PIN	GOUPILLE COPPIGLIA	STIFT PASADOR
8	3785652M2	∅ 15 X 154	**1**	CLEVIS PIN	AXE PERNO D'ATTACCO	SPLINTBOLZEN BULON CILINDRICO
9	3385604M1		**4**	BEARING	COUSSINET CUSCINETTO	LAGER COJINETE
10	4271598M2	▶	**1**	BRAKE PEDAL	PEDALE DE FREIN PASTIGLIA FRENO	BREMSKLOTZ PASTILLA D FRENO
11	4272615M92	◀	**1**	BRAKE PEDAL	PEDALE DE FREIN PASTIGLIA FRENO	BREMSKLOTZ PASTILLA D FRENO
12	391990X1	11 M8 X 25	**1**	SCREW	VIS VITE	SCHRAUBE TORNILLO
13	4272621M1	11	**1**	LATCH	VERROU DENTE DI ARRESTO	KLINKE TOPE
14	1441782X1	11	**1**	CUP SPRING	RONDELLE RESSORT MOLLA CAPPELLOTT	TELLERFEDER CUBETA DE MUELLE
15	394367X1	11 M8	**1**	NUT	ECROU DADO	MUTTER TUERCA
16	4270768M2		**2**	SUPPORT	SUPPORT SOPPORTO	TRAGER SOPORTE
17	391077X1	∅ 47-25	**2**	BEAR. 6005 2RS	RLT 6005 2RS CUSC. 6005 2RS	LAGER 6005 2RS RODA. 6005 2RS
18	339800X1	∅ 62-35	**2**	BEAR. 6007 2RS	RLT 6007 2RS CUSC. 6007 2RS	LAGER 6007 2RS RODA. 6007 2RS
19*	3009508X1	M12 X 40	**4**	HEX. SOCK. SCREW	VIS TETE HEX VITE PARKER	ZYLINDERSCHRAUBE TORN.CAB.HUECA
20	3010818X1	M4 X 20	**4**	SCREW METRIC	VIS METRIQUE VITE METRICA	SCHRAUBE METR TORNILLO METRICO
21	339102X1	∅ 4-9 X 1	**4**	WASHER	RONDELLE RONDELLA	SCHEIBE ARANDELA
22	**H312900150010**		**2**	SOLENOID SWITCH	RELAIS SOLENOIDE INTERRUTTORE SOL	MAGNETSCHALTER INTERR SOLENOIDE
23*	3019139X1	M4	**4**	NUT	ECROU DADO	MUTTER TUERCA
24	390735X1	∅ 12-24 X 2,5	**4**	FLAT WASHER	RONDELLE PLATE RONDELLE PIANA	UNTERLEGSCHEIBEN ARANDELA PLANA
25	1440330X1	M12	**4**	LOCKNUT	ECROU FREIN AUTOBLOCCANTE	SICHERUNGSMUTTER CONTRATUERCA
26	4270773M1		**1**	STOP	BUTEE STOP	ANSCHLAG PARO

Brake Pedals
Pedales De Frein
Bremspedal
Pedali Freni
Pedals Del Freno

70-40

1-WG16-005-B

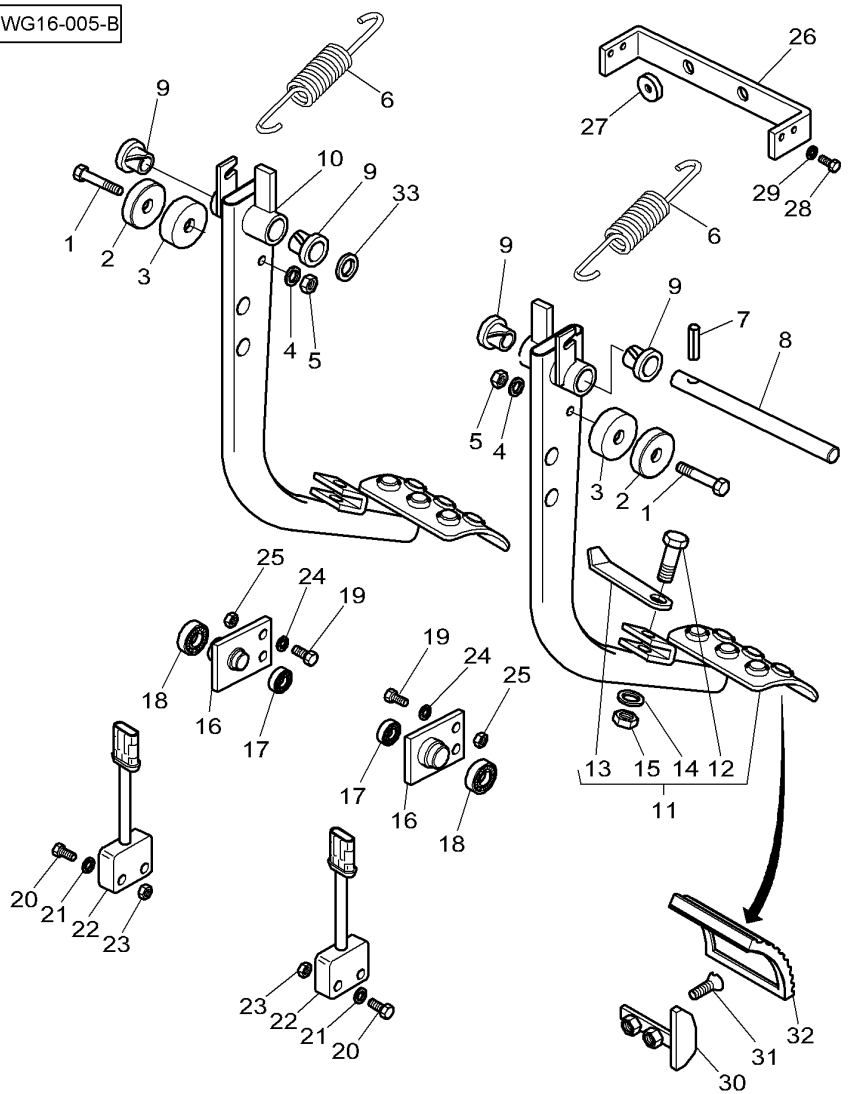

27	3713404M1	∅ 15	**2**	PLUG	BOUCHON TAPPO	STOPFEN TAPON
28	3009280X1	M6 X 12	**4**	SCREW	VIS VITE	SCHRAUBE TORNILLO
29	390971X1	∅ 6-12 X 1,5	**4**	FLAT WASHER	RONDELLE PLATE RONDELLE PIANA	UNTERLEGSCHEIBEN ARANDELA PLANA
30*	3714488M4		**1**	STOP	BUTEE STOP	ANSCHLAG PARO
31	392404X1	M5 X 12	**2**	SCREW	VIS VITE	SCHRAUBE TORNILLO
32	1626321M2		**2**	SKATE	PATIN PATTINO	SCHLITTEN-KUFE PATIN
33*	339794X1	∅ 15-26 X 1	**1**	WASHER METRIC	RONDELLE METR. RONDELLA METRICO	SCHEIBE METRISCH ARANDELA METRICO

PLANCHES EN COURS D'ILLUSTRATION

1	4270774M1	70-55 No 1	**1**	PRESSURE VALVE	VALVE VALVOLA PRESSION	DRUCKVENTIL VALVULA PRESION
2	3011554X91	M12X1.5	**1**	UNION	RACCORD RACCORDO	VERSCHRAUBUNG RACOR
3	338761X1	2	**1**	O RING	JOINT TORIQUE GIUNTO DI TENUTA	O-RING JUNTA TOROIDAL
4	3011038X91	M14X1.5	**4**	UNION	RACCORD RACCORDO	VERSCHRAUBUNG RACOR
5	338762X1	4	**1**	SEAL	JOINT ETANCHEITE GIUNTO ROTONDO	DICHTRING JUNTA REDONDA
6	3011553X91	M16x1.5	**1**	TEEPIECE	TE RACCORDO A T	T-STUECK PIEZA EN T
7	3011144X1	6	**1**	O RING	JOINT TORIQUE GIUNTO DI TENUTA	O-RING JUNTA TOROIDAL
8	4276754M1		**1**	UNION	RACCORD RACCORDO	VERSCHRAUBUNG RACOR
9	4275100M1		**2**	BRIDLE	BRIDE BRIGLIA	LASCHENSPANNBAND BRIDA
10	4275670M1	...	**1**	PLATE	PLAQUE PIASTRA	PLATTE PLATO
11				NOT USED	NON UTILISE INUSATO	NICHT VERWENDET NO SE USA
12	4270451M1	M8 / M6	**1**	STUD	GOUJON SPINOTTO FILETT.	STEHBOLZEN ESPARRAGO ROSCA.
13	1441500X1	M6	**1**	TOP LOCKNUT	ECROU AUTOFREINE DADO DI TESTA	SELBSTS.MUTTER CONTRATUERCA SUP
14	391038X1	∅ 6-18 X 1,5	**3**	FLAT WASHER	RONDELLE PLATE RONDELLE PIANA	UNTERLEGSCHEIBEN ARANDELA PLANA
15	4275096M2		**1**	TUBE	TUBE TUBO.	ROHR TUBO.
16	4275094M1		**1**	TUBE	TUBE TUBO.	ROHR TUBO.
17	4275095M1		**1**	TUBE	TUBE TUBO.	ROHR TUBO.
18	4275097M1		**1**	TUBE	TUBE TUBO.	ROHR TUBO.
19	4275098M1		**1**	TUBE	TUBE TUBO.	ROHR TUBO.
20	**4275671M2**		**1**	TRANSDUCER	CAPTEUR TRANSDUCER	NABENTRIEB. TRANSDUCER
21	3907427M1	20	**1**	GASKET	JOINT GIUNTO PIANO	FLACHDICHTUNG JUNTA PLANA
22*	4276152M3	1460 MM	**1**	HYDR. HOSE	FLEXIBLE TUBOFLEX IDRAUL	HYDR. SCHLAUCH TUBO HIDRAULICO
23	4276156M1	2100 MM	**1**	HYDR. HOSE	FLEXIBLE TUBOFLEX IDRAUL	HYDR. SCHLAUCH TUBO HIDRAULICO
24	4276155M1	1700 MM	**1**	HYDR. HOSE	FLEXIBLE TUBOFLEX IDRAUL	HYDR. SCHLAUCH TUBO HIDRAULICO
25	4277412M2	1700 MM	**1**	HYDR. HOSE	FLEXIBLE TUBOFLEX IDRAUL	HYDR. SCHLAUCH TUBO HIDRAULICO
26	3011038X91	M14X1.5	**4**	UNION	RACCORD RACCORDO	VERSCHRAUBUNG RACOR

PLANCHES EN COURS D'ILLUSTRATION

27	338762X1	26	**1**	SEAL	JOINT ETANCHEITE GIUNTO ROTONDO	DICHTRING JUNTA REDONDA
28*	4276158M2	◄► 1750 MM	**1**	HYDR. HOSE	FLEXIBLE TUBOFLEX IDRAUL	HYDR. SCHLAUCH TUBO HIDRAULICO
29	3011543X91	M16X1.5	**1**	UNION	RACCORD RACCORDO	VERSCHRAUBUNG RACOR
30	3011144X1	29	**1**	O RING	JOINT TORIQUE GIUNTO DI TENUTA	O-RING JUNTA TOROIDAL
31	3011547X91	M16X1.5	**1**	UNION	RACCORD RACCORDO	VERSCHRAUBUNG RACOR
32	338763X1	31	**1**	SEAL	JOINT ETANCHEITE GIUNTO ROTONDO	DICHTRING JUNTA REDONDA
33	4276157M1	◄► 400 MM	**1**	HYDR. HOSE	FLEXIBLE TUBOFLEX IDRAUL	HYDR. SCHLAUCH TUBO HIDRAULICO
34*	4275670M2	➡ ...	**1**	PLATE	PLAQUE PIASTRA	PLATTE PLATO
35*	4286579M1		**1**	SUPPORT	SUPPORT SOPPORTO	TRAGER SOPORTE
36*	4286581M1		**1**	SUPPORT	SUPPORT SOPPORTO	TRAGER SOPORTE
37*	4286573M1		**1**	SUPPORT	SUPPORT SOPPORTO	TRAGER SOPORTE
38*	4286580M1		**1**	SUPPORT	SUPPORT SOPPORTO	TRAGER SOPORTE
39*	4286592M1		**2**	BRIDLE	BRIDE BRIGLIA	LASCHENSPANNBAND BRIDA
40*	4286571M1		**2**	BRIDLE	BRIDE BRIGLIA	LASCHENSPANNBAND BRIDA
41*	4286593M2		**2**	BRIDLE	BRIDE BRIGLIA	LASCHENSPANNBAND BRIDA
42*	339230X1	M6 X 10	**3**	HEX. SOCK. SCREW	VIS TETE HEX VITE PARKER	ZYLINDERSCHRAUBE TORN.CAB.HUECA
43*	3009695X1	M12	**2**	NUT	ECROU DADO	MUTTER TUERCA

1-WG17-004-B

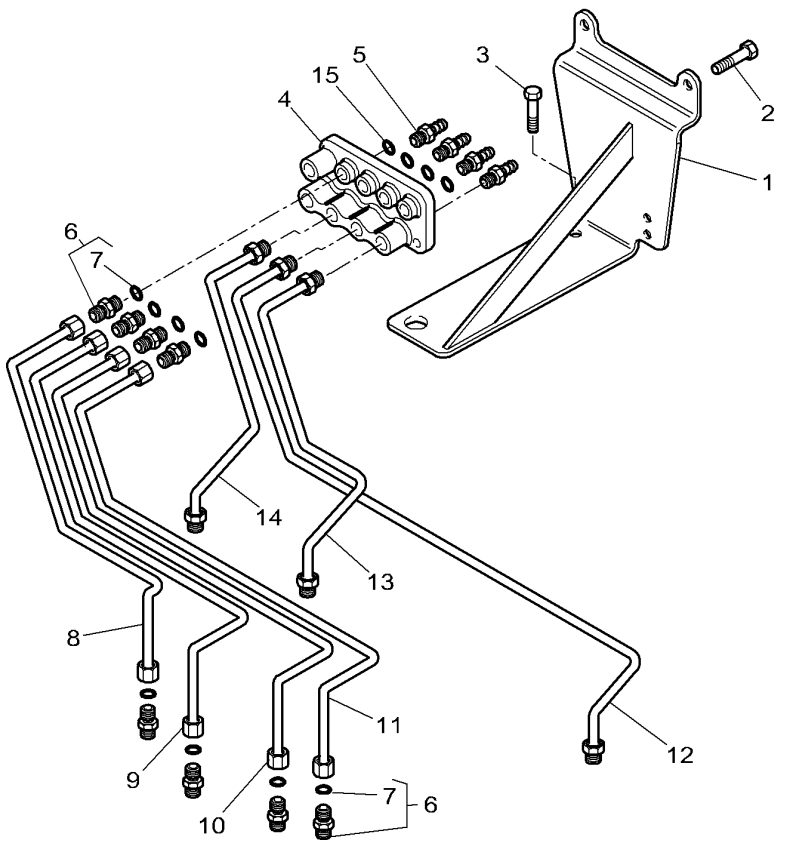

1	4275565M2		**1**	SUPPORT	SUPPORT SOPPORTO	TRAGER SOPORTE
2	339123X1	M8 X 20	**2**	HEX. SOCK. SCREW	VIS TETE HEX VITE PARKER	ZYLINDERSCHRAUBE TORN.CAB.HUECA
3	3009493X1	M10 X 30 ➡| 20-FEB-2006	**1**	HEX. SOCK. SCREW	VIS TETE HEX VITE PARKER	ZYLINDERSCHRAUBE TORN.CAB.HUECA
3*	3009496X1	M10 X 45 ➡ 21-FEB-2006	**1**	HEX. SOCK. SCREW	VIS TETE HEX VITE PARKER	ZYLINDERSCHRAUBE TORN.CAB.HUECA
4	903150070010		**1**	CENTER PIECE	PIECE INTERME CENTER PIECE	MITTELSTUECK PIEZA INTERMEDIA
5	G514100100060		**4**	BREATHER VALVE	VALVE D EVENT VALVOLA SFIATO	ENTLUEFT.VENTIL VALVULA DESAHOGO
6	338906X91		**8**	UNION	RACCORD RACCORDO	VERSCHRAUBUNG RACOR
7	338760X1	6	**1**	O RING	JOINT TORIQUE GIUNTO DI TENUTA	O-RING JUNTA TOROIDAL
8	4274999M1		**1**	TUBE	TUBE TUBO.	ROHR TUBO.
9	4274998M1		**1**	TUBE	TUBE TUBO.	ROHR TUBO.
10	4274997M1		**1**	TUBE	TUBE TUBO.	ROHR TUBO.
11	4274996M1		**1**	TUBE	TUBE TUBO.	ROHR TUBO.
12	4274986M1		**1**	TUBE	TUBE TUBO.	ROHR TUBO.
13	4275000M1		**1**	TUBE	TUBE TUBO.	ROHR TUBO.
14	4274985M1		**1**	TUBE	TUBE TUBO.	ROHR TUBO.
15	3823236M1		**4**	WASHER	RONDELLE RONDELLA	SCHEIBE ARANDELA

Brake Valve
Valve De Frein
Bremsventil
Valvola Di Freno
Valvula De Freno

70-55

PLANCHES EN COURS D'ILLUSTRATION

1*	4270774M1		**1**	PRESSURE VALVE	VALVE VALVOLA PRESSION	DRUCKVENTIL VALVULA PRESION
2*		1 REF. 1	**1**	VALVE BODY	CORPS DE VALVE CORPO VALVOLA	VENTILGEHAEUSE CUERPO VALVULA
3*		1 REF. 11	**1**	PROTECTOR	PROTECTEUR PROTETTORE	SCHUTZ PROTECTOR
4*	3907905M1	1	**1**	VALVE	SOUPAPE VALVOLA	VENTIL VALVULA
5*		1 REF. 11	**1**	GASKET	JOINT GIUNTO PIANO	FLACHDICHTUNG JUNTA PLANA
6*		1 REF. 11	**1**	GASKET	JOINT GIUNTO PIANO	FLACHDICHTUNG JUNTA PLANA
7*		1 REF. 11	**1**	GASKET	JOINT GIUNTO PIANO	FLACHDICHTUNG JUNTA PLANA
8*		7 REF. 11	**1**	GASKET	JOINT GIUNTO PIANO	FLACHDICHTUNG JUNTA PLANA
9*		1 REF. 11	**1**	O RING	JOINT TORIQUE GIUNTO DI TENUTA	O-RING JUNTA TOROIDAL
10*		1 REF. 11	**1**	O RING	JOINT TORIQUE GIUNTO DI TENUTA	O-RING JUNTA TOROIDAL
11*	3907823M91	1	**1**	KIT, REPAIR	JEU REPARATION KIT RIPARAZIONE	REPARATURSATZ JUEGO REPARACION

Hydraulic Brake Assy
Freinage Hydraulique
Hydraulische Bremse
Freno Idraulico
Freno Hidraulica

70-60

1-WA12-002-A

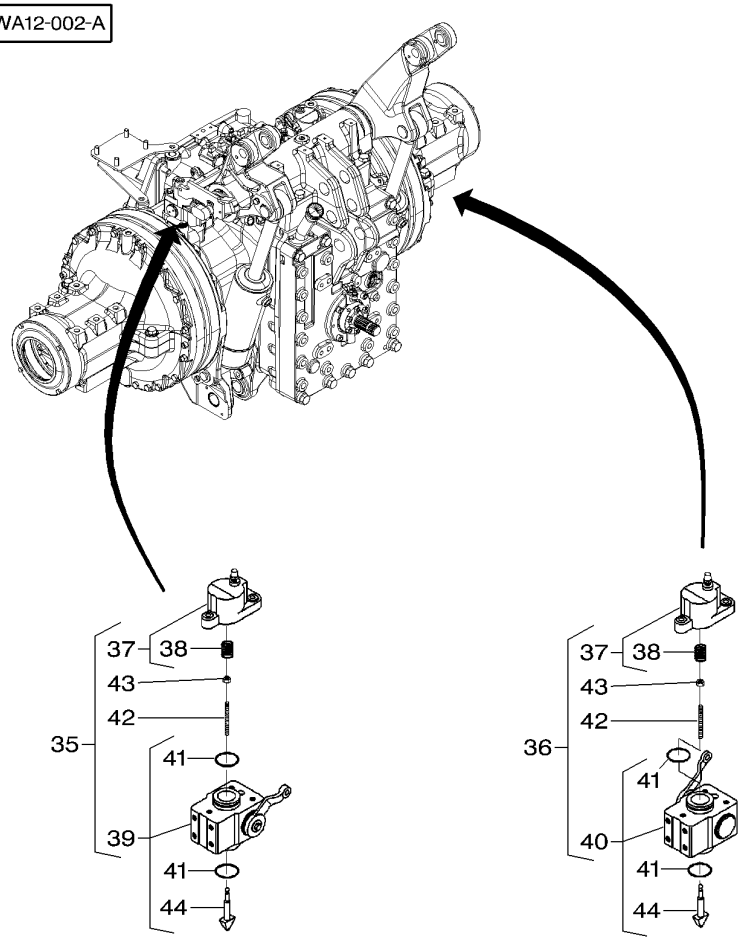

35	G903150070100	[A]	**1**	CYLINDER	CYLINDRE CILINDRO	ZYLINDER CILINDRO
36	G903150070110	[B]	**1**	CYLINDER	CYLINDRE CILINDRO	ZYLINDER CILINDRO
37	F716150070050		**1**	CYL HEAD PART	PIECE SUPER CYL. CYL HEAD PART	ZYLINDEROBERTEIL CYL HEAD PART
38	F822100070060	37	**1**	COMP.SPRING	RESSORT DE COMPR MOLLA COMPOSTA	DRUCKFEDER RESORTE DE COMP.
39	G822100070380	[C]	**1**	WHEEL CYLINDER	CYLINDRE ROUE CILINDRO RUOTA	RADBREMSZYLINDER CILINDRO RUEDA
40	G822100070390	[C]	**1**	WHEEL CYLINDER	CYLINDRE ROUE CILINDRO RUOTA	RADBREMSZYLINDER CILINDRO RUEDA
41	F822100070040		**2**	O RING	JOINT TORIQUE GIUNTO DI TENUTA	O-RING JUNTA TOROIDAL
42	F524101070140		**1**	GRUB SCREW	VIS SANS TETE VITE SENZA TESTA	GEWINDESTIFT TORNILLO SIN CAB
43	X428202839000	M10	**1**	NUT	ECROU DADO	MUTTER TUERCA
44	F822100070030		**1**	WEDGE	POIDS ZEPPA	KEIL CUNA

[A] INCLUDES REF : 37 TO 39-41 TO 44
COMPREND REF : 37 A 39-41 A 44
ENTHALTE REF : 37 BIS 39-41 BIS 44
COMPRENDE REF : 37 A 39-41 A 44
INCLUYE REF : 37 A 39-41 A 44

[B] INCLUDES REF : 37-38-40 TO 44
COMPREND REF : 37-38-40 A 44
ENTHALTE REF : 37-38-40 BIS 44
COMPRENDE REF : 37-38-40 A 44
INCLUYE REF : 37-38-40 A 44

[C] INCLUDES REF : 41-44
COMPREND REF : 41-44
ENTHALTE REF : 41-44
COMPRENDE REF : 41-44
INCLUYE REF : 41-44

Pump Drive
Commande Pompe
Pumpenantrieb
Comando Pompa
Mando De Bomba

70-65

1-WG80-002-A

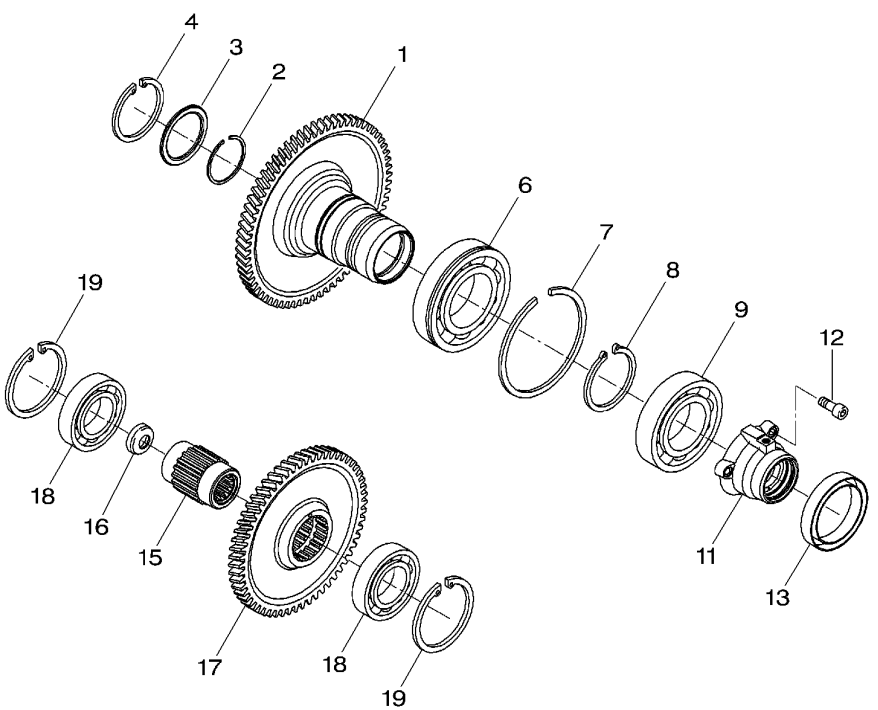

1	903100490050		**1**	SPUR GEAR	ENGRENAGE DROIT INGRANAGGIO DIR.	STIRNRAD RUEDA DE DIENTES
2	X533212000000		**1**	SNAPRING	SEGMENT ARRET ANELLO SIEGER	SPRENGRING ANILLA RETENCION
3	916100490040		**1**	DISC	DISQUE DISCO	SCHEIBE DISCO
4	**X530106046000**	∅ 52 X 2	**1**	CIRCLIP	CIRCLIP ANNELLO ELASTICO	SEEGERING GRAPA CIRCULAR
6	X605511411003		**1**	BALL BEARING	ROULEMENT BILLES CUSCINETTO SFERE	KUGELLAGER COJINETE DE BOLA
7	X532503846000		**1**	SNAPRING	SEGMENT ARRET ANELLO SIEGER	SPRENGRING ANILLA RETENCION
8	X530006146000	∅ 55 X 2	**1**	CIRCLIP	CIRCLIP ANNELLO ELASTICO	SEEGERING GRAPA CIRCULAR
9	X605505900000		**1**	BALL BEARING	ROULEMENT BILLES CUSCINETTO SFERE	KUGELLAGER COJINETE DE BOLA
11	903100490010		**1**	HOUSING	CARTER CARCASSA	GEHAEUSE ALOJAMIENTO
12	X485013205000	M10 X 30	**3**	HEX. SOCK. SCREW	VIS TETE HEX VITE PARKER	ZYLINDERSCHRAUBE TORN.CAB.HUECA
13	X550108900000	50 X 65 X 8	**1**	SHAFT SEAL	ETANCHEITE ARBRE TENUTA ALBERO	WELLENDICHTRING SELLO DE EJE
15	903100490080		**1**	SHAFT	ARBRE ALBERO	WELLE ARBOL
16	903100490170		**1**	COVER	COUVERCLE COPERCHIO	ABDECKUNG. CUBIERTA
17	903100490060		**1**	SPUR GEAR	ENGRENAGE DROIT INGRANAGGIO DIR.	STIRNRAD RUEDA DE DIENTES
18	X605505811000		**2**	BALL BEARING	ROULEMENT BILLES CUSCINETTO SFERE	KUGELLAGER COJINETE DE BOLA
19	X530107246000	∅ 75 X 2,5	**2**	CIRCLIP	CIRCLIP ANNELLO ELASTICO	SEEGERING GRAPA CIRCULAR

Lube Oil Pump	**Filter**	**70-70**
Pompe A Huile	**Filtre**	
Schmieroelpumpe	**Filter**	
Pompa Per Lubrificazione	**Filtro**	
Bomba De Aceite Lubrificacion	**Filtro**	

1-WG82-002-A

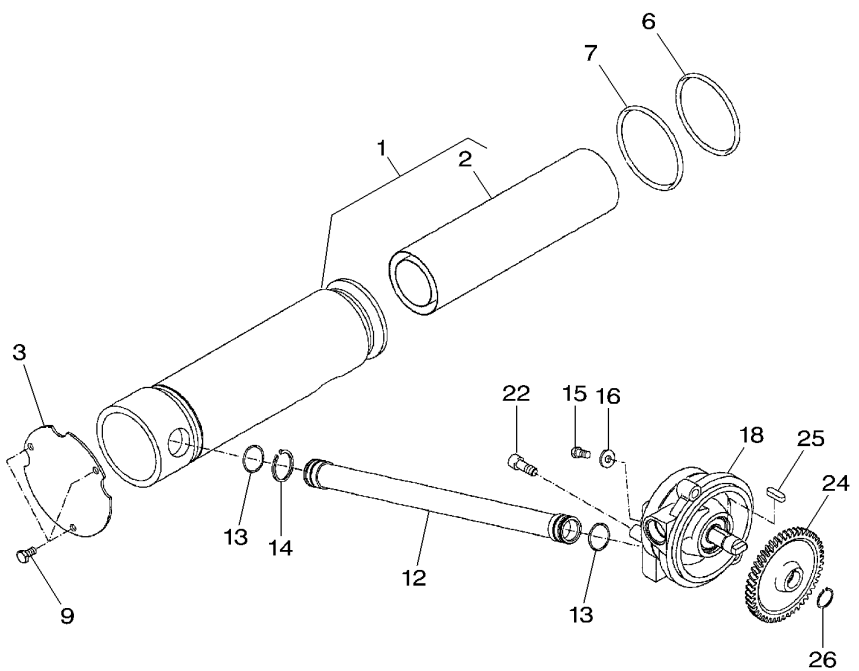

1	G916100490021		**1**	SUCTION FILTER	FILTRE ASPIRATIO SUCTION FILTER	SAUGFILTER FILTRO D'SUCCION
2	**F916100490010**	1	**1**	FILTER	FILTRE FILTRO	FILTER FILTRO
3	916100490180		**1**	COVER	COUVERCLE COPERCHIO	ABDECKUNG. CUBIERTA
6	**X548987066000**	∅ 105 X 3	**1**	O RING	JOINT TORIQUE GIUNTO DI TENUTA	O-RING JUNTA TOROIDAL
7	**X548989201000**	∅ 108 X 3	**1**	O RING	JOINT TORIQUE GIUNTO DI TENUTA	O-RING JUNTA TOROIDAL
9	X487527941000	M8 X 25	**3**	SCREW	VIS VITE	SCHRAUBE TORNILLO
12	H916100490010		**1**	PIPE	TUYAU TUBO	TUBE TUBO
13	X548878200000	∅ 27 X 3	**2**	O RING	JOINT TORIQUE GIUNTO DI TENUTA	O-RING JUNTA TOROIDAL
14	X530004146000	∅ 32 X 1,5	**1**	CIRCLIP	CIRCLIP ANNELLO ELASTICO	SEEGERING GRAPA CIRCULAR
15	X487526841000	M8 X 16	**1**	SCREW	VIS VITE	SCHRAUBE TORNILLO
16	178810030450		**1**	DISC	DISQUE DISCO	SCHEIBE DISCO
18	G916100490012		**1**	OIL PUMP	POMPE A HUILE POMPA PER OLIO	OELPUMPE BOMBA DE ACEITE
22	X485013305000	M10 X 35	**2**	HEX. SOCK. SCREW	VIS TETE HEX VITE PARKER	ZYLINDERSCHRAUBE TORN.CAB.HUECA
24	903100490100		**1**	SPUR GEAR	ENGRENAGE DROIT INGRANAGGIO DIR.	STIRNRAD RUEDA DE DIENTES
25	178107080030		**1**	KEY PARALLEL	CLAVETTE PARALEL CHIAVETTA PIANA	PASSFEDER CHAVETA PLANA
26	X530215446000	∅ 20 X 1,5	**1**	CIRCLIP	CIRCLIP ANNELLO ELASTICO	SEEGERING GRAPA CIRCULAR

Feed Pump Pompe D' Alimentation Foerderpumpe Pompa Alimentazione Bomba Alimentadora	System Comfort Systeme Confort Komfortbetaet Comandi Conforto Comando De Comodidad	70-75	

1-WG92-001-A

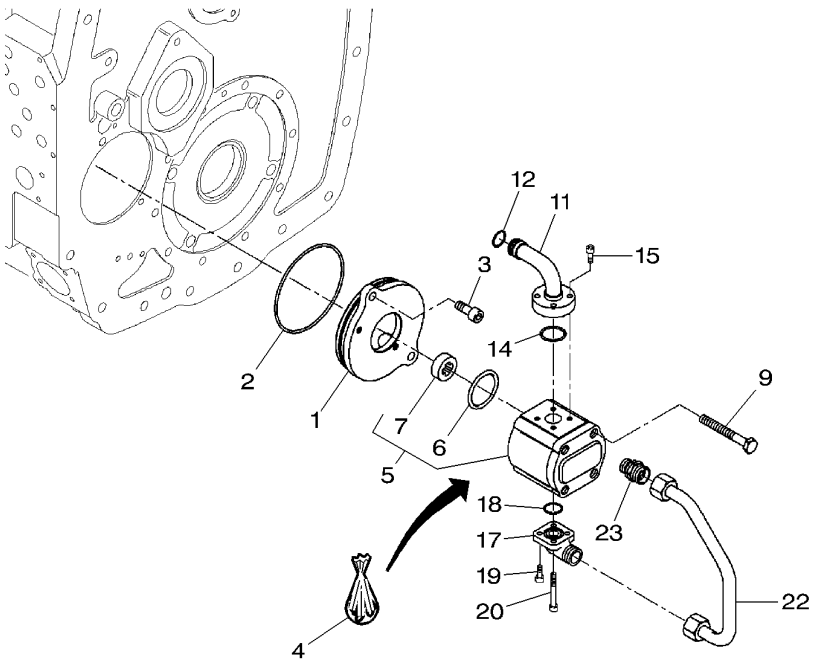

1	916100490131		**1**	COVER	COUVERCLE COPERCHIO	ABDECKUNG. CUBIERTA
2	X548995902000	∅ 115 X 2,5	**1**	O RING	JOINT TORIQUE GIUNTO DI TENUTA	O-RING JUNTA TOROIDAL
3	X485013205000	M10 X 30	**2**	HEX. SOCK. SCREW	VIS TETE HEX VITE PARKER	ZYLINDERSCHRAUBE TORN.CAB.HUECA
4	F279940050040		**1**	KIT, JOINT	JEU JOINTS KIT GIUNTO	DICHTUNGSSATZ JUEGO JUNTAS
5	G916100490030		**1**	GEAR PUMP	POMPE ENGRENAGES INGRANAGGIO POM.	ZAHNRADPUMPE BOMBA ENGRANAJES
6	F916100490020	5	**1**	O RING	JOINT TORIQUE GIUNTO DI TENUTA	O-RING JUNTA TOROIDAL
7	F279940050030	5	**1**	DRIVING	ENTRAINEUR CONDUCENTE	MITNEHMER DE MANDO
9	X487534001000	M10 X 105	**2**	SCREW	VIS VITE	SCHRAUBE TORNILLO
11	H718100490011		**1**	UNION	RACCORD RACCORDO	VERSCHRAUBUNG RACOR
12	X548848016000	∅ 16 X 3	**1**	O RING	JOINT TORIQUE GIUNTO DI TENUTA	O-RING JUNTA TOROIDAL
14	X548868966000	∅ 22,3 X 2,4	**1**	O RING	JOINT TORIQUE GIUNTO DI TENUTA	O-RING JUNTA TOROIDAL
15	X485005305000	M6 X 25	**4**	HEX. SOCK. SCREW	VIS TETE HEX VITE PARKER	ZYLINDERSCHRAUBE TORN.CAB.HUECA
17	X593816300000		**1**	FLANGED SOCKET	TUBULURE REBORD FLANGED SOCKET	FLANSCHSTUTZEN FLANGED SOCKET
18	X548860601000	∅ 20 X 2,5	**1**	O RING	JOINT TORIQUE GIUNTO DI TENUTA	O-RING JUNTA TOROIDAL
19	X485004405000	M16 X 16	**2**	HEX. SOCK. SCREW	VIS TETE HEX VITE PARKER	ZYLINDERSCHRAUBE TORN.CAB.HUECA
20	X485005405000	M16 X 30	**2**	HEX. SOCK. SCREW	VIS TETE HEX VITE PARKER	ZYLINDERSCHRAUBE TORN.CAB.HUECA
22	H916100490030		**1**	TUBE	TUBE TUBO.	ROHR TUBO.
23	X592501300000		**1**	THREAD. PART	PIECE A VISSER THREAD. PART	SCHRAUBSTUECK PIEZA ROSCADO

Gear Box Lubrication
Lubrification Boite De Vitesses
Getriebeschmierung
Lubrificazione Cambio Di Velocità
Lubrificacion Cambio De Velocidades

70-80

1-WG83-002-A

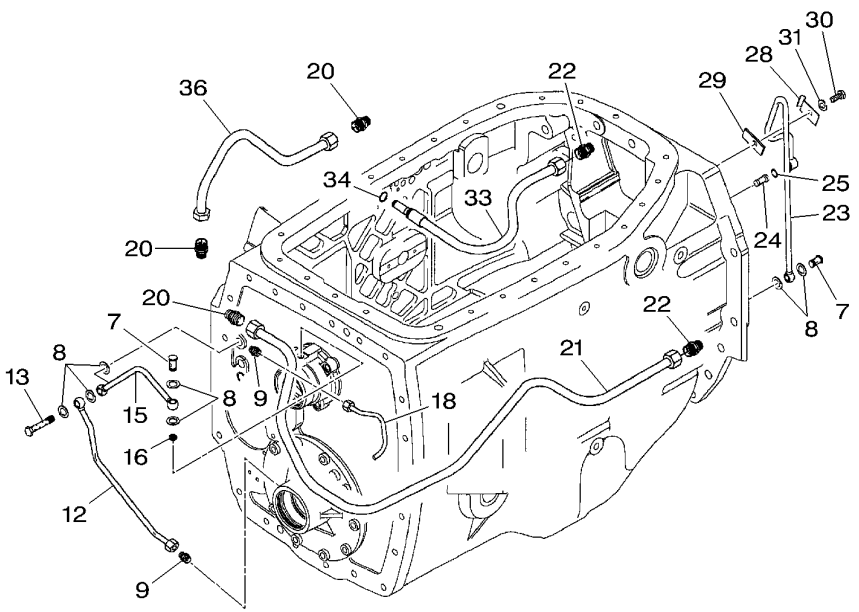

7	X494515300000		**2**	BANJO BOLT	VIS BANJO BULLONE BANJO	HOHLSCHRAUBE TORNILLO HUECO
8	X540003678000		**7**	RING	ANNEAU ANELLO	RING. ANILLO
9	X592501000000		**2**	THREAD. PART	PIECE A VISSER THREAD. PART	SCHRAUBSTUECK PIEZA ROSCADO
12	H903100470010	[F]	**1**	PIPE	TUYAU TUBO	TUBE TUBO
13	X494515201000		**1**	BANJO BOLT	VIS BANJO BULLONE BANJO	HOHLSCHRAUBE TORNILLO HUECO
15	H916100470131	[D]	**1**	PIPE	TUYAU TUBO	TUBE TUBO
16	916100470121		**1**	NOZZLE	NEZ INJECTEUR INIETTORE	DUESE TOBERA
18	H916100470110	[A]	**1**	PIPE	TUYAU TUBO	TUBE TUBO
20	X592501300000		**3**	THREAD. PART	PIECE A VISSER THREAD. PART	SCHRAUBSTUECK PIEZA ROSCADO
21	H916100470121	[C]	**1**	PIPE	TUYAU TUBO	TUBE TUBO
22	X592501303000	M16 X 1,5	**2**	THREAD. PART	PIECE A VISSER THREAD. PART	SCHRAUBSTUECK PIEZA ROSCADO
23	H916100470100	[B]	**1**	PIPE	TUYAU TUBO	TUBE TUBO
24	198100080520		**1**	LUB.OIL PIPE	TUYAU HUILE LUB TUBAZIONE OLIO	SCHMIEROELLEITG. TUBO ACEITE LUB
25	X548818015000	∅ 8 X 2,5	**1**	O RING	JOINT TORIQUE GIUNTO DI TENUTA	O-RING JUNTA TOROIDAL
28	268600130110		**1**	CLIP	PATTE D'ATTACHE FERMAGLIO	SCHELLE CLIP
29	025840020110		**1**	PLATE	PLAQUE PIASTRA	PLATTE PLATO
30	X487526841000	M8 X 16	**1**	SCREW	VIS VITE	SCHRAUBE TORNILLO
31	X450006308000		**1**	WASHER	RONDELLE RONDELLA	SCHEIBE ARANDELA
33	H916100620121	[C]	**1**	PRESSURE HOSE	FLEXIBLE HTE PR TUBO PRESSIONE	DRUCKSCHLAUCH TUBO DE PRESION
34	X530014200000	∅ 16 X 1,2	**1**	CIRCLIP	CIRCLIP ANNELLO ELASTICO	SEEGERING GRAPA CIRCULAR
36	H916100620011	[E]	**1**	PIPE	TUYAU TUBO	TUBE TUBO

[A] CONTROL PUMP
COMMANDE DE POMPE
PUMPE SCHALTUNG
COMANDO DI POMPA
MANDO DE BOMBA

[B] BEVEL GEAR LUBRICATION
LUBRIFICATION DU COUPLE CONIQUE
KEGELRADSATZ SCHMIERUNGSSYSTEM
SISTEMA DI LUBRIFICAZIONE DE COPPIA CONIC
SISTEMA DE ENGRASE DE CORONA Y PINON

Gear Box Lubrication
Lubrification Boite De Vitesses
Getriebeschmierung
Lubrificazione Cambio Di Velocità
Lubrificacion Cambio De Velocidades

70-80

1-WG83-002-A

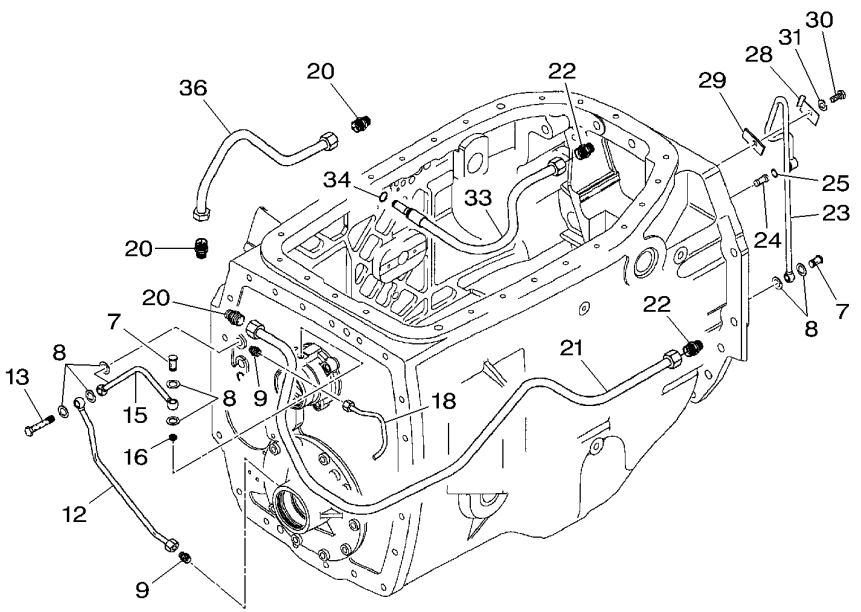

[C] REAR AXLE
ESSIEU ARRIERE
HINTERACHSE
ASSALE POSTERIORE
EJE TRASERO

[D] INPUTSHAFT
ARBRE D'ENTREE
ANTRIEBSWELLE
ALBERO ENTRATA
EJE PRIMARIO

[E] DISTRIBUTOR
DISTRIBUTEUR
STEUERVENTIL
DISTRIBUTORE
DISTRIBUIDOR

[F] BRAKE TRANSMISSION SHAFT
FREIN SUR ARBRE DE TRANSMISSION
ALLRADANTRIEBSWELLE BREMSE
FRENO SOPRA ALBERO TRASMISSIONE
FRENO SOBRE ARBOL DE TRANSMISION

Gear Box Lubrication	**Interior**	**70-85**
Lubrification Boite De Vitesses	**Interieur**	
Getriebeschmierung	**Innen**	
Lubrificazione Cambio Di Velocità	**Interni**	
Lubrificacion Cambio De Velocidades	**Internas**	

1-WG84-002-A

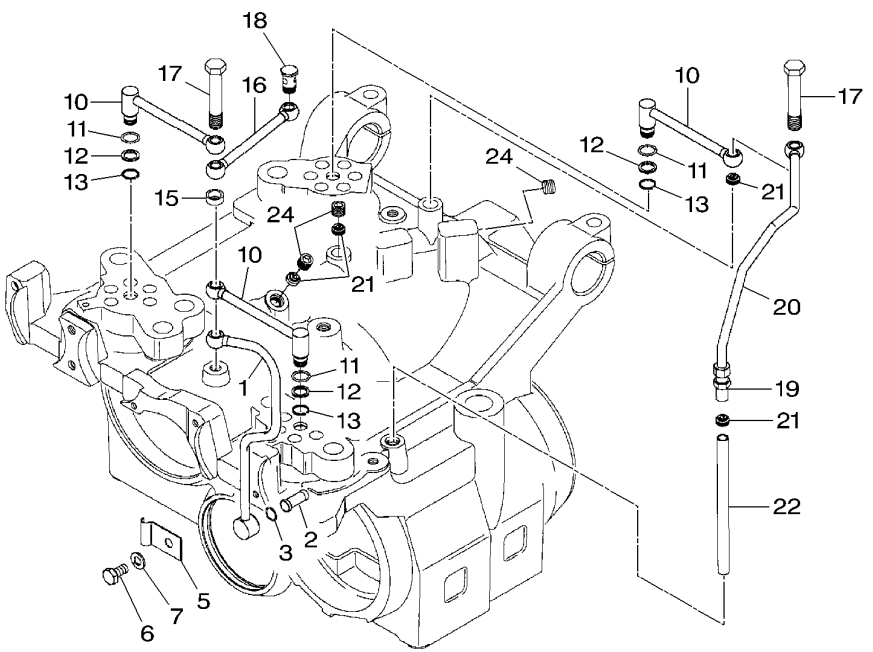

1	H916100470230	[A]	**1**	PIPE	TUYAU TUBO	TUBE TUBO
2	198100080520		**1**	LUB.OIL PIPE	TUYAU HUILE LUB TUBAZIONE OLIO	SCHMIEROELLEITG. TUBO ACEITE LUB
3	X548818015000	∅ 8 X 2,5	**1**	O RING	JOINT TORIQUE GIUNTO DI TENUTA	O-RING JUNTA TOROIDAL
5	268600130110		**1**	CLIP	PATTE D'ATTACHE FERMAGLIO	SCHELLE CLIP
6	X487527741000	M8 X 20	**1**	SCREW	VIS VITE	SCHRAUBE TORNILLO
7	X450006308000		**1**	WASHER	RONDELLE RONDELLA	SCHEIBE ARANDELA
10	H916100470200		**3**	PIPE	TUYAU TUBO	TUBE TUBO
11	X548833602000	∅ 12,3 X 2,4	**3**	O RING	JOINT TORIQUE GIUNTO DI TENUTA	O-RING JUNTA TOROIDAL
12	X534535346000		**3**	BACKUP RING	CONTRE BAGUE ANELLO APPOGGIO	STUETZRING ANILLA SOPORTE
13	X530001146000	∅ 12 X 1	**3**	CIRCLIP	CIRCLIP ANNELLO ELASTICO	SEEGERING GRAPA CIRCULAR
15	225100100160		**1**	SLEEVE	MANCHON MANICOTTO	HUELSE MANGUITO
16	H916100470220		**1**	PIPE	TUYAU TUBO	TUBE TUBO
17	916100470210		**2**	BANJO BOLT	VIS BANJO BULLONE BANJO	HOHLSCHRAUBE TORNILLO HUECO
18	X494515300000		**1**	BANJO BOLT	VIS BANJO BULLONE BANJO	HOHLSCHRAUBE TORNILLO HUECO
19	X592501000000		**1**	THREAD. PART	PIECE A VISSER THREAD. PART	SCHRAUBSTUECK PIEZA ROSCADO
20	X591652500000		**1**	PRESSURE HOSE	FLEXIBLE HTE PR TUBO PRESSIONE	DRUCKSCHLAUCH TUBO DE PRESION
21	916100470121		**4**	NOZZLE	NEZ INJECTEUR INIETTORE	DUESE TOBERA
22	916100470240		**1**	PIPE	TUYAU TUBO	TUBE TUBO
24	X483500600000	M12 X 1,5	**3**	PLUG	BOUCHON TAPPO	STOPFEN TAPON

[A] MAIN SHAFT
ARBRE PRINCIPAL
HAUPTWELLE
ALBERO PRINCIPALE
EJE PRINCIPAL

Hydraulic Circuit	**Transmission**	**70-90**
Circuit Hydraulique	**Transmission**	
Flussigkeitsumlauf	**Getriebe**	
Circuito Idraulico	**Trasmissione**	
Circuito Hidraulico	**Transmision**	

1-WG94-001-A

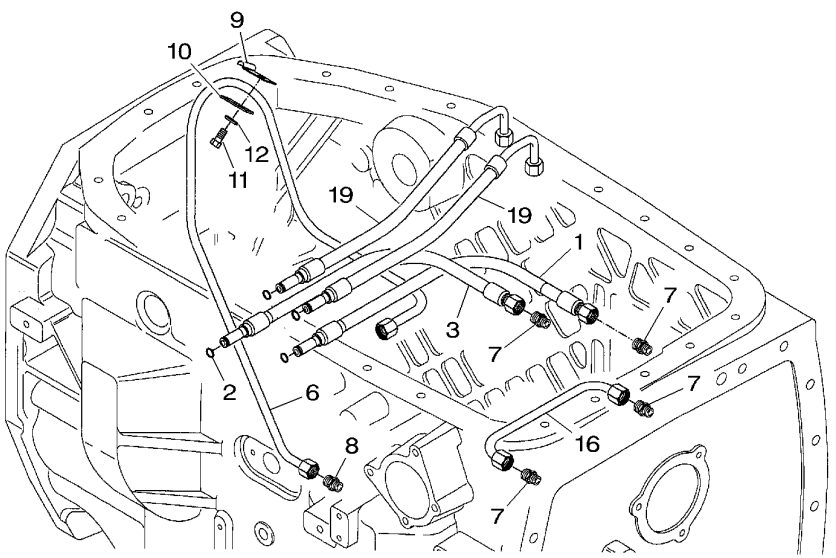

1	H916100620101	[A]	**1**	PRESSURE HOSE	FLEXIBLE HTE PR TUBO PRESSIONE	DRUCKSCHLAUCH TUBO DE PRESION
2	X531001146000	∅ 12 X 1,0	**5**	CIRCLIP	CIRCLIP ANNELLO ELASTICO	SEEGERING GRAPA CIRCULAR
3	H916100620101	[D]	**1**	PRESSURE HOSE	FLEXIBLE HTE PR TUBO PRESSIONE	DRUCKSCHLAUCH TUBO DE PRESION
6	H916101620011	[C]	**1**	PIPE	TUYAU TUBO	TUBE TUBO
7	X592501100000		**4**	THREAD. PART	PIECE A VISSER THREAD. PART	SCHRAUBSTUECK PIEZA ROSCADO
8	X592502500000		**1**	THREAD. PART	PIECE A VISSER THREAD. PART	SCHRAUBSTUECK PIEZA ROSCADO
9	268600130110		**1**	CLIP	PATTE D'ATTACHE FERMAGLIO	SCHELLE CLIP
10	025840020110		**1**	PLATE	PLAQUE PIASTRA	PLATTE PLATO
11	X487527741000	M8 X 20	**1**	SCREW	VIS VITE	SCHRAUBE TORNILLO
12	X450006308000		**1**	WASHER	RONDELLE RONDELLA	SCHEIBE ARANDELA
16	H916100620071	[A]	**1**	PIPE	TUYAU TUBO	TUBE TUBO
19	H411100620100	[B]	**2**	PRESSURE HOSE	FLEXIBLE HTE PR TUBO PRESSIONE	DRUCKSCHLAUCH TUBO DE PRESION

[A] REGULATOR
REGULATEUR
REGLER
REGOLATORE
REGULADOR

[B] SELECTOR RAM
VERIN DE SELECTION
SCHALTZYLINDER
CILINDRO DI SELETIONE
CILINDRO DE SELECION

[C] CONTROL
CONTROLE
STEUERUNG
CONTROLLO
MANDO

[D] SPEED RESTRICTOR
LIMITEUR DE VITESSE
GANGSPARDUESE
LIMITATORE VELOCITA
LIMITADOR DE VELOCIDAD

Hydraulic Circuit	Transmission	70-95	Hydraulic Valve Block
Circuit Hydraulique	Transmission		Bloc Valve Hydraulique
Flussigkeitsumlauf	Getriebe		Hydraulik Ventilblock
Circuito Idraulico	Trasmissione		Blocco Valvole Idraulico
Circuito Hidraulico	Transmision		Bloque Valvulas Hydraulico

1-WG94-002-A

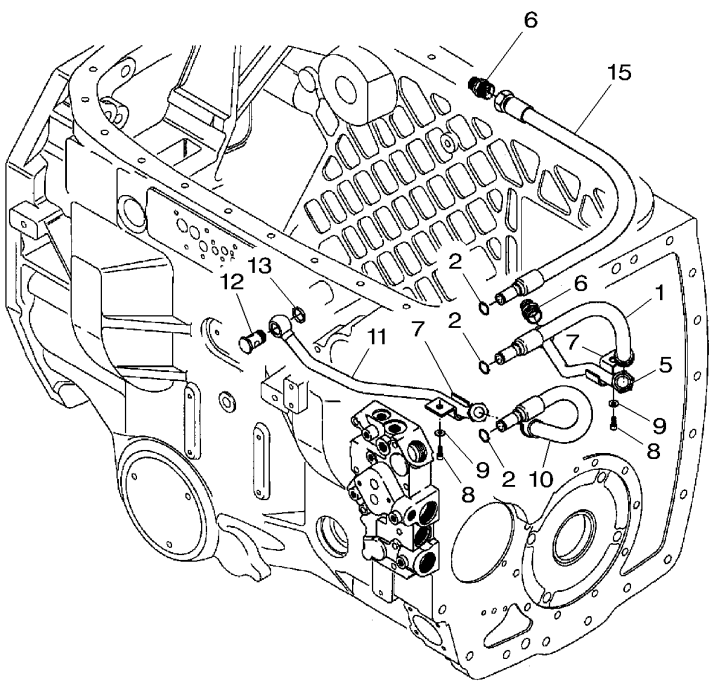

1	H916100620130	[A]	**1**	PRESSURE HOSE	FLEXIBLE HTE PR TUBO PRESSIONE	DRUCKSCHLAUCH TUBO DE PRESION
2	X530014200000	∅ 16 X 1,2	**3**	CIRCLIP	CIRCLIP ANNELLO ELASTICO	SEEGERING GRAPA CIRCULAR
5	H916101620020	[A]	**1**	PIPE	TUYAU TUBO	TUBE TUBO
6	X592501300000		**2**	THREAD. PART	PIECE A VISSER THREAD. PART	SCHRAUBSTUECK PIEZA ROSCADO
7	238950010010		**2**	CLIP	PATTE D'ATTACHE FERMAGLIO	SCHELLE CLIP
8	X485013105000	M10 X 25	**2**	HEX. SOCK. SCREW	VIS TETE HEX VITE PARKER	ZYLINDERSCHRAUBE TORN.CAB.HUECA
9	X450907508000		**2**	DISC	DISQUE DISCO	SCHEIBE DISCO
10	H916100620142	[B]	**1**	PRESSURE HOSE	FLEXIBLE HTE PR TUBO PRESSIONE	DRUCKSCHLAUCH TUBO DE PRESION
11	H916100620061	[B]	**1**	PIPE	TUYAU TUBO	TUBE TUBO
12	205950010340		**1**	BANJO BOLT	VIS BANJO BULLONE BANJO	HOHLSCHRAUBE TORNILLO HUECO
13	X542541001000		**1**	SEAL	JOINT ETANCHEITE GIUNTO ROTONDO	DICHTRING JUNTA REDONDA
15	H916100620121	[C]	**1**	PRESSURE HOSE	FLEXIBLE HTE PR TUBO PRESSIONE	DRUCKSCHLAUCH TUBO DE PRESION

[A] FEED SUPPLY
ALIMENTATION
ERNAHRUNG
ALIMENTAZIONE
ALIMENTACION

[B] OUTPUT
SORTIE
AUSTRITT
USCITA
SALIDA

[C] HOUSING
CARTER INT.
GEHAEUSE
CARCASSA
ALOJAMIENTO

Hydraulic Valve Block Bloc Valve Hydraulique Hydraulik Ventilblock Blocco Valvole Idraulico Bloque Valvulas Hydraulico	Pressure Filter Filtre Pression Druckfilter Filtro A Pressione Filtro Presion	70-100	

1-WG85-002-A

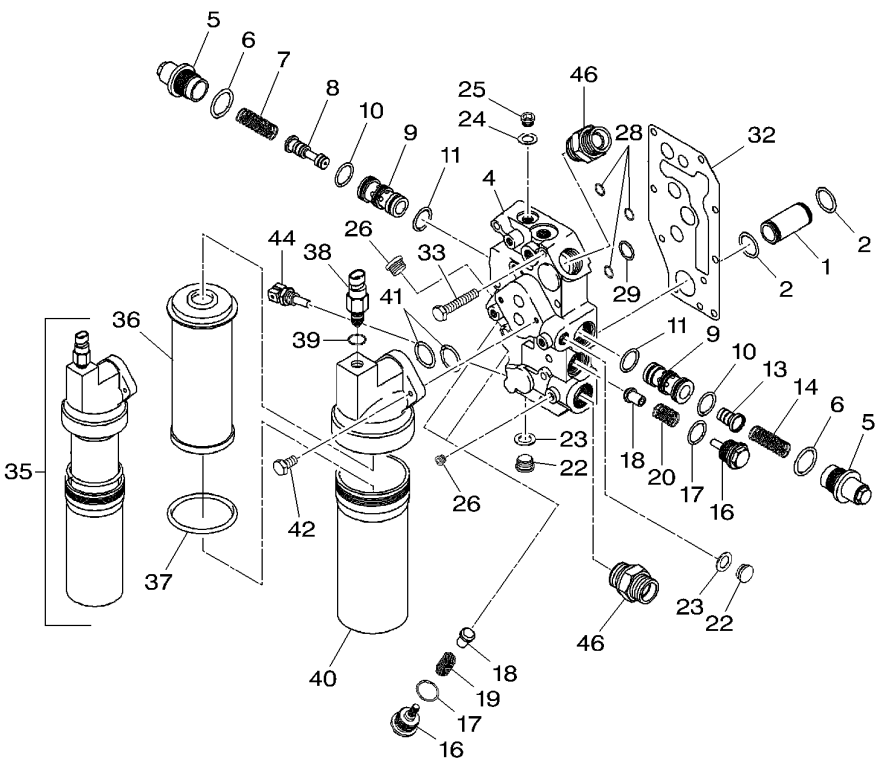

1	916100600220			**1**	PIPE	TUYAU TUBO	TUBE TUBO
2	X548871400000	∅	24 X 2,5	**2**	O RING	JOINT TORIQUE GIUNTO DI TENUTA	O-RING JUNTA TOROIDAL
4	G916100600020	[A]		**1**	VALVE BLOCK	BLOC VALVE BLOCCO VALVOLE	VENTILBLOCK BLOQUE VALVULAS
5	395100600040	4		**2**	SLEEVE	MANCHON MANICOTTO	HUELSE MANGUITO
6	X548881466000	4 ∅	28 X 3	**2**	O RING	JOINT TORIQUE GIUNTO DI TENUTA	O-RING JUNTA TOROIDAL
7	916100600030	4		**1**	COMP.SPRING	RESSORT DE COMPR MOLLA COMPOSTA	DRUCKFEDER RESORTE DE COMP.
8	916100600061	4		**1**	PISTON	PISTON PISTONE	KOLBEN PISTON
9	395100600020	4		**2**	CARTRIDGE	CARTOUCHE CARTUCCIA	PATRONE ELEMENTO FILTRO
10	X548871466000	4 ∅	24 X 2,5	**2**	O RING	JOINT TORIQUE GIUNTO DI TENUTA	O-RING JUNTA TOROIDAL
11	X548870566000	4 ∅	23,3 X 2,4	**2**	O RING	JOINT TORIQUE GIUNTO DI TENUTA	O-RING JUNTA TOROIDAL
13	916100600070	4		**1**	PISTON	PISTON PISTONE	KOLBEN PISTON
14	916100600040	4		**1**	COMP.SPRING	RESSORT DE COMPR MOLLA COMPOSTA	DRUCKFEDER RESORTE DE COMP.
16	916100600100	4		**3**	SCREW	VIS VITE	SCHRAUBE TORNILLO
17	X548868866000	4 ∅	22,2 X 3	**3**	O RING	JOINT TORIQUE GIUNTO DI TENUTA	O-RING JUNTA TOROIDAL
18	514100600080	4		**3**	CONE	CONE CONO	KONUS CONO
19	916100600050	4		**3**	COMP.SPRING	RESSORT DE COMPR MOLLA COMPOSTA	DRUCKFEDER RESORTE DE COMP.
20	514100600090	4		**1**	COMP.SPRING	RESSORT DE COMPR MOLLA COMPOSTA	DRUCKFEDER RESORTE DE COMP.
22	X483801600000	4	M18	**2**	SCREW	VIS VITE	SCHRAUBE TORNILLO
23	X540005478000	4 ∅	18 X 22	**2**	RING	ANNEAU ANELLO	RING. ANILLO
24	X540004278000	4 ∅	14 X 20	**1**	RING	ANNEAU ANELLO	RING. ANILLO
25	X483800800000	4	M14	**1**	PLUG	BOUCHON TAPPO	STOPFEN TAPON
26	X483900000000	4	M10	**6**	SCREW	VIS VITE	SCHRAUBE TORNILLO
28	X548829200000	4 ∅	11 X 3	**3**	O RING	JOINT TORIQUE GIUNTO DI TENUTA	O-RING JUNTA TOROIDAL
29	X548857366000	4 ∅	18,72 X 2,62	**1**	O RING	JOINT TORIQUE GIUNTO DI TENUTA	O-RING JUNTA TOROIDAL
32	916100600210			**1**	GASKET	JOINT GIUNTO PIANO	FLACHDICHTUNG JUNTA PLANA
33	X486528705000		M8 X 60	**8**	SCREW	VIS VITE	SCHRAUBE TORNILLO

Hydraulic Valve Block	Pressure Filter
Bloc Valve Hydraulique	Filtre Pression
Hydraulik Ventilblock	Druckfilter
Blocco Valvole Idraulico	Filtro A Pressione
Bloque Valvulas Hydraulico	Filtro Presion

70-100

1-WG85-002-A

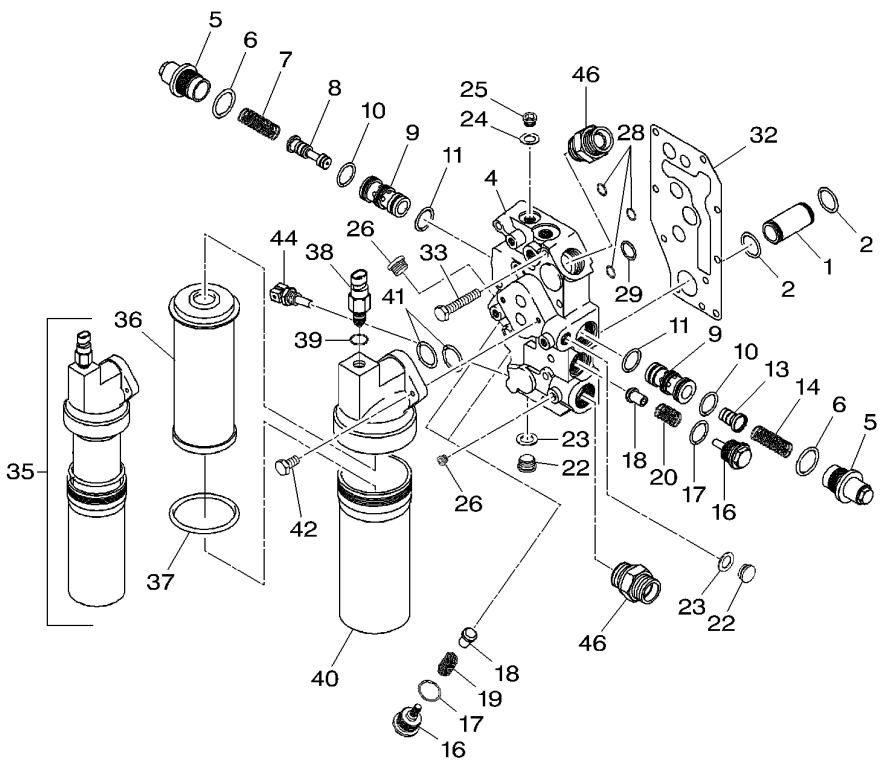

35	G916100600044			
36	**F916100600010**	35		
37	**X548960666000**	35	∅	76 X 2,5
38	**F916100600040**	35		
39	X548833602000	35	∅	12,3 X 2,4
40	F916100600030	35		
41	X548881466000		∅	28 X 3
42	X487528105000			M8 X 30
44			👁	90-95 No 38
46	X592501600000			

[A] ORDER + 916 100 600 210
COMMANDER EN PLUS 916 100 600 210
BESTELLE + 916 100 600 210
ORDINARE + 916 100 600 210
PEDIR + 916 100 600 210

1	FILTER	FILTRE FILTRO	FILTER FILTRO
1	FILTER ELEMENT	ELEMENT FILTRANT ELEMENTO FILTRAN	FILTEREINSATZ ELEMENTO FILTRAN
1	O RING	JOINT TORIQUE GIUNTO DI TENUTA	O-RING JUNTA TOROIDAL
1	SWITCH	INTERRUPTEUR INTERRUTTORE	SCHALTER INTERRUPTOR
1	O RING	JOINT TORIQUE GIUNTO DI TENUTA	O-RING JUNTA TOROIDAL
1	HOUSING	CARTER CARCASSA	GEHAEUSE ALOJAMIENTO
2	O RING	JOINT TORIQUE GIUNTO DI TENUTA	O-RING JUNTA TOROIDAL
2	SCREW	VIS VITE	SCHRAUBE TORNILLO
1	TEMP. SENSOR	SONDE TEMPERATUR TEMP. SENSOR	TEMPERATURGEBER EMISOR DEL CALOR
2	THREAD. PART	PIECE A VISSER THREAD. PART	SCHRAUBSTUECK PIEZA ROSCADO

Hydraulic Valve Block
Bloc Valve Hydraulique
Hydraulik Ventilblock
Blocco Valvole Idraulico
Bloque Valvulas Hydraulico

70-105

1-WG86-002-A

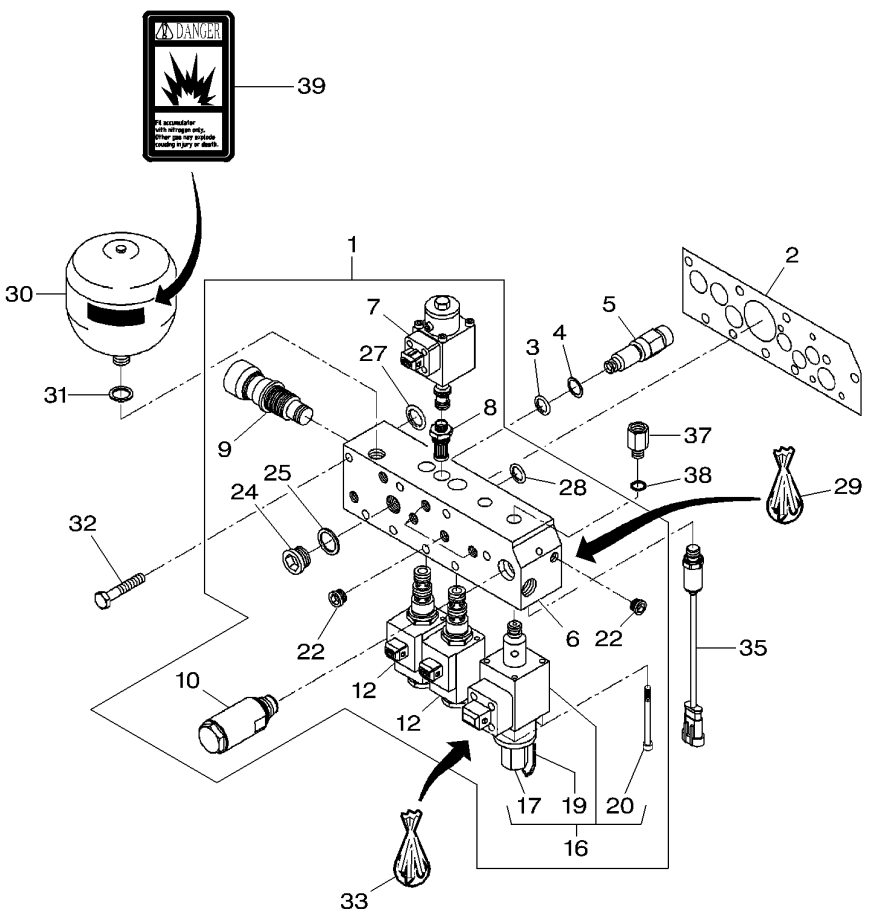

1	G916101600012		[E]	**1**	VALVE BLOCK	BLOC VALVE BLOCCO VALVOLE	VENTILBLOCK BLOQUE VALVULAS
2	916100600201			**1**	GASKET	JOINT GIUNTO PIANO	FLACHDICHTUNG JUNTA PLANA
3	X548809016000		∅ 5,3 X 2,4	**1**	O RING	JOINT TORIQUE GIUNTO DI TENUTA	O-RING JUNTA TOROIDAL
4	X566300600000		∅ 10 X 5,9 X 1	**1**	BACKUP RING	CONTRE BAGUE ANELLO APPOGGIO	STUETZRING ANILLA SOPORTE
5	716100600091			**1**	UNION	RACCORD RACCORDO	VERSCHRAUBUNG RACOR
6		1	REF. 1	**1**	BODY	CORPS CORPO	RUMPF CUERPO
7	**G916100600142**	1	[B]	**1**	SOLENOID VALVE	VALVE SOLENOIDE VALVOLASOLENOIDE	MAGNETVENTIL VALVULA SOLENOID
8	G916100600180	1		**1**	INSERT ELEMENT	EMPIECEMENT INSERT ELEMENT	EINSATZ INSERT ELEMENT
9	G916101600020	1		**1**	DISCHARGE VALVE	VALVE DECHARGE VALVOLA-SICUREZZ	DRUCKBEGR.VENTIL VALVULA ALIVIO
10	G718100600113	1		**1**	SLAVE CYLINDER	CYLINDRE RECEPT. SLAVE CYLINDER	KUPPL.NEHMERZYL. SLAVE CYLINDER
12	**G312100600110**	1	[C]	**2**	DIRECTIONAL VALV	VANNE COMMANDE DIRECTIONAL VALV	WEGEVENTIL DIRECTIONAL VALV
16	**G716100600122**	1	[A]	**1**	DISCHARGE VALVE	VALVE DECHARGE VALVOLA-SICUREZZ	DRUCKBEGR.VENTIL VALVULA ALIVIO
17	F716100600080	16	[G]	**1**	CAP NUT	ECROU BORGNE DADO A CAPPELLO	HUTMUTTER TUERCA DE TAPA
19	F716100600090	16		**1**	CHAIN	CHAINE CATENA	KETTE CADENA
20	F716100600040	16		**4**	HEX. SOCK. SCREW	VIS TETE HEX VITE PARKER	ZYLINDERSCHRAUBE TORN.CAB.HUECA
22	X483900000000	1	M10	**5**	SCREW	VIS VITE	SCHRAUBE TORNILLO
24	X483801200000	1	M16	**1**	SCREW	VIS VITE	SCHRAUBE TORNILLO
25	X540004878000	1	∅ 16 X 22	**1**	RING	ANNEAU ANELLO	RING. ANILLO
27	X548829200000	1	∅ 11 X 3	**1**	O RING	JOINT TORIQUE GIUNTO DI TENUTA	O-RING JUNTA TOROIDAL
28	X548813100000	1	∅ 6,5 X 3	**4**	O RING	JOINT TORIQUE GIUNTO DI TENUTA	O-RING JUNTA TOROIDAL
29	F916101600010			**1**	KIT, JOINT	JEU JOINTS KIT GIUNTO	DICHTUNGSSATZ JUEGO JUNTAS
30	H916100600010		[F]	**1**	PRESSURE TANK	ACCUMULATEUR PR SERBATOIO PRESS.	DRUCKSPEICHER DEPOSITO PRESION
31	X540004278000		∅ 14 X 20	**1**	RING	ANNEAU ANELLO	RING. ANILLO
32	X486528705000		M8 X 60	**7**	SCREW	VIS VITE	SCHRAUBE TORNILLO
33	F716100600100			**1**	KIT, JOINT	JEU JOINTS KIT GIUNTO	DICHTUNGSSATZ JUEGO JUNTAS
35			90-95 No 25	**1**	TRANSMITTER	TRANSMETTEUR TRASMETTITORE	UEBERTRAEGER TRANSMISOR

Hydraulic Valve Block
Bloc Valve Hydraulique
Hydraulik Ventilblock
Blocco Valvole Idraulico
Bloque Valvulas Hydraulico

70-105

1-WG86-002-A

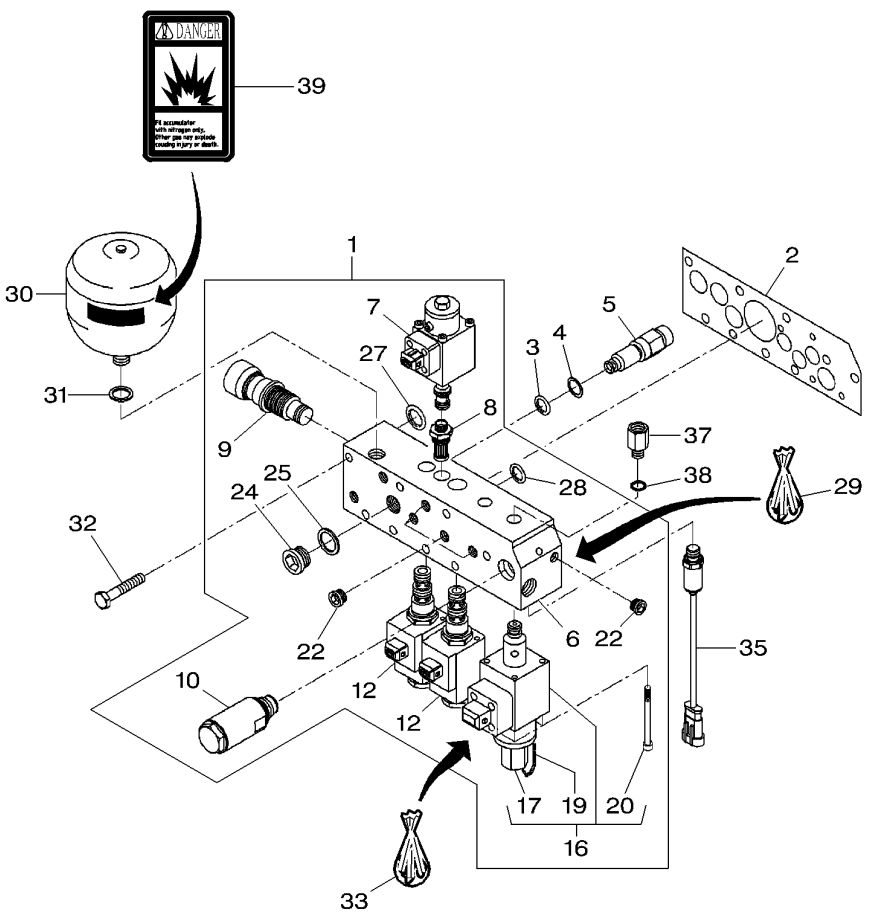

37	X596135200000		**1**	THREAD. PART	PIECE A VISSER THREAD. PART	SCHRAUBSTUECK PIEZA ROSCADO
38	X540003878000	∅ 12 X 18	**1**	RING	ANNEAU ANELLO	RING. ANILLO
39	3777021M3		**1**	DECAL	DECALCOMANIE DECALCOMANIA	AUFKLEBER CALCOMANIA

[A] CLUTCH
EMBRAYAGE
KUPPLUNG
FRIZIONE
EMBRAGUE

[B] EMERGENCY CONTROL
CONTROL DE SECOURS
NOTBETRIEB
CONTROLLO DI EMERGENCIA
CONTROLE DE EMERGENCIA

[C] GROUP GEAR SHIFTING
ENCLENCHEMENT DE GROUPE
GRUPPENSCHALTUNG
CAMBIO DI GRUPPO
CAMBIO DE GRUPO

[E] ORDER + 916 100 600 201
COMMANDER EN PLUS 916 100 600 201
BESTELLE + 916 100 600 201
ORDINARE + 916 100 600 201
PEDIR + 916 100 600 201

[F] THE APPROPRIATE SAFETY DECALS MUST BE ORDERED AND FITTED TO THIS PART
CETTE PIECE DOIT ETRE IMPERATIVEMENT COMMANDEE AVEC SA DECALCOMANIE DE SECURITE
DIESES TEIL MUSS UNBEDINGT ZUSAMMEN MIT DEM SICHER HEITSHINWEISSCHILD BESTELLT WERDEN
QUESTA PARTE DEVE ESSERE IMPERATIVAMENTO COMANDATA CON LA SUA DECALCOMANIA SICUREZZA
ESTA PARTE DEBE ENCARGARSE IMPERATIVAMENTE CON SU CALCOMANIA DE SEGURIDAD

[G] NOT SUPPLIED SEPARATELY
NON FOURNI SEPAREMENT
NICHT MITGELIEFERT BESTELLEN
NON SERVITO SEPARATAMENTE
NO SUMINISTRADOSEPARADAMENTE

Hydraulic Valve Block **Bloc Valve Hydraulique** **Hydraulik Ventilblock** **Blocco Valvole Idraulico** **Bloque Valvulas Hydraulico**	**Solenoid Valve** **Valve Solenoide** **Magnetventil** **Valvolasolenoide** **Valvula Solenoid**	**70-110**

1-WG91-001-A

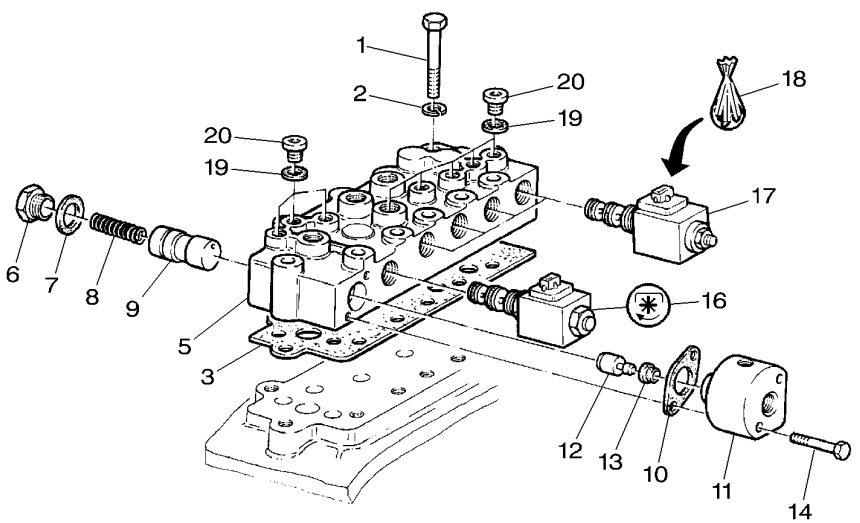

1	X486529005000		M8 X 70	
2	X520803901000			
3	822100600021			
5*	G903150600101		[A]	
6	F903150600030	5		
7	X548859400000	5	∅ 19,4 X 2,1	
8	822100600060	5		
9	F903150600010	5		
10	822100600070	5		
11	F903150600020	5		
12	822100070451	5		
13	X548301500000	5		
14	X487522341000	5	M6 X 50	
16	**G716150200060**	5		
17	**G411151600020**	5	[BCDEF]	
18	F411151600010	17		
19	X540003078000	5		
20	X483800000000	5	M10	

[A] ORDER + ITEM 3
COMMANDER EN PLUS ITEM 3
BESTELLE + ITEM 3
ORDINARE + ITEM 3
PEDIR + ITEM 3

[B] DIFFERENTIAL LOCK
BLOCAGE DE DIFFERENTIEL
VORDIFFERENTIALSPERRE
FERMO DIFFERENZIALE
BLOQUEO DIFERENCIAL

[C] POWER TAKE OFF 750 TR/MM
PRISE DE FORCE 750 TR/MM
ZAPFWELLE 750 TR/MM
PRESA DI FORZA 750 TR/MM
TOMA DE FUERZA 750 TR/MM

12	SCREW	VIS VITE	SCHRAUBE TORNILLO
12	LOCK WASHER	RONDELLE FREIN RONDELLA ARRESTO	SICHERUNGSRING ARANDELA SEGURID
1	GASKET	JOINT GIUNTO PIANO	FLACHDICHTUNG JUNTA PLANA
1	VALVE BLOCK	BLOC VALVE BLOCCO VALVOLE	VENTILBLOCK BLOQUE VALVULAS
1	SCREW	VIS VITE	SCHRAUBE TORNILLO
1	O RING	JOINT TORIQUE GIUNTO DI TENUTA	O-RING JUNTA TOROIDAL
1	COMP.SPRING	RESSORT DE COMPR MOLLA COMPOSTA	DRUCKFEDER RESORTE DE COMP.
1	PISTON	PISTON PISTONE	KOLBEN PISTON
1	GASKET	JOINT GIUNTO PIANO	FLACHDICHTUNG JUNTA PLANA
1	TIMING GEAR CASE	CARTER DISTRIBUT CARTER DISTRIBUZ	STEUERGEHAEUSE. CARTER DISTRIBUC
1	PISTON	PISTON PISTONE	KOLBEN PISTON
1	V-SEAL	BAGUE RAINURE V-SEAL	NUTRING V-SEAL
2	SCREW	VIS VITE	SCHRAUBE TORNILLO
1	VALVE	SOUPAPE VALVOLA	VENTIL VALVULA
4	DIRECTIONAL VALV	VANNE COMMANDE DIRECTIONAL VALV	WEGEVENTIL DIRECTIONAL VALV
1	KIT, JOINT	JEU JOINTS KIT GIUNTO	DICHTUNGSSATZ JUEGO JUNTAS
8	RING	ANNEAU ANELLO	RING. ANILLO
8	SCREW	VIS VITE	SCHRAUBE TORNILLO

Hydraulic Valve Block **Bloc Valve Hydraulique** **Hydraulik Ventilblock** **Blocco Valvole Idraulico** **Bloque Valvulas Hydraulico**	**Solenoid Valve** **Valve Solenoide** **Magnetventil** **Valvolasolenoide** **Valvula Solenoid**	**70-110**

1-WG91-001-A

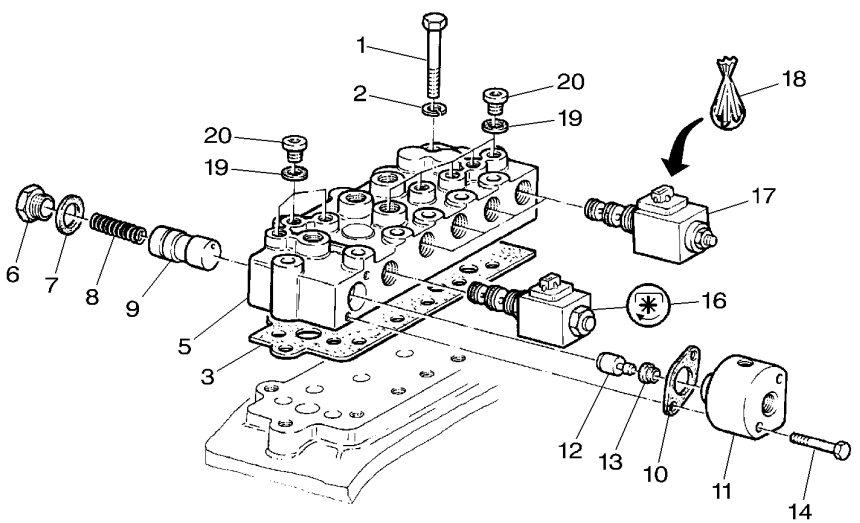

[D] POWER TAKE OFF 1000
PRISE DE FORCE 1000 TR/MM
ZAPFWELLE 1000
PRESA DI FORZA 1000
TOMA DE FUERZA 1000

[E] 4 WHEEL DRIVE
4 ROUES MOTRICES
ALLRADANTRIEB
4 ROUTE MOTRICI
4 RUEDAS MOTRICES

[F] PTO BRAKES
FREIN DE PTO
PTO BREMSE
FRENI PTO
FRENO TDF

Hydraulic Valve Block	Hydraulic Lines
Bloc Valve Hydraulique	Tuyauteries
Hydraulik Ventilblock	Leitungen
Blocco Valvole Idraulico	Tubazioni
Bloque Valvulas Hydraulico	Circuito

70-115

1-WG93-001-A

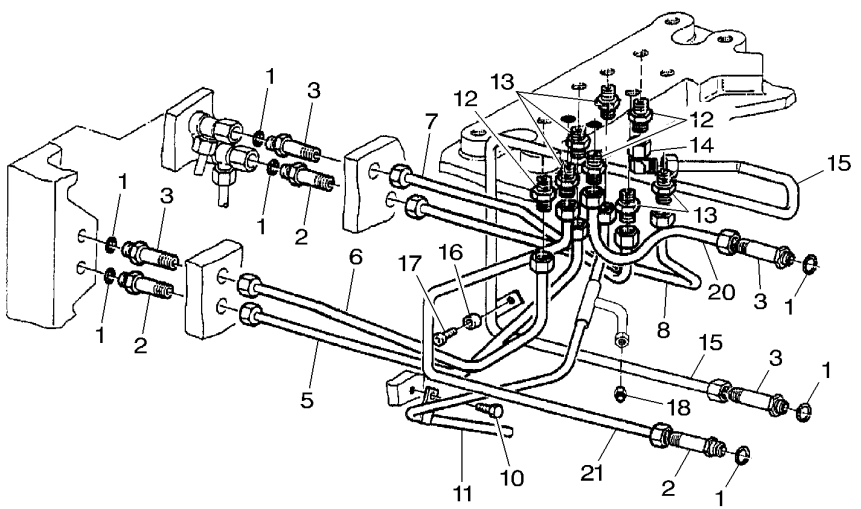

1	X548830066000	∅ 11,3 X 2,4	**7**	O RING	JOINT TORIQUE GIUNTO DI TENUTA O-RING JUNTA TOROIDAL
2	716150620060		**4**	UNION	RACCORD RACCORDO VERSCHRAUBUNG RACOR
3	822100620310		**3**	UNION	RACCORD RACCORDO VERSCHRAUBUNG RACOR
5	H926150620220		**1**	TUBE	TUBE TUBO. ROHR TUBO.
6	H926150620210		**1**	TUBE	TUBE TUBO. ROHR TUBO.
7	H926150620240		**1**	TUBE	TUBE TUBO. ROHR TUBO.
8	H926150620230		**1**	TUBE	TUBE TUBO. ROHR TUBO.
10	X487527305000	M8 X 10	**1**	SCREW	VIS VITE SCHRAUBE TORNILLO
11	H926150620200		**1**	TUBE	TUBE TUBO. ROHR TUBO.
12	X592501200000		**3**	THREAD. PART	PIECE A VISSER THREAD. PART SCHRAUBSTUECK PIEZA ROSCADO
13	X592501100000		**5**	THREAD. PART	PIECE A VISSER THREAD. PART SCHRAUBSTUECK PIEZA ROSCADO
14	X584316900000		**1**	UNION	RACCORD RACCORDO VERSCHRAUBUNG RACOR
15	H916100620260		**1**	TUBE	TUBE TUBO. ROHR TUBO.
16	822100620320		**1**	BUSH	BAGUE BOCCOLA RING CASQUILLO
17	X493613105000	M10 X 25	**1**	HEX. SOCK. SCREW	VIS TETE HEX VITE PARKER ZYLINDERSCHRAUBE TORN.CAB.HUECA
18	X592501100000		**1**	THREAD. PART	PIECE A VISSER THREAD. PART SCHRAUBSTUECK PIEZA ROSCADO
20	H916100620270		**1**	TUBE	TUBE TUBO. ROHR TUBO.
21	H916100620280		**1**	TUBE	TUBE TUBO. ROHR TUBO.

Oil Cooler
Refroidisseur D'Huile
Oelkuehler
Radiatore Olio
Enfriador El Aciete

70-120

Transmission Hydraulic
Hydraulique De Transmission
Hydraulikschutzvorr
Idraulico Di Trasmissione
Hydraulico De Transmision

1-WP19-015-F

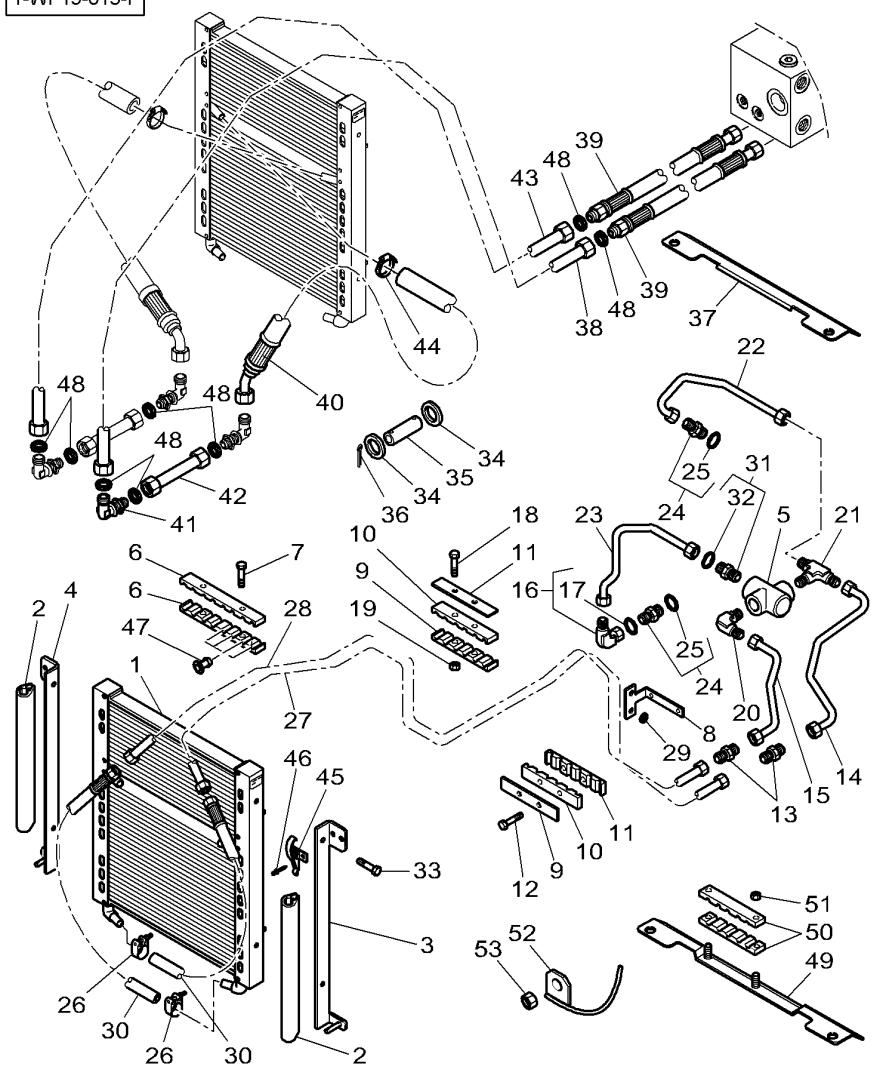

1	4279293M1		**1**	OIL COOLER	REFROIDISS HUILE RADIATORE OLIO	OELKUEHLER REFRIG DE ACEIT
2	3782344M1	◄► 475MM	**3**	GASKET	JOINT GIUNTO PIANO	FLACHDICHTUNG JUNTA PLANA
3*	4285325M1	◄	**1**	BAFFLE	CHICANE DEVIATORE	PRALLBLECH DESVIADOR
4*	4285324M1	►	**1**	BAFFLE	CHICANE DEVIATORE	PRALLBLECH DESVIADOR
5	4278849M1		**1**	VANE	VANNE ALETTA	LEITFLUEGEL ALETTA
6	4275070M3		**2**	BRIDLE	BRIDE BRIGLIA	LASCHENSPANNBAND BRIDA
7	3009257X1	M6 X 35	**2**	SCREW	VIS VITE	SCHRAUBE TORNILLO
8	4277411M3		**1**	SUPPORT	SUPPORT SOPPORTO	TRAGER SOPORTE
9*	4275691M3		**2**	BRIDLE	BRIDE BRIGLIA	LASCHENSPANNBAND BRIDA
10	4275692M2		**2**	BRIDLE	BRIDE BRIGLIA	LASCHENSPANNBAND BRIDA
11	4275693M2		**2**	BRIDLE	BRIDE BRIGLIA	LASCHENSPANNBAND BRIDA
12	3015134X1	M6 X 65	**2**	HEX. SOCK. SCREW	VIS TETE HEX VITE PARKER	ZYLINDERSCHRAUBE TORN.CAB.HUECA
13	3011222X1		**2**	UNION	RACCORD RACCORDO	VERSCHRAUBUNG RACOR
14	4279819M1		**1**	TUBE	TUBE TUBO.	ROHR TUBO.
15	4279814M1		**1**	TUBE	TUBE TUBO.	ROHR TUBO.
16	3011593X91	M30 X 2	**1**	UNION	RACCORD RACCORDO	VERSCHRAUBUNG RACOR
17	3011063X1	16	**1**	O RING	JOINT TORIQUE GIUNTO DI TENUTA	O-RING JUNTA TOROIDAL
18	1440922X1	M6 X 60	**2**	HEX. SOCK. SCREW	VIS TETE HEX VITE PARKER	ZYLINDERSCHRAUBE TORN.CAB.HUECA
19	1441500X1	M6	**2**	TOP LOCKNUT	ECROU AUTOFREINE DADO DI TESTA	SELBSTS.MUTTER CONTRATUERCA SUP
20	4279661M1		**1**	UNION	RACCORD RACCORDO	VERSCHRAUBUNG RACOR
21	4279820M1		**1**	UNION	RACCORD RACCORDO	VERSCHRAUBUNG RACOR
22	4279812M1		**1**	TUBE	TUBE TUBO.	ROHR TUBO.
23	4279811M2		**1**	TUBE	TUBE TUBO.	ROHR TUBO.
24	3011533X91	M33	**2**	UNION	RACCORD RACCORDO	VERSCHRAUBUNG RACOR
25	3011037X1	24	**1**	SEAL	JOINT ETANCHEITE GIUNTO ROTONDO	DICHTRING JUNTA REDONDA
26	3788734M1	∅ 27/29	**2**	CLAMP	COLLIER FASCETTA	HALTESCHELLE ABRAZADERA

Oil Cooler
Refroidisseur D'Huile
Oelkuehler
Radiatore Olio
Enfriador El Aciete

70-120

Transmission Hydraulic
Hydraulique De Transmission
Hydraulikschutzvorr
Idraulico Di Trasmissione
Hydraulico De Transmision

1-WP19-015-F

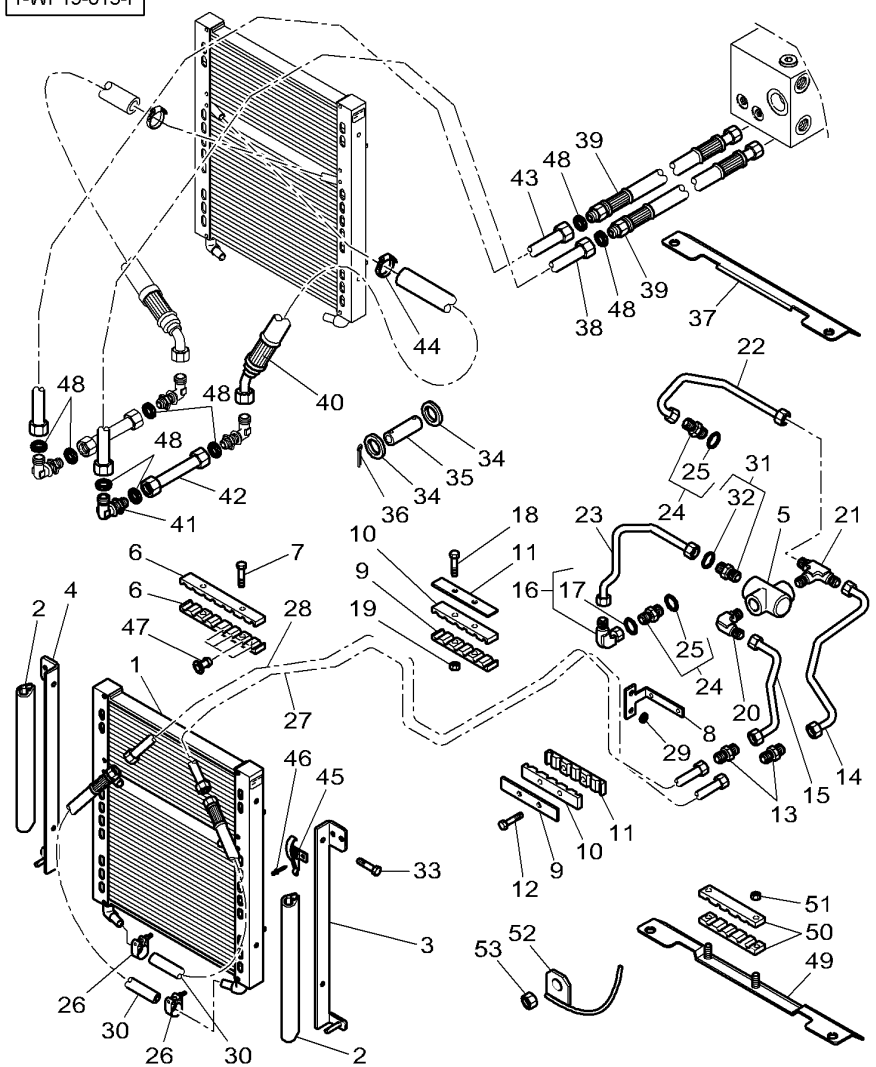

27	4276743M3		**1**	TUBE	TUBE TUBO.	ROHR TUBO.
28	4276742M3		**1**	TUBE	TUBE TUBO.	ROHR TUBO.
29	390597X1	∅ 10-30 X 2,5	**2**	FLAT WASHER	RONDELLE PLATE RONDELLE PIANA	UNTERLEGSCHEIBEN ARANDELA PLANA
30	4276141M2	◀▶ 1150 MM	**2**	HYDR. HOSE	FLEXIBLE TUBOFLEX IDRAUL	HYDR. SCHLAUCH TUBO HIDRAULICO
31	3011639X91		**1**	UNION	RACCORD RACCORDO	VERSCHRAUBUNG RACOR
32	3011037X1	31	**1**	SEAL	JOINT ETANCHEITE GIUNTO ROTONDO	DICHTRING JUNTA REDONDA
33	339560X1	M6 X 16	**4**	HEX. SOCK. SCREW	VIS TETE HEX VITE PARKER	ZYLINDERSCHRAUBE TORN.CAB.HUECA
34				NOT USED	NON UTILISE INUSATO	NICHT VERWENDET NO SE USA
35				NOT USED	NON UTILISE INUSATO	NICHT VERWENDET NO SE USA
36				NOT USED	NON UTILISE INUSATO	NICHT VERWENDET NO SE USA
37	4279824M2	▶| R321048	**1**	SPACER	ENTRETOISE DISTANZIALE	ABSTANDSTUECK DISCO ESPACIADOR
38*	4276744M4		**1**	TUBE	TUBE TUBO.	ROHR TUBO.
39*	4276142M2	◀▶ 1270 MM	**2**	HYDR. HOSE	FLEXIBLE TUBOFLEX IDRAUL	HYDR. SCHLAUCH TUBO HIDRAULICO
40	4276144M2	◀▶ 950 MM	**2**	HYDR. HOSE	FLEXIBLE TUBOFLEX IDRAUL	HYDR. SCHLAUCH TUBO HIDRAULICO
41	3011594X1		**4**	UNION	RACCORD RACCORDO	VERSCHRAUBUNG RACOR
42*	4276751M2		**2**	TUBE	TUBE TUBO.	ROHR TUBO.
43*	4276745M4		**1**	TUBE	TUBE TUBO.	ROHR TUBO.
44	4277422M1	∅ 23-25	**2**	CLAMP	COLLIER FASCETTA	HALTESCHELLE ABRAZADERA
45	3824482M91		**2**	KIT, FITTING	JEU MONTAGE KIT, FISSAGGIO	ANBAU-SATZ JUEGO DE MONTAJE
46	3010021X1		**4**	RIVET	RIVET RIVETTO	NIET REMACHE
47	3713404M1	[AB] ∅ 15-30	**X**	PLUG	BOUCHON TAPPO	STOPFEN TAPON
48*	3011808X1		**8**	BUSH	BAGUE BOCCOLA	RING CASQUILLO
49*	4279824M3	[C] ▶| R321049	**1**	SPACER	ENTRETOISE DISTANZIALE	ABSTANDSTUECK DISCO ESPACIADOR
50*	4286558M1	[C] ▶| R321049	**2**	BRIDLE	BRIDE BRIGLIA	LASCHENSPANNBAND BRIDA
51*	339030X1	[C] M6 ▶| R321049	**2**	NUT	ECROU DADO	MUTTER TUERCA

Oil Cooler
Refroidisseur D'Huile
Oelkuehler
Radiatore Olio
Enfriador El Aciete

70-120

Transmission Hydraulic
Hydraulique De Transmission
Hydraulikschutzvorr
Idraulico Di Trasmissione
Hydraulico De Transmision

1-WP19-015-F

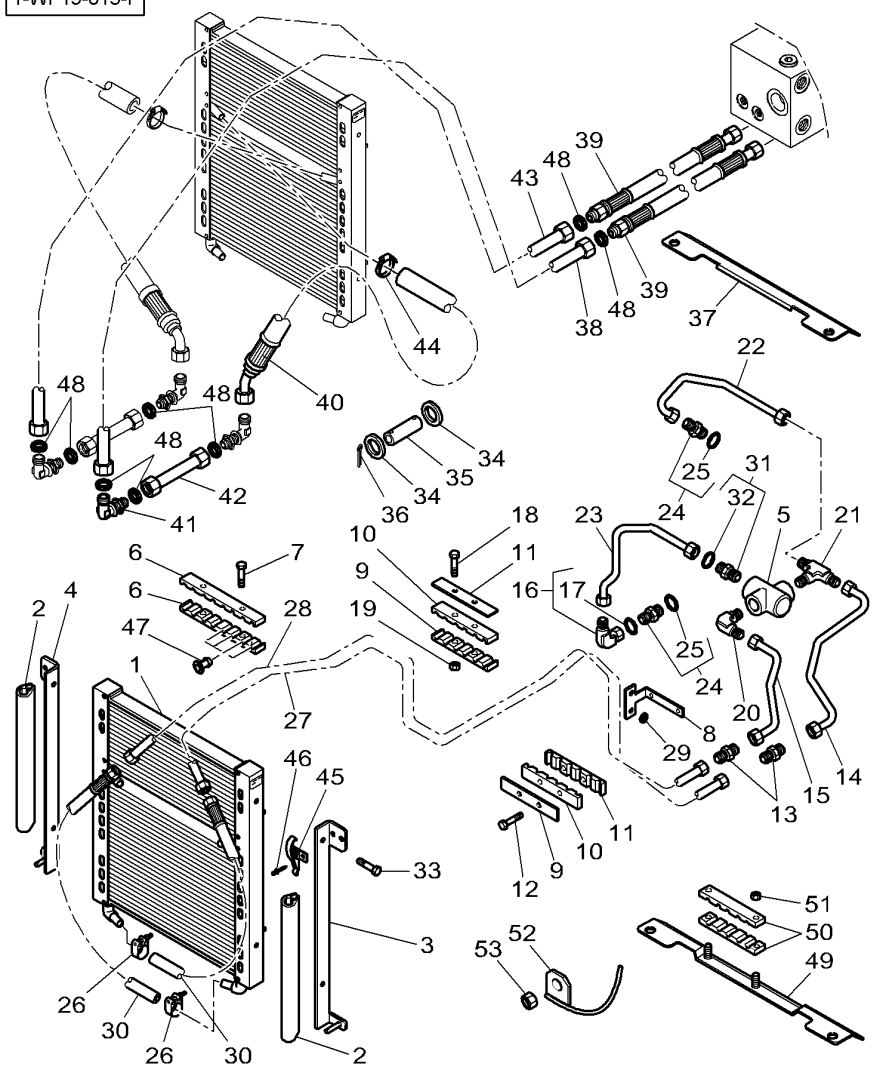

52*	4286717M1	➡ R298037	**1**	GUIDE	GUIDE GUIDA FUEHRUNG GUIA
53*	3019862X1	[C] ➡ R321049	**1**	NUT METRIC	ECROU METRIQUE DADO METRICO MUTTER METRISCH TUERCA METRICO

[A] WITHOUT FRONT LINKAGE
SANS ATTELAGE AVANT
OHNE VORDERE LENKER
SENZA ATTACCO ANTERIORE
SIN ENGANCHE DELANTERO

[B] WITHOUT HYDRAULIC COUPLING
SANS COUPLEUR HYDRAULIQUE
OHNE HYDR. - KUPPLUNG
SENZA GIUNTO IDRAULICO
SIN ACOPLADOR HIDRAULICO

[C] VALID ALSO FOR TRACTOR R313045
VALABLE EGALEMENT POUR TRACTEUR R313045
GULTIG EBENFALLS FUR TRAKTOR R313045
VALIDO ANCHE PER TRATTORE R313045
VALIDO TAMBIEN PARA TRACTOR R313045

Auxiliary Hydraulics
Hydraulique Auxiliaire
Zusatzhydraulik
Idraulica Ausiliare
Sistema Hidraulico Auxiliar

70-125

Tank
Reservoir
Behalter
Serbatoio
Deposito

1-WP27-014-C

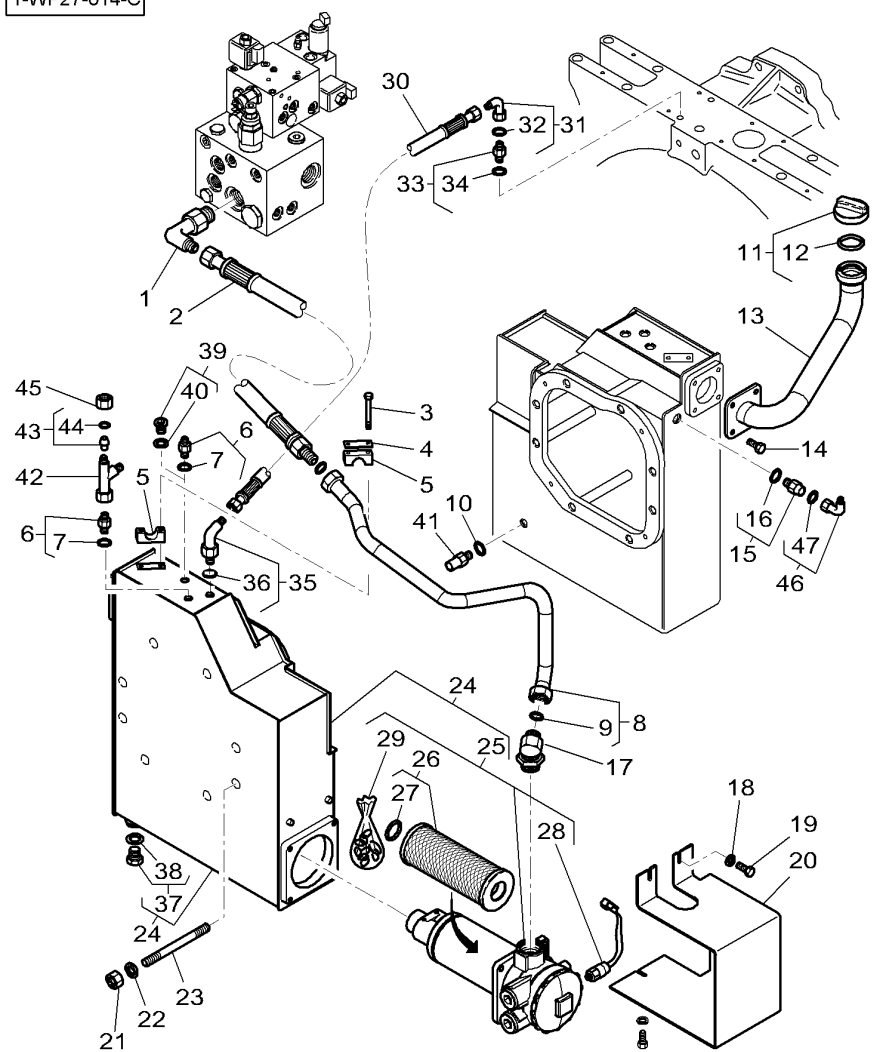

1	3787911M1	M33X2	**1**	UNION	RACCORD RACCORDO	VERSCHRAUBUNG RACOR
2	4276132M1	◄► 800MM	**1**	HYDR. HOSE	FLEXIBLE TUBOFLEX IDRAUL	HYDR. SCHLAUCH TUBO HIDRAULICO
3	391244X1	M6X45	**2**	HEX. SOCK. SCREW	VIS TETE HEX VITE PARKER	ZYLINDERSCHRAUBE TORN.CAB.HUECA
4	4273689M1		**1**	PLATE	PLAQUE PIASTRA	PLATTE PLATO
5	4273688M1		**2**	BRIDLE	BRIDE BRIGLIA	LASCHENSPANNBAND BRIDA
6	338717X91	M18X1.5	**2**	UNION	RACCORD RACCORDO	VERSCHRAUBUNG RACOR
7	338764X1	6	**1**	SEAL	JOINT ETANCHEITE GIUNTO ROTONDO	DICHTRING JUNTA REDONDA
8	4275578M1		**1**	TUBE	TUBE TUBO.	ROHR TUBO.
9*	3011810X1	9	**2**	BUSH	BAGUE BOCCOLA	RING CASQUILLO
10	1440012X1	∅ 14-20X1,5	**1**	GASKET	JOINT GIUNTO PIANO	FLACHDICHTUNG JUNTA PLANA
11	3011107X91	M33X2	**1**	PLUG	BOUCHON TAPPO	STOPFEN TAPON
12	3011037X1	11	**1**	SEAL	JOINT ETANCHEITE GIUNTO ROTONDO	DICHTRING JUNTA REDONDA
13	4274249M1		**1**	TUBE	TUBE TUBO.	ROHR TUBO.
14	339124X1	M8X16	**4**	HEX. SOCK. SCREW	VIS TETE HEX VITE PARKER	ZYLINDERSCHRAUBE TORN.CAB.HUECA
15	3011049X91	M16 X 1.5	**1**	UNION	RACCORD RACCORDO	VERSCHRAUBUNG RACOR
16	3019396X1	15	**1**	O RING	JOINT TORIQUE GIUNTO DI TENUTA	O-RING JUNTA TOROIDAL
17	4276644M1		**1**	UNION	RACCORD RACCORDO	VERSCHRAUBUNG RACOR
18	390971X1		**3**	FLAT WASHER	RONDELLE PLATE RONDELLE PIANA	UNTERLEGSCHEIBEN ARANDELA PLANA
19	339230X1	M6X10	**3**	HEX. SOCK. SCREW	VIS TETE HEX VITE PARKER	ZYLINDERSCHRAUBE TORN.CAB.HUECA
20	4275579M2		**1**	COWL	GARANT CAPPOTTATURA	AUFSATZ CAPERUZA
21	339402X1	M10	**8**	NUT SPECIAL	ECROU SPECIAL DADO SPECIALE	SPEZIALMUTTER TUERCA ESPECIAL
22	390734X1		**8**	FLAT WASHER	RONDELLE PLATE RONDELLE PIANA	UNTERLEGSCHEIBEN ARANDELA PLANA
23	3010684X1	M10X212	**8**	STUD	GOUJON SPINOTTO FILETT.	STEHBOLZEN ESPARRAGO ROSCA.
24	4278269M91		**1**	HYDRAULIC TANK	RESERVOIR HYDR SERBATOIO IDRAUL	HYDRAULIKTANK DEPOSITO HIDRAU
25	4275577M91	24	**1**	FILTER	FILTRE FILTRO	FILTER FILTRO
26	**4276648M1**	25	**1**	FILTER ELEMENT	ELEMENT FILTRANT ELEMENTO FILTRAN	FILTEREINSATZ ELEMENTO FILTRAN

Auxiliary Hydraulics
Hydraulique Auxiliaire
Zusatzhydraulik
Idraulica Ausiliare
Sistema Hidraulico Auxiliar

70-125

Tank
Reservoir
Behalter
Serbatoio
Deposito

1-WP27-014-C

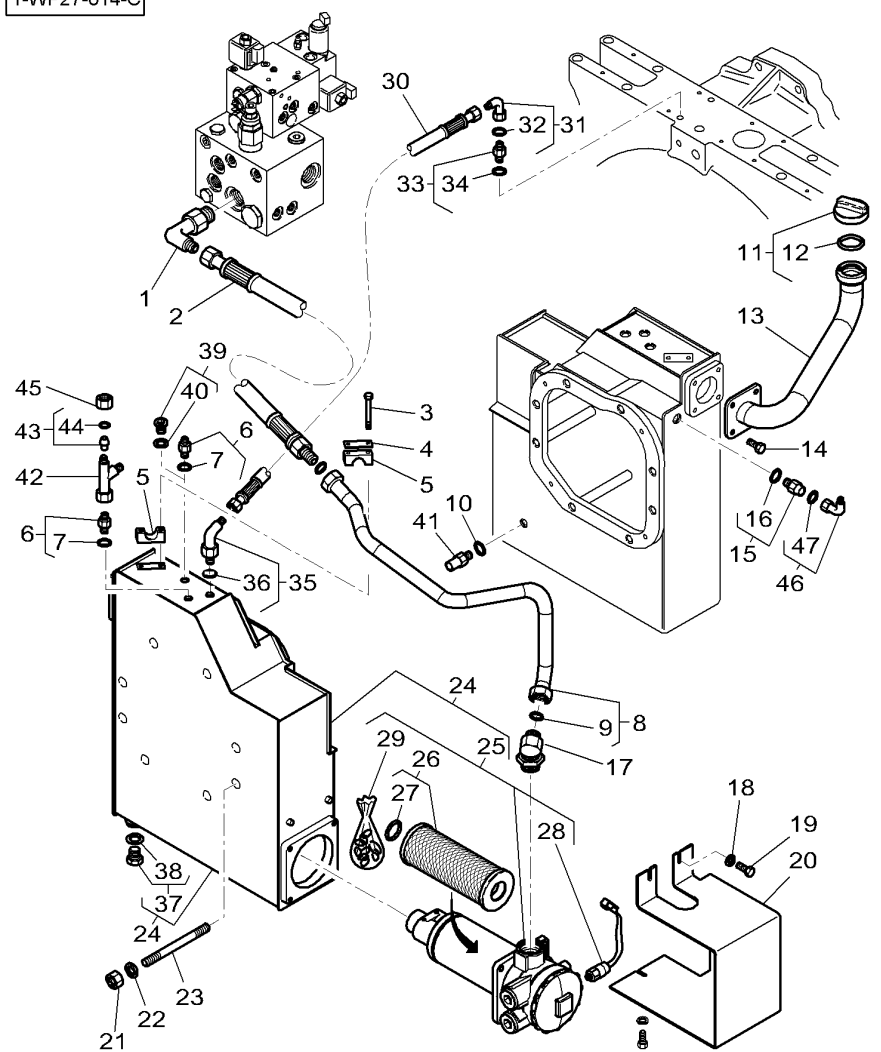

27	**3907428M1**	26		**1**	O RING	JOINT TORIQUE GIUNTO DI TENUTA	O-RING JUNTA TOROIDAL
28	**3789379M1**	25		**1**	INDICATOR	INDICATEUR INDICATORE	ANZEIGER INDICADOR
29	3907429M91	25		**1**	KIT, JOINT	JEU JOINTS KIT GIUNTO	DICHTUNGSSATZ JUEGO JUNTAS
30	4276666M1	◀▶ 650MM		**1**	HYDR. HOSE	FLEXIBLE TUBOFLEX IDRAUL	HYDR. SCHLAUCH TUBO HIDRAULICO
31	3011082X91			**1**	ELBOW	COUDE GOMITO	WINKELSTUECK CODO
32	3011144X1	31		**1**	O RING	JOINT TORIQUE GIUNTO DI TENUTA	O-RING JUNTA TOROIDAL
33	338716X91	M12X1.5		**1**	UNION	RACCORD RACCORDO	VERSCHRAUBUNG RACOR
34	338761X1	33		**1**	O RING	JOINT TORIQUE GIUNTO DI TENUTA	O-RING JUNTA TOROIDAL
35	4276133M1	M16X1.5		**1**	UNION	RACCORD RACCORDO	VERSCHRAUBUNG RACOR
36	338763X1	35		**1**	SEAL	JOINT ETANCHEITE GIUNTO ROTONDO	DICHTRING JUNTA REDONDA
37	3907614M91	24	M26 X 1,5	**1**	NYLINER	BOUCHON. NYLINER	STOPFEN. NYLINER
38	3907615M1	37		**1**	GASKET	JOINT GIUNTO PIANO	FLACHDICHTUNG JUNTA PLANA
39	3011103X91	[A] M18 X 1.5		**1**	PLUG	BOUCHON TAPPO	STOPFEN TAPON
40	338764X1	39		**1**	SEAL	JOINT ETANCHEITE GIUNTO ROTONDO	DICHTRING JUNTA REDONDA
41	**3618249M1**			**1**	INDUCTIVE SENSOR	CAPTEUR INDUCTIF SENSORE INDUTTIV	INDUKT EMPFANGER CAPTADOR INDUCTI
42*	3011089X91	[B] ➡ R321049		**1**	UNION	RACCORD RACCORDO	VERSCHRAUBUNG RACOR
43*	3011136X91	[B] ➡ R321049		**1**	TAP	OBTURATEUR. TAPPO*	HAHN GRIFO
44*	3011147X1	43	[B] ➡ R321049	**1**	O RING	JOINT TORIQUE GIUNTO DI TENUTA	O-RING JUNTA TOROIDAL
45*	3011119X1	[B] ➡ R321049		**1**	NUT	ECROU DADO	MUTTER TUERCA
46*	3011084X91	➡ R285063		**1**	UNION	RACCORD RACCORDO	VERSCHRAUBUNG RACOR
47*	3011146X1	46		**1**	O RING	JOINT TORIQUE GIUNTO DI TENUTA	O-RING JUNTA TOROIDAL

[A] WITHOUT FRONT LINKAGE
SANS ATTELAGE AVANT
OHNE VORDERE LENKER
SENZA ATTACCO ANTERIORE
SIN ENGANCHE DELANTERO

Auxiliary Hydraulics **Hydraulique Auxiliaire** **Zusatzhydraulik** **Idraulica Ausiliare** **Sistema Hidraulico Auxiliar**	**70-125**	**Tank** **Reservoir** **Behalter** **Serbatoio** **Deposito**

1-WP27-014-C

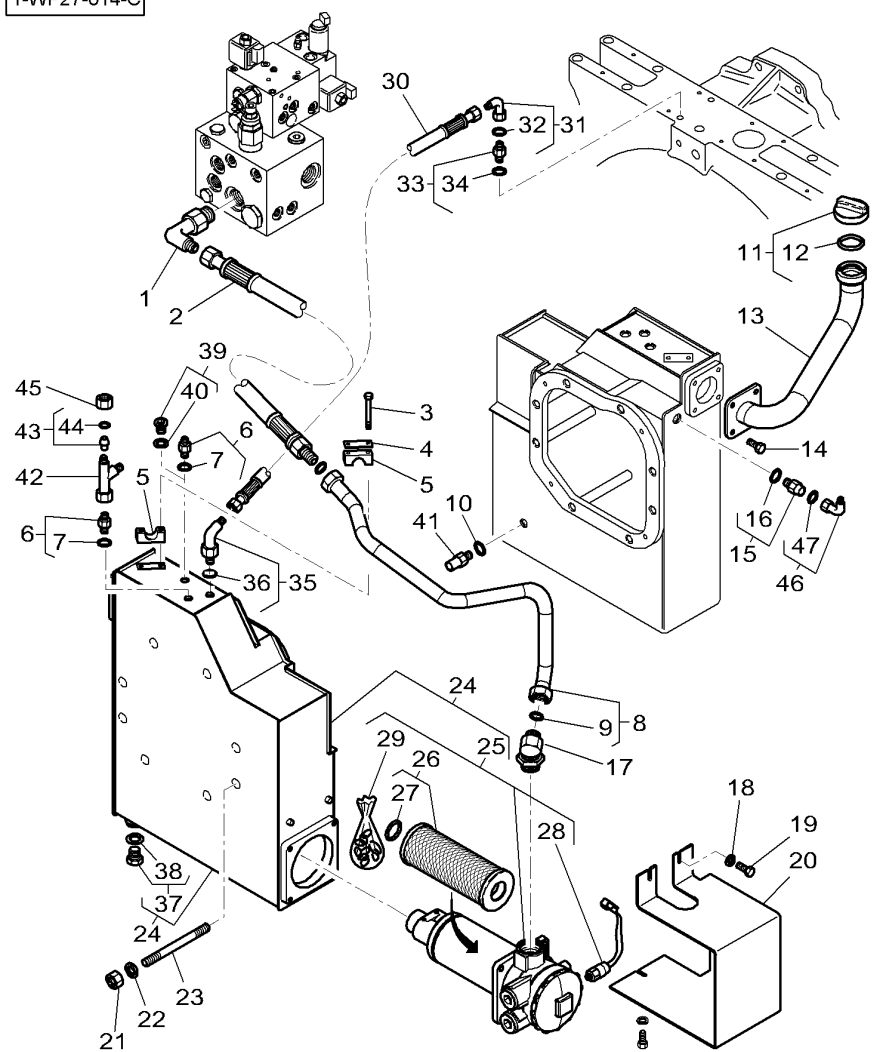

[B] VALID ALSO FOR TRACTOR R313045
VALABLE EGALEMENT POUR TRACTEUR R313045
GULTIG EBENFALLS FUR TRAKTOR R313045
VALIDO ANCHE PER TRATTORE R313045
VALIDO TAMBIEN PARA TRACTOR R313045

Auxiliary Hydraulics
Hydraulique Auxiliaire
Zusatzhydraulik
Idraulica Ausiliare
Sistema Hidraulico Auxiliar

70-130

Accumulator - Up To R321048 Except R313045
Accumulateur - Jusqu Au R321048 Sauf R313045
Akkumulator - Bis R321048 Außer R313045
Accumulatore - Fino Alla R321048 Eccetto R313045
Acumulador - Hasta R321048 Excepto R313045

1-WP27-006-B

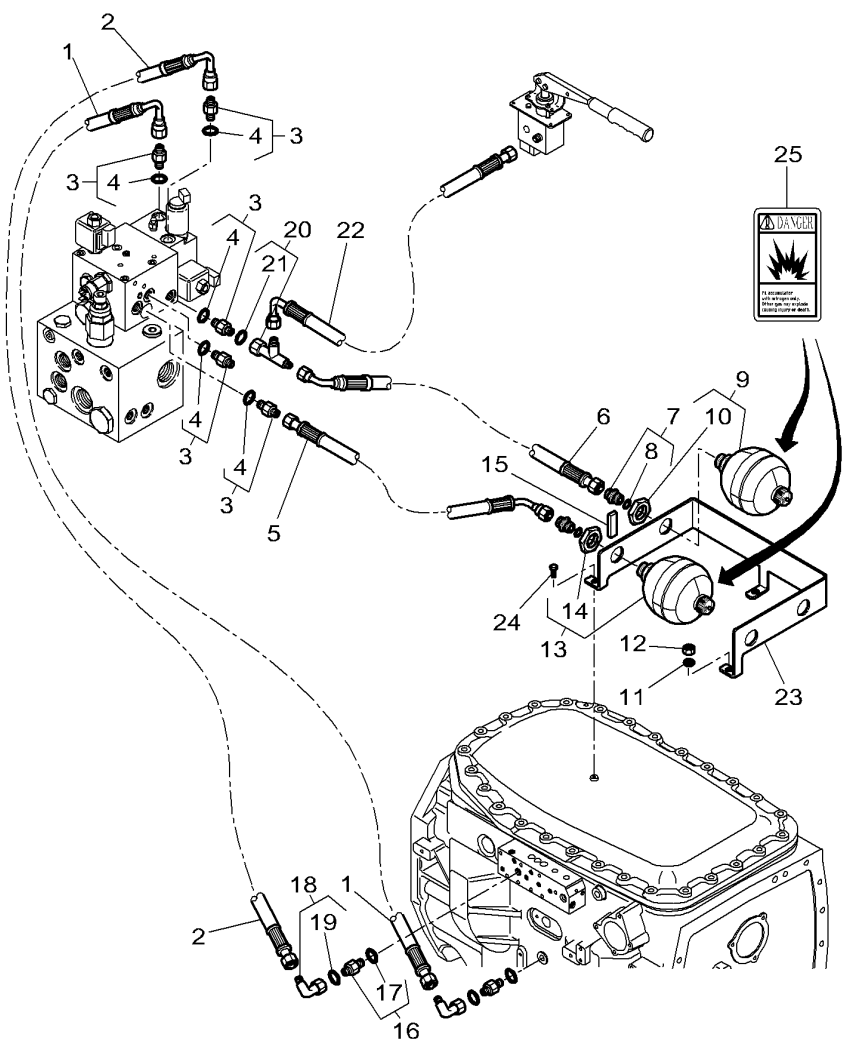

1	4276148M1	[C] 18B ◀▶ 1080MM	**1**	HYDR. HOSE	FLEXIBLE TUBOFLEX IDRAUL	HYDR. SCHLAUCH TUBO HIDRAULICO
2	4276147M1	[B] 18B ◀▶ 750MM	**1**	HYDR. HOSE	FLEXIBLE TUBOFLEX IDRAUL	HYDR. SCHLAUCH TUBO HIDRAULICO
3	3011038X91	M14X1.5	**5**	UNION	RACCORD RACCORDO	VERSCHRAUBUNG RACOR
4	338762X1	3	**1**	SEAL	JOINT ETANCHEITE GIUNTO ROTONDO	DICHTRING JUNTA REDONDA
5	4276151M1	◀▶ 550MM	**1**	HYDR. HOSE	FLEXIBLE TUBOFLEX IDRAUL	HYDR. SCHLAUCH TUBO HIDRAULICO
6	4276149M1	◀▶ 500MM	**1**	HYDR. HOSE	FLEXIBLE TUBOFLEX IDRAUL	HYDR. SCHLAUCH TUBO HIDRAULICO
7	3011550X91	1/2	**2**	UNION	RACCORD RACCORDO	VERSCHRAUBUNG RACOR
8	3011154X1	7	**1**	GASKET	JOINT GIUNTO PIANO	FLACHDICHTUNG JUNTA PLANA
9	4275558M1	[A] 108B	**1**	ACCUMULATOR	ACCUMULATEUR ACCUMULATORE	AKKUMULATOR ACUMULADOR
10	3907430M1	9	**1**	NUT	ECROU DADO	MUTTER TUERCA
11	390735X1		**2**	FLAT WASHER	RONDELLE PLATE RONDELLE PIANA	UNTERLEGSCHEIBEN ARANDELA PLANA
12	3019862X1	M12	**2**	NUT METRIC	ECROU METRIQUE DADO METRICO	MUTTER METRISCH TUERCA METRICO
13	4276645M1	[A] 44B	**1**	ACCUMULATOR	ACCUMULATEUR ACCUMULATORE	AKKUMULATOR ACUMULADOR
14	3907430M1	13	**1**	NUT	ECROU DADO	MUTTER TUERCA
15	3580695M1	◀▶ 80MM	**1**	GASKET	JOINT GIUNTO PIANO	FLACHDICHTUNG JUNTA PLANA
16	3011547X91	M16X1.5	**2**	UNION	RACCORD RACCORDO	VERSCHRAUBUNG RACOR
17	338763X1	16	**1**	SEAL	JOINT ETANCHEITE GIUNTO ROTONDO	DICHTRING JUNTA REDONDA
18	3011543X91	M16X1.5	**2**	UNION	RACCORD RACCORDO	VERSCHRAUBUNG RACOR
19	3011144X1	18	**1**	O RING	JOINT TORIQUE GIUNTO DI TENUTA	O-RING JUNTA TOROIDAL
20	3011544X91	M16X1,5	**1**	UNION	RACCORD RACCORDO	VERSCHRAUBUNG RACOR
21	3011144X1	20	**1**	O RING	JOINT TORIQUE GIUNTO DI TENUTA	O-RING JUNTA TOROIDAL
22	4276150M1	◀▶ 650MM	**1**	HYDR. HOSE	FLEXIBLE TUBOFLEX IDRAUL	HYDR. SCHLAUCH TUBO HIDRAULICO
23	4275571M3		**1**	SUPPORT	SUPPORT SOPPORTO	TRAGER SOPORTE
24	339282X1	M10X16	**1**	HEX. SOCK. SCREW	VIS TETE HEX VITE PARKER	ZYLINDERSCHRAUBE TORN.CAB.HUECA
25	3777021M3		**1**	DECAL	DECALCOMANIE DECALCOMANIA	AUFKLEBER CALCOMANIA

Auxiliary Hydraulics **Hydraulique Auxiliaire** **Zusatzhydraulik** **Idraulica Ausiliare** **Sistema Hidraulico Auxiliar**	**70-130**	**Accumulator - Up To R321048 Except R313045** **Accumulateur - Jusqu Au R321048 Sauf R313045** **Akkumulator - Bis R321048 Außer R313045** **Accumulatore - Fino Alla R321048 Eccetto R313045** **Acumulador - Hasta R321048 Excepto R313045**

1-WP27-006-B

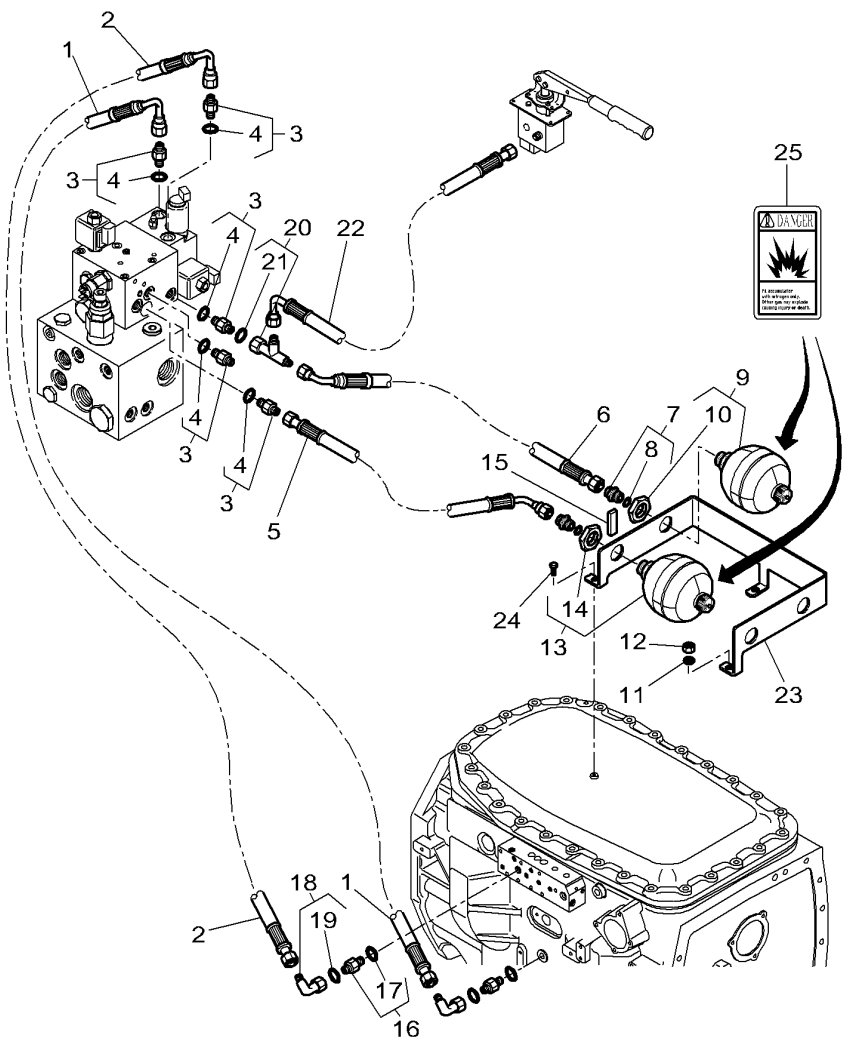

[A] THE APPROPRIATE SAFETY DECALS MUST BE ORDERED AND FITTED TO THIS PART
CETTE PIECE DOIT ETRE IMPERATIVEMENT COMMANDEE AVEC SA DECALCOMANIE DE SECURITE
DIESES TEIL MUSS UNBEDINGT ZUSAMMEN MIT DEM SICHER HEITSHINWEISSCHILD BESTELLT WERDEN
QUESTA PARTE DEVE ESSERE IMPERATIVAMENTO COMANDATA CON LA SUA DECALCOMANIA SICUREZZA
ESTA PARTE DEBE ENCARGARSE IMPERATIVAMENTE CON SU CALCOMANIA DE SEGURIDAD

[B] FEED SUPPLY
ALIMENTATION
ERNAHRUNG
ALIMENTAZIONE
ALIMENTACION

[C] RETURN
RETOUR
RUECKSTROEMUNG
RITORNO
RETORNO

Auxiliary Hydraulics
Hydraulique Auxiliaire
Zusatzhydraulik
Idraulica Ausiliare
Sistema Hidraulico Auxiliar

70-135

Accumulator - R313045 & From R321049
Accumulateur - R313045 & A Partir Du R321049
Akkumulator - R313045 & Ab R321049
Accumulatore - R313045 & Dalla R321049
Acumulador - R313045 & A Partir Del R321049

1-WP27-024-A

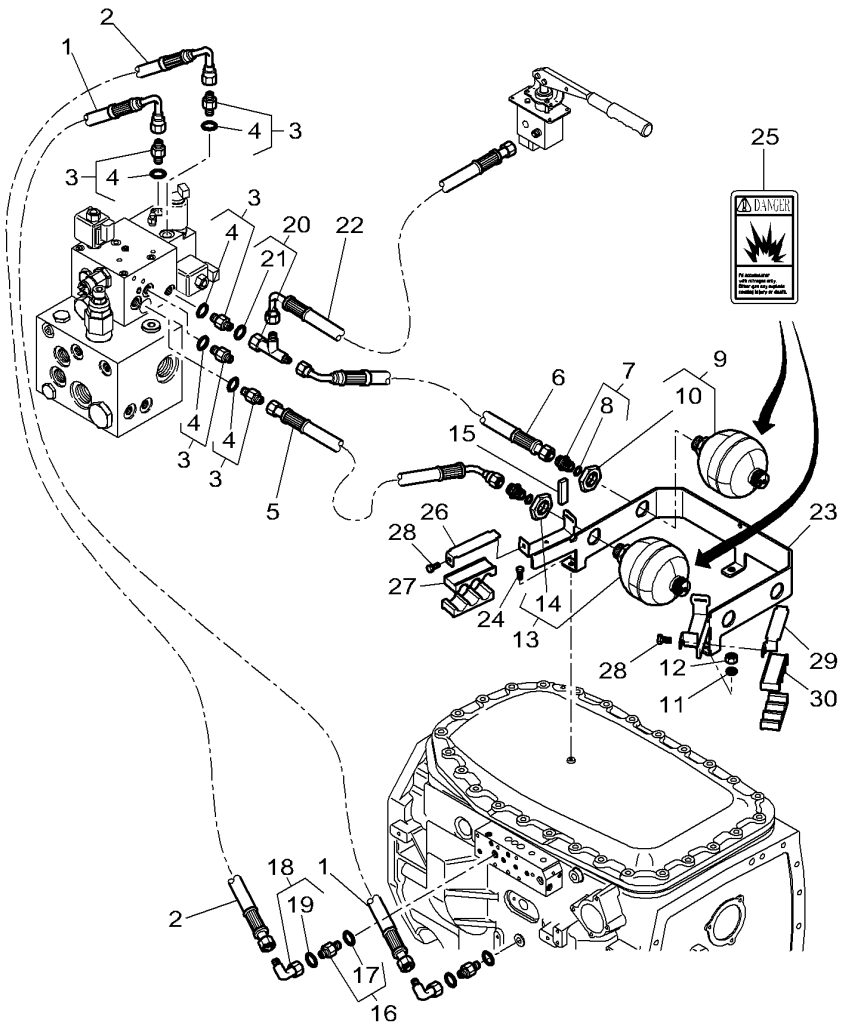

1	4276148M1	[C] 18B ◀▶ 1080MM	**1** HYDR. HOSE	FLEXIBLE TUBOFLEX IDRAUL	HYDR. SCHLAUCH TUBO HIDRAULICO
2	4276147M1	[B] 18B ◀▶ 750MM	**1** HYDR. HOSE	FLEXIBLE TUBOFLEX IDRAUL	HYDR. SCHLAUCH TUBO HIDRAULICO
3	3011038X91	M14X1.5	**5** UNION	RACCORD RACCORDO	VERSCHRAUBUNG RACOR
4	338762X1	3	**1** SEAL	JOINT ETANCHEITE GIUNTO ROTONDO	DICHTRING JUNTA REDONDA
5	4276151M1	◀▶ 550MM	**1** HYDR. HOSE	FLEXIBLE TUBOFLEX IDRAUL	HYDR. SCHLAUCH TUBO HIDRAULICO
6	4276149M1	◀▶ 500MM	**1** HYDR. HOSE	FLEXIBLE TUBOFLEX IDRAUL	HYDR. SCHLAUCH TUBO HIDRAULICO
7	3011550X91	1/2	**2** UNION	RACCORD RACCORDO	VERSCHRAUBUNG RACOR
8	3011154X1	7	**1** GASKET	JOINT GIUNTO PIANO	FLACHDICHTUNG JUNTA PLANA
9	4275558M1	[A] 108B	**1** ACCUMULATOR	ACCUMULATEUR ACCUMULATORE	AKKUMULATOR ACUMULADOR
10	3907430M1	9	**1** NUT	ECROU DADO	MUTTER TUERCA
11	390735X1		**2** FLAT WASHER	RONDELLE PLATE RONDELLE PIANA	UNTERLEGSCHEIBEN ARANDELA PLANA
12	3019862X1	M12	**2** NUT METRIC	ECROU METRIQUE DADO METRICO	MUTTER METRISCH TUERCA METRICO
13	4276645M1	[A] 44B	**1** ACCUMULATOR	ACCUMULATEUR ACCUMULATORE	AKKUMULATOR ACUMULADOR
14	3907430M1	13	**1** NUT	ECROU DADO	MUTTER TUERCA
15	3580695M1	◀▶ 80MM	**1** GASKET	JOINT GIUNTO PIANO	FLACHDICHTUNG JUNTA PLANA
16	3011547X91	M16X1.5	**2** UNION	RACCORD RACCORDO	VERSCHRAUBUNG RACOR
17	338763X1	16	**1** SEAL	JOINT ETANCHEITE GIUNTO ROTONDO	DICHTRING JUNTA REDONDA
18	3011543X91	M16X1.5	**2** UNION	RACCORD RACCORDO	VERSCHRAUBUNG RACOR
19	3011144X1	18	**1** O RING	JOINT TORIQUE GIUNTO DI TENUTA	O-RING JUNTA TOROIDAL
20	3011544X91	M16X1,5	**1** UNION	RACCORD RACCORDO	VERSCHRAUBUNG RACOR
21	3011144X1	20	**1** O RING	JOINT TORIQUE GIUNTO DI TENUTA	O-RING JUNTA TOROIDAL
22	4276150M1	◀▶ 650MM	**1** HYDR. HOSE	FLEXIBLE TUBOFLEX IDRAUL	HYDR. SCHLAUCH TUBO HIDRAULICO
23*	4275571M4		**1** SUPPORT	SUPPORT SOPPORTO	TRAGER SOPORTE
24	339282X1	M10X16	**1** HEX. SOCK. SCREW	VIS TETE HEX VITE PARKER	ZYLINDERSCHRAUBE TORN.CAB.HUECA
25	3777021M3		**1** DECAL	DECALCOMANIE DECALCOMANIA	AUFKLEBER CALCOMANIA

Auxiliary Hydraulics
Hydraulique Auxiliaire
Zusatzhydraulik
Idraulica Ausiliare
Sistema Hidraulico Auxiliar

70-135

Accumulator - R313045 & From R321049
Accumulateur - R313045 & A Partir Du R321049
Akkumulator - R313045 & Ab R321049
Accumulatore - R313045 & Dalla R321049
Acumulador - R313045 & A Partir Del R321049

1-WP27-024-A

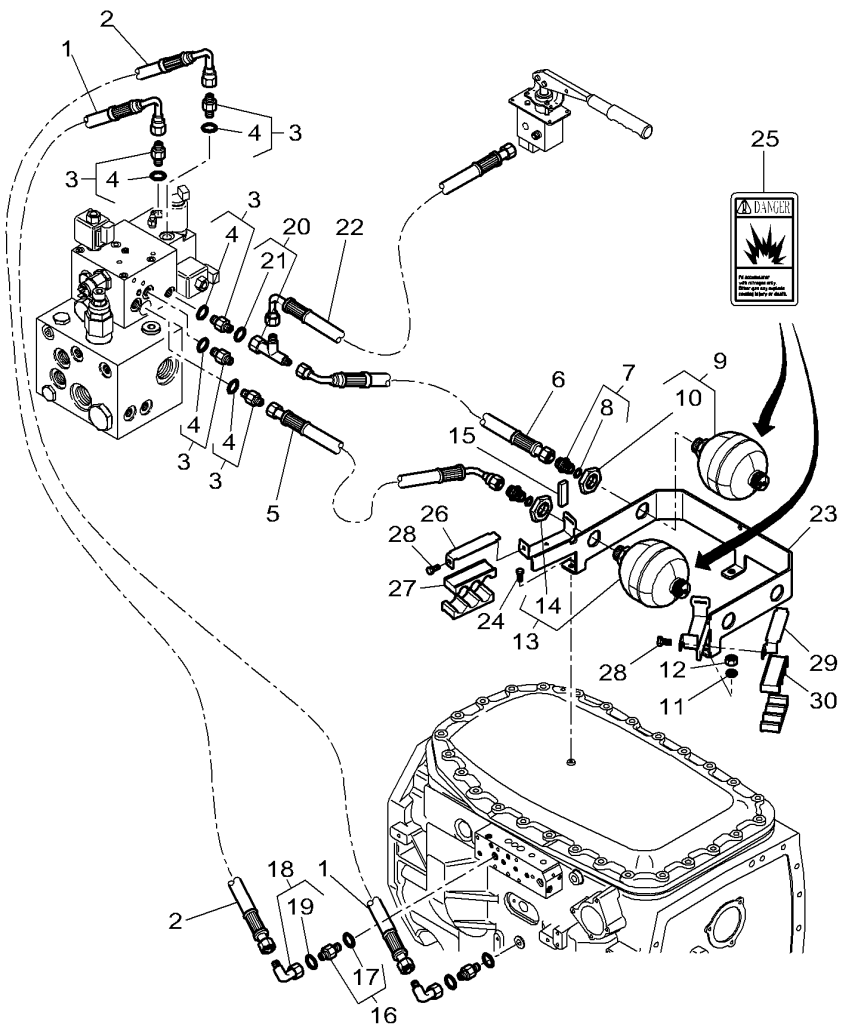

26*	4286573M1		**1**	SUPPORT	SUPPORT SOPPORTO	TRAGER SOPORTE
27*	4286572M1	∅ 28-20-20	**2**	BRIDLE	BRIDE BRIGLIA	LASCHENSPANNBAND BRIDA
28*	339230X1	M6 X 10	**2**	HEX. SOCK. SCREW	VIS TETE HEX VITE PARKER	ZYLINDERSCHRAUBE TORN.CAB.HUECA
29*	4286574M1		**1**	SUPPORT	SUPPORT SOPPORTO	TRAGER SOPORTE
30*	4286571M1	∅ 22-22-20	**2**	BRIDLE	BRIDE BRIGLIA	LASCHENSPANNBAND BRIDA

[A] THE APPROPRIATE SAFETY DECALS MUST BE ORDERED AND FITTED TO THIS PART
CETTE PIECE DOIT ETRE IMPERATIVEMENT COMMANDEE AVEC SA DECALCOMANIE DE SECURITE
DIESES TEIL MUSS UNBEDINGT ZUSAMMEN MIT DEM SICHER HEITSHINWEISSCHILD BESTELLT WERDEN
QUESTA PARTE DEVE ESSERE IMPERATIVAMENTO COMANDATA CON LA SUA DECALCOMANIA SICUREZZA
ESTA PARTE DEBE ENCARGARSE IMPERATIVAMENTE CON SU CALCOMANIA DE SEGURIDAD

[B] FEED SUPPLY
ALIMENTATION
ERNAHRUNG
ALIMENTAZIONE
ALIMENTACION

[C] RETURN
RETOUR
RUECKSTROEMUNG
RITORNO
RETORNO

Auxiliary Hydraulics
Hydraulique Auxiliaire
Zusatzhydraulik
Idraulica Ausiliare
Sistema Hidraulico Auxiliar

70-140

1-WP27-015-A

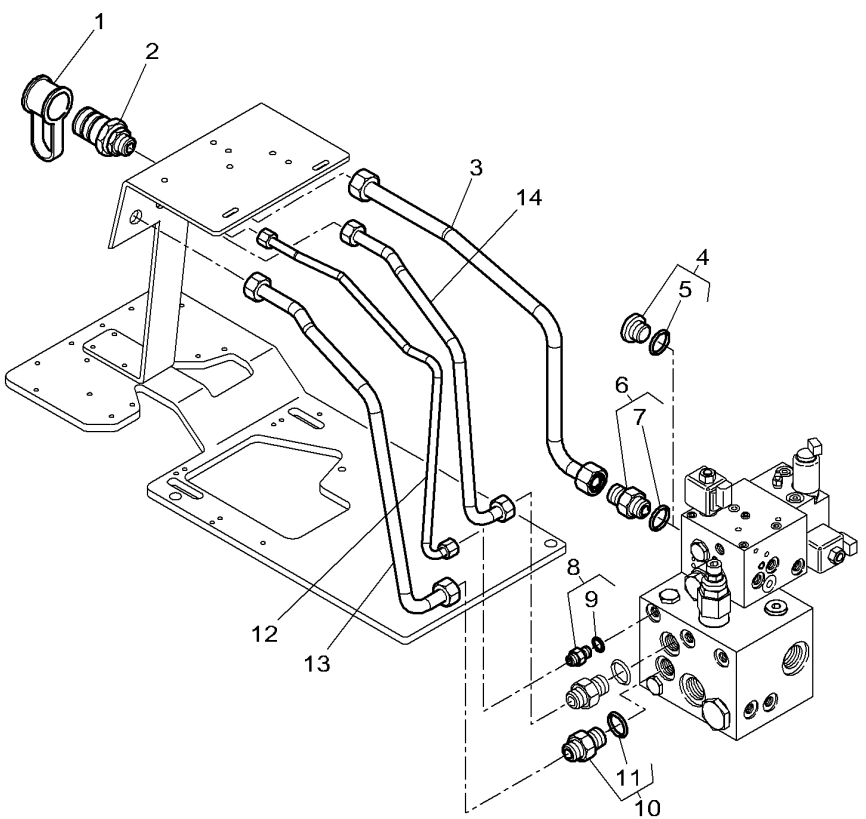

1	4277197M1	[A]	**1**	HELMET	CAPUCHON CASCO	SCHUTZHELM CASCO
2	**3786820M2**	[A]	**1**	FEMALE COUPLER	COUPLEUR FEMELLE GIUNTO FEMMINA	KUPPLST.AUSSEN ACOPLADOR HEMBRA
3	4274984M1	[A]	**1**	TUBE	TUBE TUBO.	ROHR TUBO.
4	3011105X91	[B] M22X1.5	**1**	PLUG	BOUCHON TAPPO	STOPFEN TAPON
5	3011036X1	4	**1**	SEAL	JOINT ETANCHEITE GIUNTO ROTONDO	DICHTRING JUNTA REDONDA
6	3011040X91	[A] M22X1.5	**1**	UNION	RACCORD RACCORDO	VERSCHRAUBUNG RACOR
7	3011036X1	6	**1**	SEAL	JOINT ETANCHEITE GIUNTO ROTONDO	DICHTRING JUNTA REDONDA
8	338795X91	M14X1.5	**1**	UNION	RACCORD RACCORDO	VERSCHRAUBUNG RACOR
9	338762X1	8	**1**	SEAL	JOINT ETANCHEITE GIUNTO ROTONDO	DICHTRING JUNTA REDONDA
10	3011041X91	M22X1.5	**2**	UNION	RACCORD RACCORDO	VERSCHRAUBUNG RACOR
11	3011036X1	10	**1**	SEAL	JOINT ETANCHEITE GIUNTO ROTONDO	DICHTRING JUNTA REDONDA
12	4274983M1		**1**	TUBE	TUBE TUBO.	ROHR TUBO.
13	4274982M1		**1**	TUBE	TUBE TUBO.	ROHR TUBO.
14	4274981M1		**1**	TUBE	TUBE TUBO.	ROHR TUBO.

[A] WITH TRAILOR BRAKING
AVEC FREINAGE DE REMORQUE
MIT ANHAENGERBREMSUNG
CON FRENATURA DI RIMORCHIO
CON TRAILOR BRAKING

[B] WITHOUT TRAILOR BRAKE
SANS FREINAGE DE REMORQUE
OHNE ANHAENGEBREMS
SENZA FRENO RIMORCHIO
SIN FRENO REMOLQUE

Auxiliary Hydraulics
Hydraulique Auxiliaire
Zusatzhydraulik
Idraulica Ausiliare
Sistema Hidraulico Auxiliar

70-145

1-WP27-011-B

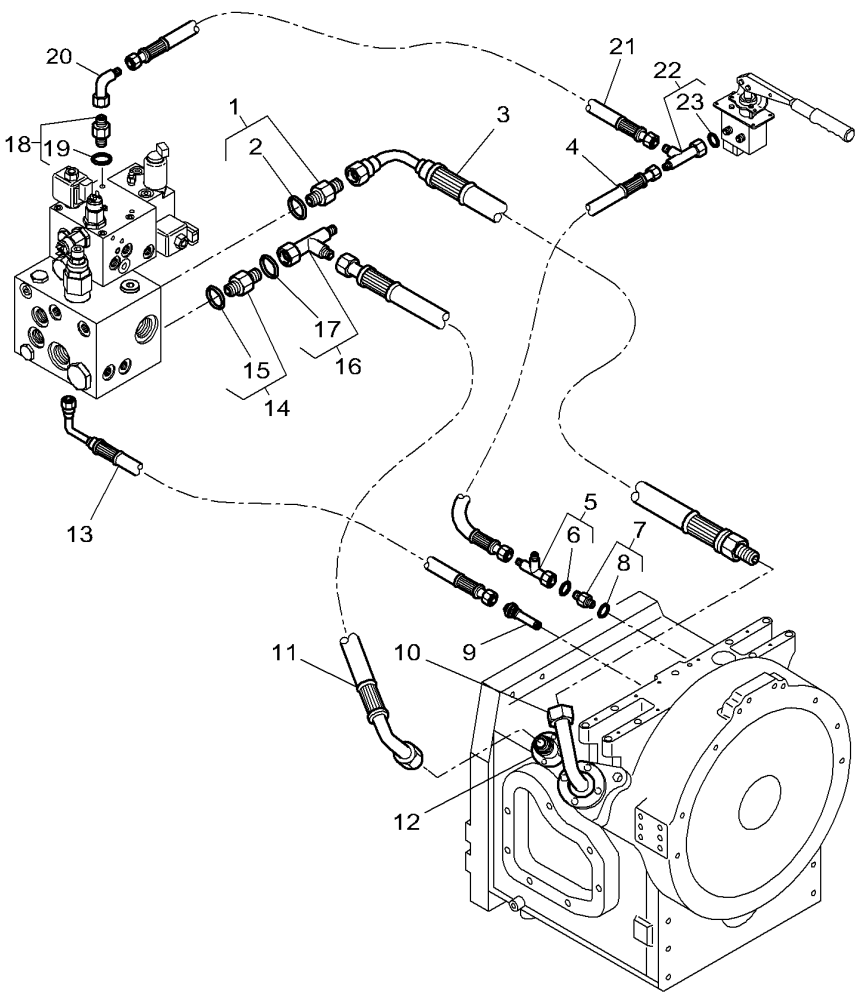

1	3011043X91	M33X2	**1**	UNION	RACCORD RACCORDO	VERSCHRAUBUNG RACOR
2	3011037X1	1	**1**	SEAL	JOINT ETANCHEITE GIUNTO ROTONDO	DICHTRING JUNTA REDONDA
3	4274558M1	◀▶ 1050MM	**1**	HYDR. HOSE	FLEXIBLE TUBOFLEX IDRAUL	HYDR. SCHLAUCH TUBO HIDRAULICO
4	4276154M1	◀▶ 1100MM	**1**	HYDR. HOSE	FLEXIBLE TUBOFLEX IDRAUL	HYDR. SCHLAUCH TUBO HIDRAULICO
5	3011544X91		**1**	UNION	RACCORD RACCORDO	VERSCHRAUBUNG RACOR
6	3011144X1	5	**1**	O RING	JOINT TORIQUE GIUNTO DI TENUTA	O-RING JUNTA TOROIDAL
7	3011554X91	M12X1.5	**1**	UNION	RACCORD RACCORDO	VERSCHRAUBUNG RACOR
8	338761X1	7	**1**	O RING	JOINT TORIQUE GIUNTO DI TENUTA	O-RING JUNTA TOROIDAL
9		👁 70-170 No 30	**1**	UNION	RACCORD RACCORDO	VERSCHRAUBUNG RACOR
10		👁 70-170 No 4	**1**	TUBE	TUBE TUBO.	ROHR TUBO.
11	4276123M1	◀▶ 1000MM	**1**	HYDR. HOSE	FLEXIBLE TUBOFLEX IDRAUL	HYDR. SCHLAUCH TUBO HIDRAULICO
12		👁 70-180 No 18	**1**	UNION	RACCORD RACCORDO	VERSCHRAUBUNG RACOR
13	4276130M1	◀▶ 1100MM	**1**	HYDR. HOSE	FLEXIBLE TUBOFLEX IDRAUL	HYDR. SCHLAUCH TUBO HIDRAULICO
14	3011040X91	M22X1.5	**1**	UNION	RACCORD RACCORDO	VERSCHRAUBUNG RACOR
15	3011036X1	14	**1**	SEAL	JOINT ETANCHEITE GIUNTO ROTONDO	DICHTRING JUNTA REDONDA
16	3011089X91	M22X1.5	**1**	UNION	RACCORD RACCORDO	VERSCHRAUBUNG RACOR
17	3011147X1	16	**1**	O RING	JOINT TORIQUE GIUNTO DI TENUTA	O-RING JUNTA TOROIDAL
18*	338906X91	➡ R285063	**1**	UNION	RACCORD RACCORDO	VERSCHRAUBUNG RACOR
19*	338760X1	18	**1**	O RING	JOINT TORIQUE GIUNTO DI TENUTA	O-RING JUNTA TOROIDAL
20*	3011771X91	➡ R285063	**1**	UNION	RACCORD RACCORDO	VERSCHRAUBUNG RACOR
21*	4289857M1	➡ R285063 ◀▶ 620MM	**1**	HYDR. HOSE	FLEXIBLE TUBOFLEX IDRAUL	HYDR. SCHLAUCH TUBO HIDRAULICO
22*	3011544X91	➡ R285063	**1**	UNION	RACCORD RACCORDO	VERSCHRAUBUNG RACOR
23*	3011144X1	22	**1**	O RING	JOINT TORIQUE GIUNTO DI TENUTA	O-RING JUNTA TOROIDAL

Auxiliary Hydraulics
Hydraulique Auxiliaire
Zusatzhydraulik
Idraulica Ausiliare
Sistema Hidraulico Auxiliar

70-150

➡ **R285062**

1-WP27-012-A

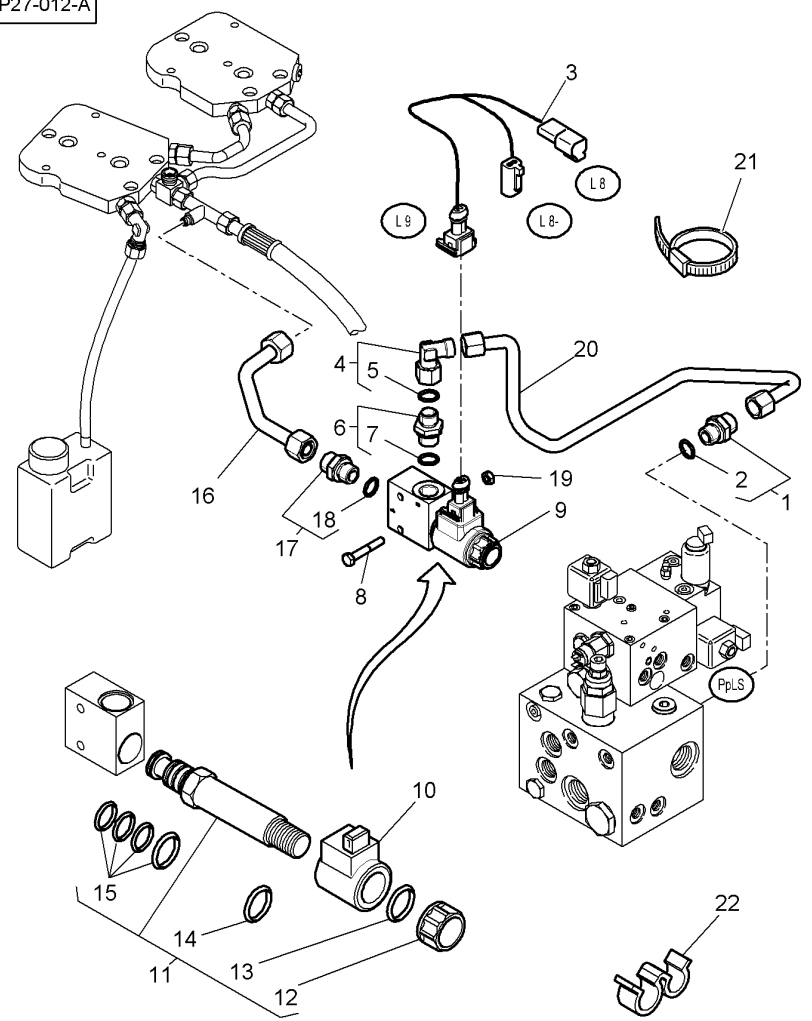

1	338795X91		**1**	UNION	RACCORD RACCORDO	VERSCHRAUBUNG RACOR
2	338762X1	1	**1**	SEAL	JOINT ETANCHEITE GIUNTO ROTONDO	DICHTRING JUNTA REDONDA
3	4281518M1		**1**	HARNESS	FAISCEAU FASCIOCAVI	KABELBAUM MAZO CABLES
4	3011083X91		**1**	UNION	RACCORD RACCORDO	VERSCHRAUBUNG RACOR
5	3011145X1	4	**1**	O RING	JOINT TORIQUE GIUNTO DI TENUTA	O-RING JUNTA TOROIDAL
6	3011296X91		**1**	UNION	RACCORD RACCORDO	VERSCHRAUBUNG RACOR
7	338923X1	6	**1**	GASKET	JOINT GIUNTO PIANO	FLACHDICHTUNG JUNTA PLANA
8	339229X1	M6 X 40	**2**	HEX. SOCK. SCREW	VIS TETE HEX VITE PARKER	ZYLINDERSCHRAUBE TORN.CAB.HUECA
9	4280546M1		**1**	ELECTROVALVE	ELECTROVANNE ELETTROVALVOLA	ELECTRON.VENTIL ELECTROVALVULA
10	3907591M1	9	**1**	COIL	BOBINE BOBINA	SPULE BOBINA
11	3907588M1	9	**1**	PRESSURE VALVE	VALVE VALVOLA PRESSION	DRUCKVENTIL VALVULA PRESION
12	3907590M1	11	**1**	PLUG	BOUCHON TAPPO	STOPFEN TAPON
13	**365392X1**	11	**1**	O RING	JOINT TORIQUE GIUNTO DI TENUTA	O-RING JUNTA TOROIDAL
14	3907589M1	11	**1**	O RING	JOINT TORIQUE GIUNTO DI TENUTA	O-RING JUNTA TOROIDAL
15	3907587M91	11	**1**	KIT, JOINT	JEU JOINTS KIT GIUNTO	DICHTUNGSSATZ JUEGO JUNTAS
16	4281368M1		**1**	TUBE	TUBE TUBO.	ROHR TUBO.
17	3011223X91		**1**	UNION	RACCORD RACCORDO	VERSCHRAUBUNG RACOR
18	338923X1	17	**1**	GASKET	JOINT GIUNTO PIANO	FLACHDICHTUNG JUNTA PLANA
19	1442021X1		**2**	NUT METRIC	ECROU METRIQUE DADO METRICO	MUTTER METRISCH TUERCA METRICO
20	4281367M1		**1**	TUBE	TUBE TUBO.	ROHR TUBO.
21	3619622M1		**X**	CABLE TIE	ATTACHE CABLE FASCETTA CAVI	KABELBINDER APRIETACABLES
22	4281854M1		**2**	TIE	ATTACHE TRAVERSA ATTACCO	ANBINDUNG BARRA DE ENLACE

Hydraulique Manifold
Repartiteur Hydraulique
Hydraulik Verteilerdose
Ripartitore Di Idraulica
Valvula Distribuidora De Hidraulica

70-155

1-WP25-005-C

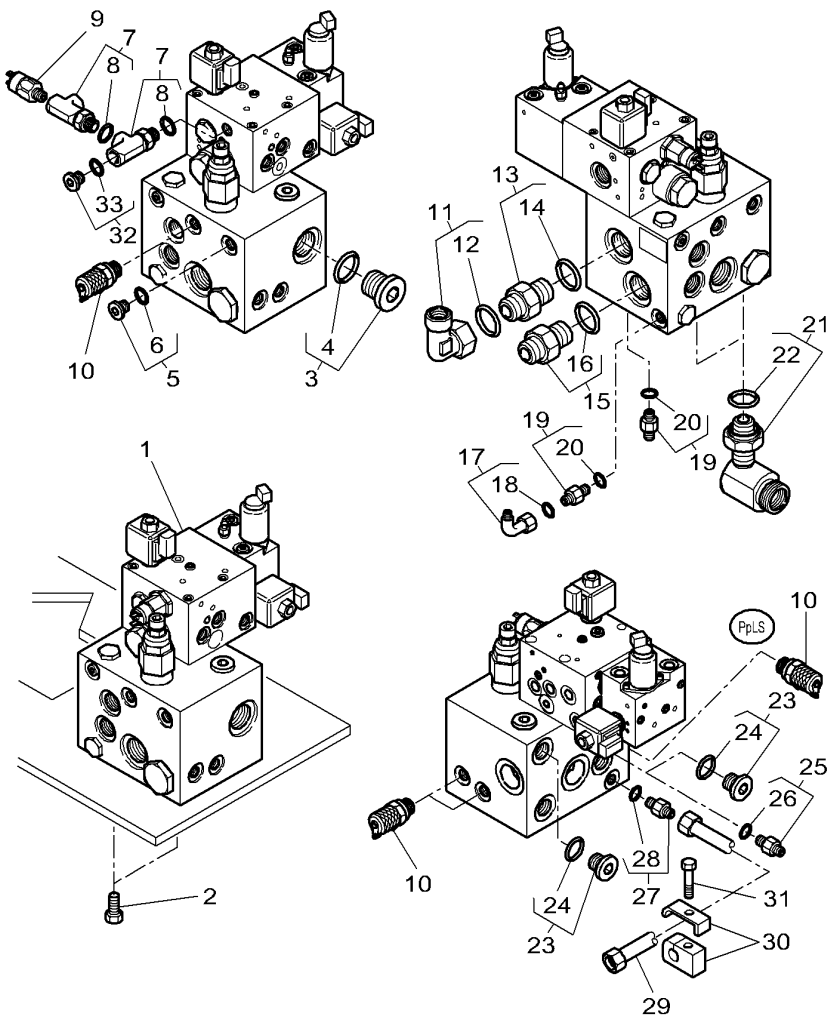

1	4274585M92	70-160 No 1 R285062	**1**	PRESSURE VALVE	VALVE VALVOLA PRESSION	DRUCKVENTIL VALVULA PRESION
1*	4287297M92	70-165 No 1 R285063	**1**	VALVE BLOCK	BLOC VALVE BLOCCO VALVOLE	VENTILBLOCK BLOQUE VALVULAS
2	3009505X1	M12X25	**2**	HEX. SOCK. SCREW	VIS TETE HEX VITE PARKER	ZYLINDERSCHRAUBE TORN.CAB.HUECA
3	3011107X91	M33X2	**1**	PLUG	BOUCHON TAPPO	STOPFEN TAPON
4	3011037X1	3	**1**	SEAL	JOINT ETANCHEITE GIUNTO ROTONDO	DICHTRING JUNTA REDONDA
5	3011099X91	M14X1.5	**1**	PLUG	BOUCHON TAPPO	STOPFEN TAPON
6	338762X1	5	**1**	SEAL	JOINT ETANCHEITE GIUNTO ROTONDO	DICHTRING JUNTA REDONDA
7*	4278267M1	R285062	**2**	UNION	RACCORD RACCORDO	VERSCHRAUBUNG RACOR
8*	195562M1	7 R285062	**2**	O RING	JOINT TORIQUE GIUNTO DI TENUTA	O-RING JUNTA TOROIDAL
9	**4278368M1**	105 B R285062	**1**	PRESSURE SWITCH	MANO CONTACT PRESSOSTATO	DRUCKSCHALTER INTERRUP PRESION
10	**3785665M1**	R285062	**3**	PRESSURE INTAKE	PRISE PRESSION PRESA PRESSIONE	ANSAUGDRUCK ENTRADA PRESION
10*	**3785665M1**	R285063	**4**	PRESSURE INTAKE	PRISE PRESSION PRESA PRESSIONE	ANSAUGDRUCK ENTRADA PRESION
11	3011088X91	M36X2	**1**	ELBOW NIPPLE	RACCORD COUDE NIPPLO GOMITO	WINKELSTUTZEN CODO DE UNION
12	3011150X1	11	**1**	O RING	JOINT TORIQUE GIUNTO DI TENUTA	O-RING JUNTA TOROIDAL
13	3011043X91	M33X2	**1**	UNION	RACCORD RACCORDO	VERSCHRAUBUNG RACOR
14	3011037X1	13	**1**	SEAL	JOINT ETANCHEITE GIUNTO ROTONDO	DICHTRING JUNTA REDONDA
15	3011042X91	M33X2	**1**	UNION	RACCORD RACCORDO	VERSCHRAUBUNG RACOR
16	3011037X1	15	**1**	SEAL	JOINT ETANCHEITE GIUNTO ROTONDO	DICHTRING JUNTA REDONDA
17	3011543X91	M16X1.5	**1**	UNION	RACCORD RACCORDO	VERSCHRAUBUNG RACOR
18	3011144X1	17	**1**	O RING	JOINT TORIQUE GIUNTO DI TENUTA	O-RING JUNTA TOROIDAL
19	3011038X91	M14X1.5	**2**	UNION	RACCORD RACCORDO	VERSCHRAUBUNG RACOR
20	338762X1	19	**1**	SEAL	JOINT ETANCHEITE GIUNTO ROTONDO	DICHTRING JUNTA REDONDA
21	4277200M2	M22X1.5	**2**	UNION	RACCORD RACCORDO	VERSCHRAUBUNG RACOR
22	1442477X1	21	**1**	GASKET	JOINT GIUNTO PIANO	FLACHDICHTUNG JUNTA PLANA
23	3011105X91	M22X1.5	**1**	PLUG	BOUCHON TAPPO	STOPFEN TAPON
24	3011036X1	23	**1**	SEAL	JOINT ETANCHEITE GIUNTO ROTONDO	DICHTRING JUNTA REDONDA

Hydraulique Manifold
Repartiteur Hydraulique
Hydraulik Verteilerdose
Ripartitore Di Idraulica
Valvula Distribuidora De Hidraulica

70-155

1-WP25-005-C

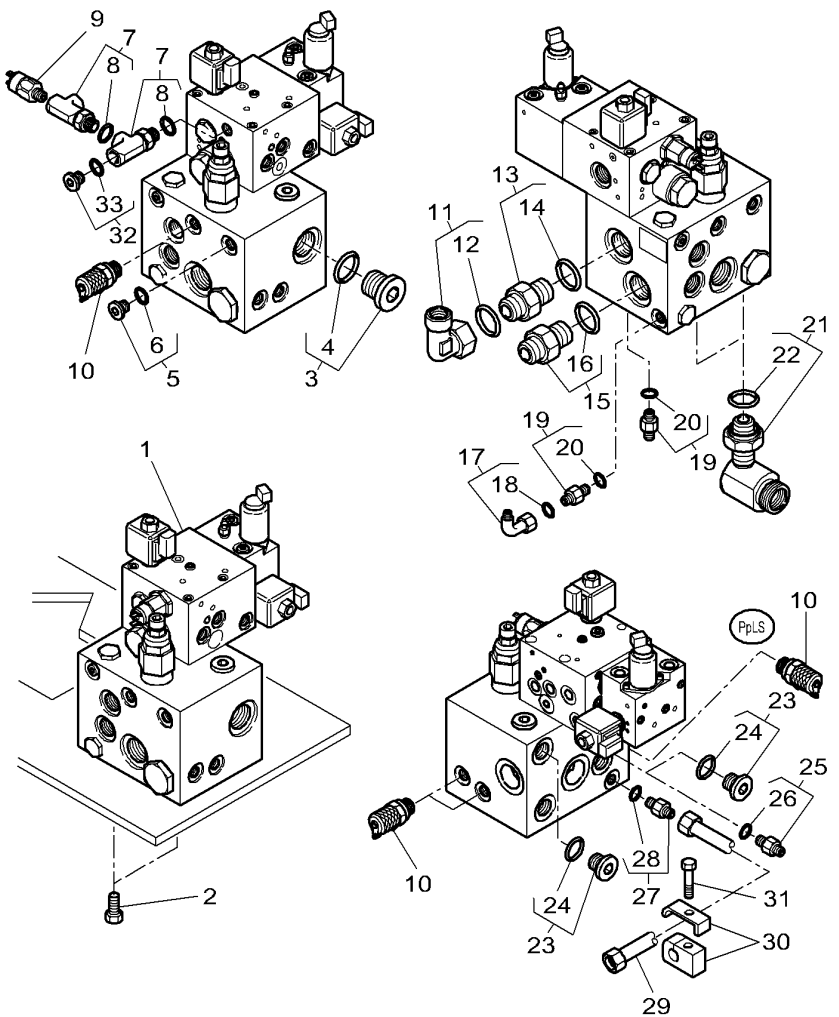

25	3011039X91	[A] M22X1.5	**1**	UNION	RACCORD RACCORDO	VERSCHRAUBUNG RACOR
26	3011036X1	25	**1**	SEAL	JOINT ETANCHEITE GIUNTO ROTONDO	DICHTRING JUNTA REDONDA
27	338795X91		**1**	UNION	RACCORD RACCORDO	VERSCHRAUBUNG RACOR
28	338762X1	27	**1**	SEAL	JOINT ETANCHEITE GIUNTO ROTONDO	DICHTRING JUNTA REDONDA
29	4279911M1	[A]	**1**	TUBE	TUBE TUBO.	ROHR TUBO.
30	3781906M1	[A]	**1**	BRIDLE	BRIDE BRIGLIA	LASCHENSPANNBAND BRIDA
31	339337X1	[A]	**1**	HEX. SOCK. SCREW	VIS TETE HEX VITE PARKER	ZYLINDERSCHRAUBE TORN.CAB.HUECA
32*	3011772X91	➡ R285062	**1**	PLUG	BOUCHON TAPPO	STOPFEN TAPON
33*	338762X1	32 ➡ R285062	**1**	SEAL	JOINT ETANCHEITE GIUNTO ROTONDO	DICHTRING JUNTA REDONDA

[A] WITH FRONT AXLE SUSPENDED
AVEC PONT AVANT SUSPENDU
MIT HAENGE VORDERASCHSE
CON ASSALE ANTERIORE SOSPESO
CON EJE DELANTERO SUSPENDIDO

Hydraulique Manifold
Repartiteur Hydraulique
Hydraulik Verteilerdose
Ripartitore Di Idraulica
Valvula Distribuidora De Hidraulica

70-160

R285062

PLANCHES EN COURS D'ILLUSTRATION

1	4274585M92		**1**	PRESSURE VALVE	VALVE VALVOLA PRESSION	DRUCKVENTIL VALVULA PRESION
2*	3907659M1	1	**1**	BRAKE VALVE	VALVE DE FREIN VALVOLA FRENO	BREMSVENTIL VALVULA DE FRENO
3*	3907619M91	2	**1**	ELECTROVALVE	ELECTROVANNE ELETTROVALVOLA	ELECTRON.VENTIL ELECTROVALVULA
4*	3907620M91	2	**1**	ELECTROVALVE	ELECTROVANNE ELETTROVALVOLA	ELECTRON.VENTIL ELECTROVALVULA
5*	**4278368M1**	2	**1**	PRESSURE SWITCH	MANO CONTACT PRESSOSTATO	DRUCKSCHALTER INTERRUP PRESION
6	3907337M91	1 210 Bar	**1**	VALVE	SOUPAPE VALVOLA	VENTIL VALVULA
7	3907487M91		**1**	KIT,JOINT/GASKET	JEU DE JOINTS KIT GUARN/GIUNTO	DICHTUNGS-SATZ JGO.JUNTAS/EMPAQ
8	3907336M91	1 10 Bar	**1**	NON RETURN VALVE	CLAPET VALVOLA NO RITOR	RUECKSCHLAGVENT. VALV.SIN RETORNO
9	3907618M91	1	**1**	SELECTOR	SELECTEUR SELETTORE	SELEKTOR SELECTOR
10	3907617M91		**1**	KIT, JOINT	JEU JOINTS KIT GIUNTO	DICHTUNGSSATZ JUEGO JUNTAS
11	1442692X1	1 M6 X 25	**X**	BOLT	BOULON BULLONE	BOLZEN BULON
11	3010185X1	1 M8 X 25	**X**	SCREW	VIS VITE	SCHRAUBE TORNILLO
12*	3907826M91	2	**1**	KIT, JOINT	JEU JOINTS KIT GIUNTO	DICHTUNGSSATZ JUEGO JUNTAS
13*	3907621M91	2	**1**	RESTRICTOR	LIMITEUR LIMITATORE	SPARDUESE LIMITADOR
14*	3907908M91	15	**1**	KIT,JOINT/GASKET	JEU DE JOINTS KIT GUARN/GIUNTO	DICHTUNGS-SATZ JGO.JUNTAS/EMPAQ
15*	3907825M91		**1**	KIT, JOINT	JEU JOINTS KIT GIUNTO	DICHTUNGSSATZ JUEGO JUNTAS
16	3907703M1	1	**1**	BUSH	BAGUE BOCCOLA	RING CASQUILLO
17	3009280X1	1 CHC M6 X 12	**1**	SCREW	VIS VITE	SCHRAUBE TORNILLO

Hydraulique Manifold
Repartiteur Hydraulique
Hydraulik Verteilerdose
Ripartitore Di Idraulica
Valvula Distribuidora De Hidraulica

70-165

➡ **R285063**

1-WP25-007-B

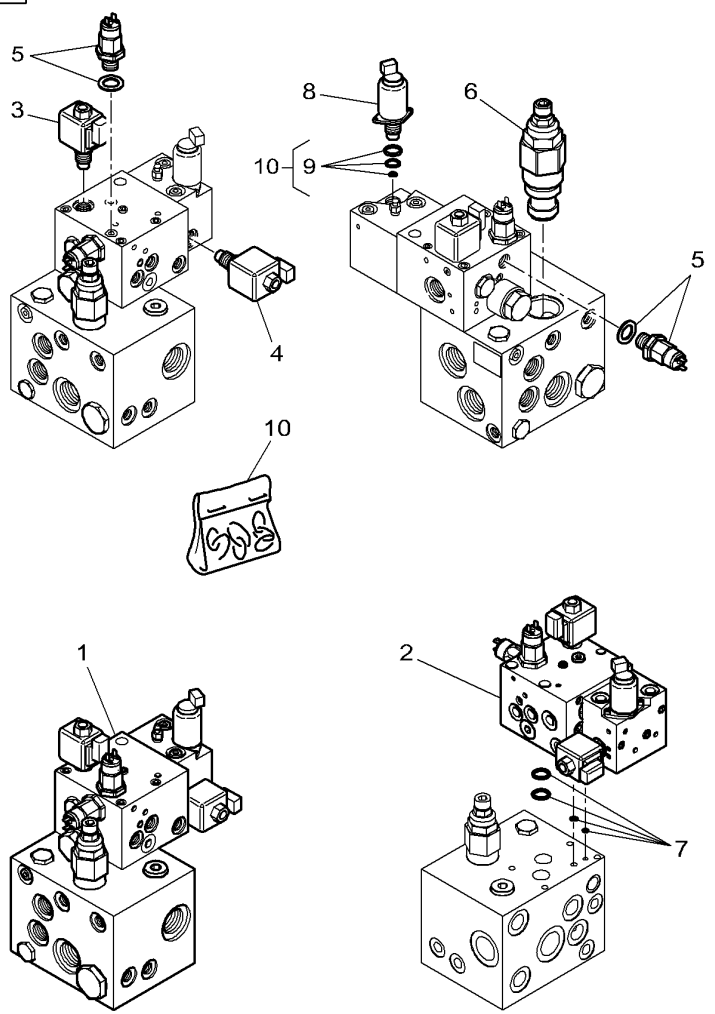

1*	4287297M92		**1**	VALVE BLOCK	BLOC VALVE BLOCCO VALVOLE BLOQUE VALVULAS
2*	3907910M91	1	**1**	BRAKE VALVE	VALVE DE FREIN VALVOLA FRENO BREMSVENTIL VALVULA DE FRENO
3*	3907882M91	2	**1**	ELECTROVALVE	ELECTROVANNE ELETTROVALVOLA ELECTRON.VENTIL ELECTROVALVULA
4*	3907620M91	2	**1**	ELECTROVALVE	ELECTROVANNE ELETTROVALVOLA ELECTRON.VENTIL ELECTROVALVULA
5*	**4278368M1**	2	**2**	PRESSURE SWITCH	MANO CONTACT PRESSOSTATO DRUCKSCHALTER INTERRUP PRESION
6*	3907337M91	2 210 Bar	**1**	VALVE	SOUPAPE VALVOLA VENTIL VALVULA
7*	3907826M91	2	**1**	KIT, JOINT	JEU JOINTS KIT GIUNTO DICHTUNGSSATZ JUEGO JUNTAS
8*	3907621M91	2	**1**	RESTRICTOR	LIMITEUR LIMITATORE SPARDUESE LIMITADOR
9*	3907908M91	10	**1**	KIT,JOINT/GASKET	JEU DE JOINTS KIT GUARN/GIUNTO DICHTUNGS-SATZ JGO.JUNTAS/EMPAQ
10*	3907825M91		**1**	KIT, JOINT	JEU JOINTS KIT GIUNTO DICHTUNGSSATZ JUEGO JUNTAS

Auxiliary Hydraulics
Hydraulique Auxiliaire
Zusatzhydraulik
Idraulica Ausiliare
Sistema Hidraulico Auxiliar

70-170

Pump Filter Suction
Aspiration Filtre Pompe
Ansaugung Pumpenfilter
Aspirazione Filtro Pompa
Aspiracion Filtro Bomba

1-WP27-009-A

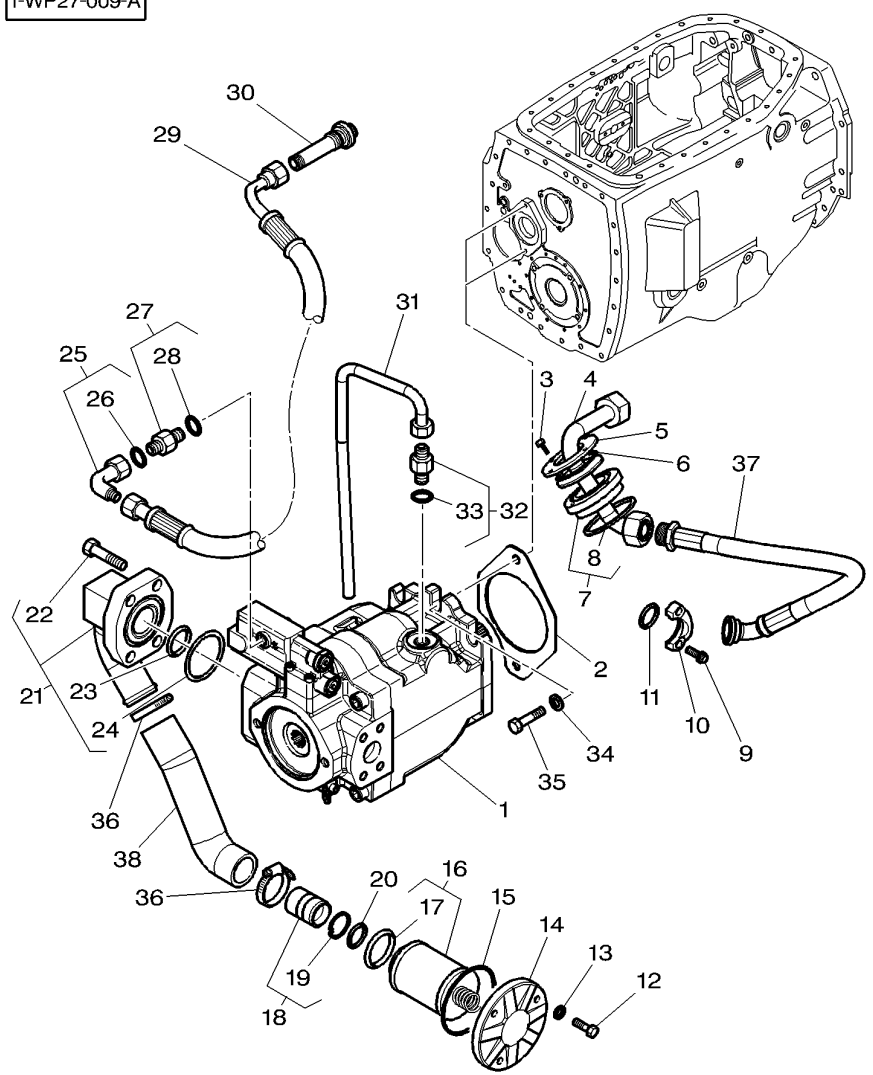

1	4272110M1	👁	70-175 No 1	**1**	HYDRAULIC PUMP	POMPEHYDRAULIQUE POMPA IDRAULICA	HYDROPUMPE BOMBA HIDRAULICA
2	816940010010			**1**	SUMP GASKET	JOINT CARTER HUI SUMP GASKET	FORMDICHTUNG JUNTA DE PERFIL
3	339560X1		M6X16	**4**	HEX. SOCK. SCREW	VIS TETE HEX VITE PARKER	ZYLINDERSCHRAUBE TORN.CAB.HUECA
4	4274546M91			**1**	TUBE	TUBE TUBO.	ROHR TUBO.
5	4275574M1			**1**	WASHER	RONDELLE RONDELLA	SCHEIBE ARANDELA
6	4274560M1	∅	69,45X3,53	**1**	O RING	JOINT TORIQUE GIUNTO DI TENUTA	O-RING JUNTA TOROIDAL
7	4275572M91			**1**	PLUG	BOUCHON TAPPO	STOPFEN TAPON
8	4276652M1	7		**1**	JOINT.	JOINT PLAT GIUNTO	DICHTUNG JUNTA
9	367788X1		3/8	**4**	SCREW	VIS VITE	SCHRAUBE TORNILLO
10	3787910M1			**2**	BRIDLE	BRIDE BRIGLIA	LASCHENSPANNBAND BRIDA
11	359305X1			**1**	O RING	JOINT TORIQUE GIUNTO DI TENUTA	O-RING JUNTA TOROIDAL
12	339010X1		M8X40	**3**	HEX. SOCK. SCREW	VIS TETE HEX VITE PARKER	ZYLINDERSCHRAUBE TORN.CAB.HUECA
13	339374X1			**3**	LOCK WASHER	RONDELLE FREIN RONDELLA ARRESTO	SICHERUNGSRING ARANDELA SEGURID
14	716100490110			**1**	COVER	COUVERCLE COPERCHIO	ABDECKUNG. CUBIERTA
15	X548989200000			**1**	O RING	JOINT TORIQUE GIUNTO DI TENUTA	O-RING JUNTA TOROIDAL
16	**G916951010010**			**1**	SUCTION FILTER	FILTRE ASPIRATIO SUCTION FILTER	SAUGFILTER FILTRO D'SUCCION
17	X548922800000	16		**1**	O RING	JOINT TORIQUE GIUNTO DI TENUTA	O-RING JUNTA TOROIDAL
18	G916951010020			**1**	INTAKE STACK	PRISE D AIR RACCORDO ASPIRAZ	ANSAUGSTUTZEN PASAJE ENTRADA
19	X533212000000	18		**1**	SNAPRING	SEGMENT ARRET ANELLO SIEGER	SPRENGRING ANILLA RETENCION
20	X548907866000			**1**	O RING	JOINT TORIQUE GIUNTO DI TENUTA	O-RING JUNTA TOROIDAL
21	4274545M1			**1**	BRIDLE	BRIDE BRIGLIA	LASCHENSPANNBAND BRIDA
22	358176X1	21		**4**	SCREW	VIS VITE	SCHRAUBE TORNILLO
23	3907461M1	21	∅ 37,69X3,53	**1**	O RING	JOINT TORIQUE GIUNTO DI TENUTA	O-RING JUNTA TOROIDAL
24	3907462M1	21	∅ 56,74X3,53	**1**	O RING	JOINT TORIQUE GIUNTO DI TENUTA	O-RING JUNTA TOROIDAL
25	3011082X91			**1**	ELBOW	COUDE GOMITO	WINKELSTUECK CODO
26	3011144X1	25		**1**	O RING	JOINT TORIQUE GIUNTO DI TENUTA	O-RING JUNTA TOROIDAL

Auxiliary Hydraulics
Hydraulique Auxiliaire
Zusatzhydraulik
Idraulica Ausiliare
Sistema Hidraulico Auxiliar

70-170

Pump Filter Suction
Aspiration Filtre Pompe
Ansaugung Pumpenfilter
Aspirazione Filtro Pompa
Aspiracion Filtro Bomba

1-WP27-009-A

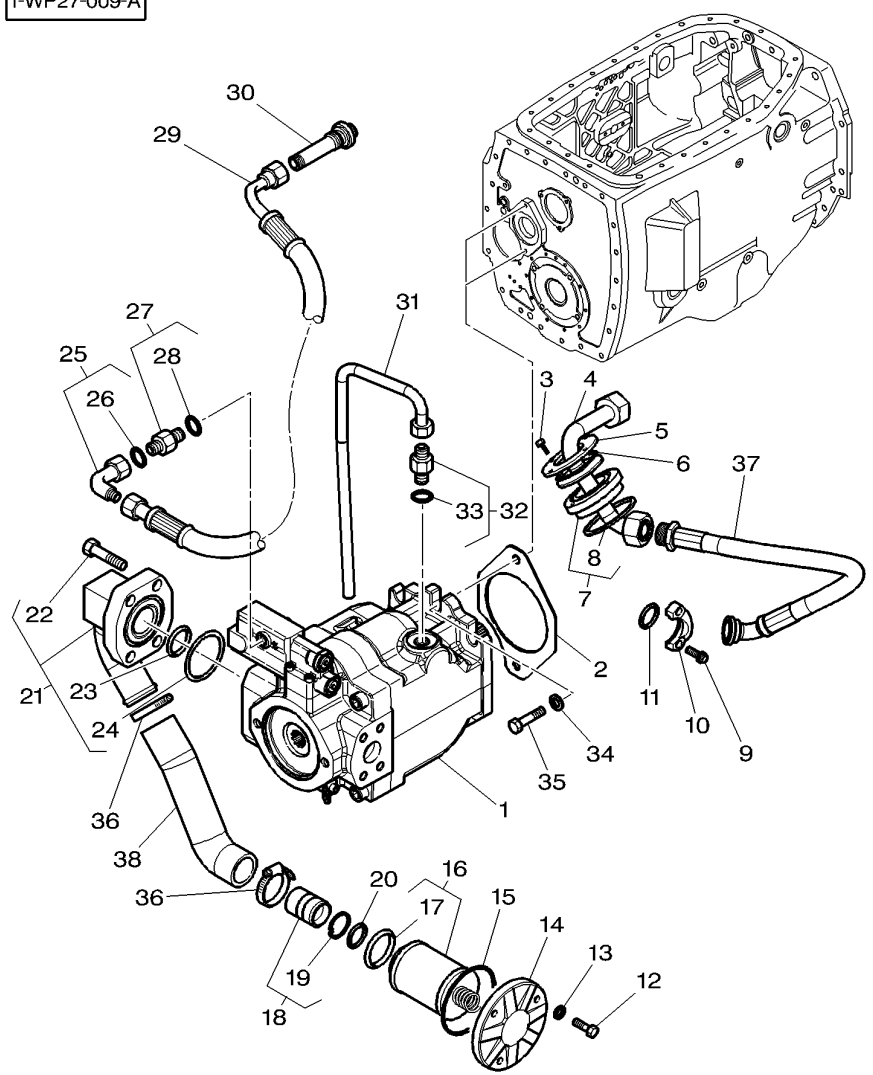

27	3011314X91		**1**	UNION	RACCORD RACCORDO	VERSCHRAUBUNG RACOR
28	70921883	27	**1**	O RING	JOINT TORIQUE GIUNTO DI TENUTA	O-RING JUNTA TOROIDAL
29	4276128M1	◀▶ 450MM	**1**	HYDR. HOSE	FLEXIBLE TUBOFLEX IDRAUL	HYDR. SCHLAUCH TUBO HIDRAULICO
30	4275576M1	M18X1.5	**1**	UNION	RACCORD RACCORDO	VERSCHRAUBUNG RACOR
31	4276668M1		**1**	TUBE	TUBE TUBO.	ROHR TUBO.
32	3011059X91	7/8	**1**	UNION	RACCORD RACCORDO	VERSCHRAUBUNG RACOR
33	70921886	32	**1**	O RING	JOINT TORIQUE GIUNTO DI TENUTA	O-RING JUNTA TOROIDAL
34	338686X1		**2**	WASHER	RONDELLE RONDELLA	SCHEIBE ARANDELA
35	3019863X1	M12X35	**2**	HEX. SOCK. SCREW	VIS TETE HEX VITE PARKER	ZYLINDERSCHRAUBE TORN.CAB.HUECA
36*	338617X1	∅ 40-60 ▬▶ R048008	**2**	HOSE CLIP	COLLIER DURITE COLLARE DI TUBO	SCHLAUCHBINDER ABRAZADERA TUBO
36*	338617X1	∅ 40-60 ▬▶ R048009	**1**	HOSE CLIP	COLLIER DURITE COLLARE DI TUBO	SCHLAUCHBINDER ABRAZADERA TUBO
36*	3010154X1	∅ 50-70 ▬▶ R048009	**1**	CLAMP	COLLIER FASCETTA	HALTESCHELLE ABRAZADERA
37	4276129M1	◀▶ 700MM	**1**	HYDR. HOSE	FLEXIBLE TUBOFLEX IDRAUL	HYDR. SCHLAUCH TUBO HIDRAULICO
38*	4275559M2		**1**	HOSE	DURITE TUBO FLESSIBILE	SCHLAUCH TUBO DE GOMA

Hydraulic Pump
Pompe Hydraulique
Hydraulikpumpe
Pompa Idraulica
Bomba Hidraulica

70-175

1-WP32-004-A

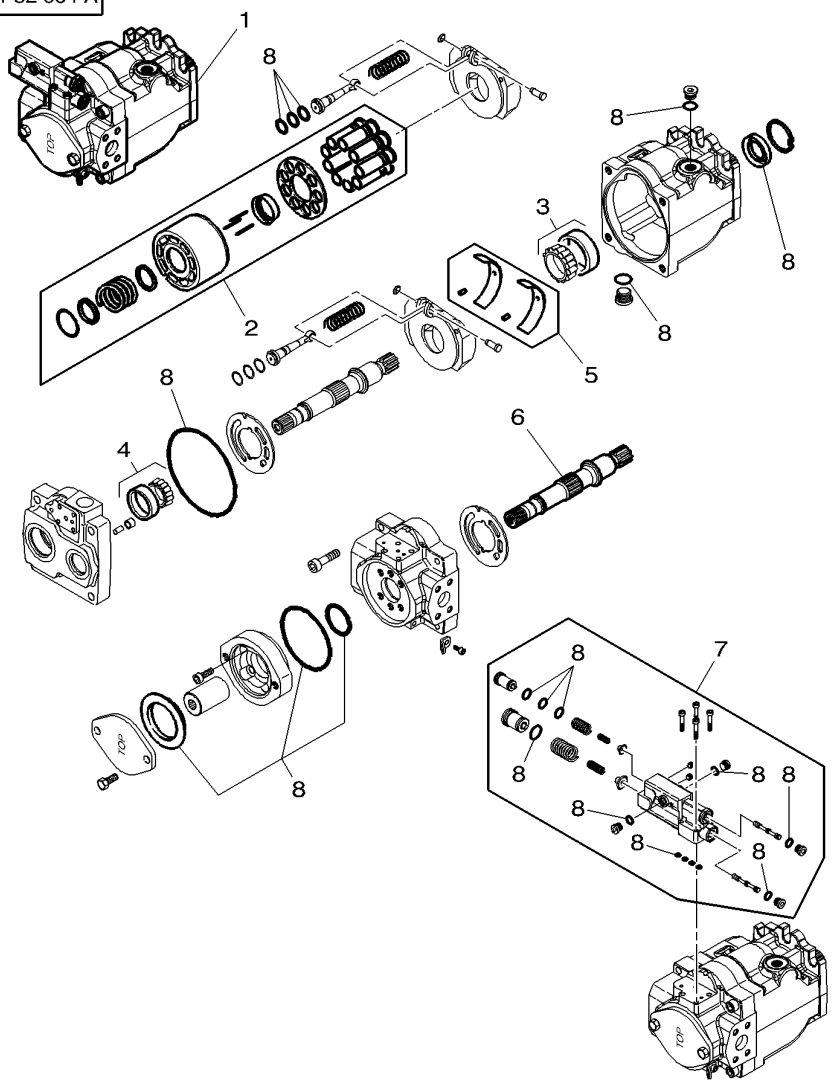

1	4272110M1			**1**	HYDRAULIC PUMP	POMPEHYDRAULIQUE POMPA IDRAULICA	HYDROPUMPE BOMBA HIDRAULICA
2	3907469M91	1		**1**	KIT, PISTON	JEU PISTON KIT PISTONE	KOLBENSATZ JUEGO DE PISTON
3	3907466M91	1		**1**	BEARING ASSY	ROULEMENT CUSCINETTO COMPL	RADIALLAGER RODAMIENTO RAD
4	3907467M91	1		**1**	BEARING ASSY	ROULEMENT CUSCINETTO COMPL	RADIALLAGER RODAMIENTO RAD
5	3907468M91	1		**1**	PARTS PACK	JEU PIECES PACCO RICAMBI	SATZ TEILE PAQUETE PIEZAS
6	3907465M1	1	14	**1**	SHAFT	ARBRE ALBERO	WELLE ARBOL
7	3907464M91	1		**1**	DRIVE	COMMANDE PRESA DI MOTO	ANTRIEB TRASMISION
8	3907463M91	1		**1**	KIT, JOINT	JEU JOINTS KIT GIUNTO	DICHTUNGSSATZ JUEGO JUNTAS

Auxiliary Hydraulics
Hydraulique Auxiliaire
Zusatzhydraulik
Idraulica Ausiliare
Sistema Hidraulico Auxiliar

70-180

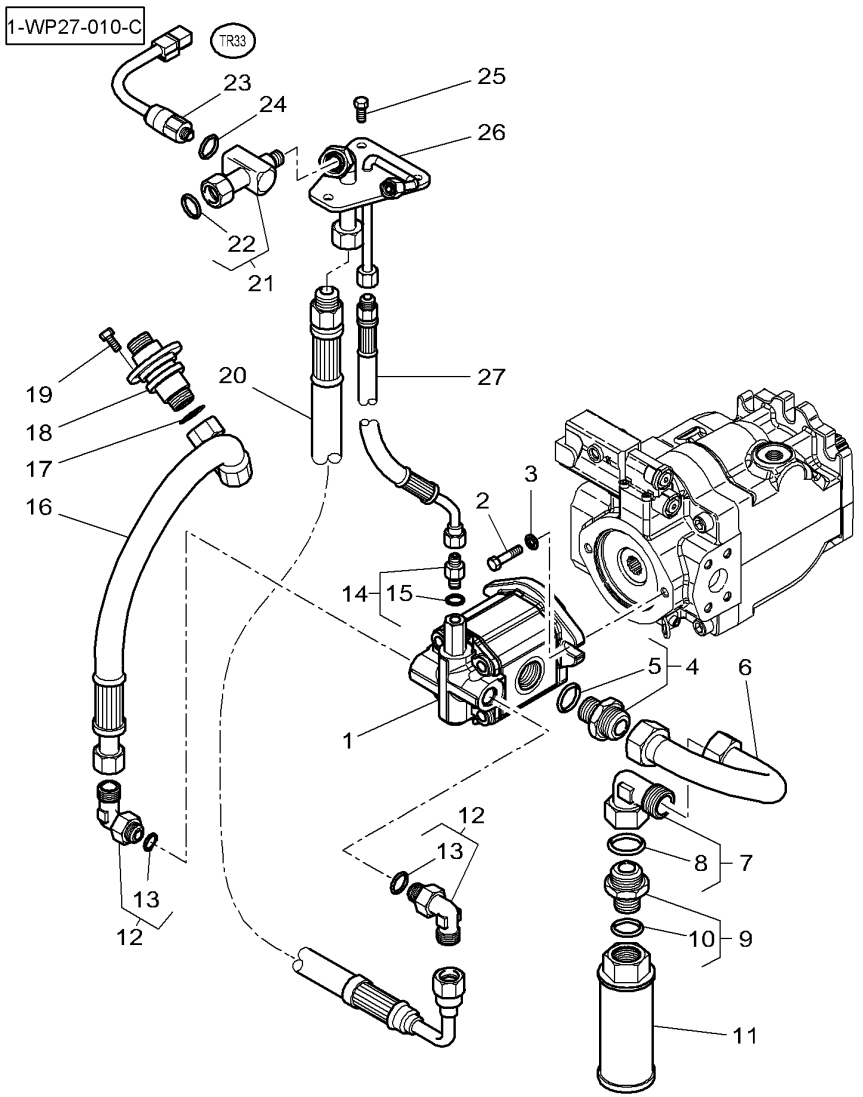

1*	4272111M2		**1**	GEAR PUMP	POMPE ENGRENAGES INGRANAGGIO POM.	ZAHNRADPUMPE BOMBA ENGRANAJES
2	357740X1	3/8	**2**	SCREW UNC	VIS UNC VITE UNC	SCHRAUBE UNC TORNILLO UNC
3	385362X1		**2**	WASHER	RONDELLE RONDELLA	SCHEIBE ARANDELA
4	3011582X91		**1**	UNION	RACCORD RACCORDO	VERSCHRAUBUNG RACOR
5	835025M1	4	**4**	O RING	JOINT TORIQUE GIUNTO DI TENUTA	O-RING JUNTA TOROIDAL
6	4275570M1		**1**	TUBE	TUBE TUBO.	ROHR TUBO.
7	3011087X91		**1**	UNION	RACCORD RACCORDO	VERSCHRAUBUNG RACOR
8	3011149X1	7	**1**	O RING	JOINT TORIQUE GIUNTO DI TENUTA	O-RING JUNTA TOROIDAL
9	3011044X91		**1**	UNION	RACCORD RACCORDO	VERSCHRAUBUNG RACOR
10	3011037X1	9	**1**	SEAL	JOINT ETANCHEITE GIUNTO ROTONDO	DICHTRING JUNTA REDONDA
11	**3787655M2**		**1**	STRAINER	CREPINE SUCCHIEROLA	SAUGKORB ALCACHOFA
12	4275573M1		**2**	UNION	RACCORD RACCORDO	VERSCHRAUBUNG RACOR
13	3019397X1	12	**1**	O RING	JOINT TORIQUE GIUNTO DI TENUTA	O-RING JUNTA TOROIDAL
14	3011618X91	M10	**1**	UNION	RACCORD RACCORDO	VERSCHRAUBUNG RACOR
15	338760X1	14	**1**	O RING	JOINT TORIQUE GIUNTO DI TENUTA	O-RING JUNTA TOROIDAL
16	4276120M1	◄► 430MM	**1**	HYDR. HOSE	FLEXIBLE TUBOFLEX IDRAUL	HYDR. SCHLAUCH TUBO HIDRAULICO
17	X548887266000		**1**	O RING	JOINT TORIQUE GIUNTO DI TENUTA	O-RING JUNTA TOROIDAL
18	4275575M1		**1**	UNION	RACCORD RACCORDO	VERSCHRAUBUNG RACOR
19	339160X1	M5X10	**4**	HEX. SOCK. SCREW	VIS TETE HEX VITE PARKER	ZYLINDERSCHRAUBE TORN.CAB.HUECA
20	4276122M1	◄► 650MM	**1**	HYDR. HOSE	FLEXIBLE TUBOFLEX IDRAUL	HYDR. SCHLAUCH TUBO HIDRAULICO
21	4277199M1		**1**	UNION	RACCORD RACCORDO	VERSCHRAUBUNG RACOR
22	3011147X1	21	**1**	O RING	JOINT TORIQUE GIUNTO DI TENUTA	O-RING JUNTA TOROIDAL
23	4285282M1	[AB] 4 BARS	**1**	PRESSURE SWITCH	MANO CONTACT PRESSOSTATO	DRUCKSCHALTER INTERRUP PRESION
24	1440012X1	➡| ...	**1**	GASKET	JOINT GIUNTO PIANO	FLACHDICHTUNG JUNTA PLANA
24*	3010890X1	|➡ ...	**1**	BUSH	BAGUE BOCCOLA	RING CASQUILLO
25	339124X1	M8X16	**3**	HEX. SOCK. SCREW	VIS TETE HEX VITE PARKER	ZYLINDERSCHRAUBE TORN.CAB.HUECA

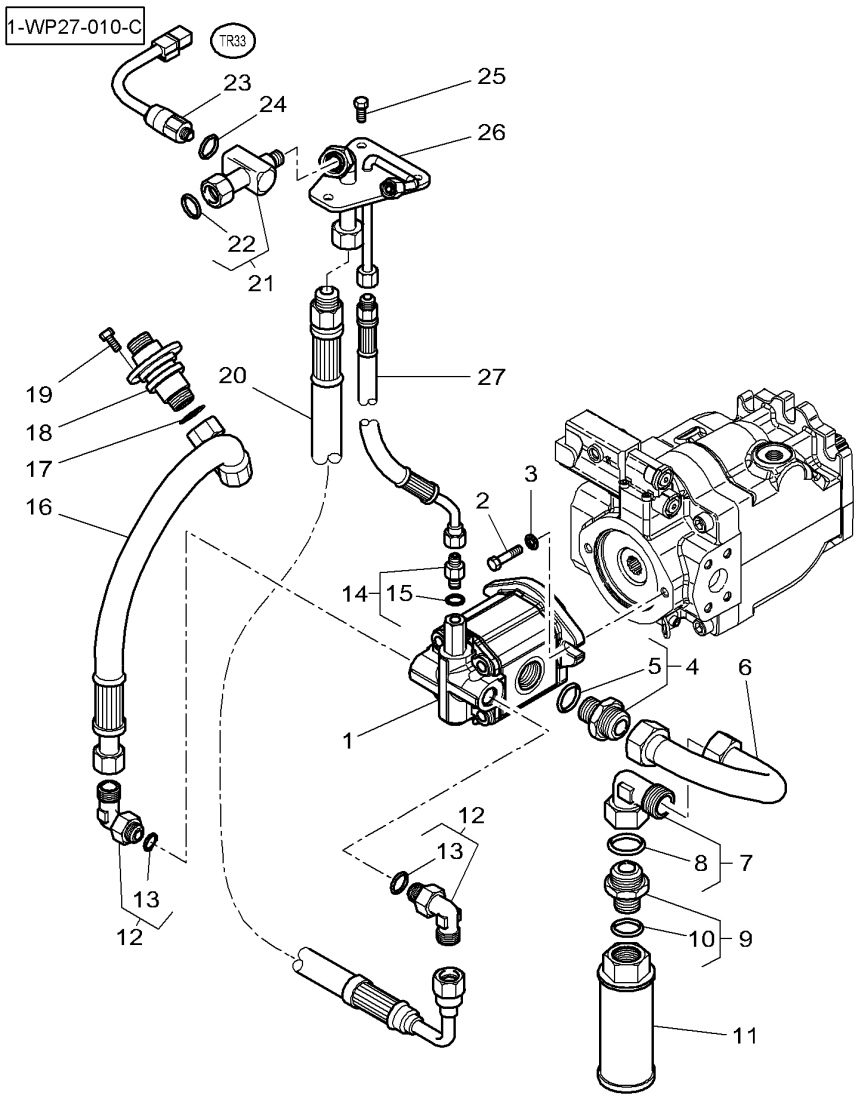

26	4274547M91		**1**	TUBE	TUBE TUBO. ROHR TUBO.
27	4276121M1	◀▶ 220MM	**1**	HYDR. HOSE	FLEXIBLE TUBOFLEX IDRAUL HYDR. SCHLAUCH TUBO HIDRAULICO

[A] SENSOR LOW PRESSURE
CAPTEUR BASSE PRESSION
EMPFANGER NIEDERDRUCK
CAPTATORE PRESSIONE BASSA
CAPTADOR BAJA PRESION

[B] STEERING
DIRECTION
LENKUNG
DIRECCION
STERZO

Auxiliary Distributors Installation
Montage Distributeurs Auxiliaires
Zuzatzeinbausverteilers
Intallazione Distributori Ausiliari
Instalacion Distribuidores Auxiliares

70-185

Hydraulic Lines With 4 Distributors
Tuyauteries Avec 4 Distributeurs
Leitungen Mit 4 Verteilers
Tubazioni Con 4 Distributori
Circuito Con 4 Distribuidores

PLANCHES EN COURS D'ILLUSTRATION

1*	4275551M1	[A] ∅ 25 MM	1	TUBE	TUBE TUBO.	ROHR TUBO.
2	3011082X91		1	ELBOW	COUDE GOMITO	WINKELSTUECK CODO
3	3011144X1	2	1	O RING	JOINT TORIQUE GIUNTO DI TENUTA	O-RING JUNTA TOROIDAL
4*	4275555M1	[A] ∅ 8 MM	1	TUBE	TUBE TUBO.	ROHR TUBO.
5	3011045X91	M12	1	UNION	RACCORD RACCORDO	VERSCHRAUBUNG RACOR
6	3011061X1	5	1	O RING	JOINT TORIQUE GIUNTO DI TENUTA	O-RING JUNTA TOROIDAL
7	3793729M1		1	REDUCER	REDUCTEUR RIDUTTORE	REDUZIERSTUECK REDUCCION
8*	4275553M1	[A] ∅ 28 MM	1	TUBE	TUBE TUBO.	ROHR TUBO.
9	3787920M1		1	UNION	RACCORD RACCORDO	VERSCHRAUBUNG RACOR
10	4274990M2	M22	9	UNION	RACCORD RACCORDO	VERSCHRAUBUNG RACOR
11	3019398X1	10	1	O RING	JOINT TORIQUE GIUNTO DI TENUTA	O-RING JUNTA TOROIDAL
12*	4274975M1	[A] ∅ 15 MM	4	TUBE	TUBE TUBO.	ROHR TUBO.
13	4274987M2		2	SUPPORT	SUPPORT SOPPORTO	TRAGER SOPORTE
14	390972X1		3	FLAT WASHER	RONDELLE PLATE RONDELLE PIANA	UNTERLEGSCHEIBEN ARANDELA PLANA
15	3011085X91		1	UNION	RACCORD RACCORDO	VERSCHRAUBUNG RACOR
16	3011147X1	15	1	O RING	JOINT TORIQUE GIUNTO DI TENUTA	O-RING JUNTA TOROIDAL
17*	4274838M1	[A] → R033008 ∅ 15 MM	1	TUBE	TUBE TUBO.	ROHR TUBO.
17	4274838M2	→ R033009 ∅ 15 MM	1	TUBE	TUBE TUBO.	ROHR TUBO.
18*	4274836M1	[A] → R033008 ∅ 15 MM	1	TUBE	TUBE TUBO.	ROHR TUBO.
18	4274836M2	→ R033009 ∅ 15 MM	1	TUBE	TUBE TUBO.	ROHR TUBO.
19*	4274834M1	[A] → R033008 ∅ 15 MM	1	TUBE	TUBE TUBO.	ROHR TUBO.
19	4274834M2	→ R033009 ∅ 15 MM	1	TUBE	TUBE TUBO.	ROHR TUBO.
20*	4274562M3		1	SUPPORT	SUPPORT SOPPORTO	TRAGER SOPORTE
21	339230X1	M6 X 10 → R321048	4	HEX. SOCK. SCREW	VIS TETE HEX VITE PARKER	ZYLINDERSCHRAUBE TORN.CAB.HUECA

Auxiliary Distributors Installation
Montage Distributeurs Auxiliaires
Zuzatzeinbausverteilers
Intallazione Distributori Ausiliari
Instalacion Distribuidores Auxiliares

70-185

Hydraulic Lines With 4 Distributors
Tuyauteries Avec 4 Distributeurs
Leitungen Mit 4 Verteilers
Tubazioni Con 4 Distributori
Circuito Con 4 Distribuidores

PLANCHES EN COURS D'ILLUSTRATION

21*	339230X1	[D] M6 X 10 ➡ R321049		**3**	HEX. SOCK. SCREW	VIS TETE HEX VITE PARKER	ZYLINDERSCHRAUBE TORN.CAB.HUECA
22	3011093X91			**1**	UNION	RACCORD RACCORDO	VERSCHRAUBUNG RACOR
23	3011147X1	22		**1**	O RING	JOINT TORIQUE GIUNTO DI TENUTA	O-RING JUNTA TOROIDAL
24	3011089X91			**4**	UNION	RACCORD RACCORDO	VERSCHRAUBUNG RACOR
25	3011147X1	24		**1**	O RING	JOINT TORIQUE GIUNTO DI TENUTA	O-RING JUNTA TOROIDAL
26	339169X1	M8		**3**	NUT	ECROU DADO	MUTTER TUERCA
27*	4274840M1	[A] ➡ R033008 ∅ 15 MM		**1**	TUBE	TUBE TUBO.	ROHR TUBO.
27	4274840M2	➡ R033009 ∅ 15 MM		**1**	TUBE	TUBE TUBO.	ROHR TUBO.
28*	4274839M1	[A] ➡ R033008 ∅ 15 MM		**1**	TUBE	TUBE TUBO.	ROHR TUBO.
28	4274839M2	➡ R033009 ∅ 15 MM		**1**	TUBE	TUBE TUBO.	ROHR TUBO.
29*	4274837M1	[A] ➡ R033008 ∅ 15 MM		**1**	TUBE	TUBE TUBO.	ROHR TUBO.
29	4274837M2	➡ R033009 ∅ 15 MM		**1**	TUBE	TUBE TUBO.	ROHR TUBO.
30*	4274835M1	[A] ➡ R033008 ∅ 15 MM		**1**	TUBE	TUBE TUBO.	ROHR TUBO.
30	4274835M2	➡ R033009 ∅ 15 MM		**1**	TUBE	TUBE TUBO.	ROHR TUBO.
31*	4274833M1	[A] ➡ R033008 ∅ 15 MM		**1**	TUBE	TUBE TUBO.	ROHR TUBO.
31	4274833M2	➡ R033009 ∅ 15 MM		**1**	TUBE	TUBE TUBO.	ROHR TUBO.
32	338725X1			**4**	UNION	RACCORD RACCORDO	VERSCHRAUBUNG RACOR
33	3011136X91			**8**	TAP	OBTURATEUR. TAPPO*	HAHN GRIFO
34	3011147X1	33		**1**	O RING	JOINT TORIQUE GIUNTO DI TENUTA	O-RING JUNTA TOROIDAL
35	3011119X1			**8**	NUT	ECROU DADO	MUTTER TUERCA
36	3011055X91	M33		**1**	UNION	RACCORD RACCORDO	VERSCHRAUBUNG RACOR
37	3011062X1	36		**1**	O RING	JOINT TORIQUE GIUNTO DI TENUTA	O-RING JUNTA TOROIDAL
38	3011088X91			**1**	ELBOW NIPPLE	RACCORD COUDE NIPPLO GOMITO	WINKELSTUTZEN CODO DE UNION

PLANCHES EN COURS D'ILLUSTRATION

39	3011150X1	38	**1**	O RING	JOINT TORIQUE GIUNTO DI TENUTA	O-RING JUNTA TOROIDAL
40	3011534X91		**1**	UNION	RACCORD RACCORDO	VERSCHRAUBUNG RACOR
41	3019398X1	40	**1**	O RING	JOINT TORIQUE GIUNTO DI TENUTA	O-RING JUNTA TOROIDAL
42	4278266M1		**4**	UNION	RACCORD RACCORDO	VERSCHRAUBUNG RACOR
43	3011147X1	42	**1**	O RING	JOINT TORIQUE GIUNTO DI TENUTA	O-RING JUNTA TOROIDAL
44	3011807X1	➡	**16**	BUSH	BAGUE BOCCOLA	RING CASQUILLO
45*	3907821M1	∅ 15 MM (type AR3)	**1**	O RING	JOINT TORIQUE GIUNTO DI TENUTA	O-RING JUNTA TOROIDAL
45*	3907830M1	∅ 25 MM (type AR3)	**1**	O RING	JOINT TORIQUE GIUNTO DI TENUTA	O-RING JUNTA TOROIDAL
45*	3907820M1	∅ 8 MM (type AR3)	**1**	O RING	JOINT TORIQUE GIUNTO DI TENUTA	O-RING JUNTA TOROIDAL
45*	3907829M1	∅ 28 MM (type AR3)	**1**	O RING	JOINT TORIQUE GIUNTO DI TENUTA	O-RING JUNTA TOROIDAL
46*		[BC]	**1**	GASKET	JOINT GIUNTO PIANO	FLACHDICHTUNG JUNTA PLANA
47*	3011807X1	∅ 15 MM (type OE2)	**1**	BUSH	BAGUE BOCCOLA	RING CASQUILLO
47*	3011820X1	∅ 25 MM (type OE2)	**1**	BUSH	BAGUE BOCCOLA	RING CASQUILLO
47*	3011804X1	∅ 8-12.3 MM (type OE2)	**1**	BUSH	BAGUE BOCCOLA	RING CASQUILLO
47*	3011814X1	∅ 8-14.3 MM (type OE2)	**1**	BUSH	BAGUE BOCCOLA	RING CASQUILLO
47*	3011810X1	∅ 28 MM (type OE2)	**1**	BUSH	BAGUE BOCCOLA	RING CASQUILLO
48*	3781936M1	[D] ➡ R321049	**1**	BRIDLE	BRIDE BRIGLIA	LASCHENSPANNBAND BRIDA
49*	339229X1	[D] M6 X 40 ➡ R321049	**1**	HEX. SOCK. SCREW	VIS TETE HEX VITE PARKER	ZYLINDERSCHRAUBE TORN.CAB.HUECA

[A] SEE DIAGRAM FOR THE DETAIL OF THE ENDS OF TUBE
VOIR SCHEMA POUR LE DETAIL DES EXTREMITES DU TUBE
SIEHE SCHEMA FÜR DIE EINZELHEIT DER EXTREMITES DER ROEHRE
VEDERE SCHEMA PER IL DETTAGLIO DEI EXTREMITES DEL TUBO
VER ESQUEMA PARA EL DETALLE DE LOS EXTREMITES DEL TUBO

[B] SQUARE SECTION
SECTION CARREE
QUADRATISH KLINGE
SEZIONE QUADRATA
SECCION QUADRADA

Auxiliary Distributors Installation **Montage Distributeurs Auxiliaires** **Zuzatzeinbausverteilers** **Intallazione Distributori Ausiliari** **Instalacion Distribuidores Auxiliares**	**70-185**	**Hydraulic Lines With 4 Distributors** **Tuyauteries Avec 4 Distributeurs** **Leitungen Mit 4 Verteilers** **Tubazioni Con 4 Distributori** **Circuito Con 4 Distribuidores**

PLANCHES EN

COURS

D'ILLUSTRATION

[C] NOT SUPLLIED
NON SERVI
NICHT GEDIENT
NON SERVITO
NO SERVIDO

[D] VALID ALSO FOR TRACTOR R313045
VALABLE EGALEMENT POUR TRACTEUR R313045
GULTIG EBENFALLS FUR TRAKTOR R313045
VALIDO ANCHE PER TRATTORE R313045
VALIDO TAMBIEN PARA TRACTOR R313045

Auxiliary Distributors Installation
Montage Distributeurs Auxiliaires
Zuzatzeinbausverteilers
Intallazione Distributori Ausiliari
Instalacion Distribuidores Auxiliares

70-190

Hydraulic Lines With 5 Distributors
Tuyauteries Avec 5 Distributeurs
Leitungen Mit 5 Verteilers
Tubazioni Con 5 Distributori
Circuito Con 5 Distribuidores

PLANCHES EN COURS D'ILLUSTRATION

1*	4275550M1	[A] ∅ 25 MM	1	TUBE	TUBE TUBO.	ROHR TUBO.
2	3011082X91		1	ELBOW	COUDE GOMITO	WINKELSTUECK CODO
3	3011144X1	2	1	O RING	JOINT TORIQUE GIUNTO DI TENUTA	O-RING JUNTA TOROIDAL
4*	4275554M1	[A] ∅ 8 MM	1	TUBE	TUBE TUBO.	ROHR TUBO.
5	3011045X91	M12	1	UNION	RACCORD RACCORDO	VERSCHRAUBUNG RACOR
6	3011061X1	5	1	O RING	JOINT TORIQUE GIUNTO DI TENUTA	O-RING JUNTA TOROIDAL
7	3793729M1		1	REDUCER	REDUCTEUR RIDUTTORE	REDUZIERSTUECK REDUCCION
8*	4275552M1	[A] ∅ 28 MM	1	TUBE	TUBE TUBO.	ROHR TUBO.
9	3787920M1		1	UNION	RACCORD RACCORDO	VERSCHRAUBUNG RACOR
10	4274990M2	M22	11	UNION	RACCORD RACCORDO	VERSCHRAUBUNG RACOR
11	3019398X1	10	1	O RING	JOINT TORIQUE GIUNTO DI TENUTA	O-RING JUNTA TOROIDAL
12*	4274975M1	[A] ∅ 15 MM	5	TUBE	TUBE TUBO.	ROHR TUBO.
13	4274987M2		2	SUPPORT	SUPPORT SOPPORTO	TRAGER SOPORTE
14	390972X1		3	FLAT WASHER	RONDELLE PLATE RONDELLE PIANA	UNTERLEGSCHEIBEN ARANDELA PLANA
15*	4274973M1	[A] ➡ R039060 ∅ 15 MM	1	TUBE	TUBE TUBO.	ROHR TUBO.
15	4274973M2	➡ R039061 ∅ 15 MM	1	TUBE	TUBE TUBO.	ROHR TUBO.
16*	4274840M1	[A] ➡ R033008 ∅ 15 MM	1	TUBE	TUBE TUBO.	ROHR TUBO.
16	4274840M2	➡ R033009 ∅ 15 MM	1	TUBE	TUBE TUBO.	ROHR TUBO.
17*	4274838M1	[A] ➡ R033008 ∅ 15 MM	1	TUBE	TUBE TUBO.	ROHR TUBO.
17	4274838M2	➡ R033009 ∅ 15 MM	1	TUBE	TUBE TUBO.	ROHR TUBO.
18*	4274836M1	[A] ➡ R033008 ∅ 15 MM	1	TUBE	TUBE TUBO.	ROHR TUBO.
18	4274836M2	➡ R033009 ∅ 15 MM	1	TUBE	TUBE TUBO.	ROHR TUBO.
19*	4274834M1	[A] ➡ R033008 ∅ 15 MM	1	TUBE	TUBE TUBO.	ROHR TUBO.

Auxiliary Distributors Installation
Montage Distributeurs Auxiliaires
Zuzatzeinbausverteilers
Intallazione Distributori Ausiliari
Instalacion Distribuidores Auxiliares

70-190

Hydraulic Lines With 5 Distributors
Tuyauteries Avec 5 Distributeurs
Leitungen Mit 5 Verteilers
Tubazioni Con 5 Distributori
Circuito Con 5 Distribuidores

PLANCHES EN COURS D'ILLUSTRATION

19	4274834M2	➡ R033009 ∅ 15 MM	**1**	TUBE	TUBE TUBO.	ROHR TUBO.
20*	4274562M3		**1**	SUPPORT	SUPPORT SOPPORTO	TRAGER SOPORTE
21	339230X1	M6 X 10 ➡ R321048	**4**	HEX. SOCK. SCREW	VIS TETE HEX VITE PARKER	ZYLINDERSCHRAUBE TORN.CAB.HUECA
21*	339230X1	[D] M6 X 10 ➡ R321049	**3**	HEX. SOCK. SCREW	VIS TETE HEX VITE PARKER	ZYLINDERSCHRAUBE TORN.CAB.HUECA
22	3011093X91		**1**	UNION	RACCORD RACCORDO	VERSCHRAUBUNG RACOR
23	3011147X1	22	**1**	O RING	JOINT TORIQUE GIUNTO DI TENUTA	O-RING JUNTA TOROIDAL
24	3011089X91		**5**	UNION	RACCORD RACCORDO	VERSCHRAUBUNG RACOR
25	3011147X1	24	**1**	O RING	JOINT TORIQUE GIUNTO DI TENUTA	O-RING JUNTA TOROIDAL
26	339169X1	M8	**3**	NUT	ECROU DADO	MUTTER TUERCA
27*	4274972M1	[A] ➡ R039060 ∅ 15 MM	**1**	TUBE	TUBE TUBO.	ROHR TUBO.
27	4274972M2	➡ R039061 ∅ 15 MM	**1**	TUBE	TUBE TUBO.	ROHR TUBO.
28*	4274839M1	[A] ➡ R033008 ∅ 15 MM	**1**	TUBE	TUBE TUBO.	ROHR TUBO.
28	4274839M2	➡ R033009 ∅ 15 MM	**1**	TUBE	TUBE TUBO.	ROHR TUBO.
29*	4274837M1	[A] ➡ R033008 ∅ 15 MM	**1**	TUBE	TUBE TUBO.	ROHR TUBO.
29	4274837M2	➡ R033009 ∅ 15 MM	**1**	TUBE	TUBE TUBO.	ROHR TUBO.
30*	4274835M1	[A] ➡ R033008 ∅ 15 MM	**1**	TUBE	TUBE TUBO.	ROHR TUBO.
30	4274835M2	➡ R033009 ∅ 15 MM	**1**	TUBE	TUBE TUBO.	ROHR TUBO.
31*	4274833M1	[A] ➡ R033008 ∅ 15 MM	**1**	TUBE	TUBE TUBO.	ROHR TUBO.
31	4274833M2	➡ R033009 ∅ 15 MM	**1**	TUBE	TUBE TUBO.	ROHR TUBO.
32	338725X1		**5**	UNION	RACCORD RACCORDO	VERSCHRAUBUNG RACOR
33	3011136X91		**10**	TAP	OBTURATEUR. TAPPO*	HAHN GRIFO
34	3011147X1	33	**1**	O RING	JOINT TORIQUE GIUNTO DI TENUTA	O-RING JUNTA TOROIDAL
35	3011119X1		**10**	NUT	ECROU DADO	MUTTER TUERCA

Auxiliary Distributors Installation
Montage Distributeurs Auxiliaires
Zuzatzeinbausverteilers
Intallazione Distributori Ausiliari
Instalacion Distribuidores Auxiliares

70-190

Hydraulic Lines With 5 Distributors
Tuyauteries Avec 5 Distributeurs
Leitungen Mit 5 Verteilers
Tubazioni Con 5 Distributori
Circuito Con 5 Distribuidores

PLANCHES EN COURS D'ILLUSTRATION

36	3011055X91	M33	**1**	UNION	RACCORD RACCORDO	VERSCHRAUBUNG RACOR
37	3011062X1	36	**1**	O RING	JOINT TORIQUE GIUNTO DI TENUTA	O-RING JUNTA TOROIDAL
38	3011088X91		**1**	ELBOW NIPPLE	RACCORD COUDE NIPPLO GOMITO	WINKELSTUTZEN CODO DE UNION
39	3011150X1	38	**1**	O RING	JOINT TORIQUE GIUNTO DI TENUTA	O-RING JUNTA TOROIDAL
40	3011534X91		**1**	UNION	RACCORD RACCORDO	VERSCHRAUBUNG RACOR
41	3019398X1	40	**1**	O RING	JOINT TORIQUE GIUNTO DI TENUTA	O-RING JUNTA TOROIDAL
42	3011085X91		**1**	UNION	RACCORD RACCORDO	VERSCHRAUBUNG RACOR
43	3011147X1	42	**1**	O RING	JOINT TORIQUE GIUNTO DI TENUTA	O-RING JUNTA TOROIDAL
44	4278266M1		**5**	UNION	RACCORD RACCORDO	VERSCHRAUBUNG RACOR
45	3011147X1	44	**1**	O RING	JOINT TORIQUE GIUNTO DI TENUTA	O-RING JUNTA TOROIDAL
46	3011807X1	➡	**20**	BUSH	BAGUE BOCCOLA	RING CASQUILLO
47*	3907830M1	∅ 25 MM (type AR3)	**1**	O RING	JOINT TORIQUE GIUNTO DI TENUTA	O-RING JUNTA TOROIDAL
47*	3907820M1	∅ 8 MM (type AR3)	**1**	O RING	JOINT TORIQUE GIUNTO DI TENUTA	O-RING JUNTA TOROIDAL
47*	3907829M1	∅ 28 MM (type AR3)	**1**	O RING	JOINT TORIQUE GIUNTO DI TENUTA	O-RING JUNTA TOROIDAL
47*	3907821M1	∅ 15 MM (type AR3)	**1**	O RING	JOINT TORIQUE GIUNTO DI TENUTA	O-RING JUNTA TOROIDAL
48*		[BC]	**1**	GASKET	JOINT GIUNTO PIANO	FLACHDICHTUNG JUNTA PLANA
49*	3011820X1	∅ 25 MM (type EO2)	**1**	BUSH	BAGUE BOCCOLA	RING CASQUILLO
49*	3011804X1	∅ 8-12.3 MM (typeOE2)	**1**	BUSH	BAGUE BOCCOLA	RING CASQUILLO
49*	3011814X1	∅ 8-14.3 MM (typeOE2)	**1**	BUSH	BAGUE BOCCOLA	RING CASQUILLO
49*	3011810X1	∅ 28 MM (type OE2)	**1**	BUSH	BAGUE BOCCOLA	RING CASQUILLO
49*	3011807X1	∅ 15 MM (type OE2)	**1**	BUSH	BAGUE BOCCOLA	RING CASQUILLO
50*	3781936M1	[D] ➡ R321049	**1**	BRIDLE	BRIDE BRIGLIA	LASCHENSPANNBAND BRIDA
51*	339229X1	[D] M6 X 40 ➡ R321049	**1**	HEX. SOCK. SCREW	VIS TETE HEX VITE PARKER	ZYLINDERSCHRAUBE TORN.CAB.HUECA

[A] SEE DIAGRAM FOR THE DETAIL OF THE ENDS OF TUBE
VOIR SCHEMA POUR LE DETAIL DES EXTREMITES DU TUBE
SIEHE SCHEMA FÜR DIE EINZELHEIT DER EXTREMITES DER ROEHRE
VEDERE SCHEMA PER IL DETTAGLIO DEI EXTREMITES DEL TUBO
VER ESQUEMA PARA EL DETALLE DE LOS EXTREMITES DEL TUBO

Auxiliary Distributors Installation **Montage Distributeurs Auxiliaires** **Zuzatzeinbausverteilers** **Intallazione Distributori Ausiliari** **Instalacion Distribuidores Auxiliares**	**70-190**	**Hydraulic Lines With 5 Distributors** **Tuyauteries Avec 5 Distributeurs** **Leitungen Mit 5 Verteilers** **Tubazioni Con 5 Distributori** **Circuito Con 5 Distribuidores**

PLANCHES EN

COURS

D'ILLUSTRATION

[B] SQUARE SECTION
SECTION CARREE
QUADRATISH KLINGE
SEZIONE QUADRATA
SECCION QUADRADA

[C] NOT SUPLLIED
NON SERVI
NICHT GEDIENT
NON SERVITO
NO SERVIDO

[D] VALID ALSO FOR TRACTOR R313045
VALABLE EGALEMENT POUR TRACTEUR R313045
GULTIG EBENFALLS FUR TRAKTOR R313045
VALIDO ANCHE PER TRATTORE R313045
VALIDO TAMBIEN PARA TRACTOR R313045

Auxiliary Distributors Installation
Montage Distributeurs Auxiliaires
Zuzatzeinbausverteilers
Intallazione Distributori Ausiliari
Instalacion Distribuidores Auxiliares

70-195

Hydraulic Lines With 6 Distributors
Tuyauteries Avec 6 Distributeurs
Leitungen Mit 6 Verteilers
Tubazioni Con 6 Distributori
Circuito Con 6 Distribuidores

PLANCHES EN COURS D'ILLUSTRATION

1*	4274991M1	[A] ∅ 25 MM	1	TUBE	TUBE TUBO.	ROHR TUBO.
2	3011082X91		1	ELBOW	COUDE GOMITO	WINKELSTUECK CODO
3	3011144X1	2	1	O RING	JOINT TORIQUE GIUNTO DI TENUTA	O-RING JUNTA TOROIDAL
4*	4274993M1	[A] ∅ 8 MM	1	TUBE	TUBE TUBO.	ROHR TUBO.
5	3011045X91	M12	1	UNION	RACCORD RACCORDO	VERSCHRAUBUNG RACOR
6	3011061X1	5	1	O RING	JOINT TORIQUE GIUNTO DI TENUTA	O-RING JUNTA TOROIDAL
7	3793729M1		1	REDUCER	REDUCTEUR RIDUTTORE	REDUZIERSTUECK REDUCCION
8*	4274992M1	[A] ∅ 28 MM	1	TUBE	TUBE TUBO.	ROHR TUBO.
9	3787920M1		1	UNION	RACCORD RACCORDO	VERSCHRAUBUNG RACOR
10	4274990M2	M22	13	UNION	RACCORD RACCORDO	VERSCHRAUBUNG RACOR
11	3019398X1	10	1	O RING	JOINT TORIQUE GIUNTO DI TENUTA	O-RING JUNTA TOROIDAL
12*	4274975M1	[A] ∅ 15 MM	6	TUBE	TUBE TUBO.	ROHR TUBO.
13	4274987M2		2	SUPPORT	SUPPORT SOPPORTO	TRAGER SOPORTE
14*	4274832M1	[A] ➡ R061035 ∅ 15 MM	1	TUBE	TUBE TUBO.	ROHR TUBO.
14	4274832M2	➡ R061036 ∅ 15 MM	1	TUBE	TUBE TUBO.	ROHR TUBO.
15*	4274973M1	[A] ➡ R039060 ∅ 15 MM	1	TUBE	TUBE TUBO.	ROHR TUBO.
15	4274973M2	➡ R039061 ∅ 15 MM	1	TUBE	TUBE TUBO.	ROHR TUBO.
16*	4274840M1	[A] ➡ R033008 ∅ 15 MM	1	TUBE	TUBE TUBO.	ROHR TUBO.
16	4274840M2	➡ R033009 ∅ 15 MM	1	TUBE	TUBE TUBO.	ROHR TUBO.
17*	4274838M1	[A] ➡ R033008 ∅ 15 MM	1	TUBE	TUBE TUBO.	ROHR TUBO.
17	4274838M2	➡ R033009 ∅ 15 MM	1	TUBE	TUBE TUBO.	ROHR TUBO.
18*	4274836M1	[A] ➡ R033008 ∅ 15 MM	1	TUBE	TUBE TUBO.	ROHR TUBO.
18	4274836M2	➡ R033009 ∅ 15 MM	1	TUBE	TUBE TUBO.	ROHR TUBO.

Auxiliary Distributors Installation
Montage Distributeurs Auxiliaires
Zuzatzeinbausverteilers
Intallazione Distributori Ausiliari
Instalacion Distribuidores Auxiliares

70-195

Hydraulic Lines With 6 Distributors
Tuyauteries Avec 6 Distributeurs
Leitungen Mit 6 Verteilers
Tubazioni Con 6 Distributori
Circuito Con 6 Distribuidores

PLANCHES EN COURS D'ILLUSTRATION

19*	4274834M1	[A] ➡ R033008 ∅ 15 MM	**1**	TUBE	TUBE TUBO.	ROHR TUBO.
19	4274834M2	➡ R033009 ∅ 15 MM	**1**	TUBE	TUBE TUBO.	ROHR TUBO.
20*	4274562M3		**1**	SUPPORT	SUPPORT SOPPORTO	TRAGER SOPORTE
21	339230X1	M6 X 10 ➡ R321048	**4**	HEX. SOCK. SCREW	VIS TETE HEX VITE PARKER	ZYLINDERSCHRAUBE TORN.CAB.HUECA
21*	339230X1	[D] M6 X 10 ➡ R321049	**3**	HEX. SOCK. SCREW	VIS TETE HEX VITE PARKER	ZYLINDERSCHRAUBE TORN.CAB.HUECA
22	3011093X91		**1**	UNION	RACCORD RACCORDO	VERSCHRAUBUNG RACOR
23	3011147X1	22	**1**	O RING	JOINT TORIQUE GIUNTO DI TENUTA	O-RING JUNTA TOROIDAL
24	3011089X91		**6**	UNION	RACCORD RACCORDO	VERSCHRAUBUNG RACOR
25	3011147X1	24	**1**	O RING	JOINT TORIQUE GIUNTO DI TENUTA	O-RING JUNTA TOROIDAL
26*	4274974M1	[A] ➡ R061035 ∅ 15 MM	**1**	TUBE	TUBE TUBO.	ROHR TUBO.
26	4274974M2	➡ R061036 ∅ 15 MM	**1**	TUBE	TUBE TUBO.	ROHR TUBO.
27*	4274972M1	[A] ➡ R039060 ∅ 15 MM	**1**	TUBE	TUBE TUBO.	ROHR TUBO.
27	4274972M2	➡ R039061 ∅ 15 MM	**1**	TUBE	TUBE TUBO.	ROHR TUBO.
28*	4274839M1	[A] ➡ R033008 ∅ 15 MM	**1**	TUBE	TUBE TUBO.	ROHR TUBO.
28	4274839M2	➡ R033009 ∅ 15 MM	**1**	TUBE	TUBE TUBO.	ROHR TUBO.
29*	4274837M1	[A] ➡ R033008 ∅ 15 MM	**1**	TUBE	TUBE TUBO.	ROHR TUBO.
29	4274837M2	➡ R033009 ∅ 15 MM	**1**	TUBE	TUBE TUBO.	ROHR TUBO.
30*	4274835M1	[A] ➡ R033008 ∅ 15 MM	**1**	TUBE	TUBE TUBO.	ROHR TUBO.
30	4274835M2	➡ R033009	**1**	TUBE	TUBE TUBO.	ROHR TUBO.
31*	4274833M1	[A] ➡ R033008 ∅ 15 MM	**1**	TUBE	TUBE TUBO.	ROHR TUBO.
31	4274833M2	➡ R033009 ∅ 15 MM	**1**	TUBE	TUBE TUBO.	ROHR TUBO.

Auxiliary Distributors Installation
Montage Distributeurs Auxiliaires
Zuzatzeinbausverteilers
Intallazione Distributori Ausiliari
Instalacion Distribuidores Auxiliares

70-195

Hydraulic Lines With 6 Distributors
Tuyauteries Avec 6 Distributeurs
Leitungen Mit 6 Verteilers
Tubazioni Con 6 Distributori
Circuito Con 6 Distribuidores

PLANCHES EN COURS D'ILLUSTRATION

32	3011136X91		**12**	TAP	OBTURATEUR. TAPPO*	HAHN GRIFO
33	3011147X1	32	**1**	O RING	JOINT TORIQUE GIUNTO DI TENUTA	O-RING JUNTA TOROIDAL
34	3011119X1		**12**	NUT	ECROU DADO	MUTTER TUERCA
35	3011055X91	M33	**1**	UNION	RACCORD RACCORDO	VERSCHRAUBUNG RACOR
36	3011062X1	35	**1**	O RING	JOINT TORIQUE GIUNTO DI TENUTA	O-RING JUNTA TOROIDAL
37	3011088X91		**1**	ELBOW NIPPLE	RACCORD COUDE NIPPLO GOMITO	WINKELSTUTZEN CODO DE UNION
38	3011150X1	37	**1**	O RING	JOINT TORIQUE GIUNTO DI TENUTA	O-RING JUNTA TOROIDAL
39	3011534X91		**1**	UNION	RACCORD RACCORDO	VERSCHRAUBUNG RACOR
40	3019398X1	39	**1**	O RING	JOINT TORIQUE GIUNTO DI TENUTA	O-RING JUNTA TOROIDAL
41	3011085X91		**1**	UNION	RACCORD RACCORDO	VERSCHRAUBUNG RACOR
42	3011147X1	41	**1**	O RING	JOINT TORIQUE GIUNTO DI TENUTA	O-RING JUNTA TOROIDAL
43	390972X1		**3**	FLAT WASHER	RONDELLE PLATE RONDELLE PIANA	UNTERLEGSCHEIBEN ARANDELA PLANA
44	339169X1	M8	**3**	NUT	ECROU DADO	MUTTER TUERCA
45	4278266M1		**6**	UNION	RACCORD RACCORDO	VERSCHRAUBUNG RACOR
46	3011147X1	45	**1**	O RING	JOINT TORIQUE GIUNTO DI TENUTA	O-RING JUNTA TOROIDAL
47	338725X1		**6**	UNION	RACCORD RACCORDO	VERSCHRAUBUNG RACOR
48	3011807X1	➡	**24**	BUSH	BAGUE BOCCOLA	RING CASQUILLO
49*	3907830M1	∅ 25 MM (type AR3)	**1**	O RING	JOINT TORIQUE GIUNTO DI TENUTA	O-RING JUNTA TOROIDAL
49*	3907820M1	∅ 8 MM (type AR3)	**1**	O RING	JOINT TORIQUE GIUNTO DI TENUTA	O-RING JUNTA TOROIDAL
49*	3907829M1	∅ 28 MM (type AR3)	**1**	O RING	JOINT TORIQUE GIUNTO DI TENUTA	O-RING JUNTA TOROIDAL
49*	3907821M1	∅ 15 MM (type AR3)	**1**	O RING	JOINT TORIQUE GIUNTO DI TENUTA	O-RING JUNTA TOROIDAL
50*		[BC]	**1**	GASKET	JOINT GIUNTO PIANO	FLACHDICHTUNG JUNTA PLANA
51*	3011820X1	∅ 25 MM (type EO2)	**1**	BUSH	BAGUE BOCCOLA	RING CASQUILLO
51*	3011804X1	∅ 8-12.3 MM (typeOE2)	**1**	BUSH	BAGUE BOCCOLA	RING CASQUILLO
51*	3011814X1	∅ 8-14.3 MM (typeOE2)	**1**	BUSH	BAGUE BOCCOLA	RING CASQUILLO
51*	3011810X1	∅ 28 MM (type OE2)	**1**	BUSH	BAGUE BOCCOLA	RING CASQUILLO

Auxiliary Distributors Installation
Montage Distributeurs Auxiliaires
Zuzatzeinbausverteilers
Intallazione Distributori Ausiliari
Instalacion Distribuidores Auxiliares

70-195

Hydraulic Lines With 6 Distributors
Tuyauteries Avec 6 Distributeurs
Leitungen Mit 6 Verteilers
Tubazioni Con 6 Distributori
Circuito Con 6 Distributidores

PLANCHES EN COURS D'ILLUSTRATION

51* 3011807X1	∅ 15 MM (type OE2)	**1**	BUSH	BAGUE BOCCOLA	RING CASQUILLO
52* 3781936M1	[D] ➡ R321049	**1**	BRIDLE	BRIDE BRIGLIA	LASCHENSPANNBAND BRIDA
53* 339229X1	[D] M6 X 40 ➡ R321049	**1**	HEX. SOCK. SCREW	VIS TETE HEX VITE PARKER	ZYLINDERSCHRAUBE TORN.CAB.HUECA

[A] SEE DIAGRAM FOR THE DETAIL OF THE ENDS OF TUBE
VOIR SCHEMA POUR LE DETAIL DES EXTREMITES DU TUBE
SIEHE SCHEMA FÜR DIE EINZELHEIT DER EXTREMITES DER ROEHRE
VEDERE SCHEMA PER IL DETTAGLIO DEI EXTREMITES DEL TUBO
VER ESQUEMA PARA EL DETALLE DE LOS EXTREMITES DEL TUBO

[B] SQUARE SECTION
SECTION CARREE
QUADRATISH KLINGE
SEZIONE QUADRATA
SECCION QUADRADA

[C] NOT SUPLLIED
NON SERVI
NICHT GEDIENT
NON SERVITO
NO SERVIDO

[D] VALID ALSO FOR TRACTOR R313045
VALABLE EGALEMENT POUR TRACTEUR R313045
GULTIG EBENFALLS FUR TRAKTOR R313045
VALIDO ANCHE PER TRATTORE R313045
VALIDO TAMBIEN PARA TRACTOR R313045

Auxiliary Distributor
Distributeur Auxiliaire
Zuzatzverteiler
Distributore Auxiliarie
Distribuidor Auxiliar

70-200

4 Distributors Electrodynamique
4 Distributeurs Electro-Hydraulique
4 Verteilers Elektrodynamischer
4 Distributors Elettroidraulico
4 Distribuidors Electro-Hidraulico

1-WP34-043-C

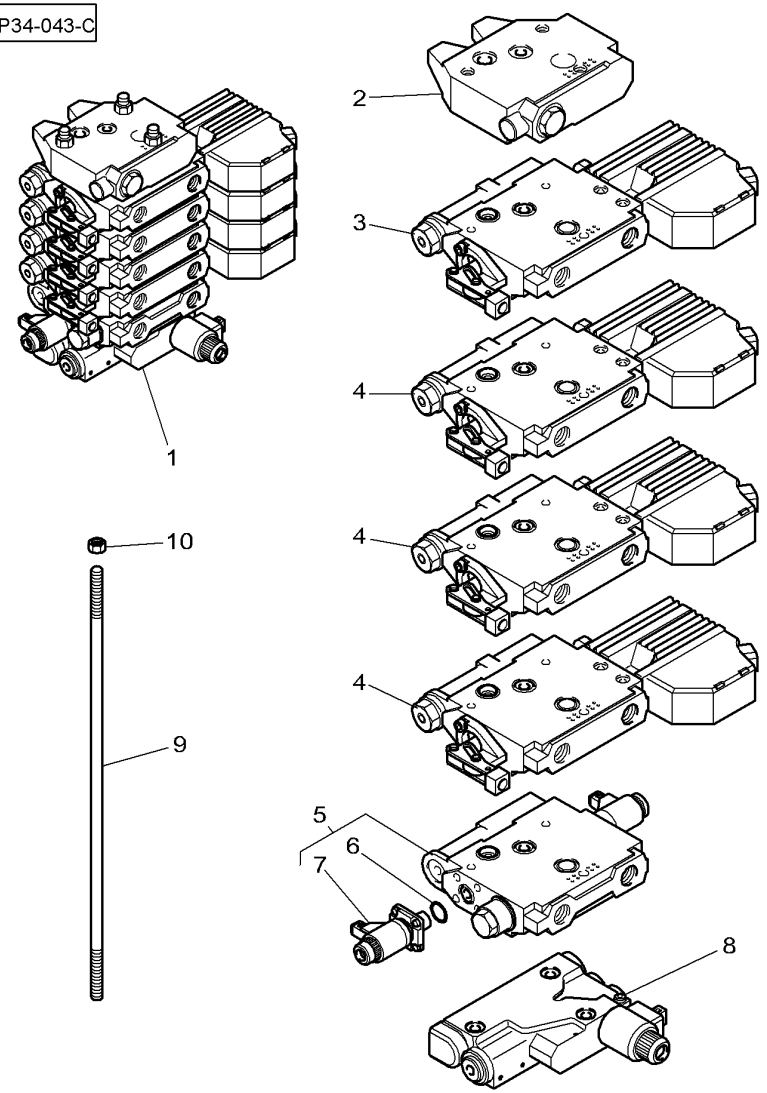

1		[E]	**1**	DISTRIBUTOR	DISTRIBUTEUR DISTRIBUTORE	SAERAEDER DISTRIBUIDOR
2	3796110M1	1	**1**	ELEMENT	ELEMENT ELEMENTO	ELEMENT ELEMENTO
3	3796026M8	1 [ABC]	**1**	DISTRIBUTOR	DISTRIBUTEUR DISTRIBUTORE	SAERAEDER DISTRIBUIDOR
4	3796027M8	1 [AB]	**3**	DISTRIBUTOR	DISTRIBUTEUR DISTRIBUTORE	SAERAEDER DISTRIBUIDOR
5	3796179M2	1 [D]	**1**	CONTROL VALVE	SOUPAPE COMMANDE VALVOLA COMANDO	STEUERVENTIL VALVULA CONTROL
6	F117961030010	5	**1**	KIT, JOINT	JEU JOINTS KIT GIUNTO	DICHTUNGSSATZ JUEGO JUNTAS
7	F716961030040	5	**2**	COIL	BOBINE BOBINA	SPULE BOBINA
8	3796028M2	1 👁 70-220 No 1	**1**	ELEMENT	ELEMENT ELEMENTO	ELEMENT ELEMENTO
9	3799724M1	1 M8 X 306	**3**	STUD	GOUJON SPINOTTO FILETT.	STEHBOLZEN ESPARRAGO ROSCA.
10	3011736X1	1 M8	**3**	NUT	ECROU DADO	MUTTER TUERCA

[A] DISTRIBUTOR WITH ELECTRIC CONTROL
DISTRIBUTEUR AVEC COMMANDE ELECTRIQUE
VERTEILER MIT ELEKTRISCHE SCHALTUNG
DISTRIBUTORE CON COMANDO ELECTRICO
DISTRIBUIDOR CON MANDO ELECTRICO

[B] DIST 4 POSITIONS,FLOW ADJUST,DOUBLE ACTION,ZERO LE AK
DIST 4 POSITIONS,DEBIT REGLABLE,DOUBLE EFFET,FUITE ZERO
VERTEILER 4 POSITIONEN,DURCH.EINSTELLUNG,DOPPELTWI RKENDSPERRVENTIL FUER NULLECKAGE
DIST A 4 POSIZIONI,REGOLATORE DI FLUSSO,DOPPIOEFFE ETTO,ZERO FUGA
DIST A 4 POSICION,DEBITO REGULABLE,DOBLE EFECTO,ZE RO FUGA

[C] WITH TIGHTENESS BALLS
AVEC ETANCHEITE A BILLES
MIT DICHTIGKEIT KUGEL
CON IMPERMEABILITA A SFERAS
CON IMPERMEABILIDAD A BOLAS

[D] HYDRAULIC LIFT VALVE
VALVE HYDRAULIQUE DE RELEVAGE
HYDR. HUBVENTIL
DISTRIBUTORE SOLLEVATORE
VALVULA DE LEVANTE HIDRAULICO

[E] ORDER DETAIL
COMMANDER DETAIL
BESTELLE EINZELN
ORDINARE AL MINUTO
PEDIR DETALLE

Auxiliary Distributor
Distributeur Auxiliaire
Zuzatzverteiler
Distributore Auxiliarie
Distribuidor Auxiliar

70-205

5 Distributors Electrodynamique
5 Distributeurs Electro-Hydraulique
5 Verteilers Elektrodynamischer
5 Distributors Elettroidraulico
5 Distribuidors Electro-Hidraulico

1-WP34-042-C

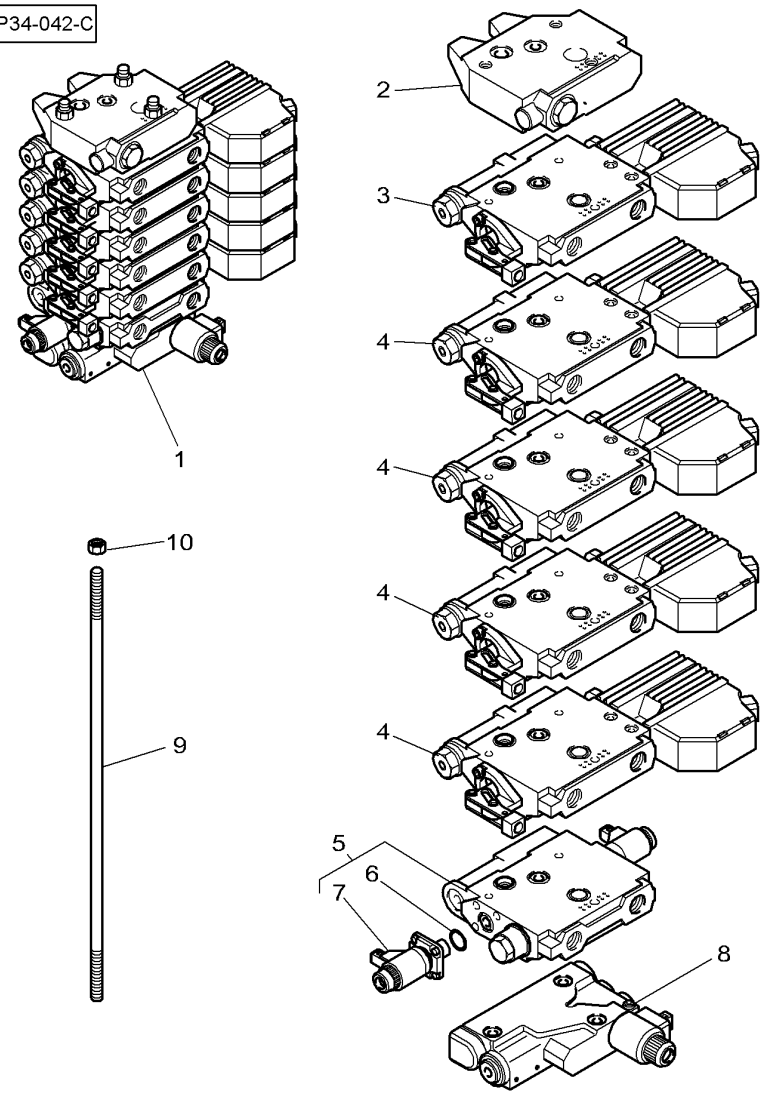

1		[E]	**1**	DISTRIBUTOR	DISTRIBUTEUR DISTRIBUTORE	SAERAEDER DISTRIBUIDOR
2	3796110M1	1	**1**	ELEMENT	ELEMENT ELEMENTO	ELEMENT ELEMENTO
3	3796026M8	1 [ABC]	**1**	DISTRIBUTOR	DISTRIBUTEUR DISTRIBUTORE	SAERAEDER DISTRIBUIDOR
4	3796027M8	1 [AB]	**4**	DISTRIBUTOR	DISTRIBUTEUR DISTRIBUTORE	SAERAEDER DISTRIBUIDOR
5	3796179M2	1 [D]	**1**	CONTROL VALVE	SOUPAPE COMMANDE VALVOLA COMANDO	STEUERVENTIL VALVULA CONTROL
6	F117961030010	5	**1**	KIT, JOINT	JEU JOINTS KIT GIUNTO	DICHTUNGSSATZ JUEGO JUNTAS
7	F716961030040	5	**2**	COIL	BOBINE BOBINA	SPULE BOBINA
8	3796028M2	1 👁 70-220 No 1	**1**	ELEMENT	ELEMENT ELEMENTO	ELEMENT ELEMENTO
9	3799725M1	1 M8 X 346	**3**	STUD	GOUJON SPINOTTO FILETT.	STEHBOLZEN ESPARRAGO ROSCA.
10	3011736X1	1 M8	**3**	NUT	ECROU DADO	MUTTER TUERCA

[A] DISTRIBUTOR WITH ELECTRIC CONTROL
DISTRIBUTEUR AVEC COMMANDE ELECTRIQUE
VERTEILER MIT ELEKTRISCHE SCHALTUNG
DISTRIBUTORE CON COMANDO ELECTRICO
DISTRIBUIDOR CON MANDO ELECTRICO

[B] DIST 4 POSITIONS,FLOW ADJUST,DOUBLE ACTION,ZERO LE AK
DIST 4 POSITIONS,DEBIT REGLABLE,DOUBLE EFFET,FUITE ZERO
VERTEILER 4 POSITIONEN,DURCH.EINSTELLUNG,DOPPELTWI RKENDSPERRVENTIL FUER NULLECKAGE
DIST A 4 POSIZIONI,REGOLATORE DI FLUSSO,DOPPIOEFFE ETTO,ZERO FUGA
DIST A 4 POSICION,DEBITO REGULABLE,DOBLE EFECTO,ZE RO FUGA

[C] WITH TIGHTENESS BALLS
AVEC ETANCHEITE A BILLES
MIT DICHTIGKEIT KUGEL
CON IMPERMEABILITA A SFERAS
CON IMPERMEABILIDAD A BOLAS

[D] HYDRAULIC LIFT VALVE
VALVE HYDRAULIQUE DE RELEVAGE
HYDR. HUBVENTIL
DISTRIBUTORE SOLLEVATORE
VALVULA DE LEVANTE HIDRAULICO

[E] ORDER DETAIL
COMMANDER DETAIL
BESTELLE EINZELN
ORDINARE AL MINUTO
PEDIR DETALLE

Auxiliary Distributor
Distributeur Auxiliaire
Zuzatzverteiler
Distributore Auxiliarie
Distribuidor Auxiliar

70-210

6 Distributors Electrodynamique
6 Distributeurs Electro-Hydraulique
6 Verteilers Elektrodynamischer
6 Distributors Elettroidraulico
6 Distribuidors Electro-Hidraulico

1-WP34-041-C

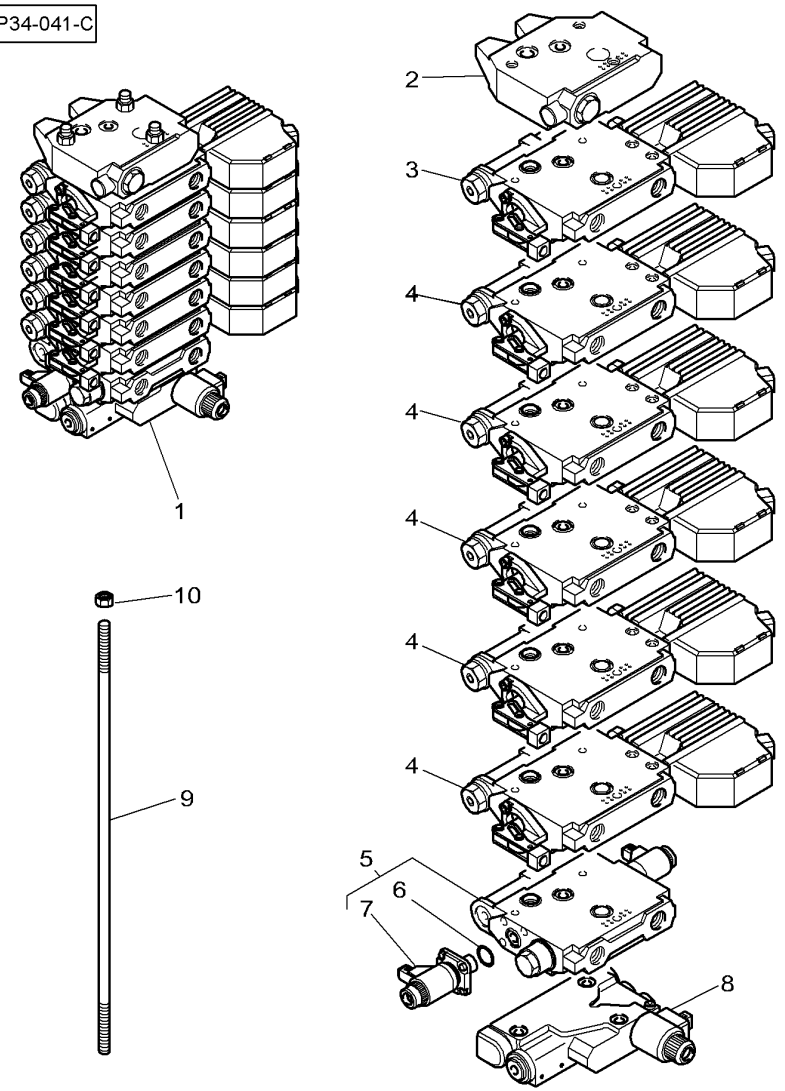

1		[E]	**1**	DISTRIBUTOR	DISTRIBUTEUR DISTRIBUTORE	SAERAEDER DISTRIBUIDOR
2	3796110M1	1	**1**	ELEMENT	ELEMENT ELEMENTO	ELEMENT ELEMENTO
3	3796026M8	1 [ABC]	**1**	DISTRIBUTOR	DISTRIBUTEUR DISTRIBUTORE	SAERAEDER DISTRIBUIDOR
4	3796027M8	1 [AB]	**5**	DISTRIBUTOR	DISTRIBUTEUR DISTRIBUTORE	SAERAEDER DISTRIBUIDOR
5	3796179M2	1 [D]	**1**	CONTROL VALVE	SOUPAPE COMMANDE VALVOLA COMANDO	STEUERVENTIL VALVULA CONTROL
6	F117961030010	5	**1**	KIT, JOINT	JEU JOINTS KIT GIUNTO	DICHTUNGSSATZ JUEGO JUNTAS
7	F716961030040	5	**2**	COIL	BOBINE BOBINA	SPULE BOBINA
8	3796028M2	1 👁 70-220 No 1	**1**	ELEMENT	ELEMENT ELEMENTO	ELEMENT ELEMENTO
9	3799466M1	1 M8 X 386	**3**	STUD	GOUJON SPINOTTO FILETT.	STEHBOLZEN ESPARRAGO ROSCA.
10	3011736X1	1 M8	**3**	NUT	ECROU DADO	MUTTER TUERCA

[A] DISTRIBUTOR WITH ELECTRIC CONTROL
DISTRIBUTEUR AVEC COMMANDE ELECTRIQUE
VERTEILER MIT ELEKTRISCHE SCHALTUNG
DISTRIBUTORE CON COMANDO ELECTRICO
DISTRIBUIDOR CON MANDO ELECTRICO

[B] DIST 4 POSITIONS,FLOW ADJUST,DOUBLE ACTION,ZERO LE AK
DIST 4 POSITIONS,DEBIT REGLABLE,DOUBLE EFFET,FUITE ZERO
VERTEILER 4 POSITIONEN,DURCH.EINSTELLUNG,DOPPELTWI RKENDSPERRVENTIL FUER NULLECKAGE
DIST A 4 POSIZIONI,REGOLATORE DI FLUSSO,DOPPIOEFFE ETTO,ZERO FUGA
DIST A 4 POSICION,DEBITO REGULABLE,DOBLE EFECTO,ZE RO FUGA

[C] WITH TIGHTENESS BALLS
AVEC ETANCHEITE A BILLES
MIT DICHTIGKEIT KUGEL
CON IMPERMEABILITA A SFERAS
CON IMPERMEABILIDAD A BOLAS

[D] HYDRAULIC LIFT VALVE
VALVE HYDRAULIQUE DE RELEVAGE
HYDR. HUBVENTIL
DISTRIBUTORE SOLLEVATORE
VALVULA DE LEVANTE HIDRAULICO

[E] ORDER DETAIL
COMMANDER DETAIL
BESTELLE EINZELN
ORDINARE AL MINUTO
PEDIR DETALLE

Auxiliary Distributor
Distributeur Auxiliaire
Zuzatzverteiler
Distributore Auxiliarie
Distributidor Auxiliar

70-215

1-WP34-027-A

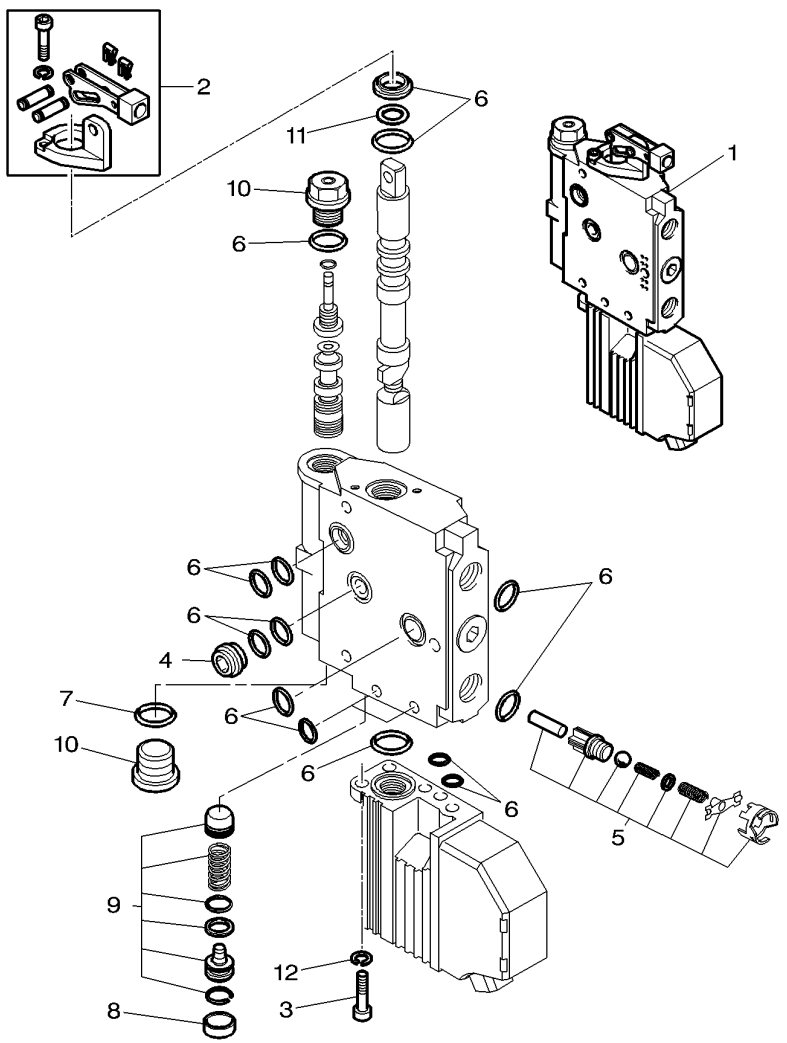

1	3796026M8	[AB]	**1**	DISTRIBUTOR	DISTRIBUTEUR DISTRIBUTORE	SAERAEDER DISTRIBUIDOR
1	3796027M8	[A]	**1**	DISTRIBUTOR	DISTRIBUTEUR DISTRIBUTORE	SAERAEDER DISTRIBUIDOR
2	3797284M1	1	**1**	DRIVE	COMMANDE PRESA DI MOTO	ANTRIEB TRASMISION
3	3009281X1	1 M6 X 16	**3**	SCREW	VIS VITE	SCHRAUBE TORNILLO
4	3108248M1	1	**1**	BYPASS	BYPASS BIPASSO	LECKOELLEITUNG DERIVACION
5	3903864M91	1	**1**	PARTS PACK	JEU PIECES PACCO RICAMBI	SATZ TEILE PAQUETE PIEZAS
6	3903869M92	1	**1**	KIT,JOINT/GASKET	JEU DE JOINTS KIT GUARN/GIUNTO	DICHTUNGS-SATZ JGO.JUNTAS/EMPAQ
7	3108243M1	1	**1**	WASHER	RONDELLE RONDELLA	SCHEIBE ARANDELA
8	3903856M1	1	**1**	PLUG	BOUCHON TAPPO	STOPFEN TAPON
9	F916961022160	1	**1**	PARTS PACK	JEU PIECES PACCO RICAMBI	SATZ TEILE PAQUETE PIEZAS
10	3108244M1	1	**2**	PLUG	BOUCHON TAPPO	STOPFEN TAPON
11	3904668M1	1	**1**	WASHER	RONDELLE RONDELLA	SCHEIBE ARANDELA
12	391130X1	1	**3**	LOCK WASHER	RONDELLE FREIN RONDELLA ARRESTO	SICHERUNGSRING ARANDELA SEGURID

[A] DIST 4 POSITIONS,FLOW ADJUST,DOUBLE ACTION,ZERO LE AK
DIST 4 POSITIONS,DEBIT REGLABLE,DOUBLE EFFET,FUITE ZERO
VERTEILER 4 POSITIONEN,DURCH.EINSTELLUNG,DOPPELTWI RKENDSPERRVENTIL FUER NULLECKAGE
DIST A 4 POSIZIONI,REGOLATORE DI FLUSSO,DOPPIOEFFE ETTO,ZERO FUGA
DIST A 4 POSICION,DEBITO REGULABLE,DOBLE EFECTO,ZE RO FUGA

[B] WITH TIGHTENESS BALLS
AVEC ETANCHEITE A BILLES
MIT DICHTIGKEIT KUGEL
CON IMPERMEABILITA A SFERAS
CON IMPERMEABILIDAD A BOLAS

Auxiliary Distributor
Distributeur Auxiliaire
Zuzatzverteiler
Distributore Auxiliarie
Distribuidor Auxiliar

70-220

1-WP34-033-A

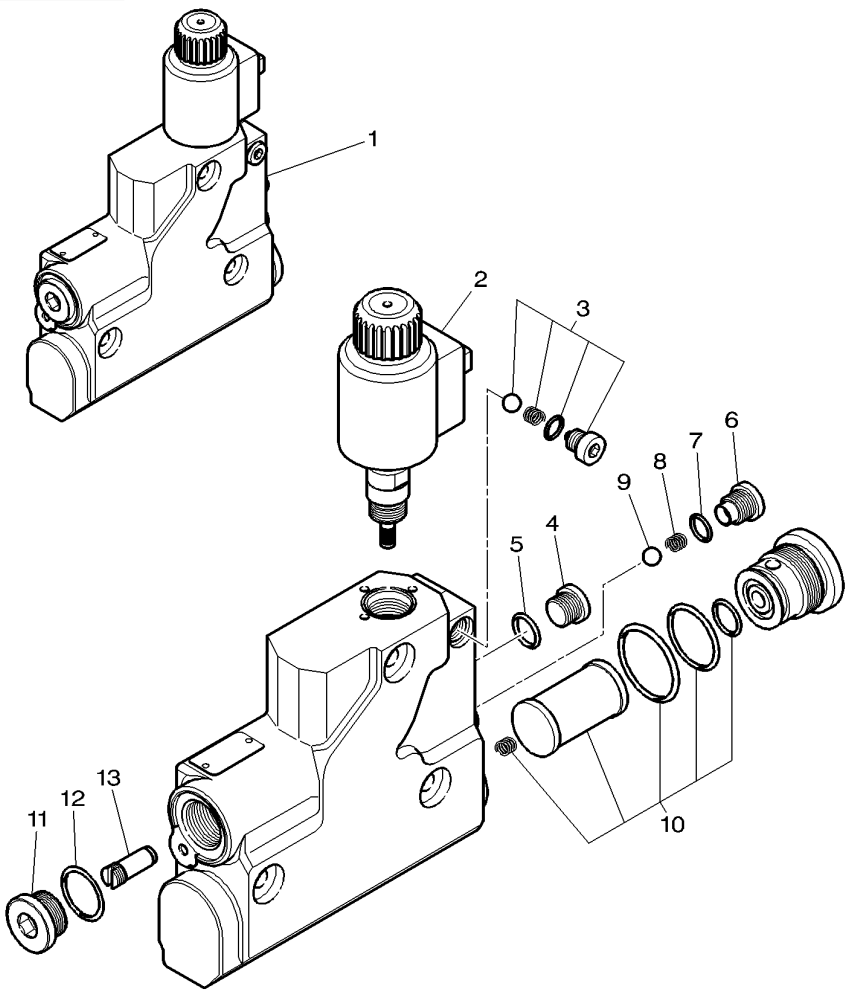

1	3796028M2			**1**	ELEMENT	ELEMENT ELEMENTO
2	**3903960M1**	1		**1**	ELECTROVALVE	ELECTROVANNE ELETTROVALVOLA
3	3907341M91	1		**1**	PARTS PACK	JEU PIECES PACCO RICAMBI
4	3903216M1	1		**1**	PLUG	BOUCHON TAPPO
5*	F916961020190	1		**1**	O RING	JOINT TORIQUE GIUNTO DI TENUTA
6	3907342M1	1		**1**	PLUG	BOUCHON TAPPO
7*	F916961020190	1		**1**	O RING	JOINT TORIQUE GIUNTO DI TENUTA
8	3907344M1	1		**1**	SPRING	RESSORT MOLLA
9		1	∅ 8 mm REF. 3	**1**	BALL	BILLE SFERA
10	3907340M91	1		**1**	FILTER	FILTRE FILTRO
11	3108244M1	1		**1**	PLUG	BOUCHON TAPPO
12*	F916961020160	1		**1**	O RING	JOINT TORIQUE GIUNTO DI TENUTA
13	**G001990100010**	1		**1**	KIT, FILTER	JEU FILTRE KIT FILTRO

					ELEMENT	ELEMENT ELEMENTO
					ELECTROVALVE	ELECTRON.VENTIL ELECTROVALVULA
					PARTS PACK	SATZ TEILE PAQUETE PIEZAS
					PLUG	STOPFEN TAPON
					O RING	O-RING JUNTA TOROIDAL
					PLUG	STOPFEN TAPON
					O RING	O-RING JUNTA TOROIDAL
					SPRING	FEDER MUELLE
					BALL	KUGEL BOLA
					FILTER	FILTER FILTRO
					PLUG	STOPFEN TAPON
					O RING	O-RING JUNTA TOROIDAL
					KIT, FILTER	FILTERSATZ JUEGO FILTRO

Hydraulic Coupling
Coupleur Hydraulique
Hydr. - Kupplung
Giunto Idraulico
Acoplador Hidraulico

70-225

4 Distributors Electrodynamique
4 Distributeurs Electro-Hydraulique
4 Verteilers Elektrodynamischer
4 Distributors Elettroidraulico
4 Distribuidors Electro-Hidraulico

PLANCHES EN COURS D'ILLUSTRATION

1	4277183M1		1	SUPPORT	SUPPORT SOPPORTO	TRAGER SOPORTE
2	3001317X1		1	UNION	RACCORD RACCORDO	VERSCHRAUBUNG RACOR
3	4281990M1		1	UNION	RACCORD RACCORDO	VERSCHRAUBUNG RACOR
4	3011146X1	3	1	O RING	JOINT TORIQUE GIUNTO DI TENUTA	O-RING JUNTA TOROIDAL
5	3011145X1	3	1	O RING	JOINT TORIQUE GIUNTO DI TENUTA	O-RING JUNTA TOROIDAL
6	3011404X91		2	UNION	RACCORD RACCORDO	VERSCHRAUBUNG RACOR
7	4282163M1		1	DECAL	DECALCOMANIE DECALCOMANIA	AUFKLEBER CALCOMANIA
8	3011138X91		2	TAP	OBTURATEUR. TAPPO*	HAHN GRIFO
9	3011148X1	8	1	O RING	JOINT TORIQUE GIUNTO DI TENUTA	O-RING JUNTA TOROIDAL
10	3011120X1		2	NUT	ECROU DADO	MUTTER TUERCA
11	3005908X1		6	CAP NUT	ECROU BORGNE DADO A CAPPELLO	HUTMUTTER TUERCA DE TAPA
12	390972X1		6	FLAT WASHER	RONDELLE PLATE RONDELLE PIANA	UNTERLEGSCHEIBEN ARANDELA PLANA
13	4275557M1	M8 X 175MM	6	STEM	TIGE ASTA DEL ZAPETTA	MESSERSTIEL VASTAGO
14	339228X1	M8 X 12	2	HEX. SOCK. SCREW	VIS TETE HEX VITE PARKER	ZYLINDERSCHRAUBE TORN.CAB.HUECA
15*	4274562M3		1	SUPPORT	SUPPORT SOPPORTO	TRAGER SOPORTE
16	3792734M1		2	PLATE	PLAQUE PIASTRA	PLATTE PLATO
17	3796260M2	70-240 No 1	4	FEMALE COUPLER	COUPLEUR FEMELLE GIUNTO FEMMINA	KUPPLST.AUSSEN ACOPLADOR HEMBRA
18	3007432X1		12	O RING	JOINT TORIQUE GIUNTO DI TENUTA	O-RING JUNTA TOROIDAL
19	4274829M2		2	SUPPORT	SUPPORT SOPPORTO	TRAGER SOPORTE
20	3009285X1	M8 X 16	6	SCREW	VIS VITE	SCHRAUBE TORNILLO
21	4278264M1		1	SUPPORT	SUPPORT SOPPORTO	TRAGER SOPORTE
22	822100070411		1	GASKET	JOINT GIUNTO PIANO	FLACHDICHTUNG JUNTA PLANA
23	3009491X1	M10 X 20	2	HEX. SOCK. SCREW	VIS TETE HEX VITE PARKER	ZYLINDERSCHRAUBE TORN.CAB.HUECA
24	4274977M1		2	SPACER	ENTRETOISE DISTANZIALE	ABSTANDSTUECK DISCO ESPACIADOR
25	4278265M1		1	SUPPORT	SUPPORT SOPPORTO	TRAGER SOPORTE
26	339124X1	M8 X 16	2	HEX. SOCK. SCREW	VIS TETE HEX VITE PARKER	ZYLINDERSCHRAUBE TORN.CAB.HUECA

Hydraulic Coupling
Coupleur Hydraulique
Hydr. - Kupplung
Giunto Idraulico
Acoplador Hidraulico

70-225

4 Distributors Electrodynamique
4 Distributeurs Electro-Hydraulique
4 Verteilers Elektrodynamischer
4 Distributors Elettroidraulico
4 Distribuidors Electro-Hidraulico

PLANCHES EN COURS D'ILLUSTRATION

27	391074X1	M6 X 12	**4**	HEX. SOCK. SCREW	VIS TETE HEX VITE PARKER	ZYLINDERSCHRAUBE TORN.CAB.HUECA
28	390974X1		**2**	FLAT WASHER	RONDELLE PLATE RONDELLE PIANA	UNTERLEGSCHEIBEN ARANDELA PLANA
29	4276649M1		**2**	STEM	TIGE ASTA DEL ZAPETTA	MESSERSTIEL VASTAGO
30	3011390X1		**2**	NUT	ECROU DADO	MUTTER TUERCA
31	390971X1		**4**	FLAT WASHER	RONDELLE PLATE RONDELLE PIANA	UNTERLEGSCHEIBEN ARANDELA PLANA
32	339230X1	M6 X 10	**4**	HEX. SOCK. SCREW	VIS TETE HEX VITE PARKER	ZYLINDERSCHRAUBE TORN.CAB.HUECA
33	4275580M1		**2**	SUPPORT	SUPPORT SOPPORTO	TRAGER SOPORTE
34	1442332X91		**1**	UNION	RACCORD RACCORDO	VERSCHRAUBUNG RACOR
35	4277192M1		**1**	TUBE	TUBE TUBO.	ROHR TUBO.
36	3009494X1	M10 X 35	**2**	HEX. SOCK. SCREW	VIS TETE HEX VITE PARKER	ZYLINDERSCHRAUBE TORN.CAB.HUECA
37	1441932X1	M10	**2**	NUT METRIC	ECROU METRIQUE DADO METRICO	MUTTER METRISCH TUERCA METRICO
38	3011534X91	M22	**8**	UNION	RACCORD RACCORDO	VERSCHRAUBUNG RACOR
39	3019398X1	38	**1**	O RING	JOINT TORIQUE GIUNTO DI TENUTA	O-RING JUNTA TOROIDAL
40	391990X1	M8 X 25	**2**	SCREW	VIS VITE	SCHRAUBE TORNILLO
41	3011084X91		**1**	UNION	RACCORD RACCORDO	VERSCHRAUBUNG RACOR
42	3011146X1	41	**1**	O RING	JOINT TORIQUE GIUNTO DI TENUTA	O-RING JUNTA TOROIDAL

Hydraulic Coupling
Coupleur Hydraulique
Hydr. - Kupplung
Giunto Idraulico
Acoplador Hidraulico

70-230

5 Distributors Electrodynamique
5 Distributeurs Electro-Hydraulique
5 Verteilers Elektrodynamischer
5 Distributors Elettroidraulico
5 Distribuidors Electro-Hidraulico

PLANCHES EN COURS D'ILLUSTRATION

1	4277182M1		**1**	SUPPORT	SUPPORT SOPPORTO	TRAGER SOPORTE
2	3001317X1		**1**	UNION	RACCORD RACCORDO	VERSCHRAUBUNG RACOR
3	4281990M1		**1**	UNION	RACCORD RACCORDO	VERSCHRAUBUNG RACOR
4	3011146X1	3	**1**	O RING	JOINT TORIQUE GIUNTO DI TENUTA	O-RING JUNTA TOROIDAL
5	3011145X1	3	**1**	O RING	JOINT TORIQUE GIUNTO DI TENUTA	O-RING JUNTA TOROIDAL
6	3011404X91		**2**	UNION	RACCORD RACCORDO	VERSCHRAUBUNG RACOR
7	4282163M1		**1**	DECAL	DECALCOMANIE DECALCOMANIA	AUFKLEBER CALCOMANIA
8	3011138X91		**2**	TAP	OBTURATEUR. TAPPO*	HAHN GRIFO
9	3011148X1	8	**1**	O RING	JOINT TORIQUE GIUNTO DI TENUTA	O-RING JUNTA TOROIDAL
10	3011120X1		**2**	NUT	ECROU DADO	MUTTER TUERCA
11	3005908X1		**6**	CAP NUT	ECROU BORGNE DADO A CAPPELLO	HUTMUTTER TUERCA DE TAPA
12	390972X1		**6**	FLAT WASHER	RONDELLE PLATE RONDELLE PIANA	UNTERLEGSCHEIBEN ARANDELA PLANA
13	4275556M1	M8 X 245	**3**	STEM	TIGE ASTA DEL ZAPETTA	MESSERSTIEL VASTAGO
14	339228X1	M8 X 12	**2**	HEX. SOCK. SCREW	VIS TETE HEX VITE PARKER	ZYLINDERSCHRAUBE TORN.CAB.HUECA
15*	4274562M3		**1**	SUPPORT	SUPPORT SOPPORTO	TRAGER SOPORTE
16	3792734M1		**2**	PLATE	PLAQUE PIASTRA	PLATTE PLATO
17	3796260M2	70-240 No 1	**5**	FEMALE COUPLER	COUPLEUR FEMELLE GIUNTO FEMMINA	KUPPLST.AUSSEN ACOPLADOR HEMBRA
18	3007432X1		**14**	O RING	JOINT TORIQUE GIUNTO DI TENUTA	O-RING JUNTA TOROIDAL
19	4274829M2		**2**	SUPPORT	SUPPORT SOPPORTO	TRAGER SOPORTE
20	3009285X1	M8 X 16	**6**	SCREW	VIS VITE	SCHRAUBE TORNILLO
21	4278264M1		**1**	SUPPORT	SUPPORT SOPPORTO	TRAGER SOPORTE
22	822100070411		**1**	GASKET	JOINT GIUNTO PIANO	FLACHDICHTUNG JUNTA PLANA
23	3009491X1	M10 X 20	**2**	HEX. SOCK. SCREW	VIS TETE HEX VITE PARKER	ZYLINDERSCHRAUBE TORN.CAB.HUECA
24	4274977M1		**2**	SPACER	ENTRETOISE DISTANZIALE	ABSTANDSTUECK DISCO ESPACIADOR
25	4278265M1		**1**	SUPPORT	SUPPORT SOPPORTO	TRAGER SOPORTE
26	339124X1	M8 X 16	**2**	HEX. SOCK. SCREW	VIS TETE HEX VITE PARKER	ZYLINDERSCHRAUBE TORN.CAB.HUECA

Hydraulic Coupling
Coupleur Hydraulique
Hydr. - Kupplung
Giunto Idraulico
Acoplador Hidraulico

70-230

5 Distributors Electrodynamique
5 Distributeurs Electro-Hydraulique
5 Verteilers Elektrodynamischer
5 Distributors Elettroidraulico
5 Distribuidors Electro-Hidraulico

PLANCHES EN COURS D'ILLUSTRATION

27	391074X1	M6 X 12	**4**	HEX. SOCK. SCREW	VIS TETE HEX VITE PARKER	ZYLINDERSCHRAUBE TORN.CAB.HUECA
28	390974X1		**2**	FLAT WASHER	RONDELLE PLATE RONDELLE PIANA	UNTERLEGSCHEIBEN ARANDELA PLANA
29	4276649M1		**2**	STEM	TIGE ASTA DEL ZAPETTA	MESSERSTIEL VASTAGO
30	3011390X1		**2**	NUT	ECROU DADO	MUTTER TUERCA
31	390971X1		**4**	FLAT WASHER	RONDELLE PLATE RONDELLE PIANA	UNTERLEGSCHEIBEN ARANDELA PLANA
32	339230X1	M6 X 10	**4**	HEX. SOCK. SCREW	VIS TETE HEX VITE PARKER	ZYLINDERSCHRAUBE TORN.CAB.HUECA
33	4275580M1		**2**	SUPPORT	SUPPORT SOPPORTO	TRAGER SOPORTE
34	1442332X91		**1**	UNION	RACCORD RACCORDO	VERSCHRAUBUNG RACOR
35	4275557M1	M8 X 175MM	**3**	STEM	TIGE ASTA DEL ZAPETTA	MESSERSTIEL VASTAGO
36	3009494X1	M10 X 35	**2**	HEX. SOCK. SCREW	VIS TETE HEX VITE PARKER	ZYLINDERSCHRAUBE TORN.CAB.HUECA
37	1441932X1	M10	**2**	NUT METRIC	ECROU METRIQUE DADO METRICO	MUTTER METRISCH TUERCA METRICO
38	3011534X91	M22	**10**	UNION	RACCORD RACCORDO	VERSCHRAUBUNG RACOR
39	3019398X1	38	**1**	O RING	JOINT TORIQUE GIUNTO DI TENUTA	O-RING JUNTA TOROIDAL
40	391990X1	M8 X 25	**2**	SCREW	VIS VITE	SCHRAUBE TORNILLO
41	3011084X91		**1**	UNION	RACCORD RACCORDO	VERSCHRAUBUNG RACOR
42	3011146X1	41	**1**	O RING	JOINT TORIQUE GIUNTO DI TENUTA	O-RING JUNTA TOROIDAL
43	4277192M1		**1**	TUBE	TUBE TUBO.	ROHR TUBO.

Hydraulic Coupling
Coupleur Hydraulique
Hydr. - Kupplung
Giunto Idraulico
Acoplador Hidraulico

70-235

6 Distributors Electrodynamique
6 Distributeurs Electro-Hydraulique
6 Verteilers Elektrodynamischer
6 Distributors Elettroidraulico
6 Distribuidors Electro-Hidraulico

PLANCHES EN COURS D'ILLUSTRATION

1	4276643M1		**1**	SUPPORT	SUPPORT SOPPORTO	TRAGER SOPORTE
2	3001317X1		**1**	UNION	RACCORD RACCORDO	VERSCHRAUBUNG RACOR
3	4281990M1		**1**	UNION	RACCORD RACCORDO	VERSCHRAUBUNG RACOR
4	3011146X1	3 ∅ 9 X 1.5	**1**	O RING	JOINT TORIQUE GIUNTO DI TENUTA	O-RING JUNTA TOROIDAL
5	3011145X1	3 ∅ 7.5 X 1.5	**1**	O RING	JOINT TORIQUE GIUNTO DI TENUTA	O-RING JUNTA TOROIDAL
6	3011404X91		**2**	UNION	RACCORD RACCORDO	VERSCHRAUBUNG RACOR
7	4282163M1		**1**	DECAL	DECALCOMANIE DECALCOMANIA	AUFKLEBER CALCOMANIA
8	3011138X91		**2**	TAP	OBTURATEUR. TAPPO*	HAHN GRIFO
9	3011148X1	8	**1**	O RING	JOINT TORIQUE GIUNTO DI TENUTA	O-RING JUNTA TOROIDAL
10	3011120X1		**2**	NUT	ECROU DADO	MUTTER TUERCA
11	3005908X1		**6**	CAP NUT	ECROU BORGNE DADO A CAPPELLO	HUTMUTTER TUERCA DE TAPA
12	390972X1		**6**	FLAT WASHER	RONDELLE PLATE RONDELLE PIANA	UNTERLEGSCHEIBEN ARANDELA PLANA
13	4275556M1	M8 X 245	**6**	STEM	TIGE ASTA DEL ZAPETTA	MESSERSTIEL VASTAGO
14	339228X1	M8 X 12	**2**	HEX. SOCK. SCREW	VIS TETE HEX VITE PARKER	ZYLINDERSCHRAUBE TORN.CAB.HUECA
15*	4274562M3		**1**	SUPPORT	SUPPORT SOPPORTO	TRAGER SOPORTE
16	3792734M1		**2**	PLATE	PLAQUE PIASTRA	PLATTE PLATO
17	3796260M2	👁 70-240 No 1	**6**	FEMALE COUPLER	COUPLEUR FEMELLE GIUNTO FEMMINA	KUPPLST.AUSSEN ACOPLADOR HEMBRA
18	3007432X1		**16**	O RING	JOINT TORIQUE GIUNTO DI TENUTA	O-RING JUNTA TOROIDAL
19	4274829M2		**2**	SUPPORT	SUPPORT SOPPORTO	TRAGER SOPORTE
20	3009285X1	M8 X 16	**6**	SCREW	VIS VITE	SCHRAUBE TORNILLO
21	4278264M1		**1**	SUPPORT	SUPPORT SOPPORTO	TRAGER SOPORTE
22	822100070411		**1**	GASKET	JOINT GIUNTO PIANO	FLACHDICHTUNG JUNTA PLANA
23	3009491X1	M10 X 20	**2**	HEX. SOCK. SCREW	VIS TETE HEX VITE PARKER	ZYLINDERSCHRAUBE TORN.CAB.HUECA
24	4274977M1		**2**	SPACER	ENTRETOISE DISTANZIALE	ABSTANDSTUECK DISCO ESPACIADOR
25	4278265M1		**1**	SUPPORT	SUPPORT SOPPORTO	TRAGER SOPORTE
26	339124X1	M8 X 16	**2**	HEX. SOCK. SCREW	VIS TETE HEX VITE PARKER	ZYLINDERSCHRAUBE TORN.CAB.HUECA

Hydraulic Coupling
Coupleur Hydraulique
Hydr. - Kupplung
Giunto Idraulico
Acoplador Hidraulico

70-235

6 Distributors Electrodynamique
6 Distributeurs Electro-Hydraulique
6 Verteilers Elektrodynamischer
6 Distributors Elettroidraulico
6 Distribuidors Electro-Hidraulico

PLANCHES EN COURS D'ILLUSTRATION

27	391074X1	M6 X 12	**4**	HEX. SOCK. SCREW	VIS TETE HEX VITE PARKER	ZYLINDERSCHRAUBE TORN.CAB.HUECA
28	390974X1		**2**	FLAT WASHER	RONDELLE PLATE RONDELLE PIANA	UNTERLEGSCHEIBEN ARANDELA PLANA
29	4276649M1		**2**	STEM	TIGE ASTA DEL ZAPETTA	MESSERSTIEL VASTAGO
30	3011390X1		**2**	NUT	ECROU DADO	MUTTER TUERCA
31	390971X1		**4**	FLAT WASHER	RONDELLE PLATE RONDELLE PIANA	UNTERLEGSCHEIBEN ARANDELA PLANA
32	339230X1	M6 X 10	**4**	HEX. SOCK. SCREW	VIS TETE HEX VITE PARKER	ZYLINDERSCHRAUBE TORN.CAB.HUECA
33	4275580M1		**2**	SUPPORT	SUPPORT SOPPORTO	TRAGER SOPORTE
34	1442332X91		**1**	UNION	RACCORD RACCORDO	VERSCHRAUBUNG RACOR
35	4277192M1		**1**	TUBE	TUBE TUBO.	ROHR TUBO.
36	3009494X1	M10 X 35	**2**	HEX. SOCK. SCREW	VIS TETE HEX VITE PARKER	ZYLINDERSCHRAUBE TORN.CAB.HUECA
37	1441932X1	M10	**2**	NUT METRIC	ECROU METRIQUE DADO METRICO	MUTTER METRISCH TUERCA METRICO
38	3011534X91	M22	**12**	UNION	RACCORD RACCORDO	VERSCHRAUBUNG RACOR
39	3019398X1	38	**1**	O RING	JOINT TORIQUE GIUNTO DI TENUTA	O-RING JUNTA TOROIDAL
40	391990X1	M8 X 25	**2**	SCREW	VIS VITE	SCHRAUBE TORNILLO
41	3011084X91		**1**	UNION	RACCORD RACCORDO	VERSCHRAUBUNG RACOR
42	3011146X1	41	**1**	O RING	JOINT TORIQUE GIUNTO DI TENUTA	O-RING JUNTA TOROIDAL

Hydraulic Coupling
Coupleur Hydraulique
Hydr. - Kupplung
Giunto Idraulico
Acoplador Hidraulico

70-240

1-WP40-015-B

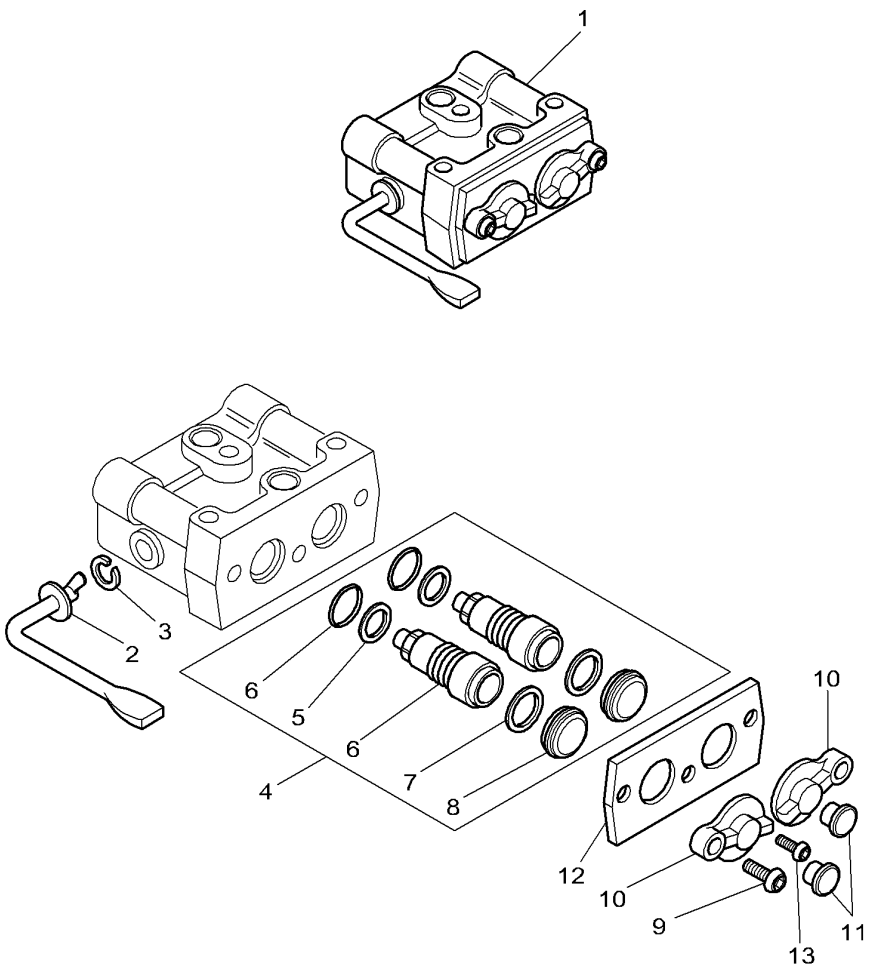

1	3796260M2			**1**	FEMALE COUPLER	COUPLEUR FEMELLE GIUNTO FEMMINA	KUPPLST.AUSSEN ACOPLADOR HEMBRA
2	3903463M91	1		**1**	LEVER	LEVIER LEVA	HEBEL PALANCA
3	3903462M1	1		**1**	CIRCLIP	CIRCLIP ANNELLO ELASTICO	SEEGERING GRAPA CIRCULAR
4	3903972M91	1		**1**	KIT, CARTRIDGE	JEU CARTOUCHES KIT CARTUCCIA	SATZ VENTILEINS JUEGO DE FILTROS
5	3903464M1	4		**2**	GASKET	JOINT GIUNTO PIANO	FLACHDICHTUNG JUNTA PLANA
6	3903465M1	4		**2**	GASKET	JOINT GIUNTO PIANO	FLACHDICHTUNG JUNTA PLANA
7	3903460M1	4		**2**	CLIP	PATTE D'ATTACHE FERMAGLIO	SCHELLE CLIP
8	3903459M1	4		**2**	SEAL	JOINT ETANCHEITE GIUNTO ROTONDO	DICHTRING JUNTA REDONDA
9	3903455M1	1		**2**	SCREW	VIS VITE	SCHRAUBE TORNILLO
10	3903456M1	1		**2**	TAP	OBTURATEUR. TAPPO*	HAHN GRIFO
11	3796263M1		[A]	**2**	PLUG	BOUCHON TAPPO	STOPFEN TAPON
11	3796264M1		[B]	**2**	PLUG	BOUCHON TAPPO	STOPFEN TAPON
11	3796262M1		[C]	**2**	PLUG	BOUCHON TAPPO	STOPFEN TAPON
11	3796261M1		[D]	**2**	PLUG	BOUCHON TAPPO	STOPFEN TAPON
11	4300879M1		[E]	**2**	PLUG	BOUCHON TAPPO	STOPFEN TAPON
11*	4300878M1		[F]	**2**	PLUG	BOUCHON TAPPO	STOPFEN TAPON
12	3903458M1	1		**1**	PLATE	PLAQUE PIASTRA	PLATTE PLATO
13	3903457M1	1		**1**	SCREW	VIS VITE	SCHRAUBE TORNILLO

[A] BLACK
NOIR
SCHWARZ
NERO
NEGRO

[B] RED
ROUGE
ROT
ROSSO
ROJO

[C] GREEN
VERT
GRUEN
VERDE
VERDE

Hydraulic Coupling
Coupleur Hydraulique
Hydr. - Kupplung
Giunto Idraulico
Acoplador Hidraulico

70-240

1-WP40-015-B

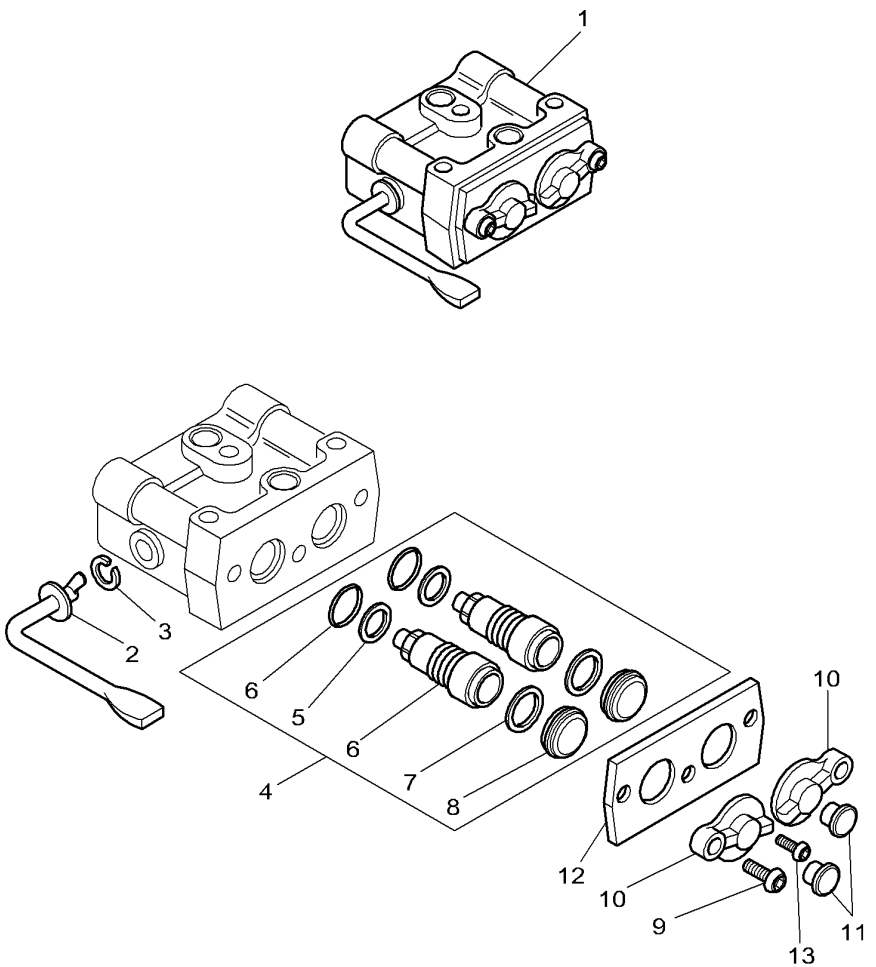

[D] YELLOW
JAUNE
GELB
GIALLO
AMARILLO

[E] BLUE
BLEU
BLAU
AZZURRO
AZUL

[F] BROWN
MARRON
BRAUN
MARRONE
MARON

Oil Recovery
Recuperation D'Huile
Olruckgewinnung
Recupero D'Olio
Recuperacion Del Aceite

70-245

1-WP41-019-C

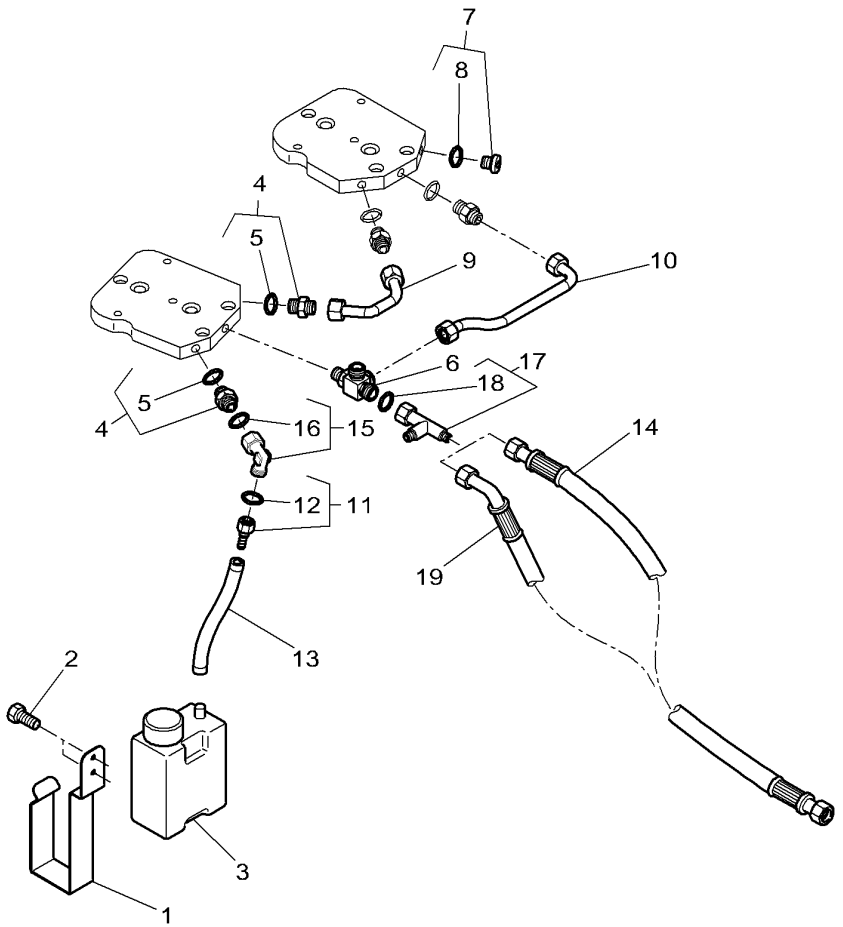

1	4274980M1		**1**	SUPPORT	SUPPORT SOPPORTO	TRAGER SOPORTE
2	390916X1	M6 X 8	**2**	HEX. SOCK. SCREW	VIS TETE HEX VITE PARKER	ZYLINDERSCHRAUBE TORN.CAB.HUECA
3*	4284633M1		**1**	CAN	BIDON BIDONE	KANNE BIDON
4	338795X91	M14	**4**	UNION	RACCORD RACCORDO	VERSCHRAUBUNG RACOR
5	338762X1	4	**1**	SEAL	JOINT ETANCHEITE GIUNTO ROTONDO	DICHTRING JUNTA REDONDA
6	4277193M1	M14	**1**	UNION	RACCORD RACCORDO	VERSCHRAUBUNG RACOR
7	3011099X91	M14X1,5	**1**	PLUG	BOUCHON TAPPO	STOPFEN TAPON
8	338762X1	7	**1**	SEAL	JOINT ETANCHEITE GIUNTO ROTONDO	DICHTRING JUNTA REDONDA
9	4274830M1		**1**	TUBE	TUBE TUBO.	ROHR TUBO.
10	4274831M2		**1**	TUBE	TUBE TUBO.	ROHR TUBO.
11	4274995M1		**1**	UNION	RACCORD RACCORDO	VERSCHRAUBUNG RACOR
12	1441121X1	11	**1**	O RING	JOINT TORIQUE GIUNTO DI TENUTA	O-RING JUNTA TOROIDAL
13	4276166M2	◄► 210 MM	**1**	HYDR. HOSE	FLEXIBLE TUBOFLEX IDRAUL	HYDR. SCHLAUCH TUBO HIDRAULICO
14	4276167M1	➡ R321048	**1**	HYDR. HOSE	FLEXIBLE TUBOFLEX IDRAUL	HYDR. SCHLAUCH TUBO HIDRAULICO
15	3011083X91	M16X1,5	**1**	UNION	RACCORD RACCORDO	VERSCHRAUBUNG RACOR
16	3011145X1	15	**1**	O RING	JOINT TORIQUE GIUNTO DI TENUTA	O-RING JUNTA TOROIDAL
17	3011289X91	➡ R285062	**1**	TEEPIECE	TE RACCORDO A T	T-STUECK PIEZA EN T
18	3011146X1	17	**1**	O RING	JOINT TORIQUE GIUNTO DI TENUTA	O-RING JUNTA TOROIDAL
19*	4276167M2	[A] ➡ R321049	**1**	HYDR. HOSE	FLEXIBLE TUBOFLEX IDRAUL	HYDR. SCHLAUCH TUBO HIDRAULICO

[A] VALID ALSO FOR TRACTOR R313045
VALABLE EGALEMENT POUR TRACTEUR R313045
GULTIG EBENFALLS FUR TRAKTOR R313045
VALIDO ANCHE PER TRATTORE R313045
VALIDO TAMBIEN PARA TRACTOR R313045

Control With 5-6 Distributors Electrodynamique	**Module Fingertip**	**70-250**
Commande Avec 5-6 Distributeurs Electro -Hydraulique	**Module Fingertip**	
Antrieb Mit 5-6 Verteilers Elektrodynamischer	**Model Fingertip**	
Comandi Con 5-6 Distributors Eletttro-Idraulico	**Modulo Fingertip**	
Mando Con 5-6 Distribuidors Electro-Hydraulico	**Modulo Fingertip**	

1-WP67-001-A

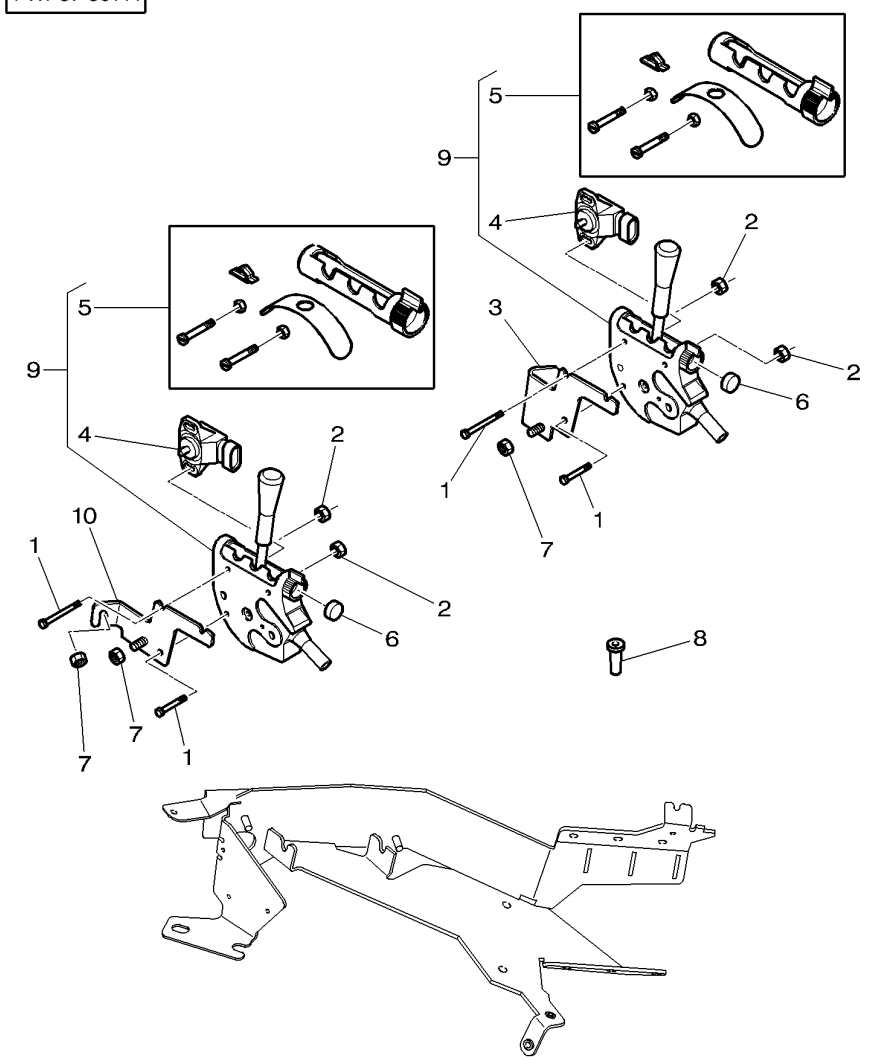

1	391244X1	M6 X 45	
2	1441500X1	M6	
3*	4270720M3		
4	**3797129M1**	9	
5	3907279M92	9	
6	4279537M2	[B]	
6	3787600M2	[A]	
7	394367X1	M8	
8	3787578M1		
9	3787595M92		
10*	4271369M3		

[A] BLUE
BLEU
BLAU
AZZURRO
AZUL

[B] BROWN
MARRON
BRAUN
MARRONE
MARON

3	HEX. SOCK. SCREW	VIS TETE HEX VITE PARKER	ZYLINDERSCHRAUBE TORN.CAB.HUECA
3	TOP LOCKNUT	ECROU AUTOFREINE DADO DI TESTA	SELBSTS.MUTTER CONTRATUERCA SUP
1	PLATE CLAMPING	PLATINE PIASTRA APPOGGIO	KLEMMPLATTE PLACA DE ABRAZO
1	POSITION SENSOR	CAPTEUR POSITION SENSORE DI POSIZ	SENSOR. SENSOR
1	PARTS PACK	JEU PIECES PACCO RICAMBI	SATZ TEILE PAQUETE PIEZAS
1	PADDING	PASTILLE IMBOTTITURA	ABFEDERUNG RELLENO
1	PADDING	PASTILLE IMBOTTITURA	ABFEDERUNG RELLENO
4	NUT	ECROU DADO	MUTTER TUERCA
4	PLUG	BOUCHON TAPPO	STOPFEN TAPON
X	WOBBLE DRIVE	BOITIER COMMANDE GUIDA OSCILLANTE	TAUMELANTRIEB MANDO OSCILANTE
1	PLATE CLAMPING	PLATINE PIASTRA APPOGGIO	KLEMMPLATTE PLACA DE ABRAZO

80

Instrument Panel & Instruments
Tableau De Bord & Instruments
Instrumentenbrett & Armaturen
Cruscotto & Strumenti
Tablero De Instrumentos & Indicapores

80-5

With Dot Matrix
Avec Dot Matrix
Mit Dot Matrix
Con Dot Matrix
Con Dot Matrix

1-WC15-001-D

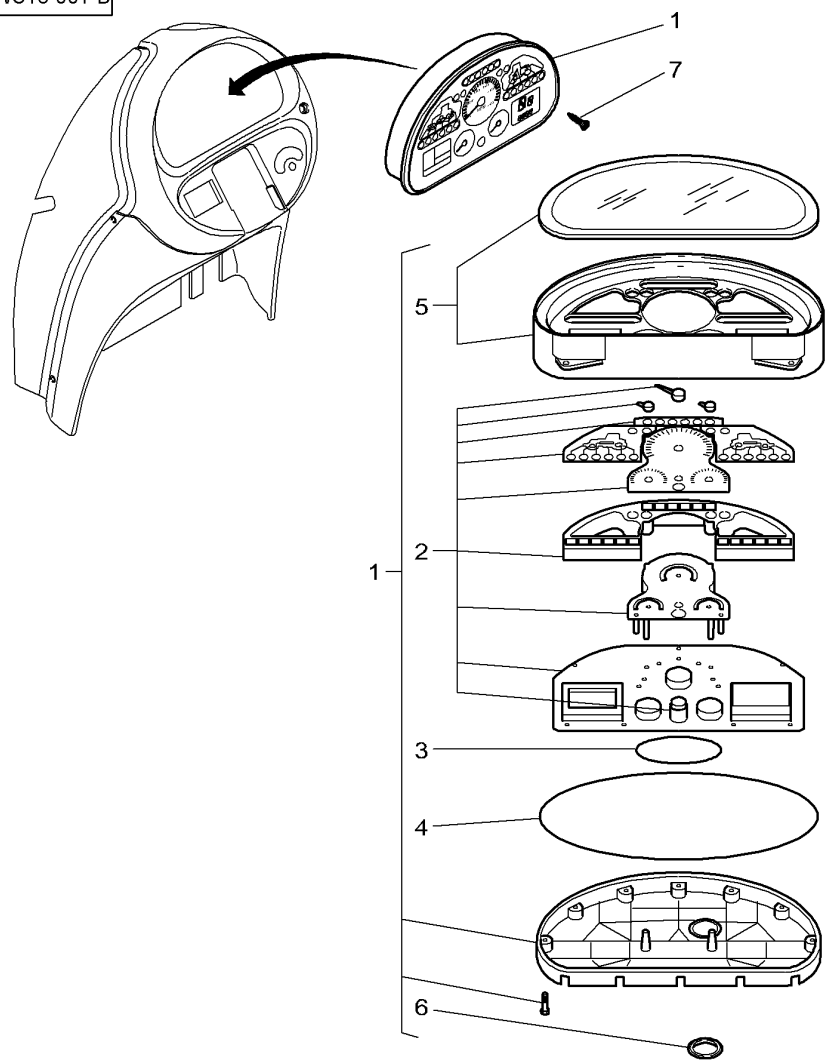

1	3787409M95		**1**	INSTRUMENT PANEL	TABLEAU DE BORD PANNELLO STRUMEN	ARMATURENBRETT PANEL INSTRUMENT
2		1 REF. 1	**1**	PRINTED CIRCUIT	CIRCUIT IMPRIME CIRCUITO STAMP.	GEDRUCKTESCHALTG CIRCUITO IMPRESO
3	3907246M1	1	**1**	GASKET	JOINT GIUNTO PIANO	FLACHDICHTUNG JUNTA PLANA
4	3907247M1	1	**1**	GASKET	JOINT GIUNTO PIANO	FLACHDICHTUNG JUNTA PLANA
5	3907532M91	1	**1**	PANEL	PANNEAU PANNELLO	WANDPLATTE PANEL
6*	3907255M1	1	**1**	HELMET	CAPUCHON CASCO	SCHUTZHELM CASCO
7	3010791X1	M4 X 20	**4**	SCREW	VIS VITE	SCHRAUBE TORNILLO

Electric Equipment & Instrument Panel
Equipement Electrique & Tableau De Bord
Elektr.-Anlage & Instrumentenbrett
Impianto Elettrico & Cruscotto
Equipo Electrico & Tablero De Instrumentos

80-10

1-WU21-001-B

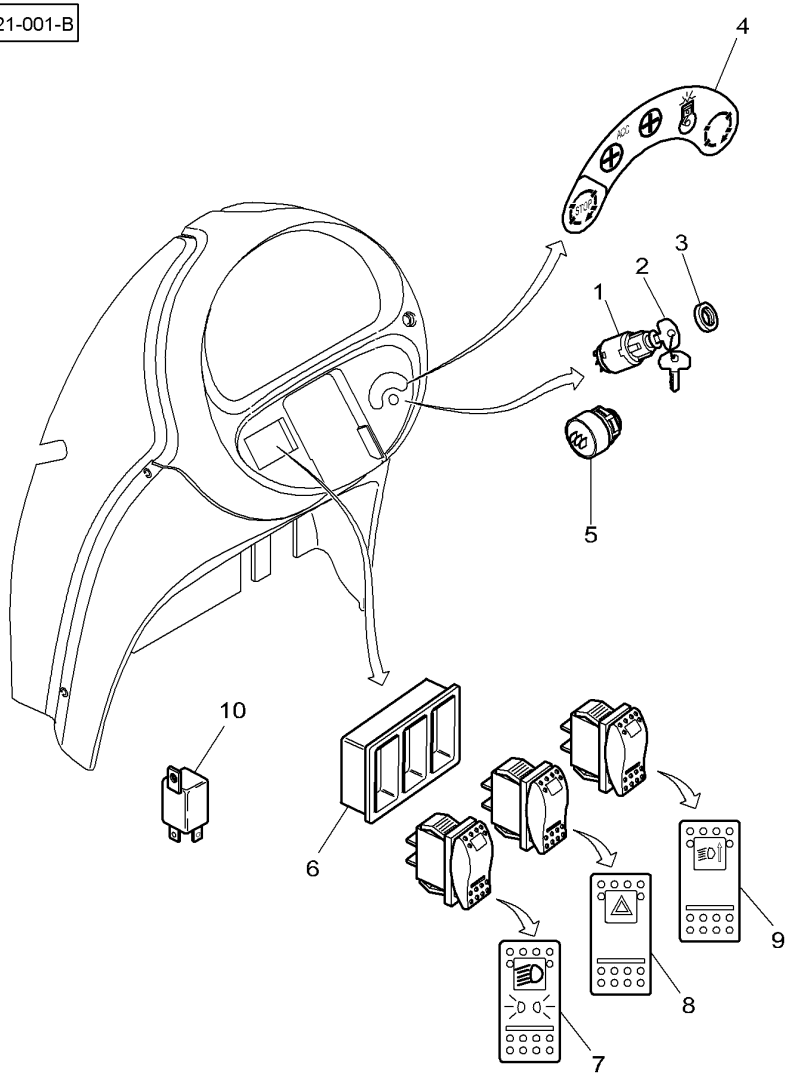

1	3779699M1		**1**	SWITCH,INDIRECT	CONTACTEUR INTERRUTTORE IND	KONTAKTSCHALTER CONTACTOR
2*	**4271358M1**		**1**	IGNITION KEY	CLE DE CONTACT CHIAVE CONTATTO	ZUENDSCHLUESSEL LLAVE CONTACTO
3	1694534M1		**1**	NUT	ECROU DADO	MUTTER TUERCA
4	4271558M1		**1**	DECAL	DECALCOMANIE DECALCOMANIA	AUFKLEBER CALCOMANIA
5	3713367M1		**1**	HORN	AVERTISSEUR AVVISATORE ACUST	HORN BOCINA
6	3809798M1		**1**	HOUSING	CARTER CARCASSA	GEHAEUSE ALOJAMIENTO
7	**4271342M1**		**1**	SWITCH,INDIRECT	CONTACTEUR INTERRUTTORE IND	KONTAKTSCHALTER CONTACTOR
8	**4271916M2**		**1**	SWITCH,INDIRECT	CONTACTEUR INTERRUTTORE IND	KONTAKTSCHALTER CONTACTOR
9*	**4271343M1**	VS	**1**	SWITCH,INDIRECT	CONTACTEUR INTERRUTTORE IND	KONTAKTSCHALTER CONTACTOR
10*	**4270844M1**	[B] 4RA 007 793 03 12 V	**1**	RELAY	RELAIS RELE	RELAIS RELE

[B] WITH SUSPENDED CAB
AVEC CABINE SUSPENDUE
MIT FEDERUNG KIBINE
CON CABINA SOSPESA
CON CABINA SUSPENDIDA

Side Console Switches
Interrupteurs Console Laterale
Seitenkonsole Schalter
Interrupttores De La Pannello Laterale
Interruptores Del Consola Lateral

80-15

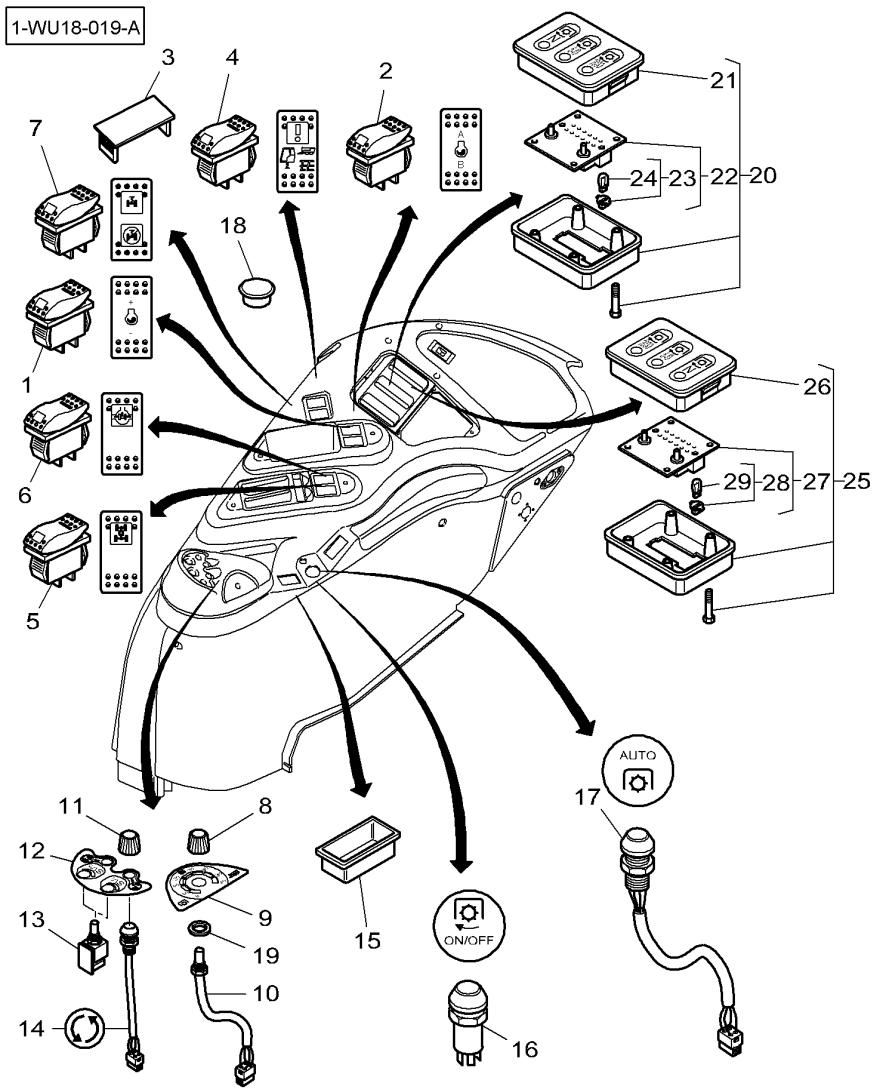

1	**4271346M1**	+/-	**1**	SWITCH,INDIRECT	CONTACTEUR INTERRUTTORE IND	KONTAKTSCHALTER CONTACTOR
2	**4271347M1**	A/B	**1**	SWITCH,INDIRECT	CONTACTEUR INTERRUTTORE IND	KONTAKTSCHALTER CONTACTOR
3	3713151M1		**X**	TAP	OBTURATEUR. TAPPO*	HAHN GRIFO
4	**4271351M2**		**1**	SWITCH,INDIRECT	CONTACTEUR INTERRUTTORE IND	KONTAKTSCHALTER CONTACTOR
5	**4271349M2**	⊢⊣	**1**	SWITCH,INDIRECT	CONTACTEUR INTERRUTTORE IND	KONTAKTSCHALTER CONTACTOR
6	**4271348M2**		**1**	SWITCH,INDIRECT	CONTACTEUR INTERRUTTORE IND	KONTAKTSCHALTER CONTACTOR
7	**4271350M1**		**1**	SWITCH,INDIRECT	CONTACTEUR INTERRUTTORE IND	KONTAKTSCHALTER CONTACTOR
8	4273261M1		**1**	BUTTON	BOUTON BOTTONE	KNOPFTASTE BOTON
9	4271338M2		**1**	DECAL	DECALCOMANIE DECALCOMANIA	AUFKLEBER CALCOMANIA
10	4270162M2		**1**	POTENTIOMETER	POTENTIOMETRE POTENZIOMETRO	POTENTIOMETER REGULADOR ELECT.
11	4273260M1		**2**	BUTTON	BOUTON BOTTONE	KNOPFTASTE BOTON
12	4271337M2		**1**	DECAL	DECALCOMANIE DECALCOMANIA	AUFKLEBER CALCOMANIA
13	3788160M2		**2**	METER	COMPTEUR METRO	MESSINSTRUMENT MEDIDOR
14*	4291979M1		**2**	SWITCH	INTERRUPTEUR INTERRUTTORE	SCHALTER INTERRUPTOR
15	4271925M1		**1**	SUPPORT	SUPPORT SOPPORTO	TRAGER SOPORTE
16	4284629M1		**1**	SWITCH,INDIRECT	CONTACTEUR INTERRUTTORE IND	KONTAKTSCHALTER CONTACTOR
17*	**4291981M1**		**1**	SWITCH,INDIRECT	CONTACTEUR INTERRUTTORE IND	KONTAKTSCHALTER CONTACTOR
18	3784237M1		**1**	PLUG	BOUCHON TAPPO	STOPFEN TAPON
19	3619096M1	∅ 10,5 X 32	**1**	WASHER	RONDELLE RONDELLA	SCHEIBE ARANDELA
20	4277367M2	750/1000 RPM	**1**	CONSOLE	CONSOLE CONSOLE	KONSOLE CONSOLA
21	3907423M91	20	**1**	CASE ASSY	BOITIER CARCASSA COMPLET	GEHAEUSE KPL CAJA COMPLETA
22		20 REF. 20	**1**	PRINTED CIRCUIT	CIRCUIT IMPRIME CIRCUITO STAMP.	GEDRUCKTESCHALTG CIRCUITO IMPRESO
23	3713385M1	22	**2**	LAMP SOCKET	PORTE LAMPE PORTA LAMPADA	LAMPENFASSUNG PORTA LAMPARA
24	**3405185M1**	23	**1**	BULB 12V 1.2W	AMPOULE 12V 1.2W BULBO 12V 1,2W	GLUEHL 12V 1.2W BOMBILLA 12V1,2W
25	4277366M2	540/1000 RPM	**1**	CONSOLE	CONSOLE CONSOLE	KONSOLE CONSOLA
26	3907422M91	25	**1**	CASE ASSY	BOITIER CARCASSA COMPLET	GEHAEUSE KPL CAJA COMPLETA

Side Console Switches
Interrupteurs Console Laterale
Seitenkonsole Schalter
Interrupttores De La Pannello Laterale
Interruptores Del Consola Lateral

80-15

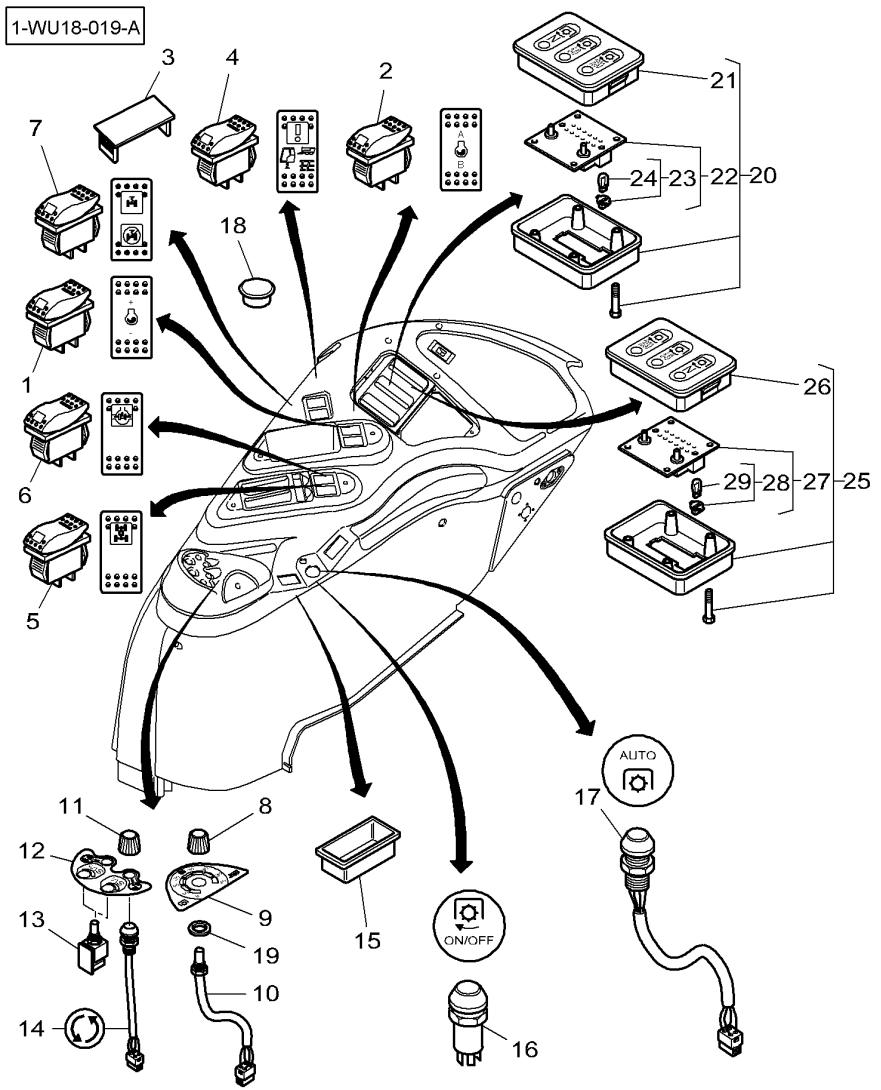

27		25	REF. 25	**1**	PRINTED CIRCUIT	CIRCUIT IMPRIME CIRCUITO STAMP.	GEDRUCKTESCHALTG CIRCUITO IMPRESO
28	3713385M1	27		**2**	LAMP SOCKET	PORTE LAMPE PORTA LAMPADA	LAMPENFASSUNG PORTA LAMPARA
29	**3405185M1**	28		**1**	BULB 12V 1.2W	AMPOULE 12V 1.2W BULBO 12V 1,2W	GLUEHL 12V 1.2W BOMBILLA 12V1,2W

External Controls Fitted On The Rear Fenders
Commandes Externes Montee Sur Les Ailes Arrieres
Aussenschaltung Auf Die Kotfluegel
Commando Esterno Sopra Il Parafangos
Mando Externo Sobre El Guadabarros

80-20

1-WU22-006-A

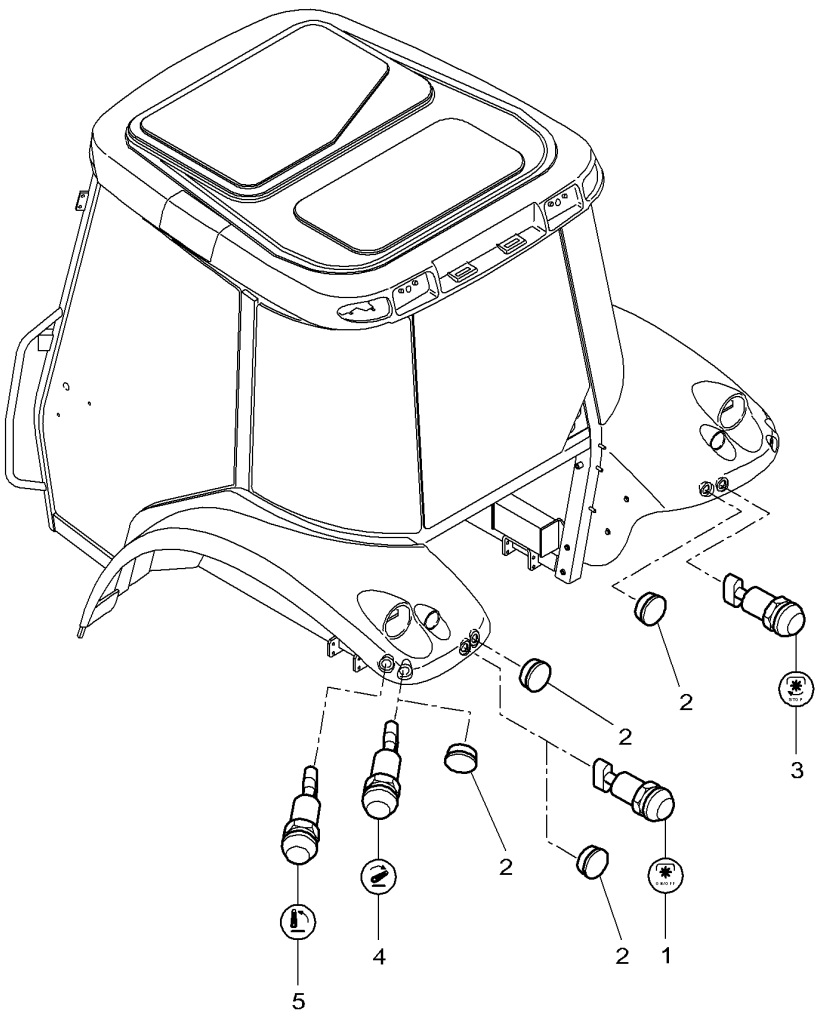

1*	4284629M1		**1**	SWITCH,INDIRECT	CONTACTEUR INTERRUTTORE IND CONTACTOR
2	4274755M2	∅ 31 MM	**X**	PLUG	BOUCHON TAPPO STOPFEN TAPON
3*	4284630M1		**1**	SWITCH,INDIRECT	CONTACTEUR INTERRUTTORE IND CONTACTOR
4*	**4284627M2**	[B]	**2**	SWITCH,INDIRECT	CONTACTEUR INTERRUTTORE IND CONTACTOR
5*	**4284628M2**	[A]	**2**	SWITCH,INDIRECT	CONTACTEUR INTERRUTTORE IND CONTACTOR

[A] UP
MONTEE
GESTIEGEN
SALITA
SUBIDA

[B] DOWN
DESCENTE
HERABSTEIGEN
DISCESA
BAJADA

Engine Harness
Faisceau Moteur
Kabelnezt Motor
Fasciocavi Di Motore
Haz De Hilos De Motor

80-25

1-WW20-015-B

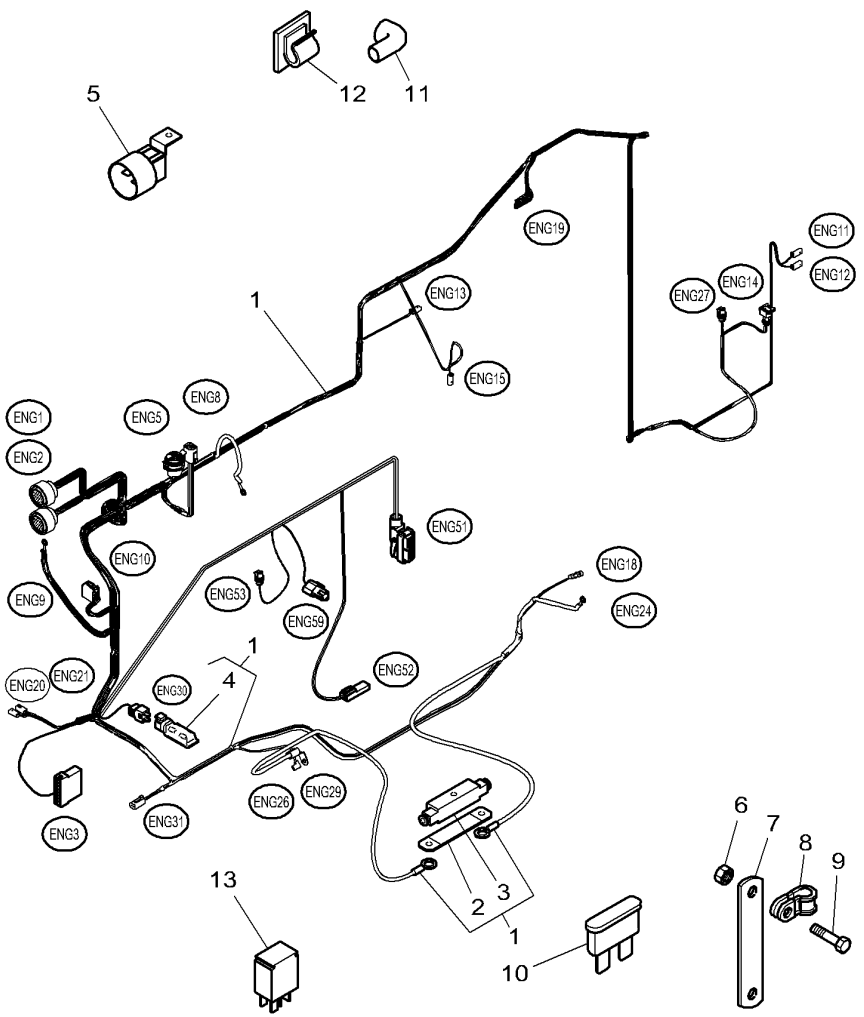

1*	4282740M94		**1**	HARNESS	FAISCEAU FASCIOCAVI	KABELBAUM MAZO CABLES
2	**3789732M1**	1 225 AMP	**1**	FUSE	FUSIBLE FUSIBILE	SICHERUNG FUSIBLE
3*	3789733M2	1	**1**	CASE ASSY	BOITIER CARCASSA COMPLET	GEHAEUSE KPL CAJA COMPLETA
4	**4274355M2**	1	**1**	DIODE	DIODE DIODO	DIODE DIODO
5	**3779879M1**	12V - 50A	**2**	RELAY	RELAIS RELE	RELAIS RELE
6	339169X1	M8	**3**	NUT	ECROU DADO	MUTTER TUERCA
6	339402X1	M10	**1**	NUT SPECIAL	ECROU SPECIAL DADO SPECIALE	SPEZIALMUTTER TUERCA ESPECIAL
7	3778841M2		**1**	STRAP	PATTE CORREGGIA	LASCHE FAJA
8	3581424M1	∅ 30 - M8	**2**	CLIP	PATTE D'ATTACHE FERMAGLIO	SCHELLE CLIP
8	3779547M1	∅ 22 - M10	**1**	CLAMP	COLLIER FASCETTA	HALTESCHELLE ABRAZADERA
9	339123X1	M8 X 20	**3**	HEX. SOCK. SCREW	VIS TETE HEX VITE PARKER	ZYLINDERSCHRAUBE TORN.CAB.HUECA
9	3009205X1	M10	**1**	PLOUGH BOLT	VIS A EMBASE VITE TESTA TONDA	SENKSCHLOSSSCHRB TORNILLO ALOJ C
10	**4271799M1**	5 AMP	**3**	FUSE	FUSIBLE FUSIBILE	SICHERUNG FUSIBLE
10	**4271801M1**	10 AMP	**2**	FUSE	FUSIBLE FUSIBILE	SICHERUNG FUSIBLE
10	**4271802M1**	15 AMP	**2**	FUSE	FUSIBLE FUSIBILE	SICHERUNG FUSIBLE
11	3784666M1		**1**	HELMET	CAPUCHON CASCO	SCHUTZHELM CASCO
12	3582094M1		**24**	TIE	ATTACHE TRAVERSA ATTACCO	ANBINDUNG BARRA DE ENLACE
13	**4272431M1**	12V - 10/20A 4RD 007 814-01	**4**	RELAY	RELAIS RELE	RELAIS RELE

Instrument Panel Harness
Faisceau Tableau De Bord
Kabelnezt Instrumentenbrett
Fasciocavi Cruscotto
Haz Tablero De Instrumentos

80-30

1-WW19-018-B

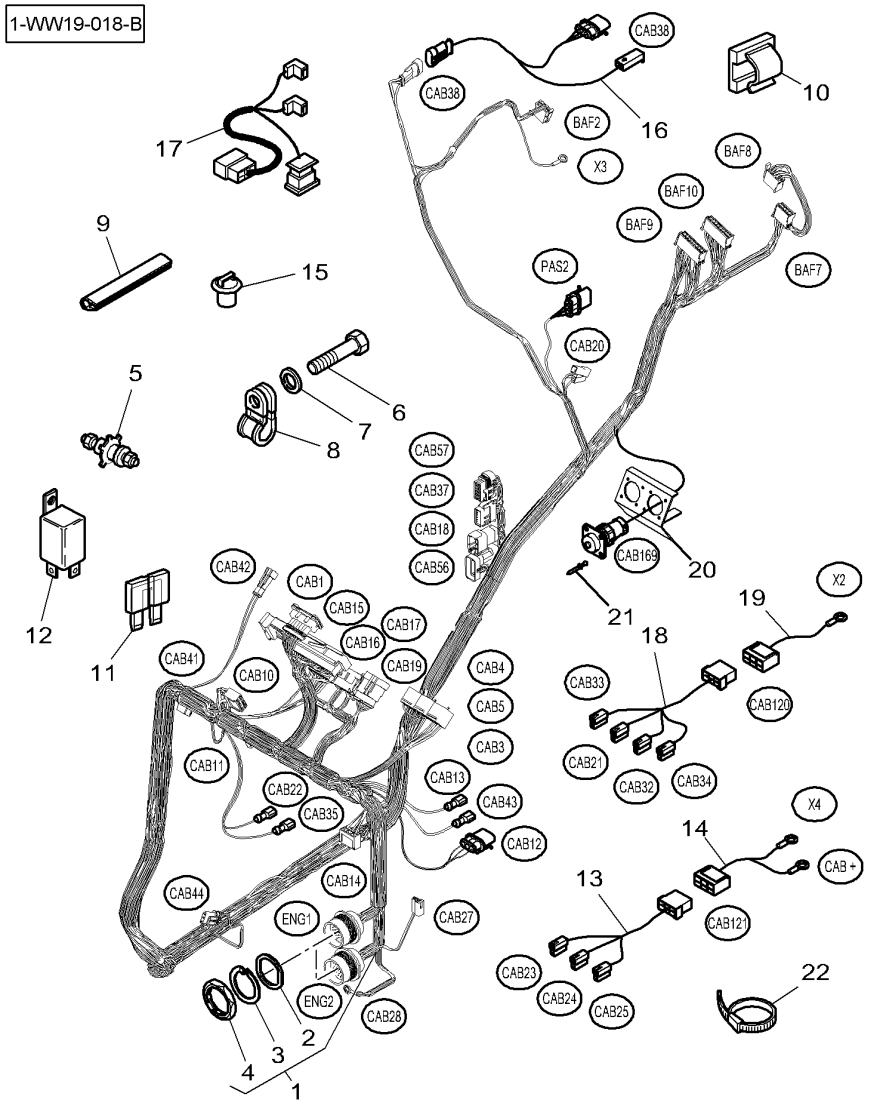

1	4281604M1			**1**	HARNESS	FAISCEAU FASCIOCAVI	KABELBAUM MAZO CABLES
2	3013355X1	1		**1**	SEAL	JOINT ETANCHEITE GIUNTO ROTONDO	DICHTRING JUNTA REDONDA
3	3013354X1	1		**1**	WASHER	RONDELLE RONDELLA	SCHEIBE ARANDELA
4	3013353X1	1		**1**	NUT	ECROU DADO	MUTTER TUERCA
5	72500822			**1**	TERMINAL	BORNE MORSETTO	BATTERIEPOLE BORNE
6				**X**	NOT USED	NON UTILISE INUSATO	NICHT VERWENDET NO SE USA
7	22428X	➡ 03-AUG-2006		**1**	TOOTH WASHER	RONDELLE DENTEE ROSETTA DENTATA	ZAHNSCHEIBE ARANDELA ESTRELL
7*	3010597X1	∅ 8-20 X 2 ➡ 04-AUG-2006		**1**	TOOTH WASHER	RONDELLE DENTEE ROSETTA DENTATA	ZAHNSCHEIBE ARANDELA ESTRELL
8	3581424M1	∅ 25 MM		**1**	CLIP	PATTE D'ATTACHE FERMAGLIO	SCHELLE CLIP
9	3580695M1	[A] ◀▶ 1600 MM		**1**	GASKET	JOINT GIUNTO PIANO	FLACHDICHTUNG JUNTA PLANA
10	3760697M1			**1**	TIE	ATTACHE TRAVERSA ATTACCO	ANBINDUNG BARRA DE ENLACE
11	**4271801M1**	10 AMP		**1**	FUSE	FUSIBLE FUSIBILE	SICHERUNG FUSIBLE
11	**4271842M1**	40 AMP		**1**	FUSE	FUSIBLE FUSIBILE	SICHERUNG FUSIBLE
12	**4272431M1**	12V - 10/20A 4RD 007 814-01		**1**	RELAY	RELAIS RELE	RELAIS RELE
13	4276768M91			**1**	HARNESS	FAISCEAU FASCIOCAVI	KABELBAUM MAZO CABLES
14	4277434M91			**1**	HARNESS	FAISCEAU FASCIOCAVI	KABELBAUM MAZO CABLES
15*	4278720M1			**X**	TIE	ATTACHE TRAVERSA ATTACCO	ANBINDUNG BARRA DE ENLACE
16				**X**	NOT USED	NON UTILISE INUSATO	NICHT VERWENDET NO SE USA
17	3783857M1			**1**	HARNESS	FAISCEAU FASCIOCAVI	KABELBAUM MAZO CABLES
18	4276769M91			**1**	HARNESS	FAISCEAU FASCIOCAVI	KABELBAUM MAZO CABLES
19	4277205M91	◀▶ 630 MM		**1**	HARNESS	FAISCEAU FASCIOCAVI	KABELBAUM MAZO CABLES
20*	4282622M1			**1**	SUPPORT	SUPPORT SOPPORTO	TRAGER SOPORTE
21*	3011214X1			**4**	RIVET	RIVET RIVETTO	NIET REMACHE
22*	3619622M1			**X**	CABLE TIE	ATTACHE CABLE FASCETTA CAVI	KABELBINDER APRIETACABLES

Instrument Panel Harness
Faisceau Tableau De Bord
Kabelnezt Instrumentenbrett
Fasciocavi Cruscotto
Haz Tablero De Instrumentos

80-30

1-WW19-018-B

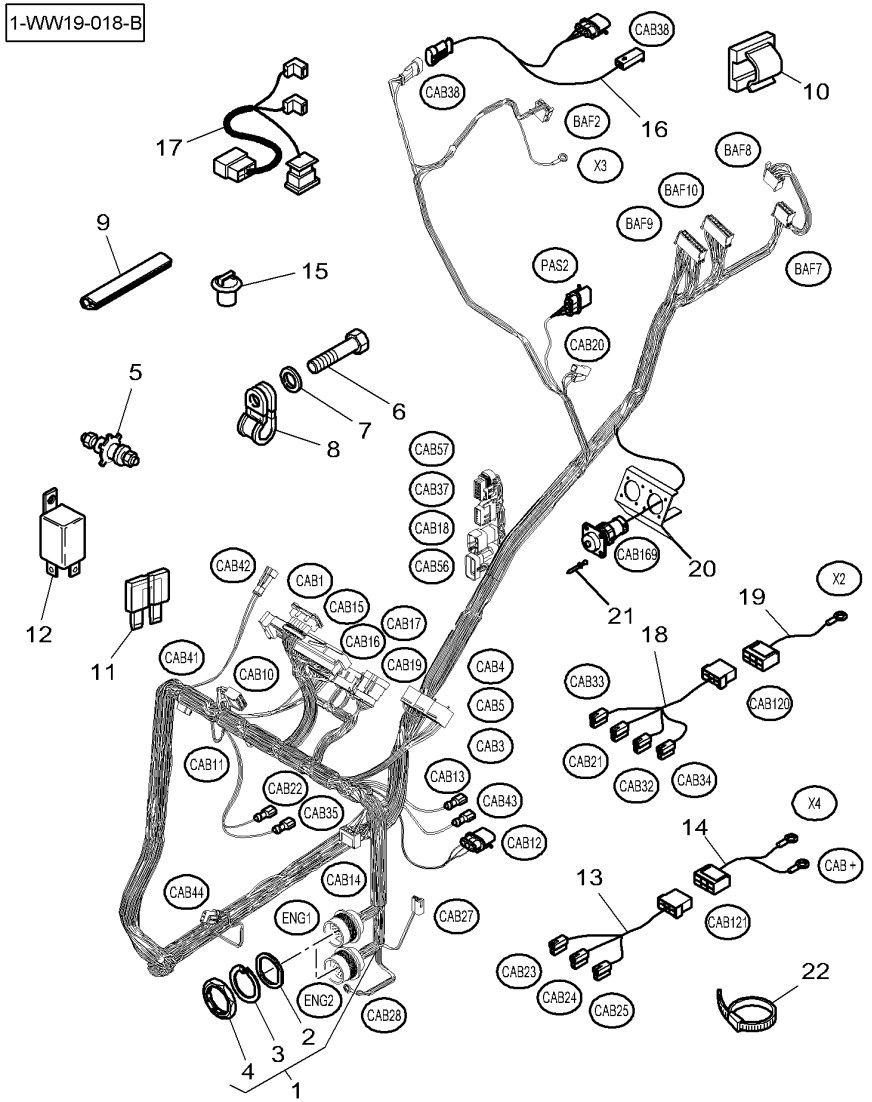

[A] CUT TO REQUIRED LENGTH
COUPER A LA LONGEUR DESIREE
BENOETIGTE LAENGE ABSCHNEIDEN
TAGLIARE ALLA LUNGHEZZA DESIDERATA
CORTAR A LA LONGITUD DESEADA

Instrument Panel Harness	**Armrest**	**80-35**	**Fingertip**
Faisceau Tableau De Bord	**Accoudoir**		**Fingertip**
Kabelnezt Instrumentenbrett	**Armlehne**		**Fingertip**
Fasciocavi Cruscotto	**Bracciolo**		**Fingertip**
Haz Tablero De Instrumentos	**Reposa Brazos**		**Fingertip**

1-WW18-004-A

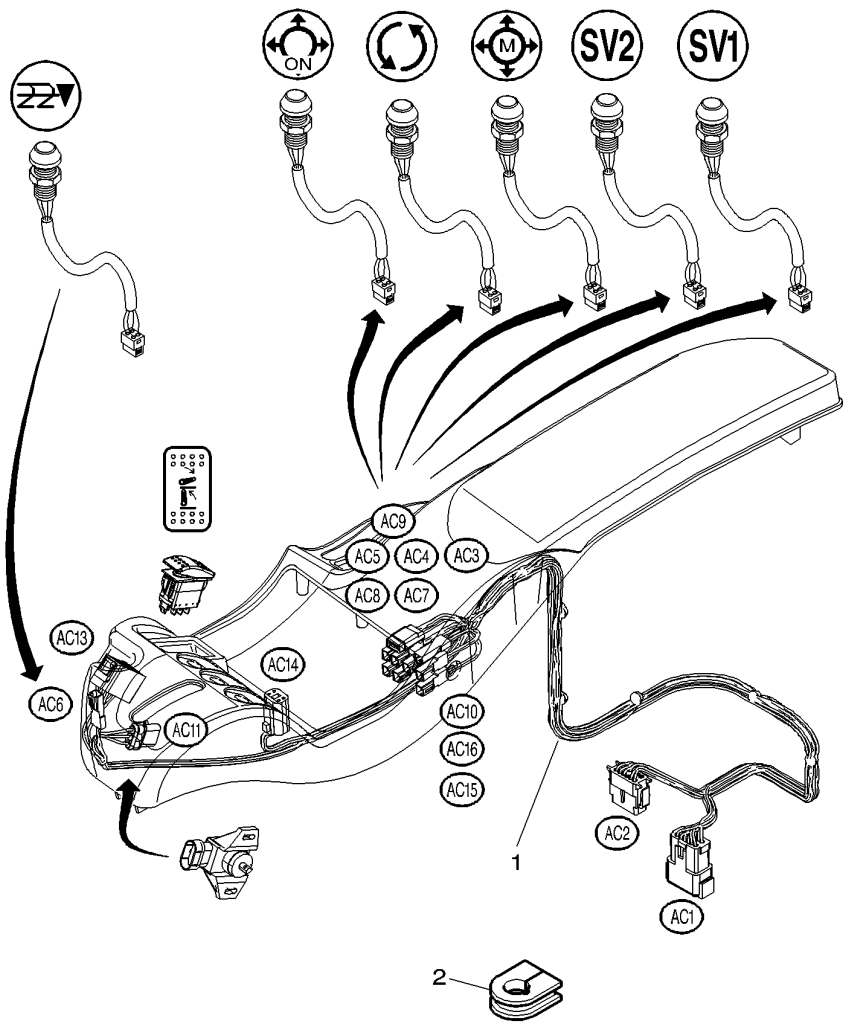

1	4277900M1			**1**	HARNESS	FAISCEAU FASCIOCAVI PASSE FIL ANELLO PASSACAVO
2	4271408M2	∅	19MM	**1**	GROMMET	KABELBAUM MAZO CABLES GUMMITUELLE PASACABLE

Plate Relay & Fuse Holder
Platine Porte Fusibles & Relais
Relais & Sicherung Halter Platte
Placa Porta Rele & Fusibile
Placa Porta Rele & Fusibile

80-40

1-WW50-001-E

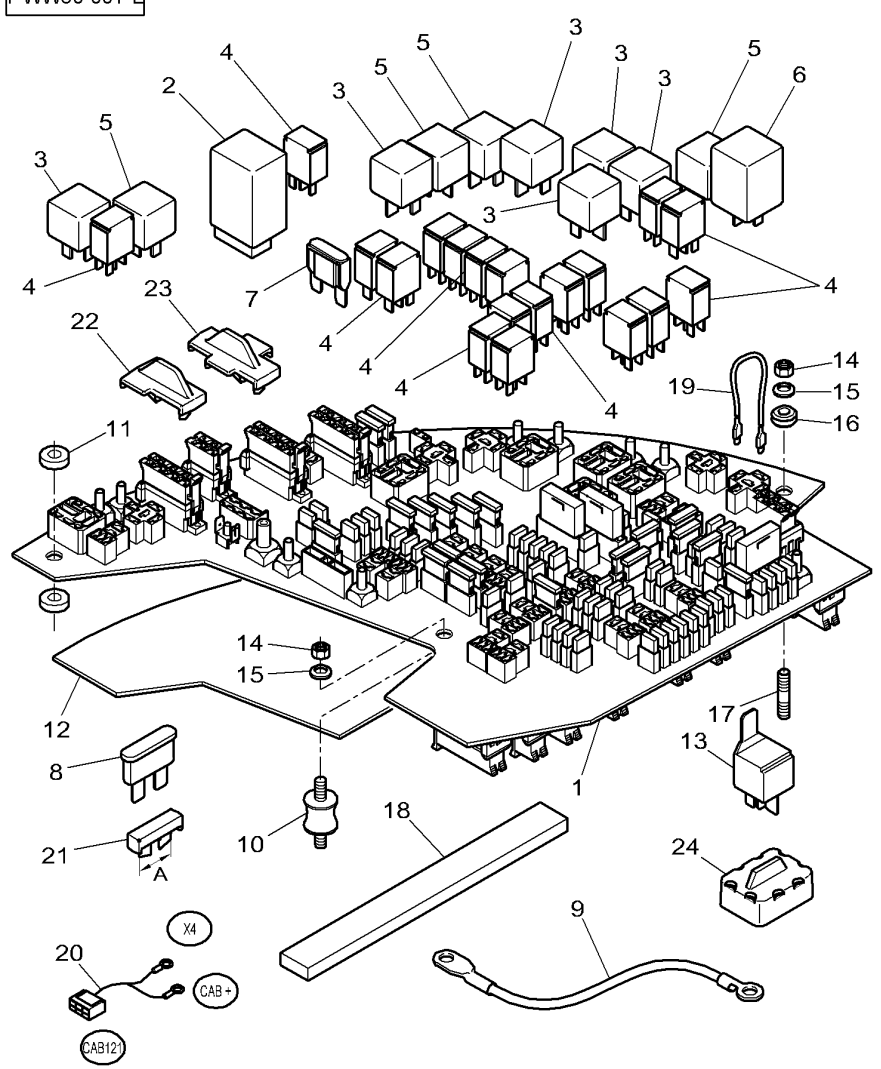

1	* 4275903M94	[D]	**1**	PLATE CLAMPING	PLATINE PIASTRA APPOGGIO	KLEMMPLATTE PLACA DE ABRAZO
2	**4271990M1**		**1**	BLINKER	CENTRALE CLIGNOT LAMPEGGIATORE	BLINKGERAET INTERMITENTE
2	**4271989M1**	(US)	**1**	BLINKER	CENTRALE CLIGNOT LAMPEGGIATORE	BLINKGERAET INTERMITENTE
3	**4270844M1**	[E] 12V 4RA 007 793-03	**X**	RELAY	RELAIS RELE	RELAIS RELE
4	**4272431M1**	[E] 12V 10/20A 4RD 007 814-01	**X**	RELAY	RELAIS RELE	RELAIS RELE
5	**4272432M1**	[E] 12V 4RD 007 794-02	**X**	RELAY	RELAIS RELE	RELAIS RELE
6	**4271991M1**		**1**	RELAY	RELAIS RELE	RELAIS RELE
7	**4271803M1**	[E] 50 AMP ◀▶ 29,2MM	**1**	FUSE	FUSIBLE FUSIBILE	SICHERUNG FUSIBLE
8	**4271799M1**	[E] 5 AMP ◀▶ 11,2MM	**X**	FUSE	FUSIBLE FUSIBILE	SICHERUNG FUSIBLE
8	**4271800M1**	[E] 7.5 AMP ◀▶ 11,2MM	**X**	FUSE	FUSIBLE FUSIBILE	SICHERUNG FUSIBLE
8	**4271801M1**	[E] 10 AMP ◀▶ 11,2MM	**X**	FUSE	FUSIBLE FUSIBILE	SICHERUNG FUSIBLE
8	**4271802M1**	15 AMP ◀▶ 11,2MM	**X**	FUSE	FUSIBLE FUSIBILE	SICHERUNG FUSIBLE
8	**3580868M1**	[E] 3 AMP ◀▶ 19,5 MM	**X**	FUSE	FUSIBLE FUSIBILE	SICHERUNG FUSIBLE
8	3387321M1	15 AMP ◀▶ 19,5 MM	**X**	FUSE	FUSIBLE FUSIBILE	SICHERUNG FUSIBLE
8	**3780003M1**	[E] 20 AMP ◀▶ 19MM	**X**	FUSE	FUSIBLE FUSIBILE	SICHERUNG FUSIBLE
8	**3387322M1**	[E] 25 AMP ◀▶ 19MM	**X**	FUSE	FUSIBLE FUSIBILE	SICHERUNG FUSIBLE
8	**3712661M1**	[E] 30 AMP ◀▶ 19MM	**X**	FUSE	FUSIBLE FUSIBILE	SICHERUNG FUSIBLE
8	**4271842M1**	40 AMP ◀▶ 29,2MM	**X**	FUSE	FUSIBLE FUSIBILE	SICHERUNG FUSIBLE
9	4275698M1	[A] ◀▶ 2000 MM ∅ 8 + 8	**1**	CABLE	CABLE CAVO	KABEL CABLE

Plate Relay & Fuse Holder
Platine Porte Fusibles & Relais
Relais & Sicherung Halter Platte
Placa Porta Rele & Fusibile
Placa Porta Rele & Fusibile

80-40

1-WW50-001-E

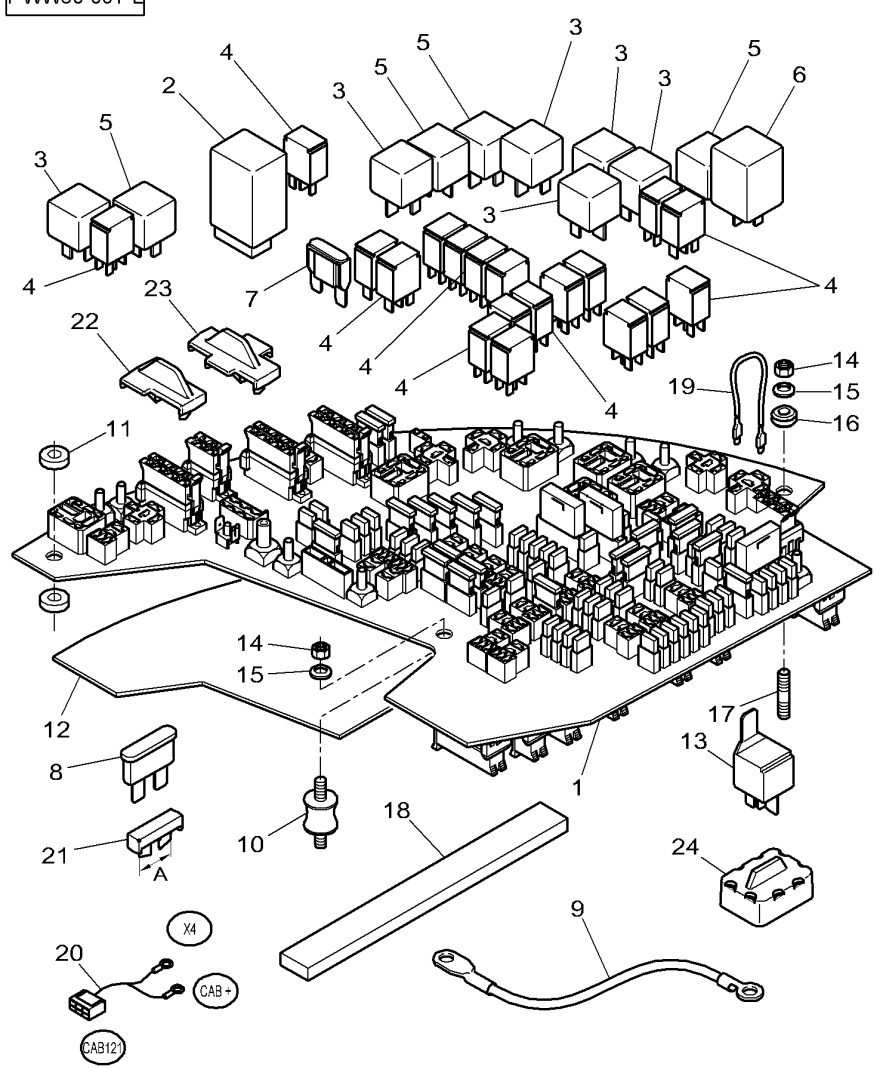

9*	4277435M91	[A] ◀▶ 390 MM ∅ 10 + 8	**1**	HARNESS	FAISCEAU FASCIOCAVI	KABELBAUM MAZO CABLES
10	4271913M1		**1**	DOWEL	PLOT SPINA	ZYLINDERSTIFT CENTRAJE
11			**X**	NOT USED	NON UTILISE INUSATO	NICHT VERWENDET NO SE USA
12	4273612M1		**1**	FOAM	MOUSSE GOMMAPIUMA	SCHAUMSTOFF ESPUMA
13	**3387326M2**	12V-50A 4RA 007 793-04	**1**	RELAY	RELAIS RELE	RELAIS RELE
14	339030X1	M6	**3**	NUT	ECROU DADO	MUTTER TUERCA
14	1441500X1	[C] M6	**1**	TOP LOCKNUT	ECROU AUTOFREINE DADO DI TESTA	SELBSTS.MUTTER CONTRATUERCA SUP
15	391038X1		**3**	FLAT WASHER	RONDELLE PLATE RONDELLE PIANA	UNTERLEGSCHEIBEN ARANDELA PLANA
16	3814812M1		**2**	GROMMET	PASSE FIL ANELLO PASSACAVO	GUMMITUELLE PASACABLE
17	3019057X1	M6 X 30	**1**	STUD	GOUJON SPINOTTO FILETT.	STEHBOLZEN ESPARRAGO ROSCA.
17	3019056X1	M6 X 25	**1**	STUD	GOUJON SPINOTTO FILETT.	STEHBOLZEN ESPARRAGO ROSCA.
18	4277850M1	◀▶ 865 X 7 X 4	**1**	GASKET	JOINT GIUNTO PIANO	FLACHDICHTUNG JUNTA PLANA
19	4276825M1	◀▶ 100 MM	**1**	WIRE	FIL FILO	DRAHT HILO
20*			**1**	NOT USED	NON UTILISE INUSATO	NICHT VERWENDET NO SE USA
21	4280414M1	[H] A= 11 MM	**X**	PLUG	BOUCHON TAPPO	STOPFEN TAPON
21	4280415M1	[H] A= 14,7 MM	**X**	PLUG	BOUCHON TAPPO	STOPFEN TAPON
21	4280416M2	[H] A= 29 MM ➡ R129020	**X**	PLUG	BOUCHON TAPPO	STOPFEN TAPON
22	4280417M1	[I]	**X**	PLUG	BOUCHON TAPPO	STOPFEN TAPON
23	4280418M2	[I] ➡ R129020	**X**	PLUG	BOUCHON TAPPO	STOPFEN TAPON
24	4280419M1	[I] 50 AMP	**X**	PLUG	BOUCHON TAPPO	STOPFEN TAPON

[A] BLACK
NOIR
SCHWARZ
NERO
NEGRO

Plate Relay & Fuse Holder
Platine Porte Fusibles & Relais
Relais & Sicherung Halter Platte
Placa Porta Rele & Fusibile
Placa Porta Rele & Fusibile

80-40

1-WW50-001-E

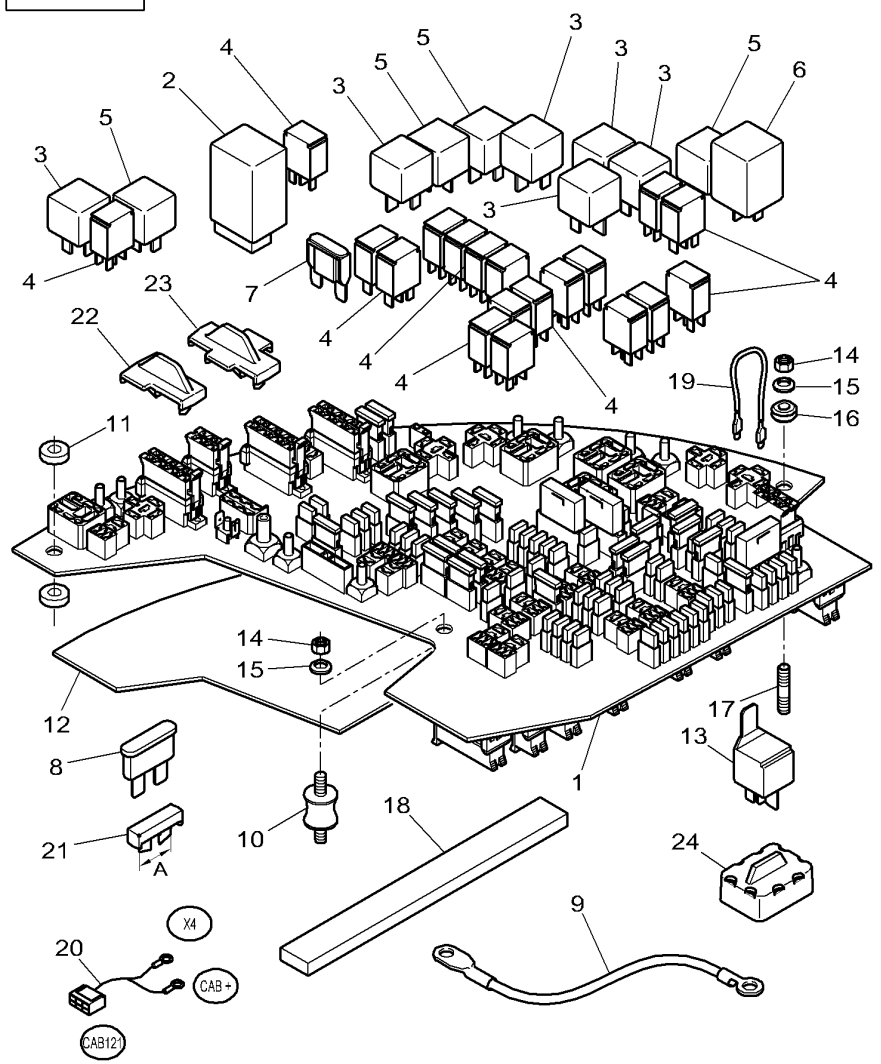

[C] CHECK NUT
ECROU AUTOFREINE
MUTTER SELBST BREMST
DADO AUTOFREINAR
TUERCA AUTOFREINAR

[D] PREEQUIPED PLATE CLAMPING
PLATINE PRE-EQUIPEE
VORKAUSRUEST KLEMMPLATTE
PIASTRA APPOGGIO PREEQUIP
PLACA DE ABRAZO PREEQUIP

[E] BELONGS TO ASSEMBLY 4275903M94
COMPRIS DANS L'ENSEMBLE 4275903M94
GEHOERT ZUR MONTAGEGRUPPE 4275903M94
APPARTENENTI AL COMPLESSIVO 4275903M94
APARTENECE AL GRUPO MONTAJE 4275903M94

[H] FUSE
FUSIBLE
SICHERUNG
FUSIBILE
FUSIBLE

[I] RELAY
RELAIS
RELAIS
RELE
RELE

Roof Harness
Faisceau Plafond
Kabelnezt Dach
Fasciocavi Di Tetto
Haz De Hilos De Techo

80-45

1-WW22-010-C

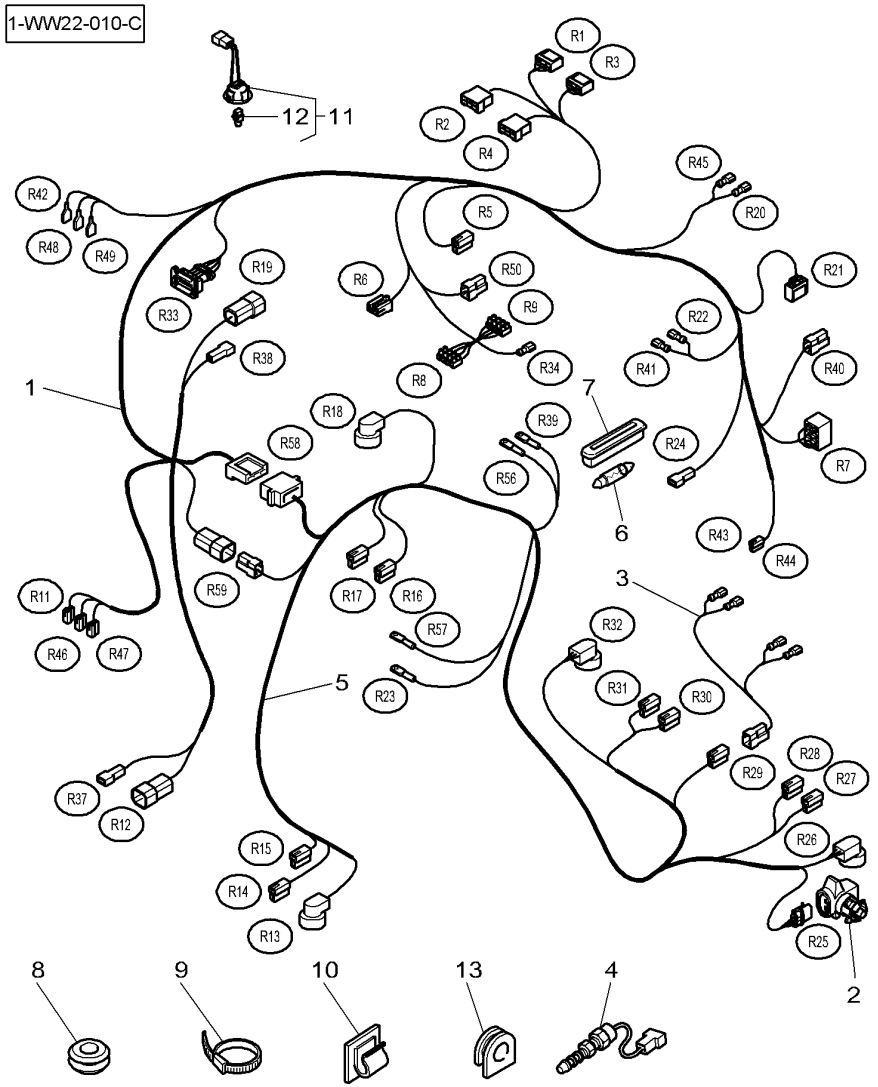

1	4277269M92		
2	3714264M1	[A]	
3	3787513M91		
4	**3780395M2**		
5	4277271M91		
6	**3385821M1**		
7	3385820M1		
8	367439X1	∅	15-25
8	3714694M1	∅	7-21
9	3619622M1		
10*	3760697M1		
11	3786673M1	[B]	
12	**3907271M1**	11	
13	3387555M1	∅	11 mm

[A] TEMPERATURE SENSOR
SONDE DE TEMPERATURE
TEMPERATURSENSOR
SENSORE DI TEMPERATURA
CAPTADOR DETEMPERATURA

[B] CONSOLE READING LAMP
ECLAIREUR DE CONSOLE
BELEUCHTUNG KONSOLE
ILLUMINAZIONE MENSOLA
ALUMBRADO CONSOLA

1	HARNESS	FAISCEAU FASCIOCAVI	KABELBAUM MAZO CABLES
1	TRANSMITTER	TRANSMETTEUR TRASMETTITORE	UEBERTRAEGER TRANSMISOR
1	HARNESS	FAISCEAU FASCIOCAVI	KABELBAUM MAZO CABLES
1	SWITCH,INDIRECT	CONTACTEUR INTERRUTTORE IND	KONTAKTSCHALTER CONTACTOR
1	HARNESS	FAISCEAU FASCIOCAVI	KABELBAUM MAZO CABLES
1	BULB 12V 10W	AMPOULE 12V 10W BULBO 12V 10W	GLUEHL 12V 10W BOMBILLA 12V 10W
1	ROOF LIGHT	PLAFONNIER PLAFONIERA	DECKENLEUCHTE LUZ INTERIOR
1	GROMMET	PASSE FIL ANELLO PASSACAVO	GUMMITUELLE PASACABLE
1	GROMMET	PASSE FIL ANELLO PASSACAVO	GUMMITUELLE PASACABLE
X	CABLE TIE	ATTACHE CABLE FASCETTA CAVI	KABELBINDER APRIETACABLES
3	TIE	ATTACHE TRAVERSA ATTACCO	ANBINDUNG BARRA DE ENLACE
1	ROOF LIGHT	PLAFONNIER PLAFONIERA	DECKENLEUCHTE LUZ INTERIOR
1	BULB 12V 5W	AMPOULE 12V 5W BULBO 12V 5W	GLUEHL 12V 5W BOMBILLA 12V 5W
1	GROMMET	PASSE FIL ANELLO PASSACAVO	GUMMITUELLE PASACABLE

Pillar Harness
Faisceau De Pilier
Kabelnezt Der Kabinesaeule
Fasciocavi Di Montante
Haz De Hilos De Montante

80-50

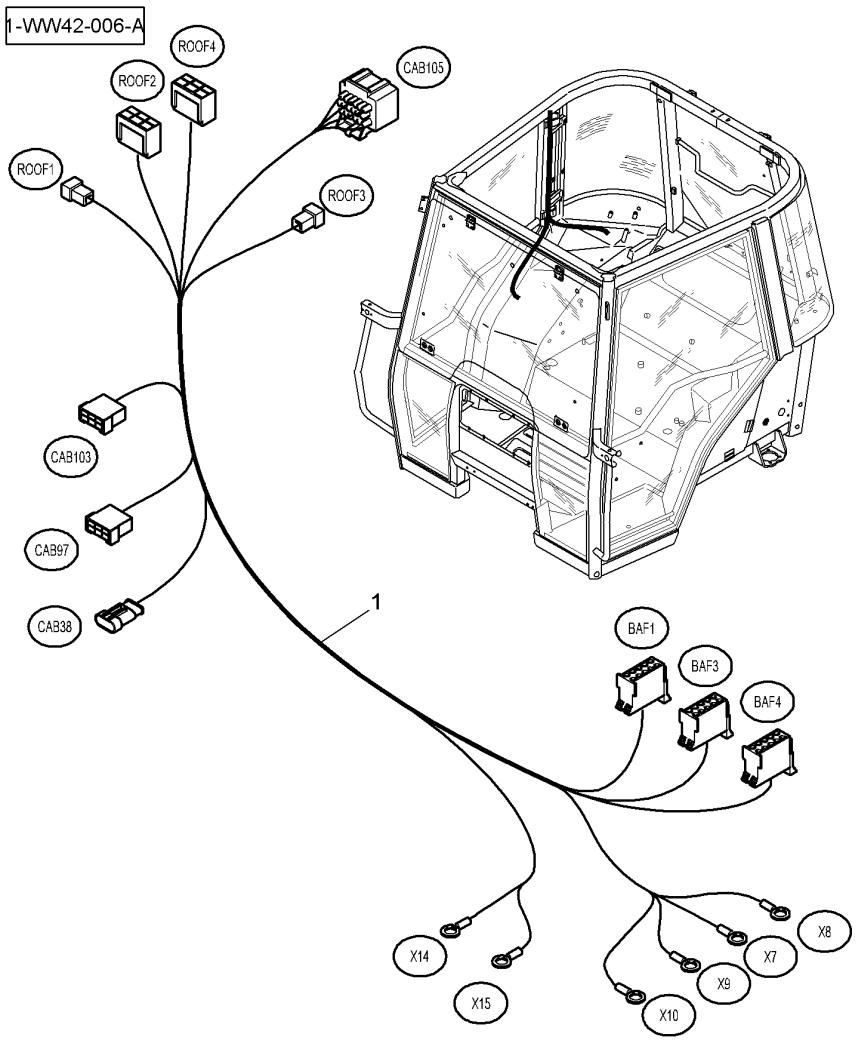

1	4282944M1	**1**	HARNESS	FAISCEAU FASCIOCAVI	KABELBAUM MAZO CABLES

Front Lightning Harness
Faisceau Eclairage Avant
Vorne Kabelnezt Beleuchtung
Fasciocavi Anteriore Di Illuminazione
Haz De Hilos Delantero De Iluminacion

80-55

US

1-WW44-003-B

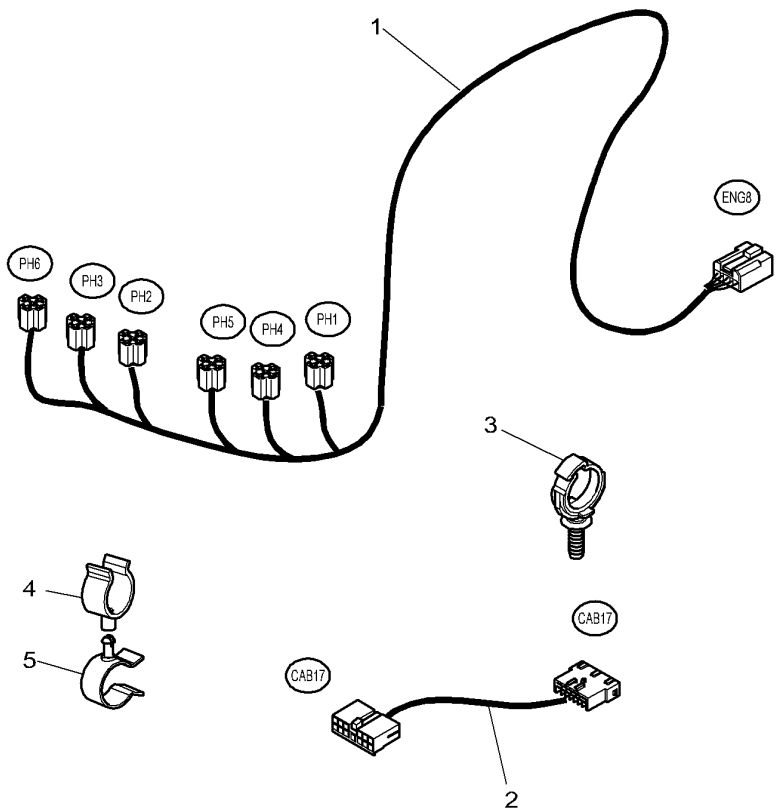

1	4278403M91		**1**	HARNESS	FAISCEAU FASCIOCAVI	KABELBAUM MAZO CABLES
2	4278937M91	◀▶ 150 MM	**1**	WIRE	FIL FILO	DRAHT HILO
3	4280260M1		**5**	TIE	ATTACHE TRAVERSA ATTACCO	ANBINDUNG BARRA DE ENLACE
4	4282000M1		**2**	STRAP	PATTE CORREGGIA	LASCHE FAJA
5	4281999M1		**2**	STRAP	PATTE CORREGGIA	LASCHE FAJA

Front Lightning Harness
Faisceau Eclairage Avant
Vorne Kabelnezt Beleuchtung
Fasciocavi Anteriore Di Illuminazione
Haz De Hilos Delantero De Iluminacion

80-60

1-WW44-004-B

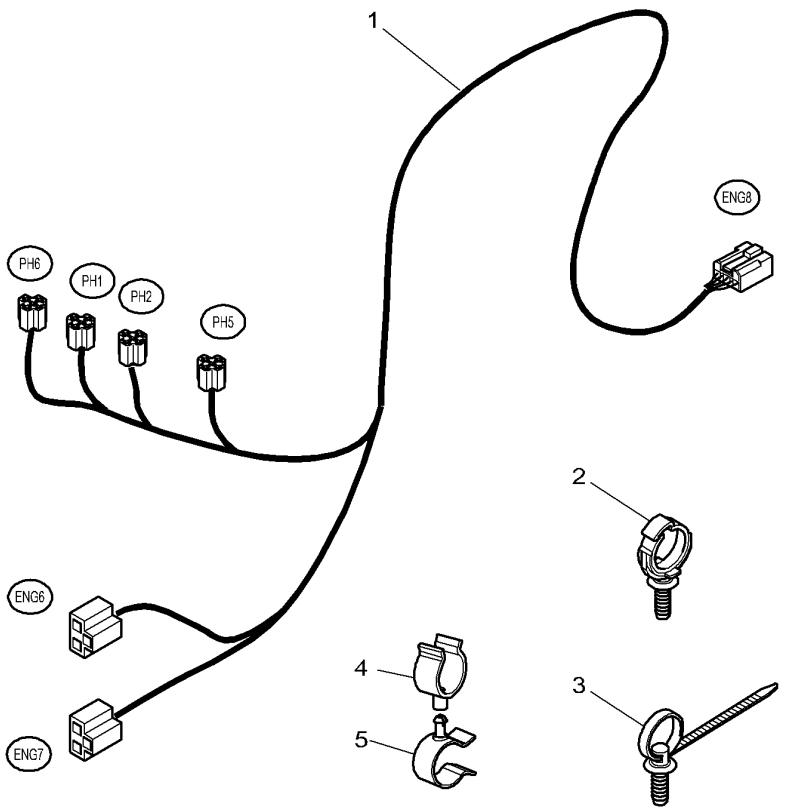

1	4280568M1	**1**	HARNESS	FAISCEAU FASCIOCAVI
2	4280260M1	**5**	TIE	ATTACHE TRAVERSA ATTACCO
3	4278314M1	**2**	CLAMP	COLLIER FASCETTA
4	4282000M1	**2**	STRAP	PATTE CORREGGIA
5	4281999M1	**2**	STRAP	PATTE CORREGGIA

		KABELBAUM		
		MAZO CABLES		
		ANBINDUNG		
		BARRA DE ENLACE		
		HALTESCHELLE		
		ABRAZADERA		
		LASCHE		
		FAJA		
		LASCHE		
		FAJA		

Rear Lightning Harness
Faisceau Eclairage Arriere
Hinten Kabelnezt Beleuchtung
Fasciocavi Posteriore Di Illuminazione
Haz De Hilos Trasero De Iluminacion

80-65

PLANCHES EN COURS D'ILLUSTRATION

1*	3787528M95			**1**	HARNESS	FAISCEAU FASCIOCAVI	KABELBAUM MAZO CABLES
2*	4276770M94			**1**	HARNESS	FAISCEAU FASCIOCAVI	KABELBAUM MAZO CABLES
3	3013355X1	2		**1**	SEAL	JOINT ETANCHEITE GIUNTO ROTONDO	DICHTRING JUNTA REDONDA
4	3013354X1	2		**1**	WASHER	RONDELLE RONDELLA	SCHEIBE ARANDELA
5	3013353X1	2		**1**	NUT	ECROU DADO	MUTTER TUERCA
6*	4291316M1	➡ 26-MAR-2007		**1**	SUPPORT	SUPPORT SOPPORTO	TRAGER SOPORTE
7*	339030X1	M6 ➡ 26-MAR-2007		**1**	NUT	ECROU DADO	MUTTER TUERCA

Rear Lightning Harness
Faisceau Eclairage Arriere
Hinten Kabelnezt Beleuchtung
Fasciocavi Posteriore Di Illuminazione
Haz De Hilos Trasero De Iluminacion

80-70

US

PLANCHES EN COURS D'ILLUSTRATION

1	4278756M3			**1**	HARNESS	FAISCEAU FASCIOCAVI	KABELBAUM MAZO CABLES
2	4278975M92			**1**	HARNESS	FAISCEAU FASCIOCAVI	KABELBAUM MAZO CABLES
3	3013355X1	2		**1**	SEAL	JOINT ETANCHEITE GIUNTO ROTONDO	DICHTRING JUNTA REDONDA
4	3013354X1	2		**1**	WASHER	RONDELLE RONDELLA	SCHEIBE ARANDELA
5	3013353X1	2		**1**	NUT	ECROU DADO	MUTTER TUERCA
6*	4291316M1	➡ 26-MAR-2007		**1**	SUPPORT	SUPPORT SOPPORTO	TRAGER SOPORTE
7*	339030X1	M6 ➡ 26-MAR-2007		**1**	NUT	ECROU DADO	MUTTER TUERCA

Trailor Electric Socket
Prise Electrique De Remorque
Steckeranhaenger
Presaellectric Di Rimorchio
Tomacorriente De Remolque

80-75

1-WW39-008-A

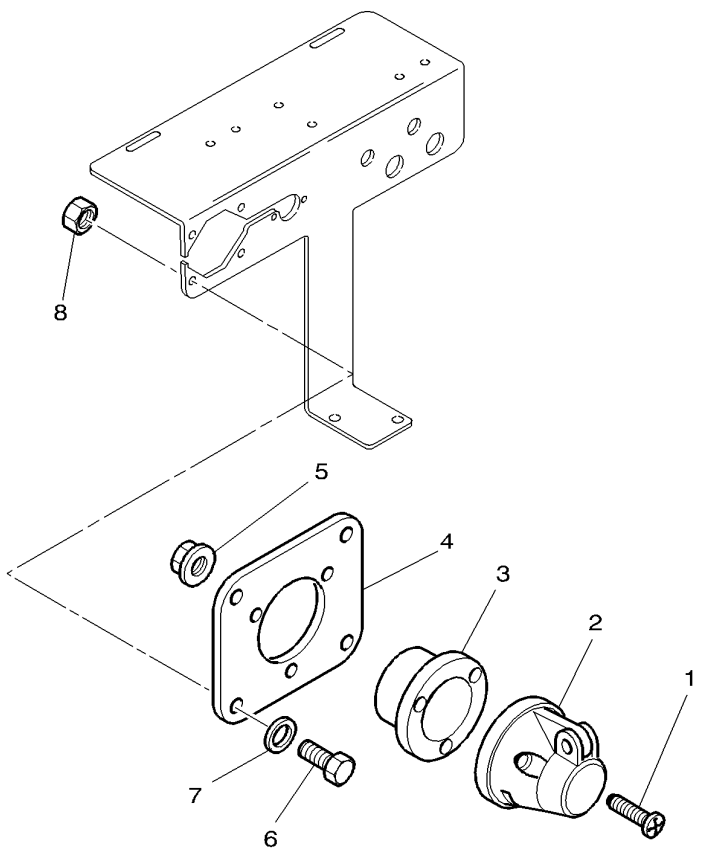

1	3009538X1	M5 X 35	**3**	SCREW	VIS VITE	SCHRAUBE TORNILLO
2	409965M1		**1**	SOCKET 7 PIN SUP	PRISE 7 BROCHES PRESA DA 7 SUPER	MEHRZW-SCHAUFEL ENCH.7ESPIG SUP
3	3041656M2		**1**	PLATE	PLAQUE PIASTRA	PLATTE PLATO
4	3785913M1		**1**	SUPPORT	SUPPORT SOPPORTO	TRAGER SOPORTE
5	3010477X1	M5	**3**	NUT METRIC	ECROU METRIQUE DADO METRICO	MUTTER METRISCH TUERCA METRICO
6	339560X1	M6 X 16	**4**	HEX. SOCK. SCREW	VIS TETE HEX VITE PARKER	ZYLINDERSCHRAUBE TORN.CAB.HUECA
7	339375X1		**4**	LOCK WASHER	RONDELLE FREIN RONDELLA ARRESTO	SICHERUNGSRING ARANDELA SEGURID
8	339030X1	M6	**4**	NUT	ECROU DADO	MUTTER TUERCA

Trailor Electric Socket
Prise Electrique De Remorque
Steckeranhaenger
Presaellectric Di Rimorchio
Tomacorriente De Remolque

80-80

US

1-WW39-009-A

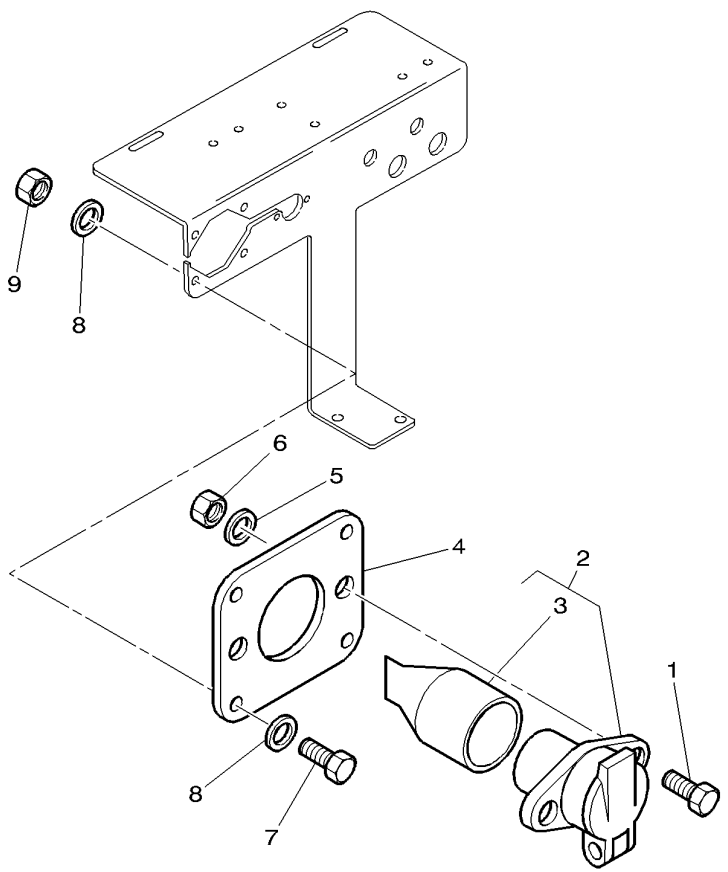

1	339123X1	M8 X 20	**2**	HEX. SOCK. SCREW	VIS TETE HEX VITE PARKER	ZYLINDERSCHRAUBE TORN.CAB.HUECA
2	3715923M91		**1**	INTAKE	PRISE ASPIRAZIONE	SAUGROHR ENTRADA
3	3715925M1	2	**1**	HELMET	CAPUCHON CASCO	SCHUTZHELM CASCO
4	3785914M1		**1**	SUPPORT	SUPPORT SOPPORTO	TRAGER SOPORTE
5	339374X1		**2**	LOCK WASHER	RONDELLE FREIN RONDELLA ARRESTO	SICHERUNGSRING ARANDELA SEGURID
6	339169X1	M8	**2**	NUT	ECROU DADO	MUTTER TUERCA
7	339560X1	M6 X 16	**4**	HEX. SOCK. SCREW	VIS TETE HEX VITE PARKER	ZYLINDERSCHRAUBE TORN.CAB.HUECA
8	339375X1		**4**	LOCK WASHER	RONDELLE FREIN RONDELLA ARRESTO	SICHERUNGSRING ARANDELA SEGURID
9	339030X1	M6	**4**	NUT	ECROU DADO	MUTTER TUERCA

Field Lights Harness Faisceau Phares De Travail Kabelnezt Arbeitsscheinwerfer Fasciacavi Di Luce Illuminazione Campo Haz De Hilos Del Luces De Campo	80-85	Handold Rambarde Gelaender Passamano Pasamanos

1-WW28-004-B

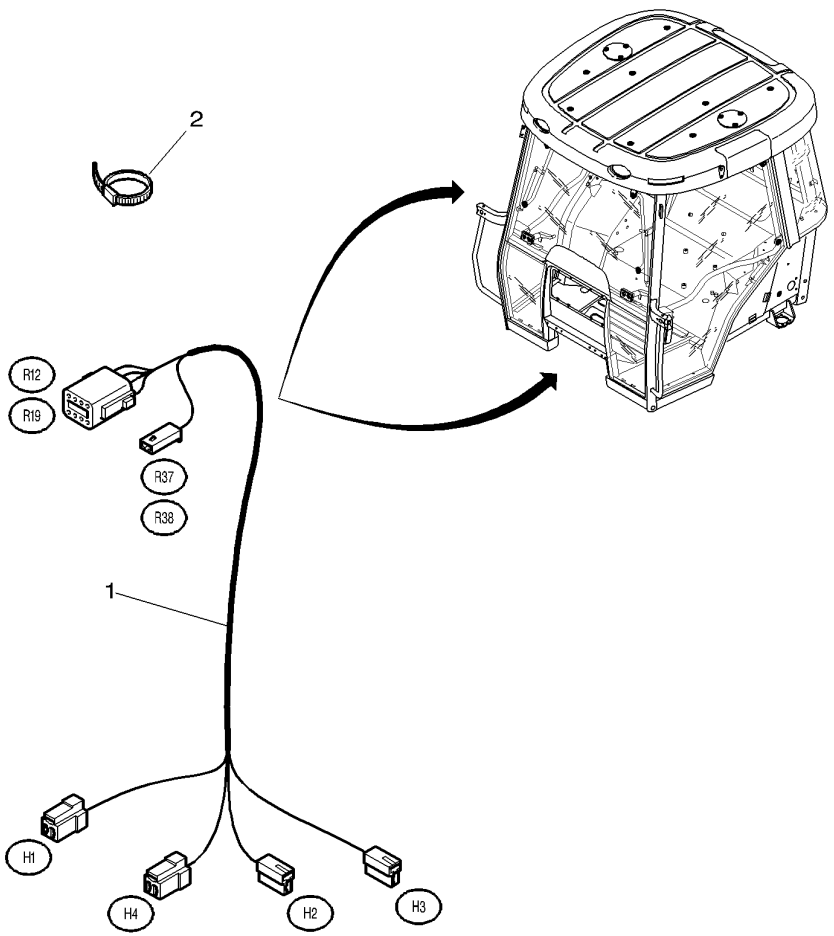

1	3787512M91	**2**	HARNESS	FAISCEAU FASCIOCAVI
2	3619622M1	**X**	CABLE TIE	ATTACHE CABLE FASCETTA CAVI

KABELBAUM
MAZO CABLES
KABELBINDER
APRIETACABLES

Automatic Air Conditioner Harness & Sensors
Faisceau Climatiseur Automatique & Capteurs
Automatisch Klimaanlage Kabelnezt Und Sensoren
Fasciocavi Di Condizionatore Di Aria Automatico E **Sensori**
Haz De Hilos Del Acondicionator De Aire Automatico Y **Sensores**

80-90

1-WW45-001-E

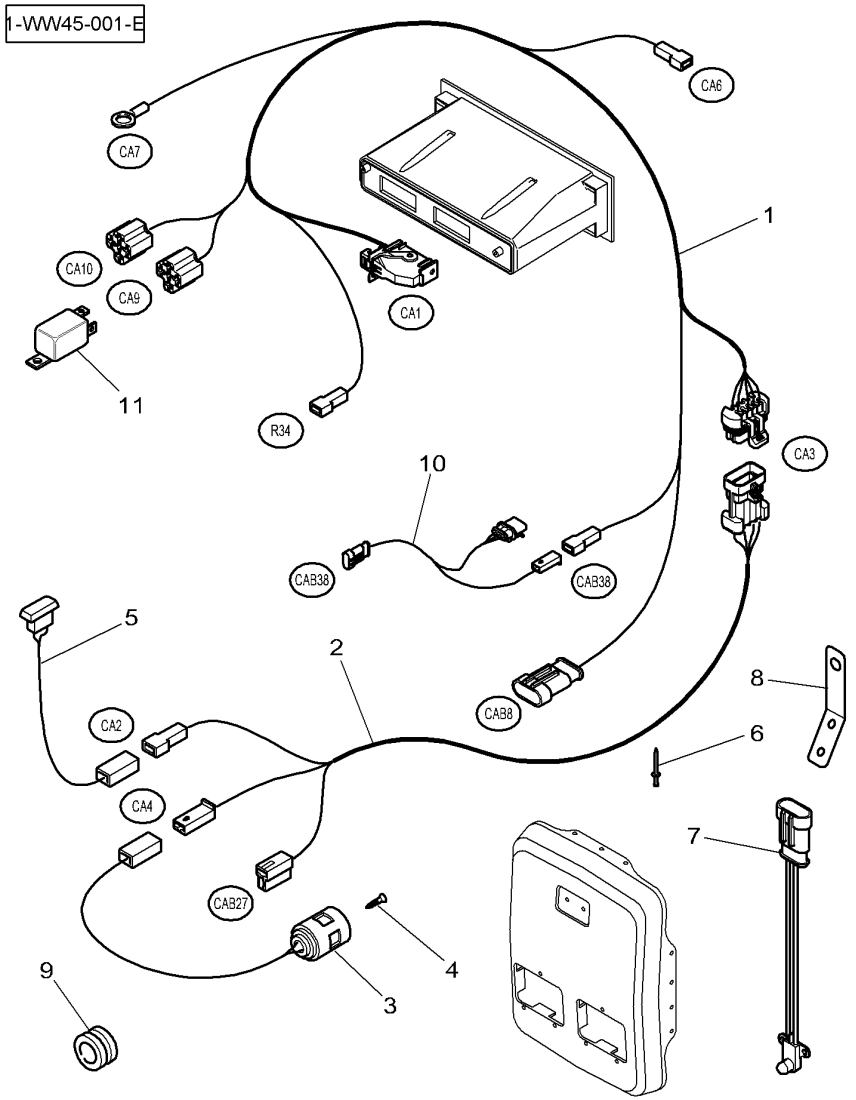

1	4272347M2		**1**	HARNESS	FAISCEAU FASCIOCAVI	KABELBAUM MAZO CABLES
2	4272151M3		**1**	HARNESS	FAISCEAU FASCIOCAVI	KABELBAUM MAZO CABLES
3	3787192M1	[A]	**1**	TEMP. SENSOR	SONDE TEMPERATUR TEMP. SENSOR	TEMPERATURGEBER EMISOR DEL CALOR
4	3787143M1		**2**	SCREW	VIS VITE	SCHRAUBE TORNILLO
5	3787185M1	[C]	**1**	TRANSDUCER	CAPTEUR TRANSDUCER	NABENTRIEB. TRANSDUCER
6	338662X1	∅ 2,40 mm	**2**	RIVET	RIVET RIVETTO	NIET REMACHE
7	3787184M1	[B]	**1**	TEMP. SENSOR	SONDE TEMPERATUR TEMP. SENSOR	TEMPERATURGEBER EMISOR DEL CALOR
8	4272846M1		**1**	SUPPORT	SUPPORT SOPPORTO	TRAGER SOPORTE
9*	3783677M1	∅ 7-21	**1**	GROMMET	PASSE FIL ANELLO PASSACAVO	GUMMITUELLE PASACABLE
10*			**X**	NOT USED	NON UTILISE INUSATO	NICHT VERWENDET NO SE USA
11	**3615652M1**	12V - 25 Amp	**2**	RELAY	RELAIS RELE	RELAIS RELE

[A] INSIDE TEMPERATURE SENSOR
SONDE DE TEMPERATURE INTERIEURE
RAUMTEMPERATURSENSOR
SENSORE DI TEMPERATURA INTERIORE
CAPTADOR DETEMPERATURA INTERIOR

[B] OUTSIDE TEMPERATURE SENSOR
SONDE DE TEMPERATURE EXTERIEURE
AUSSENTEMPERATURSENSOR
SENSORE DI TEMPERATURA ESTERIORE
CAPTADOR DETEMPERATURA EXTERIOR

[C] SOLAR SENSOR
CAPTEUR SOLAIRE
SONNEN SENSOR
SENSORE SOLARE
SENSOR SOLAR

90

Electronic Lift	Main Harness	90-5	
Relevage Electronique	Faisceau Principal		
Electron Aushebg	Hauplkabelbaum		
Sollevatore Elettronico	Cavi Principali		
Levante Hidraulico	Arnes Principal		

1-WP33-029-B

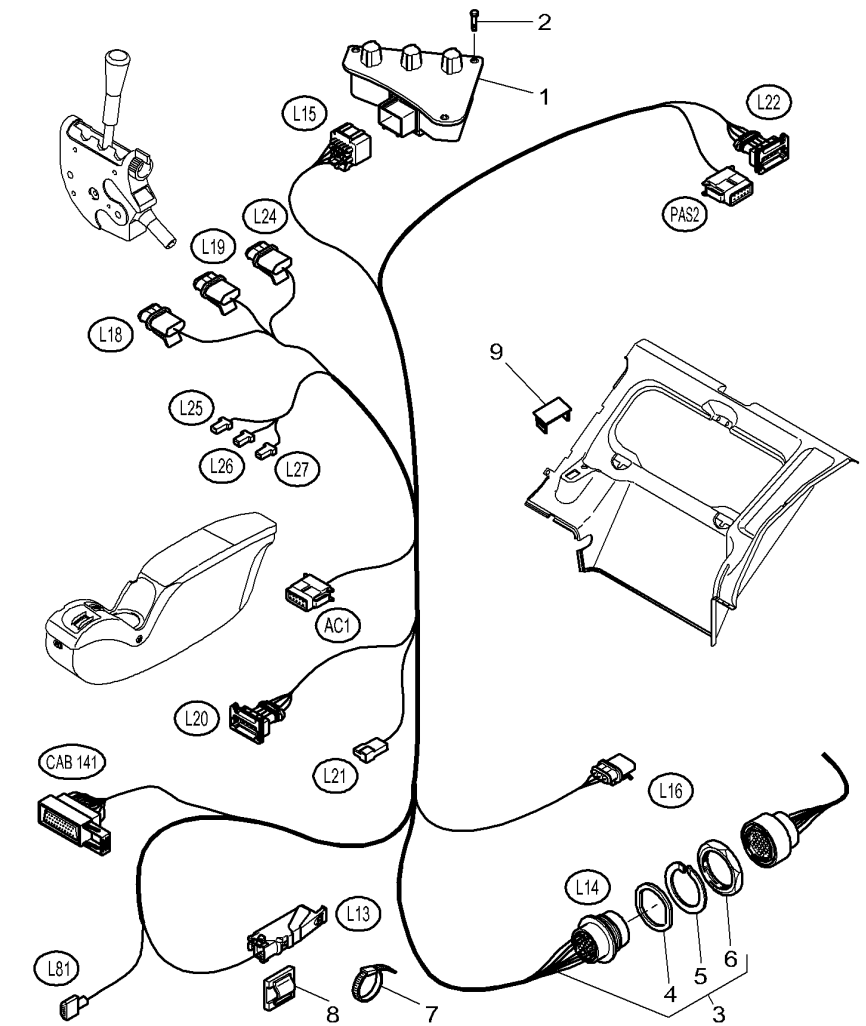

1*	4278661M93	[A] 👁 90-20 No 1	**1**	ELECTRON CONSOLE	CONSOLE ELECTRON CONSOLLE ELETT.	ELECTRON-KONSOLE CONSOLA ELECTRON
2	3010506X1	M5 X 16	**4**	SCREW	VIS VITE	SCHRAUBE TORNILLO
2	3010804X1	M4 X 16	**4**	SCREW	VIS VITE	SCHRAUBE TORNILLO
3*	4280994M2		**1**	HARNESS	FAISCEAU FASCIOCAVI	KABELBAUM MAZO CABLES
4	3013355X1	3	**1**	SEAL	JOINT ETANCHEITE GIUNTO ROTONDO	DICHTRING JUNTA REDONDA
5	3013354X1	3	**1**	WASHER	RONDELLE RONDELLA	SCHEIBE ARANDELA
6	3013353X1	3	**1**	NUT	ECROU DADO	MUTTER TUERCA
7	3619622M1		**X**	CABLE TIE	ATTACHE CABLE FASCETTA CAVI	KABELBINDER APRIETACABLES
8	3582094M1		**2**	TIE	ATTACHE TRAVERSA ATTACCO	ANBINDUNG BARRA DE ENLACE
9	3713151M1		**1**	TAP	OBTURATEUR. TAPPO*	HAHN GRIFO

[A] WITHOUT RADAR
SANS RADAR
OHNE RADAR
SIN RADAR
SENZA RADAR

Electronic Lift **Relevage Electronique** **Electron Aushebg** **Sollevatore Elettronico** **Levante Hidraulico**	**Main Harness** **Faisceau Principal** **Hauplkabelbaum** **Cavi Principali** **Arnes Principal**	**90-10**	**With Dual Control - Up To R298036** **Avec Dual Control - Jusqu Au R298036** **Mit Dual Control - Bis R298036** **Con Dual Control - Fino Alla R298036** **Con Dual Control - Hasta R298036**

1-WP33-016-A

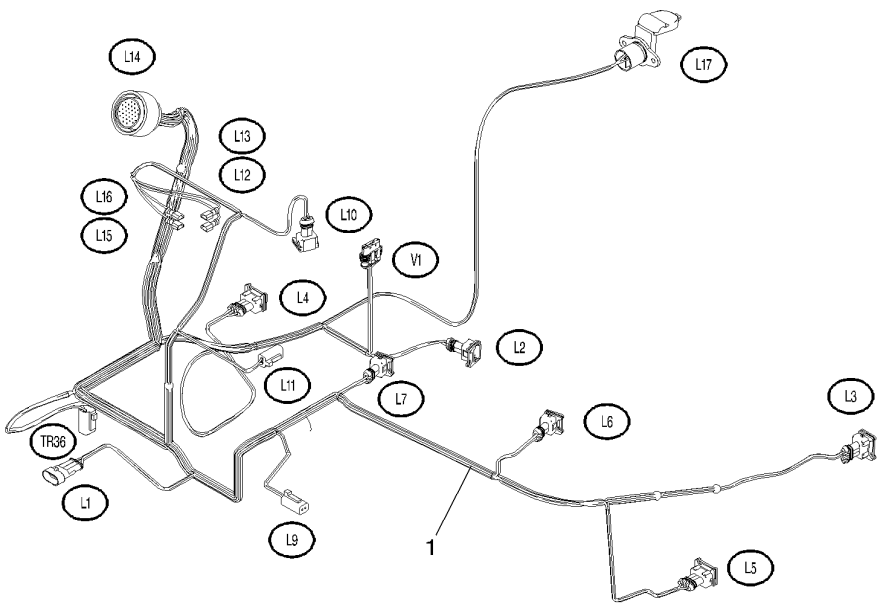

1*	4277437M95	**1**	HARNESS	FAISCEAU FASCIOCAVI	KABELBAUM MAZO CABLES

Electronic Lift **Relevage Electronique** **Electron Aushebg** **Sollevatore Elettronico** **Levante Hidraulico**	**Main Harness** **Faisceau Principal** **Hauplkabelbaum** **Cavi Principali** **Arnes Principal**	**90-15**	**With Dual Control - From R298037** **Avec Dual Control - A Partir Du R298037** **Mit Dual Control - Ab R298037** **Con Dual Control - Dalla R298037** **Con Dual Control - A Partir Del R298037**

1-WP33-038-A

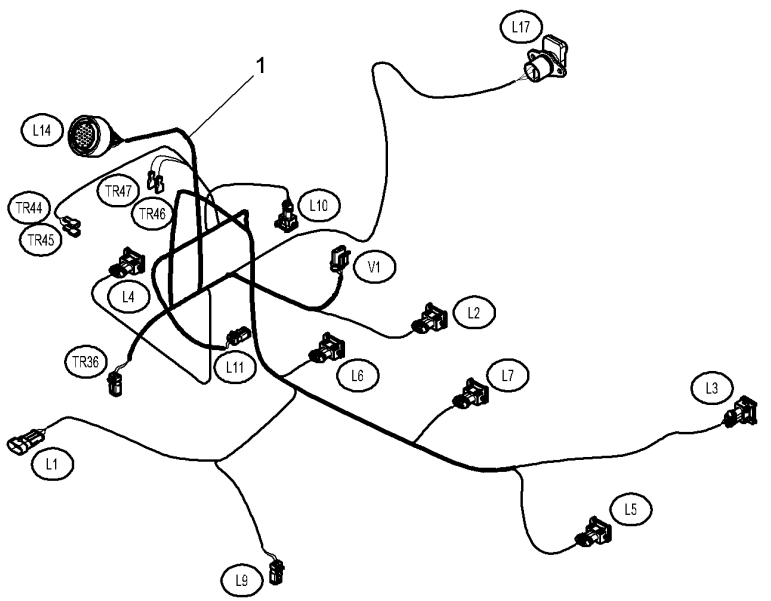

1	* 4287063M1	**1** HARNESS	FAISCEAU FASCIOCAVI	KABELBAUM MAZO CABLES

Electronic Lift	**Console**	**90-20**	**Without Radar**
Relevage Electronique	**Console**		**Sans Radar**
Elektron-Aushbg	**Konsole**		**Ohne Radar**
Sollevatore Elettronico	**Pannello**		**Senza Radar**
Levante Electronico	**Consola**		**Sin Radar**

1-WP10-005-B

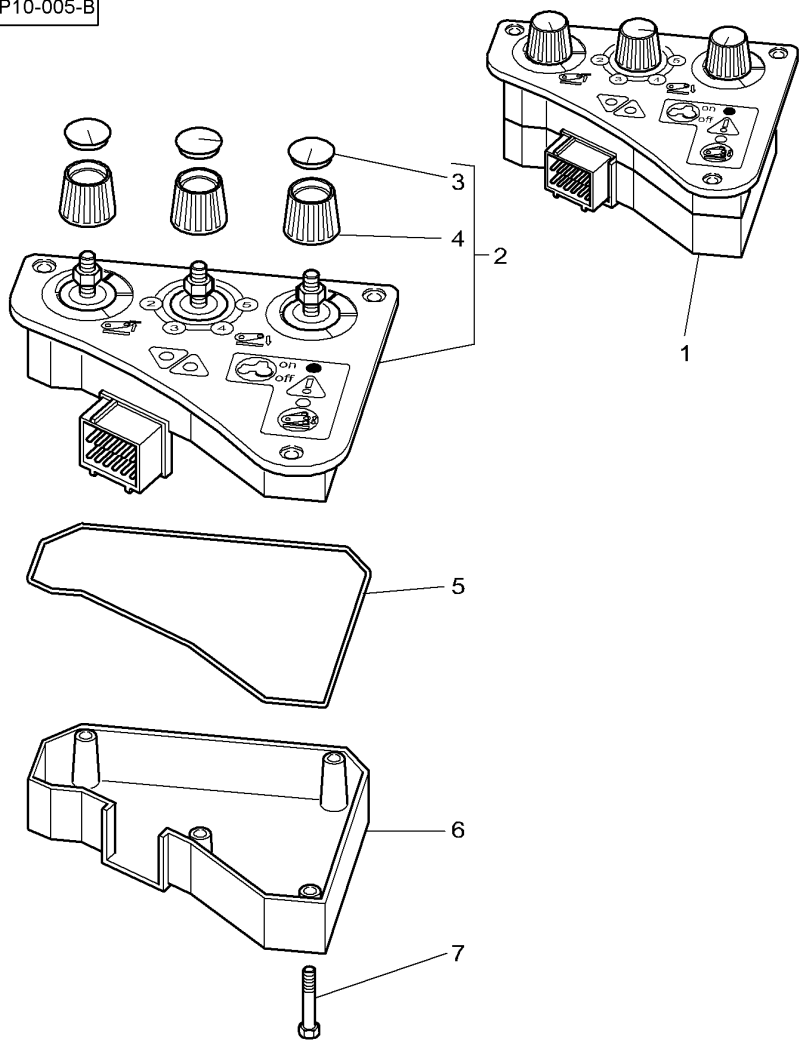

1	* 4278661M93		**1**	ELECTRON CONSOLE	CONSOLE ELECTRON CONSOLLE ELETT.	ELECTRON-KONSOLE CONSOLA ELECTRON
2		1 REF. 1	**1**	CASE ASSY	BOITIER CARCASSA COMPLET	GEHAEUSE KPL CAJA COMPLETA
3	3902440M1	2	**3**	HELMET	CAPUCHON CASCO	SCHUTZHELM CASCO
4	* 3903452M1	2 R258041	**3**	BUTTON	BOUTON BOTTONE	KNOPFTASTE BOTON
4	* 3907831M1	2 R258042	**3**	BUTTON	BOUTON BOTTONE	KNOPFTASTE BOTON
5	3907250M1	1	**1**	SEAL	JOINT ETANCHEITE GIUNTO ROTONDO	DICHTRING JUNTA REDONDA
6		1 REF. 1	**1**	CASE ASSY	BOITIER CARCASSA COMPLET	GEHAEUSE KPL CAJA COMPLETA
7		1 [A]	**4**	SCREW	VIS VITE	SCHRAUBE TORNILLO

[A] NOT DETAILLED
PAS DETAILLE
NICHT VERKAUFT
PASSO DETTAGLIATO
NO DETALLADO

Aboard Computer And Plate Lighting Equipement
Ordinateur De Bord & Platine D'Eclairage
Bord. Computer Und Beleuchtungsanlage Plate
Panello Computer I Placa Equipaggiamento Illuminazione
Computador A Bordo Y Placa Equipo Alumbrado

90-25

1-WU31-003-D

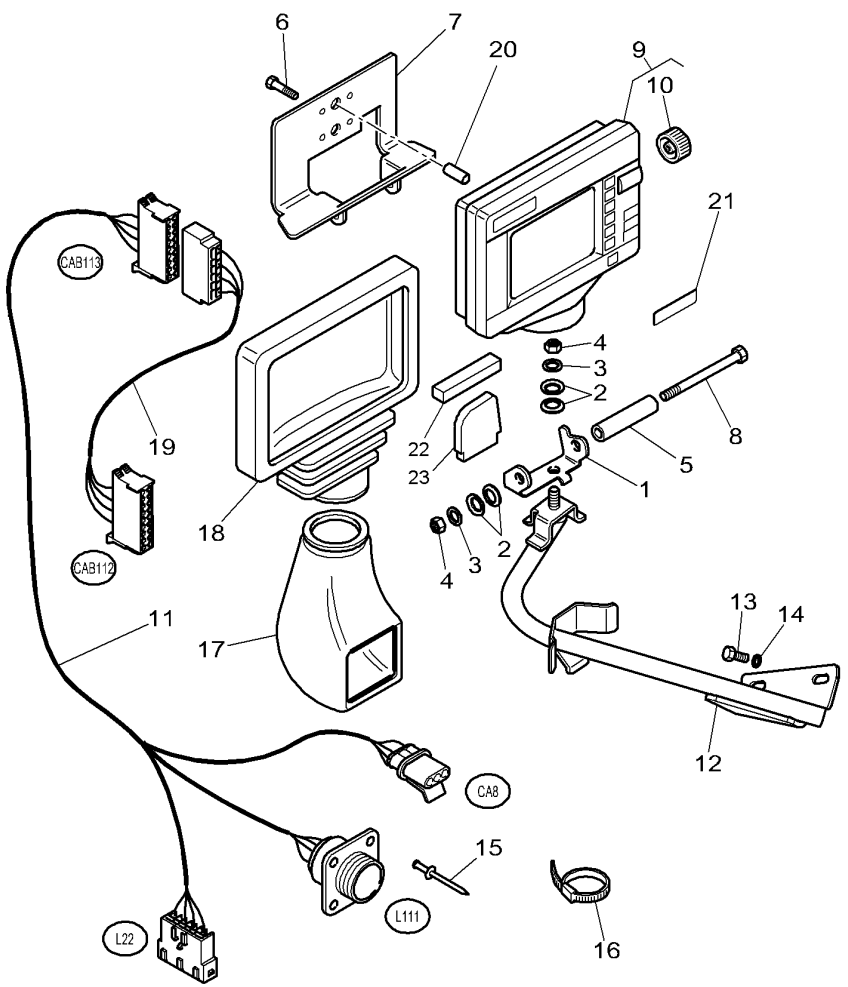

1	4277643M1		**1**	SUPPORT	SUPPORT SOPPORTO	TRAGER SOPORTE
2	3386192M1	∅ 8-26	**4**	WASHER	RONDELLE RONDELLA	SCHEIBE ARANDELA
3	3010467X1	∅ 9-30 X 2	**2**	WASHER	RONDELLE RONDELLA	SCHEIBE ARANDELA
3	390972X1	∅ 8-17 X 1,7	**2**	FLAT WASHER	RONDELLE PLATE RONDELLE PIANA	UNTERLEGSCHEIBEN ARANDELA PLANA
4	394367X1	M8	**2**	NUT	ECROU DADO	MUTTER TUERCA
5	3712867M1	∅ 9-12 X 74	**1**	SPACER	ENTRETOISE DISTANZIALE	ABSTANDSTUECK DISCO ESPACIADOR
6	339721X1	M5 X 16	**4**	HEX. SOCK. SCREW	VIS TETE HEX VITE PARKER	ZYLINDERSCHRAUBE TORN.CAB.HUECA
7	4277644M1		**1**	SUPPORT	SUPPORT SOPPORTO	TRAGER SOPORTE
8	339013X1	M8 X 110	**1**	HEX. SOCK. SCREW	VIS TETE HEX VITE PARKER	ZYLINDERSCHRAUBE TORN.CAB.HUECA
9*	4277459M98	[B]	**1**	ONBOARD COMPUTOR	ORDINATEURDEBORD COMPUT.DI BORDO	BORDCOMPUTER ORDENADOR A BORD
9*	4277461M92	[C]	**1**	ONBOARD COMPUTOR	ORDINATEURDEBORD COMPUT.DI BORDO	BORDCOMPUTER ORDENADOR A BORD
10	3907557M1	9	**1**	BUTTON	BOUTON BOTTONE	KNOPFTASTE BOTON
11	4280179M1		**1**	HARNESS	FAISCEAU FASCIOCAVI	KABELBAUM MAZO CABLES
12	4277640M91		**1**	TUBE	TUBE TUBO.	ROHR TUBO.
13	339123X1	M8 X 20	**2**	HEX. SOCK. SCREW	VIS TETE HEX VITE PARKER	ZYLINDERSCHRAUBE TORN.CAB.HUECA
14	390972X1	∅ 8-17 X 1,7	**2**	FLAT WASHER	RONDELLE PLATE RONDELLE PIANA	UNTERLEGSCHEIBEN ARANDELA PLANA
15	3011214X1		**4**	RIVET	RIVET RIVETTO	NIET REMACHE
16	3619622M1		**10**	CABLE TIE	ATTACHE CABLE FASCETTA CAVI	KABELBINDER APRIETACABLES
17*	4278794M91		**1**	BELLOWS	SOUFFLET SOFFIETTO	FALTENBALG FUELLE
18*	4278791M91		**1**	BELLOWS	SOUFFLET SOFFIETTO	FALTENBALG FUELLE
19*	4277219M94		**1**	HARNESS	FAISCEAU FASCIOCAVI	KABELBAUM MAZO CABLES
20	3011600X1	∅ 7-10,5 mm	**4**	SPACER	ENTRETOISE DISTANZIALE	ABSTANDSTUECK DISCO ESPACIADOR
21*	4277474M1		**1**	DECAL	DECALCOMANIE DECALCOMANIA	AUFKLEBER CALCOMANIA
22*			**X**	NOT USED	NON UTILISE INUSATO	NICHT VERWENDET NO SE USA
23*	3778706M1		**1**	PAD	TAMPON TAMPONE	KLOTZ ALMOHADILLA

Aboard Computer And Plate Lighting Equipement
Ordinateur De Bord & Platine D'Eclairage
Bord. Computer Und Beleuchtungsanlage Plate
Panello Computer I Placa Equipaggiamento Illuminazione
Computador A Bordo Y Placa Equipo Alumbrado

90-25

1-WU31-003-D

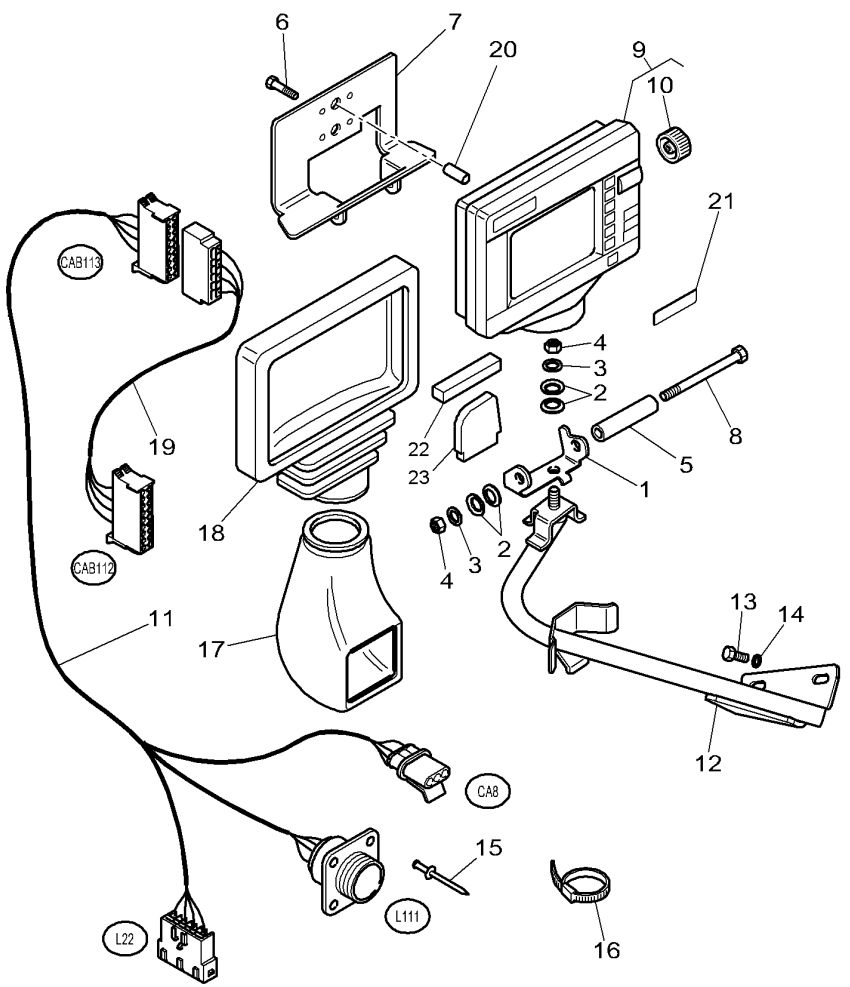

[B] COLOR SCREEN
ECRAN COULEUR
FARBBILDSCHIRM
SCHERMO COLORE
PANTALLA COLOR

[C] VIDEO COLOR SCREEN AND ENTREE
ECRAN COULEUR ET ENTREE VIDEO
FARBBILDSCHIRM HINEINGEGANGENE VIDEOFARBE UND
SCHERMO COLORE ED ENTRATO VIDEO
PANTALLA COLOR Y ENTRADO VIDEO

Aboard Computer And Plate Lighting Equipement
Ordinateur De Bord & Platine D'Eclairage
Bord. Computer Und Beleuchtungsanlage Plate
Panello Computer I Placa Equipaggiamento Illuminazione
Computador A Bordo Y Placa Equipo Alumbrado

90-30

1-WU31-004-A

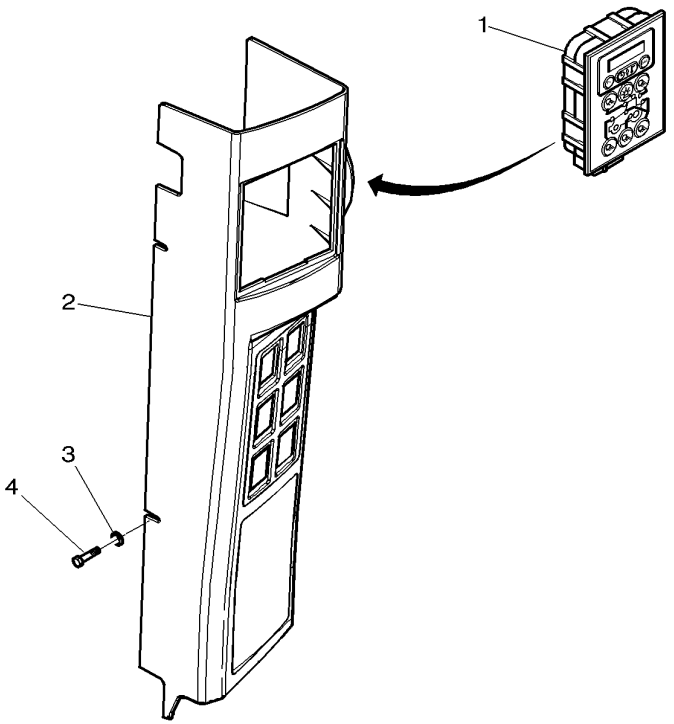

1*	3786382M3	90-35 No 1 R166075	**1** MODULE	MODULE MODULO	MODUL MODULO
1*	4282981M1	90-35 No 1 US R166076	**1** MODULE	MODULE MODULO	MODUL MODULO
1*	3786383M3	90-35 No 1 US R185071	**1** MODULE	MODULE MODULO	MODUL MODULO
1*	4282980M1	90-35 No 1 US R185072	**1** MODULE	MODULE MODULO	MODUL MODULO
2		110-70 No 14	**1** MOUNTING	MONTANT SUPPORTO MONTAGG	HALTERUNG MONTANTE
3	390469X1	∅ 5-10 X 1,5	**4** FLAT WASHER	RONDELLE PLATE RONDELLE PIANA	UNTERLEGSCHEIBEN ARANDELA PLANA
4	3010578X1	M5 X 10	**4** SCREW	VIS VITE	SCHRAUBE TORNILLO

Aboard Computer And Plate Lighting Equipement
Ordinateur De Bord & Platine D'Eclairage
Bord. Computer Und Beleuchtungsanlage Plate
Panello Computer I Placa Equipaggiamento Illuminazione
Computador A Bordo Y Placa Equipo Alumbrado

90-35

1-WU31-002-A

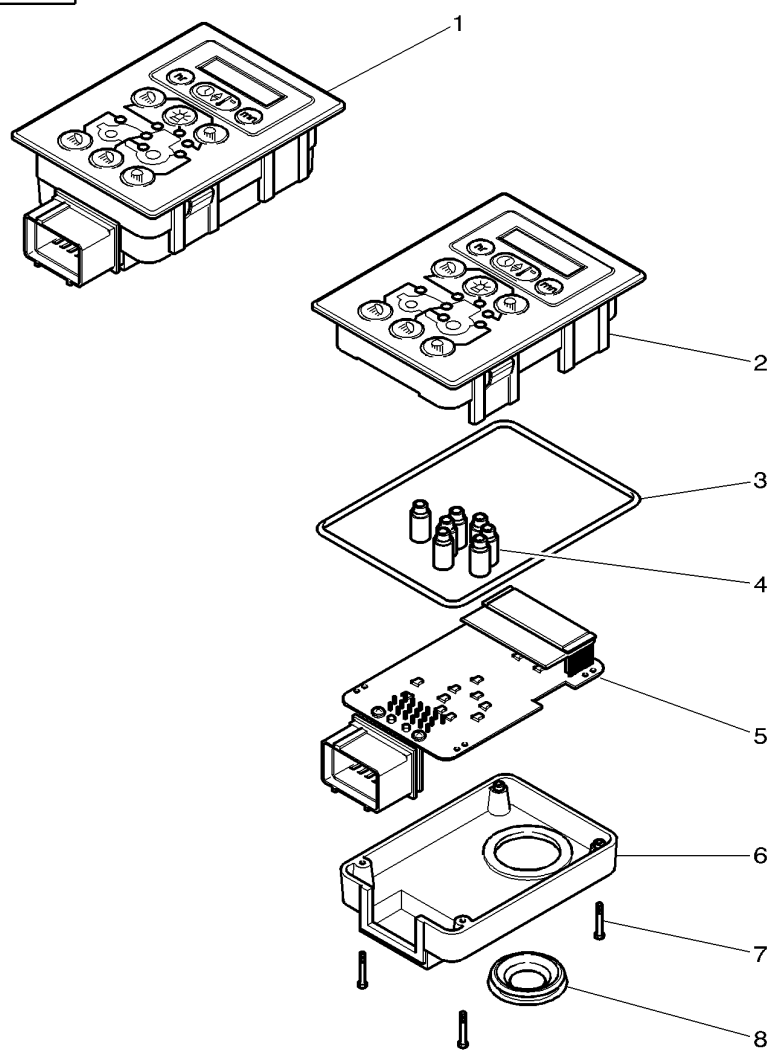

1	3786382M3		R166075	**1**	MODULE	MODULE MODULO	MODUL MODULO
1*	4282981M1		R166076	**1**	MODULE	MODULE MODULO	MODUL MODULO
1	3786383M3	US	R185071	**1**	MODULE	MODULE MODULO	MODUL MODULO
1*	4282980M1	US	R185072	**1**	MODULE	MODULE MODULO	MODUL MODULO
2*	3907252M91	1 US		**1**	CASE ASSY	BOITIER CARCASSA COMPLET	GEHAEUSE KPL CAJA COMPLETA
2*	3907256M91	1		**1**	CASE ASSY	BOITIER CARCASSA COMPLET	GEHAEUSE KPL CAJA COMPLETA
3	3907253M1	1		**1**	SEAL	JOINT ETANCHEITE GIUNTO ROTONDO	DICHTRING JUNTA REDONDA
4		1 [A]	REF. 1	**7**	GUIDE	GUIDE GUIDA	FUEHRUNG GUIA
5		1	REF. 1	**1**	PRINTED CIRCUIT	CIRCUIT IMPRIME CIRCUITO STAMP.	GEDRUCKTESCHALTG CIRCUITO IMPRESO
6		1 [A]	REF. 1	**1**	CASE ASSY	BOITIER CARCASSA COMPLET	GEHAEUSE KPL CAJA COMPLETA
7		1 [A]	REF. 1	**4**	SCREW	VIS VITE	SCHRAUBE TORNILLO
8	3907255M1	1		**1**	HELMET	CAPUCHON CASCO	SCHUTZHELM CASCO

[A] NOT DETAILLED
PAS DETAILLE
NICHT VERKAUFT
PASSO DETTAGLIATO
NO DETALLADO

Radar
Radar
Radar
Radar
Radar

90-40

1-WU34-004-A

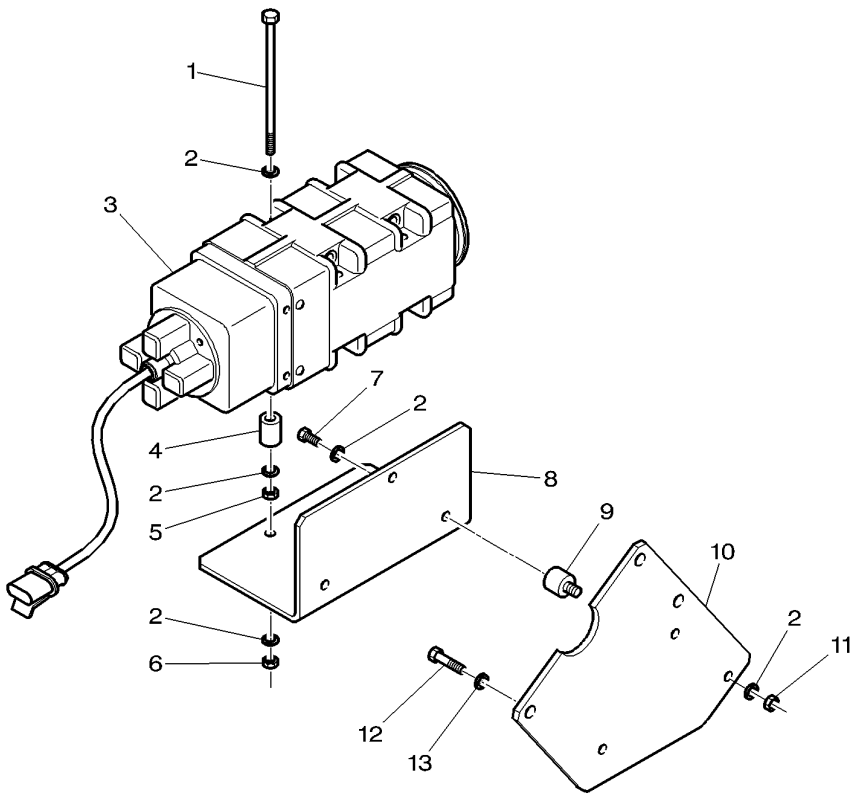

1	3019894X1	M6 X 100	**4**	HEX. SOCK. SCREW	VIS TETE HEX VITE PARKER	ZYLINDERSCHRAUBE TORN.CAB.HUECA
2	390971X1	∅ 6-12 X 1,5	**12**	FLAT WASHER	RONDELLE PLATE RONDELLE PIANA	UNTERLEGSCHEIBEN ARANDELA PLANA
3	3714291M2	[A] GHZ 24.125 ➡ R093058 ➡ R341019	**1**	SPEED DETECTOR	DETECTEURVITESSE RILEV.VELOCITA'	GESCHW.-ANZEIGER DETECTOR VELOC.
3*	3714291M2	[A] GHZ 24.125 ➡ S051016	**1**	SPEED DETECTOR	DETECTEURVITESSE RILEV.VELOCITA'	GESCHW.-ANZEIGER DETECTOR VELOC.
4	3582802M1	∅ 8-16 X 22	**4**	SPACER	ENTRETOISE DISTANZIALE	ABSTANDSTUECK DISCO ESPACIADOR
5	1440207X1	M6	**4**	NUT METRIC	ECROU METRIQUE DADO METRICO	MUTTER METRISCH TUERCA METRICO
6	339030X1	M6	**7**	NUT	ECROU DADO	MUTTER TUERCA
7	339230X1	M6 X 10	**3**	HEX. SOCK. SCREW	VIS TETE HEX VITE PARKER	ZYLINDERSCHRAUBE TORN.CAB.HUECA
8	3781310M1		**1**	SUPPORT	SUPPORT SOPPORTO	TRAGER SOPORTE
9	3583548M1		**3**	DOWEL	PLOT SPINA	ZYLINDERSTIFT CENTRAJE
10	4277540M2		**1**	SUPPORT	SUPPORT SOPPORTO	TRAGER SOPORTE
11	339030X1	M6	**3**	NUT	ECROU DADO	MUTTER TUERCA
12	339123X1	M8 X 20	**3**	HEX. SOCK. SCREW	VIS TETE HEX VITE PARKER	ZYLINDERSCHRAUBE TORN.CAB.HUECA
13	390972X1	∅ 8-17 X 1,7	**3**	FLAT WASHER	RONDELLE PLATE RONDELLE PIANA	UNTERLEGSCHEIBEN ARANDELA PLANA

[A] THE APPROPRIATE SAFETY DECALS MUST BE ORDERED AND FITTED TO THIS PART
CETTE PIECE DOIT ETRE IMPERATIVEMENT COMMANDEE AVEC SA DECALCOMANIE DE SECURITE
DIESES TEIL MUSS UNBEDINGT ZUSAMMEN MIT DEM SICHER HEITSHINWEISSCHILD BESTELLT WERDEN
QUESTA PARTE DEVE ESSERE IMPERATIVAMENTO COMANDATA CON LA SUA DECALCOMANIA SICUREZZA
ESTA PARTE DEBE ENCARGARSE IMPERATIVAMENTE CON SU CALCOMANIA DE SEGURIDAD

Radar
Radar
Radar
Radar
Radar

90-45

1-WU34-010-A

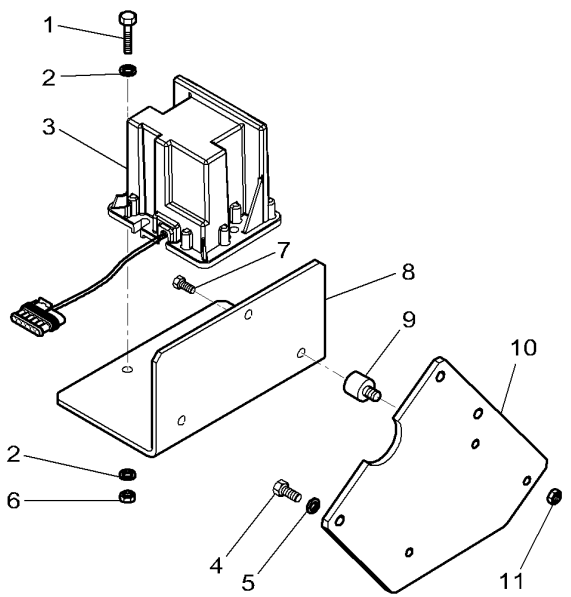

1	339804X1	M6 X 25	**2** HEX. SOCK. SCREW	VIS TETE HEX VITE PARKER	ZYLINDERSCHRAUBE TORN.CAB.HUECA
2	390971X1	∅ 6-12 X 1,5	**4** FLAT WASHER	RONDELLE PLATE RONDELLE PIANA	UNTERLEGSCHEIBEN ARANDELA PLANA
3	4282089M1	[A] GHZ 24.125 ➡ R093059 ➡| R341018	**1** SPEED DETECTOR	DETECTEURVITESSE RILEV.VELOCITA'	GESCHW.-ANZEIGER DETECTOR VELOC.
3*	4282089M1	[A] GHZ 24.125 ➡ S051017	**1** SPEED DETECTOR	DETECTEURVITESSE RILEV.VELOCITA'	GESCHW.-ANZEIGER DETECTOR VELOC.
4	339123X1	M8 X 20	**3** HEX. SOCK. SCREW	VIS TETE HEX VITE PARKER	ZYLINDERSCHRAUBE TORN.CAB.HUECA
5	390972X1	∅ 8-17 X 1,7	**3** FLAT WASHER	RONDELLE PLATE RONDELLE PIANA	UNTERLEGSCHEIBEN ARANDELA PLANA
6	339030X1	M6	**2** NUT	ECROU DADO	MUTTER TUERCA
7	339230X1	M6 X 10	**3** HEX. SOCK. SCREW	VIS TETE HEX VITE PARKER	ZYLINDERSCHRAUBE TORN.CAB.HUECA
8	3781310M1		**1** SUPPORT	SUPPORT SOPPORTO	TRAGER SOPORTE
9	3583548M1		**3** DOWEL	PLOT SPINA	ZYLINDERSTIFT CENTRAJE
10	4277540M2		**1** SUPPORT	SUPPORT SOPPORTO	TRAGER SOPORTE
11	339030X1	M6	**3** NUT	ECROU DADO	MUTTER TUERCA

[A] THE APPROPRIATE SAFETY DECALS MUST BE ORDERED AND FITTED TO THIS PART
CETTE PIECE DOIT ETRE IMPERATIVEMENT COMMANDEE AVEC SA DECALCOMANIE DE SECURITE
DIESES TEIL MUSS UNBEDINGT ZUSAMMEN MIT DEM SICHER HEITSHINWEISSCHILD BESTELLT WERDEN
QUESTA PARTE DEVE ESSERE IMPERATIVAMENTO COMANDATA CON LA SUA DECALCOMANIA SICUREZZA
ESTA PARTE DEBE ENCARGARSE IMPERATIVAMENTE CON SU CALCOMANIA DE SEGURIDAD

Harness "Isobus"
Faisceau "Isobus"
Kabelnezt "Isobus"
Fasciocavi "Isobus"
Haz De Hilos "Isobus"

90-50

PLANCHES EN COURS D'ILLUSTRATION

1*	4287357M92		**1**	HARNESS	FAISCEAU FASCIOCAVI	KABELBAUM MAZO CABLES
2*	3387320M1	1 10 AMP	**1**	FUSE	FUSIBLE FUSIBILE	SICHERUNG FUSIBLE
3*	**4271803M1**	1 50 AMP	**1**	FUSE	FUSIBLE FUSIBILE	SICHERUNG FUSIBLE
4*	3013377X1	1	**2**	FUSE HOLDER	PORTE FUSIBLE PORTA FUSIBILI	SICHERUNGSHALTER PORTAFUSIBLE
5*	4287356M1	1 60 AMP	**1**	FUSE	FUSIBLE FUSIBILE	SICHERUNG FUSIBLE
6*	4287875M1	1	**1**	INTAKE	PRISE ASPIRAZIONE	SAUGROHR ENTRADA
7*	4284155M1	1	**1**	RESISTOR	RESISTANCE RESISTORE	WIDERSTAND RESISTENCIA
8*	4287339M1		**1**	RELAY	RELAIS RELE	RELAIS RELE
9*	4287334M1		**1**	SUPPORT	SUPPORT SOPPORTO	TRAGER SOPORTE
10*	1441494X1		**1**	NUT METRIC	ECROU METRIQUE DADO METRICO	MUTTER METRISCH TUERCA METRICO
11*	4278720M1		**1**	TIE	ATTACHE TRAVERSA ATTACCO	ANBINDUNG BARRA DE ENLACE
12*	339804X1	M6 X 25	**2**	HEX. SOCK. SCREW	VIS TETE HEX VITE PARKER	ZYLINDERSCHRAUBE TORN.CAB.HUECA
13*	4288301M1		**1**	SUPPORT	SUPPORT SOPPORTO	TRAGER SOPORTE
14*	1440350X1	M6 X 20	**4**	SCREW METRIC	VIS METRIQUE VITE METRICA	SCHRAUBE METR TORNILLO METRICO
15*	339160X1	M5 X 10	**3**	HEX. SOCK. SCREW	VIS TETE HEX VITE PARKER	ZYLINDERSCHRAUBE TORN.CAB.HUECA
16*	4277206M1	➡| R300051	**1**	GROMMET	PASSE FIL ANELLO PASSACAVO	GUMMITUELLE PASACABLE
17*	4290362M1	➡ S082011	**1**	DECAL	DECALCOMANIE DECALCOMANIA	AUFKLEBER CALCOMANIA

1-WU38-001-A

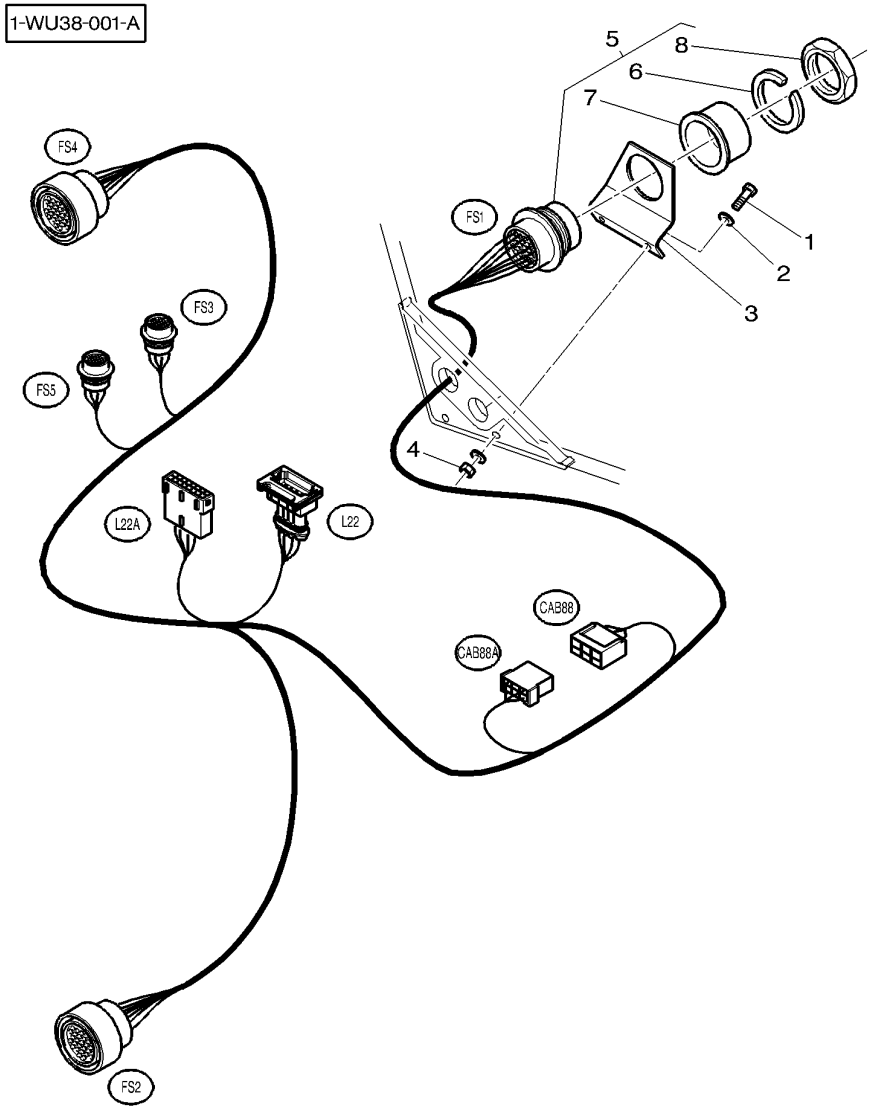

1	339666X1	M6 X 20	**2**	HEX. SOCK. SCREW	VIS TETE HEX VITE PARKER	ZYLINDERSCHRAUBE TORN.CAB.HUECA
2	390971X1	∅ 6-12 X 1,5	**4**	FLAT WASHER	RONDELLE PLATE RONDELLE PIANA	UNTERLEGSCHEIBEN ARANDELA PLANA
3	4276068M1		**1**	SUPPORT	SUPPORT SOPPORTO	TRAGER SOPORTE
4	339030X1	M6	**2**	NUT	ECROU DADO	MUTTER TUERCA
5	4275724M2		**1**	HARNESS	FAISCEAU FASCIOCAVI	KABELBAUM MAZO CABLES
6	3013354X1	5	**1**	WASHER	RONDELLE RONDELLA	SCHEIBE ARANDELA
7	3013356X1	5	**1**	PLUG	BOUCHON TAPPO	STOPFEN TAPON
8	3013353X1	5	**1**	NUT	ECROU DADO	MUTTER TUERCA

Front Axle Suspended Harness / Control Box
Faisceau Pont Avant Suspendu / Boite De Controle
Gefedert Vorderaschse Kabel / Steuergeraet
Cavi De Assale Anteriore Sospeso / Scatola Controllo
Mazo Cables De Eje Delantero Suspendido / Caja De Cont **Rol**

90-60

1-WW10-002-A

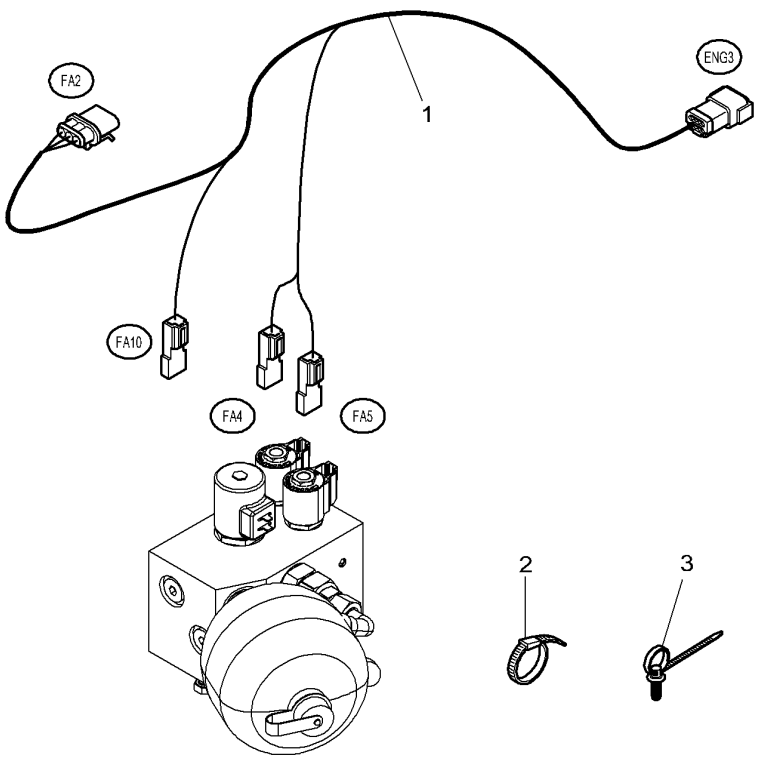

1	4281605M1	**1**	HARNESS	FAISCEAU FASCIOCAVI	KABELBAUM MAZO CABLES
2	3619622M1	**X**	CABLE TIE	ATTACHE CABLE FASCETTA CAVI	KABELBINDER APRIETACABLES
3	4278314M1	**X**	CLAMP	COLLIER FASCETTA	HALTESCHELLE ABRAZADERA

Control Box	**Cab**	**90-65**	**With Autotronic 5**
Boite De Controle	**Cabine**		**Avec Autotronic 5**
Steuergeraet	**Kabine**		**Mit Autotronic 5**
Scatola Controllo	**Cabina**		**Con Autotronic 5**
Caja De Control	**Cabina**		**Con Autotronic 5**

1-WU36-010-A

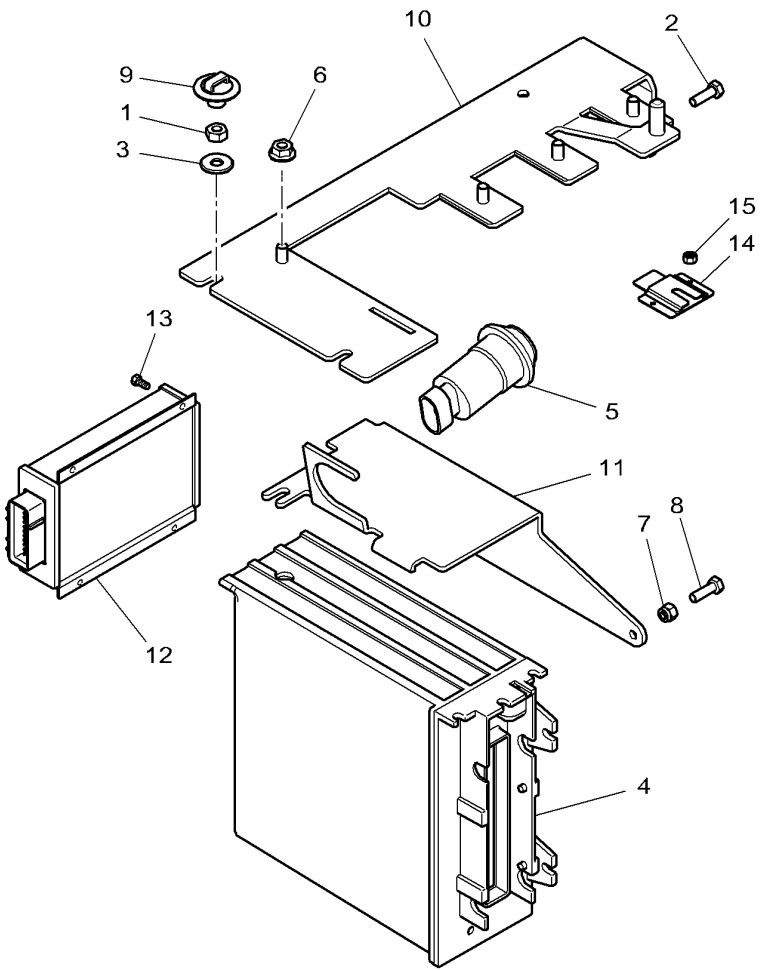

1	339030X1	M6	**2**	NUT	ECROU DADO	MUTTER TUERCA
2	339560X1	M6 X 16	**1**	HEX. SOCK. SCREW	VIS TETE HEX VITE PARKER	ZYLINDERSCHRAUBE TORN.CAB.HUECA
3	391038X1		**2**	FLAT WASHER	RONDELLE PLATE RONDELLE PIANA	UNTERLEGSCHEIBEN ARANDELA PLANA
4*	G701970070018	⇒ G701970070016 ⇒ G701970070017	**1**	ELECTRONIC BOX	BOITE ELECTRONIC UNITA ELETTRONIC	ELECTRONIKBOX CAJA ELECTRONICA
5	**G716970160030**		**1**	PRESSURE SWITCH	MANO CONTACT PRESSOSTATO	DRUCKSCHALTER INTERRUP PRESION
6	3019123X1	M6	**1**	NUT	ECROU DADO	MUTTER TUERCA
7	1441494X1	M5	**2**	NUT METRIC	ECROU METRIQUE DADO METRICO	MUTTER METRISCH TUERCA METRICO
8	339721X1	M5 X 16	**2**	HEX. SOCK. SCREW	VIS TETE HEX VITE PARKER	ZYLINDERSCHRAUBE TORN.CAB.HUECA
9	4278720M1		**2**	TIE	ATTACHE TRAVERSA ATTACCO	ANBINDUNG BARRA DE ENLACE
10*	4278995M1		**1**	SUPPORT	SUPPORT SOPPORTO	TRAGER SOPORTE
11*	4278997M1		**1**	SUPPORT	SUPPORT SOPPORTO	TRAGER SOPORTE
12*	3796241M97		**1**	SWITCH BOX	BOITE CDE ELECTR SCATOLA INTERRUT	SCHALTKASTEN CAJA DE INTERRUP
13	3010804X1	M4 X 16	**4**	SCREW	VIS VITE	SCHRAUBE TORNILLO
13	3010506X1	M5 X 16	**4**	SCREW	VIS VITE	SCHRAUBE TORNILLO
14	4278996M1		**1**	SUPPORT	SUPPORT SOPPORTO	TRAGER SOPORTE
15	3019123X1		**2**	NUT	ECROU DADO	MUTTER TUERCA

Control Box Harness & Cab Controls
Faisceau Boite De Controle & Commandes Cabine
Steuergeraet Kabel Und Kabineantriebe
Cavi Scatola Controllo E Commando De La Cabina
Mazo Cables Caja De Control Y Mando Del Cabina

90-70

With Autotronic 5
Avec Autotronic 5
Mit Autotronic 5
Con Autotronic 5
Con Autotronic 5

1-WW09-003-B

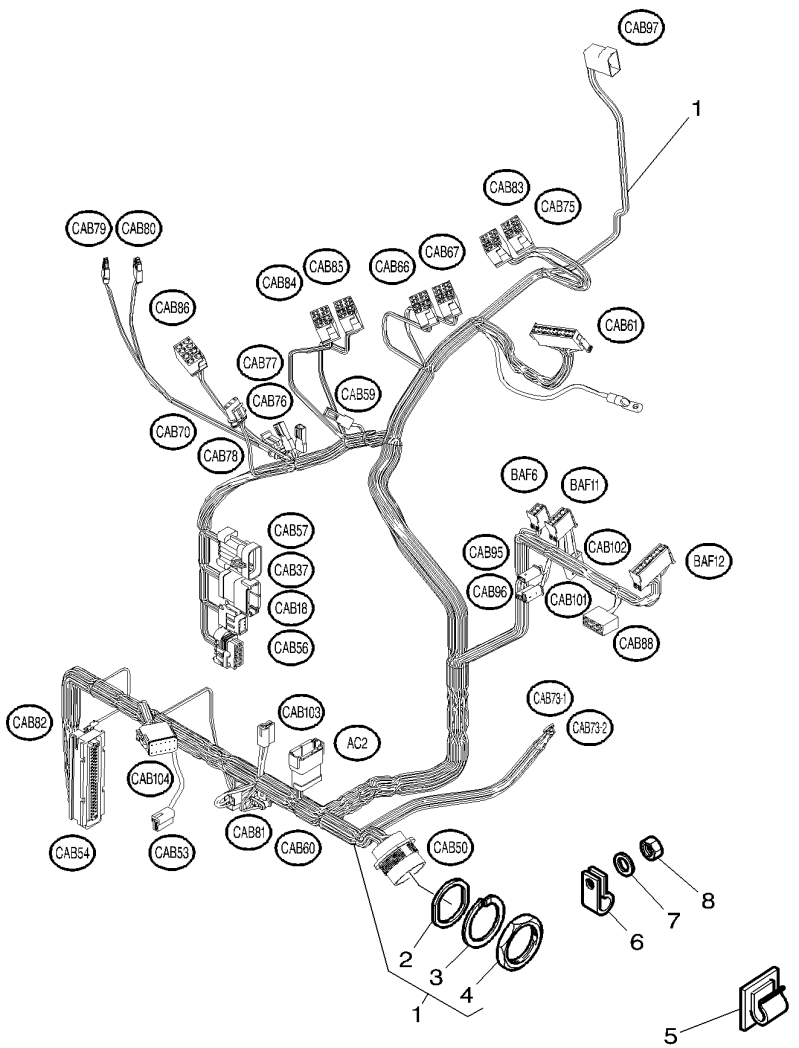

1	4276763M92		**1**	HARNESS	FAISCEAU FASCIOCAVI	KABELBAUM MAZO CABLES
2	3013355X1	1	**1**	SEAL	JOINT ETANCHEITE GIUNTO ROTONDO	DICHTRING JUNTA REDONDA
3	3013354X1	1	**1**	WASHER	RONDELLE RONDELLA	SCHEIBE ARANDELA
4	3013353X1	1	**1**	NUT	ECROU DADO	MUTTER TUERCA
5	3582094M1		**2**	TIE	ATTACHE TRAVERSA ATTACCO	ANBINDUNG BARRA DE ENLACE
6	3389841M1	∅ 12 - M6	**1**	CLIP	PATTE D'ATTACHE FERMAGLIO	SCHELLE CLIP
7	390971X1	∅ 6-12 X 1,5	**1**	FLAT WASHER	RONDELLE PLATE RONDELLE PIANA	UNTERLEGSCHEIBEN ARANDELA PLANA
8	339030X1	M6	**1**	NUT	ECROU DADO	MUTTER TUERCA

Control Box Harness & Cab Controls
Faisceau Boite De Controle & Commandes Cabine
Steuergeraet Kabel Und Kabineantriebe
Cavi Scatola Controllo E Commando De La Cabina
Mazo Cables Caja De Control Y Mando Del Cabina

90-75

1-WW09-006-A

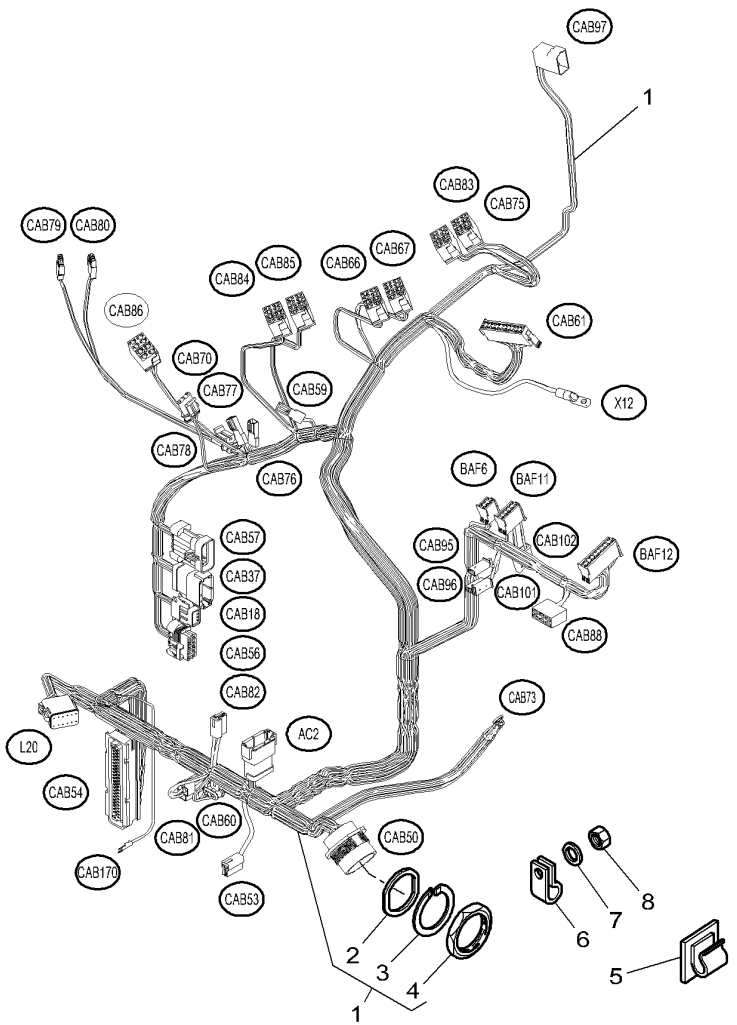

1	4280949M1		**1**	HARNESS	FAISCEAU FASCIOCAVI	KABELBAUM MAZO CABLES
2	3013355X1	1	**1**	SEAL	JOINT ETANCHEITE GIUNTO ROTONDO	DICHTRING JUNTA REDONDA
3	3013354X1	1	**1**	WASHER	RONDELLE RONDELLA	SCHEIBE ARANDELA
4	3013353X1	1	**1**	NUT	ECROU DADO	MUTTER TUERCA
5	3582094M1		**2**	TIE	ATTACHE TRAVERSA ATTACCO	ANBINDUNG BARRA DE ENLACE
6	3389841M1	∅ 12 - M6	**1**	CLIP	PATTE D'ATTACHE FERMAGLIO	SCHELLE CLIP
7	390971X1	∅ 6-12 X 1,5	**1**	FLAT WASHER	RONDELLE PLATE RONDELLE PIANA	UNTERLEGSCHEIBEN ARANDELA PLANA
8	339030X1	M6	**1**	NUT	ECROU DADO	MUTTER TUERCA

Side Console Harness	Cab
Faisceau De Console Laterale	Cabine
Seiten Konsole Kabel	Kabine
Fascio Mensola Latarale	Cabina
Mazo Cables Consola Lateral	Cabina

90-80

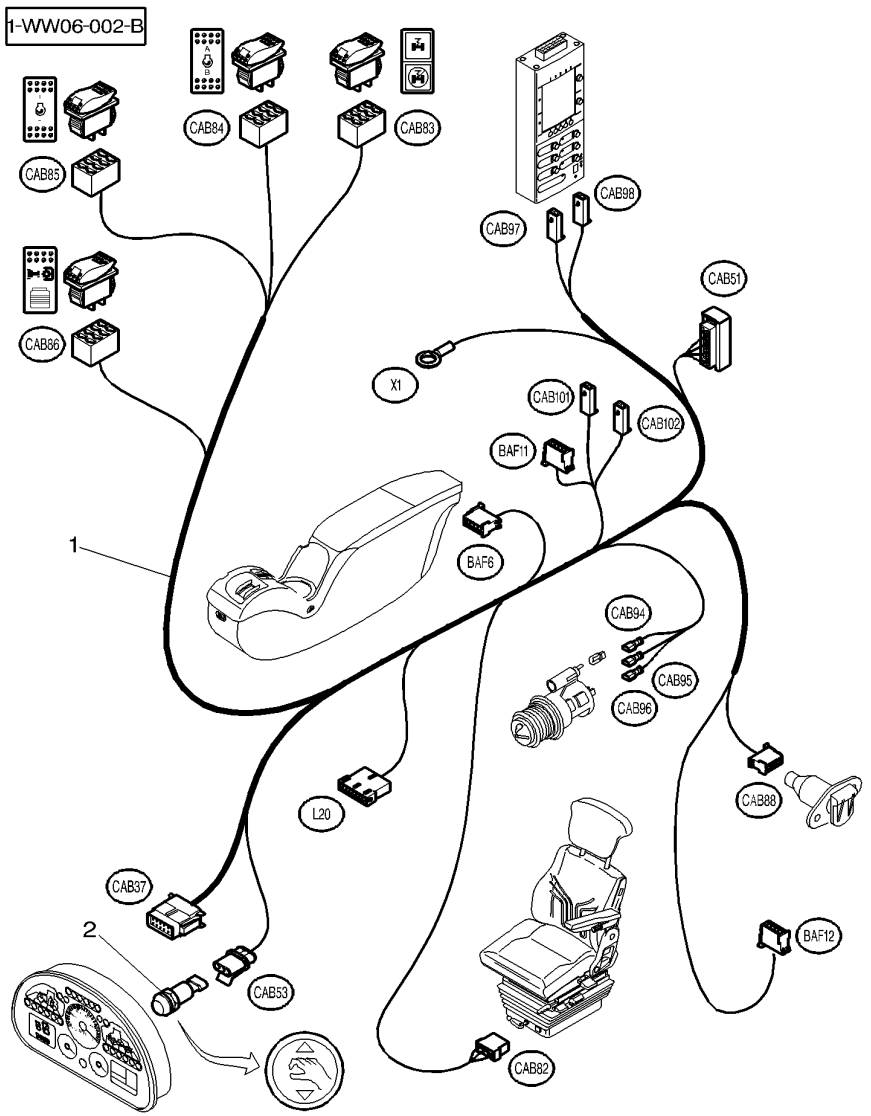

1	4271327M92	**1**	HARNESS	FAISCEAU FASCIOCAVI	KABELBAUM MAZO CABLES
2	**G716970160030**	**1**	PRESSURE SWITCH	MANO CONTACT PRESSOSTATO	DRUCKSCHALTER INTERRUP PRESION

Transmission Main Harness
Faisceau Transmission Principal
Kraftubertragung Hauptkabelbaum
Cavo Principale De Transmissione
Mazo Cables Principale Ttransmission

90-85

R298036

1-WW08-013-A

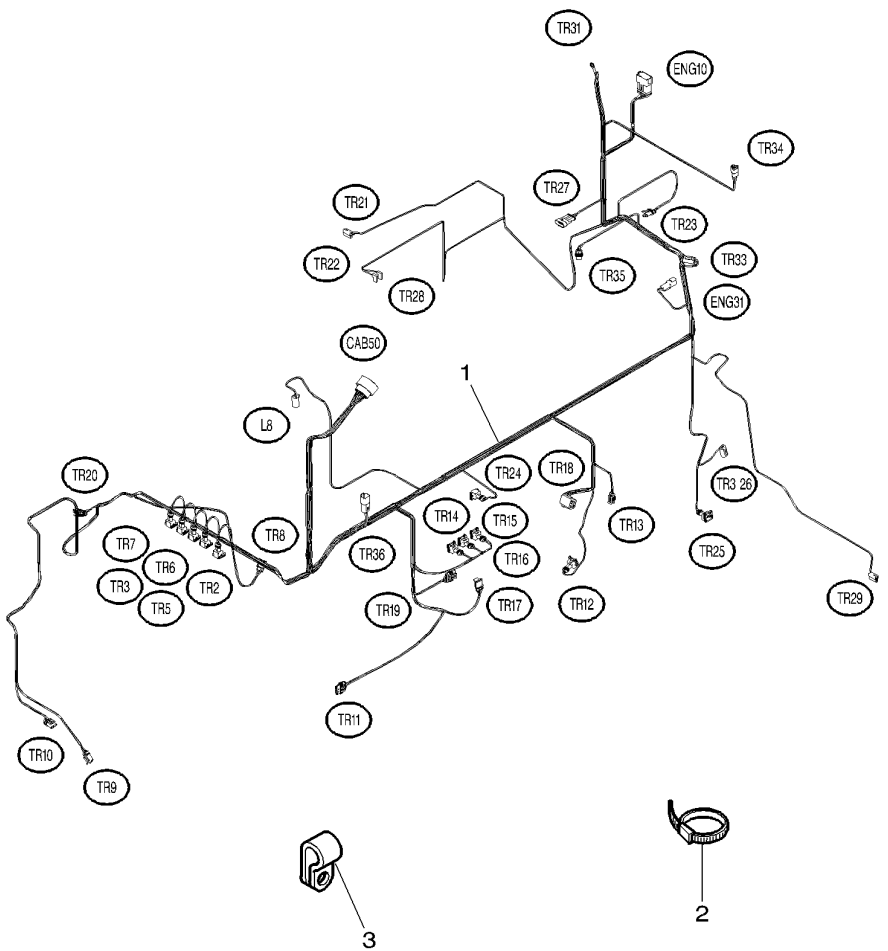

1	4277436M93		**1**	HARNESS	FAISCEAU FASCIOCAVI	KABELBAUM MAZO CABLES
2	3619622M1		**X**	CABLE TIE	ATTACHE CABLE FASCETTA CAVI	KABELBINDER APRIETACABLES
3	4278721M1	∅ 22 - M12	**2**	CLAMP	COLLIER FASCETTA	HALTESCHELLE ABRAZADERA

Transmission Main Harness
Faisceau Transmission Principal
Kraftubertragung Hauptkabelbaum
Cavo Principale De Transmissione
Mazo Cables Principale Ttransmission

90-90

R298037

1-WW08-025-A

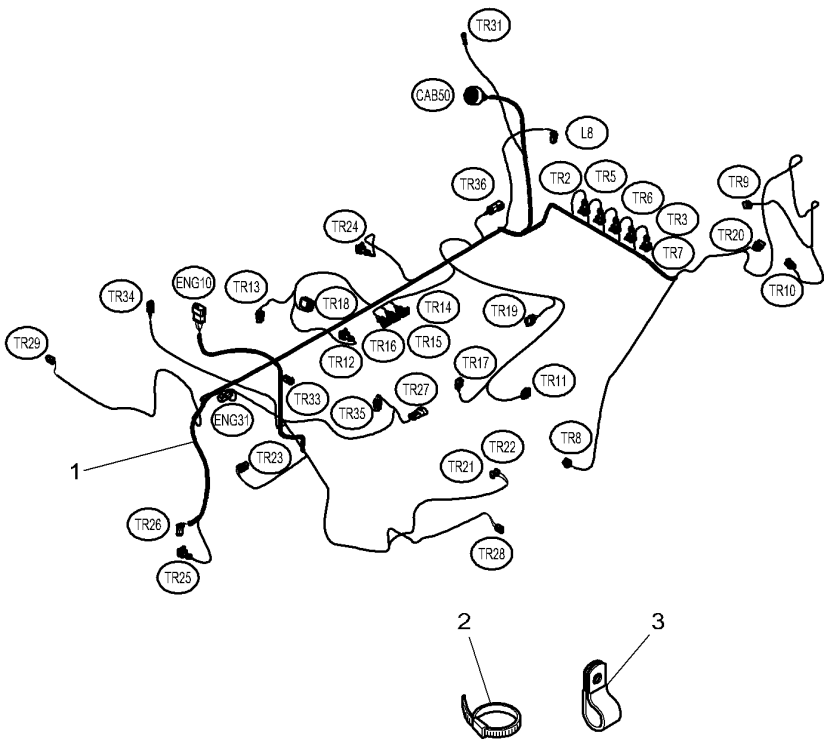

1*	4286941M1		**1**	HARNESS	FAISCEAU FASCIOCAVI
2	3619622M1		**X**	CABLE TIE	ATTACHE CABLE FASCETTA CAVI
3	4278721M1	∅ 22 - M12	**2**	CLAMP	COLLIER FASCETTA

KABELBAUM	MAZO CABLES	
KABELBINDER	APRIETACABLES	
HALTESCHELLE	ABRAZADERA	

Electronic Equipment	Sensors
Equipement Electronique	Capteurs
Elektron Ausrstg	Sensoren
Equipaggiamento Elettronico	Senori
Equipo Electronico	Sensores

90-95

1-WU37-006-A

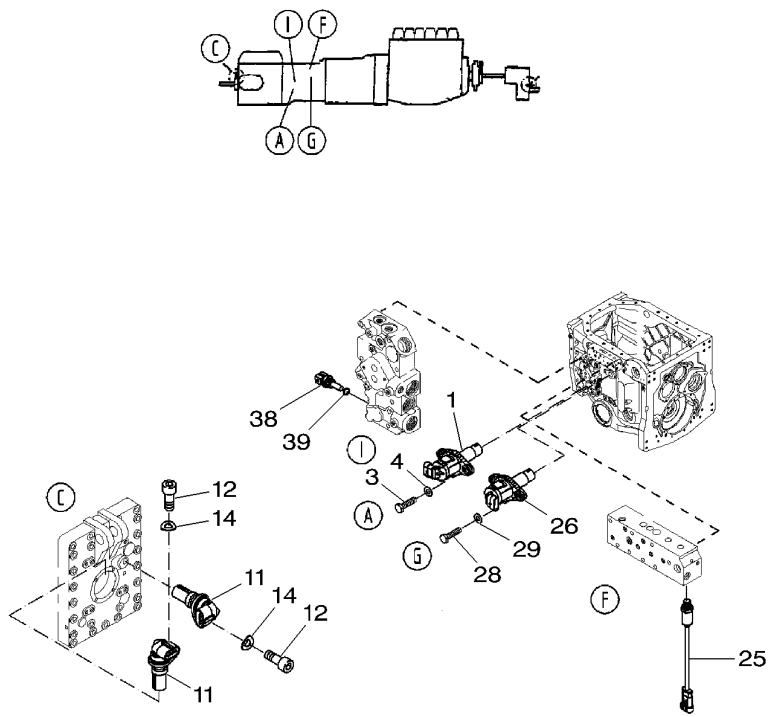

1	**G916970020014**	[A]	**1** SENSOR	DETECTEUR SENSORE	SENSOR DETECTOR
3	X487527741000	M8 X 20	**2** SCREW	VIS VITE	SCHRAUBE TORNILLO
4	X450006308000		**2** WASHER	RONDELLE RONDELLA	SCHEIBE ARANDELA
11	**G816970020040**	[B]	**2** HALL SENSOR	CAPTEUR DE HALL HALL SENSOR	HALL-GEBER HALL SENSOR
12	X485009405000	M8 X 16	**2** HEX. SOCK. SCREW	VIS TETE HEX VITE PARKER	ZYLINDERSCHRAUBE TORN.CAB.HUECA
14	X521403947000		**2** SPRING PLATE	PLAQUE RESSORT RONDELLA ELASTIC	FEDERSCHEIBE. PLETINA MUELLE
25*	**G718970020021**	[C]	**1** PRESS.TRANSDUCER	CAPTEUR PRESSION PRESS.TRANSDUCER	DRUCKGEBER PRESS.TRANSDUCER
26	**G916970020014**	[D]	**1** SENSOR	DETECTEUR SENSORE	SENSOR DETECTOR
28	X487527741000	M8 X 20	**2** SCREW	VIS VITE	SCHRAUBE TORNILLO
29	X450006308000		**2** WASHER	RONDELLE RONDELLA	SCHEIBE ARANDELA
38	**H312100360030**	[E]	**1** TEMP. SENSOR	SONDE TEMPERATUR TEMP. SENSOR	TEMPERATURGEBER EMISOR DEL CALOR
39	**X540004078000**		**1** RING	ANNEAU ANELLO	RING. ANILLO

[A] TRANSMITTER DRIVING-SPEED "A"
TRANSMETTEUR VITESSE D'AVANCEMENT "A"
GEBER FAHRGESCHWINDIGKEIT "A"
SENSORE VELOCITA DI MARCIA "A"
EMISOR VELOCIDAD DE MARCHA "A"

[B] TRANSMITTER P.T.O RPM REAR "C" 40MM
TRANSMETTEUR REGIME PRISE DE FORCE AR "C" 40MM
GEBER ZAPFW.DREHZAHL HINTEN "C" 40MM
SENSORE GIRI P.T.O. POSTERIORE "C" 40MM
EMISOR REVOL.EJE DE T.D.F. DETRAS "C" 40MM

[C] TRANSMISSION "F"
TRANSMISSION "F"
GETRIEBE "F"
CAMBIO "F"
CAJA DE CAMBIOS "F"

[D] GEARBOX SPEED SENSOR "G"
CAPTEUR VITESSE ROTATION BOITE "G"
GEBER GETRIEBEDREHZAHL "G"
SENSORE GIRI CAMBIO "G"
EMISOR REVOLUCIONES CAJA DE CAMBIOS "G"

[E] OIL TEMPERATURE TRANMISSION "I"
TEMPERATURE D'HUILE TRANSMISSION "I"
OELTEMPERATUR GETRIEB "I"
TEMPERATURA OLIO CAMBIO "I"
TEMPERATURA DEL ACEITE CAJA DE CAMBIOS "I"

Sheet Metal	Grille
Carrosserie	Calandre
Verkleidung	Kuehlergrill
Carrozzeria	Griglia
Emplanchados	Griglia

100-5

US

1-WR02-013-B

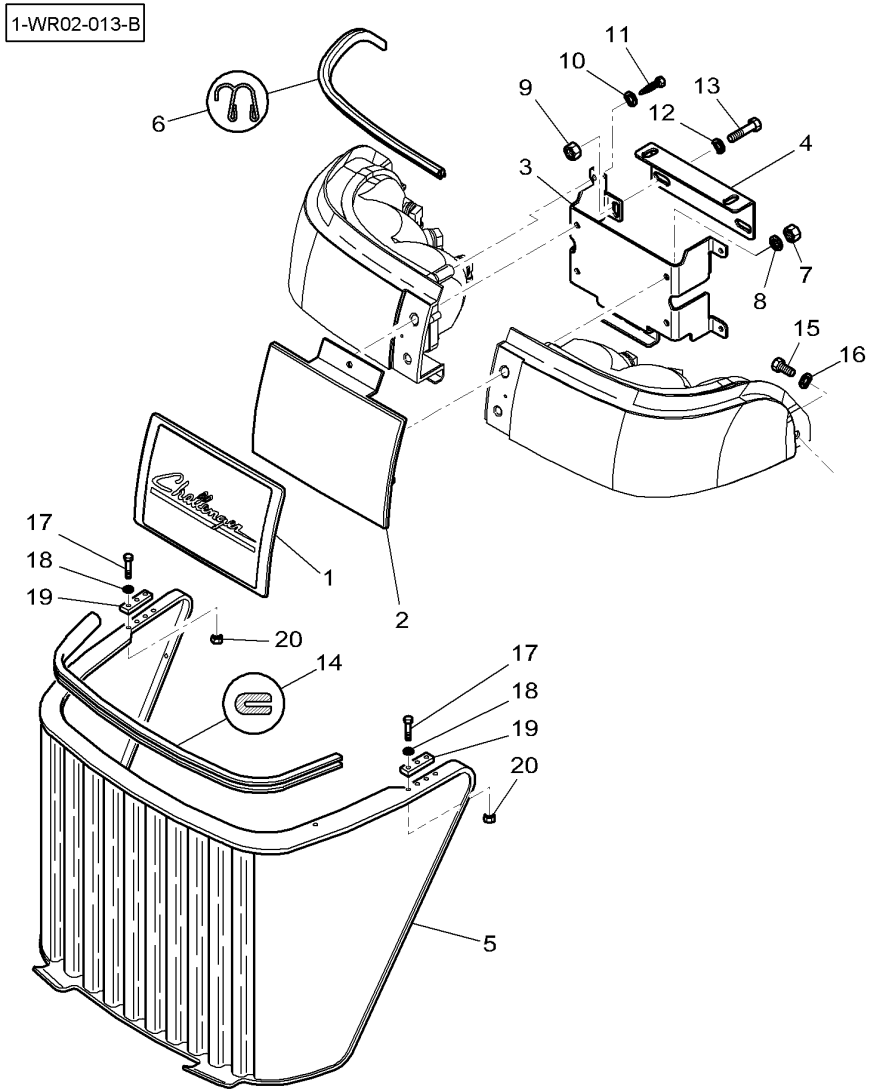

1	5017921M3		**1**	EMBLEM	EMBLEME EMBLEMA	EMBLEM EMBLEMA
2	5017922P3		**1**	SUPPORT	SUPPORT SOPPORTO	TRAGER SOPORTE
3	5017899M3		**1**	PLATE	PLAQUE PIASTRA	PLATTE PLATO
4	4278550M1		**1**	SUPPORT	SUPPORT SOPPORTO	TRAGER SOPORTE
5	5017829M93		**1**	GRILLE	GRILLE GRIGLIA.	GRILL REJILLA
6	5017908M1	◄► 1190MM	**1**	GASKET	JOINT GIUNTO PIANO	FLACHDICHTUNG JUNTA PLANA
7	1441500X1		**4**	TOP LOCKNUT	ECROU AUTOFREINE DADO DI TESTA	SELBSTS.MUTTER CONTRATUERCA SUP
8	390971X1		**4**	FLAT WASHER	RONDELLE PLATE RONDELLE PIANA	UNTERLEGSCHEIBEN ARANDELA PLANA
9	339169X1		**2**	NUT	ECROU DADO	MUTTER TUERCA
10	3019560X1	M10	**4**	WASHER	RONDELLE RONDELLA	SCHEIBE ARANDELA
11	3580117M1		**4**	SELF TAP SCREWS	VIS AUTO TARAUD KITAUTOBLOCCANTE	SCHNEIDSCHRAUBEN TORNILLO CHAPA
12			**4**	WASHER	RONDELLE RONDELLA	SCHEIBE ARANDELA
13	339124X1	M8X16	**4**	HEX. SOCK. SCREW	VIS TETE HEX VITE PARKER	ZYLINDERSCHRAUBE TORN.CAB.HUECA
14	5017909M1	◄► 1100MM	**1**	GASKET	JOINT GIUNTO PIANO	FLACHDICHTUNG JUNTA PLANA
15	391074X1	M6X12	**2**	HEX. SOCK. SCREW	VIS TETE HEX VITE PARKER	ZYLINDERSCHRAUBE TORN.CAB.HUECA
16	391038X1		**2**	FLAT WASHER	RONDELLE PLATE RONDELLE PIANA	UNTERLEGSCHEIBEN ARANDELA PLANA
17	391883X1	M5 X 25	**6**	HEX. SOCK. SCREW	VIS TETE HEX VITE PARKER	ZYLINDERSCHRAUBE TORN.CAB.HUECA
18	390469X1	5-10 X 1,5	**6**	FLAT WASHER	RONDELLE PLATE RONDELLE PIANA	UNTERLEGSCHEIBEN ARANDELA PLANA
19	4282022M1		**2**	REINFORCEMENT	RENFORT RINFORZO	VERSTAERKUNG REFUERZO
20	390995X1	M5	**6**	NUT	ECROU DADO	MUTTER TUERCA

Sheet Metal	Grille
Carrosserie	Calandre
Verkleidung	Kuehlergrill
Carrozzeria	Griglia
Emplanchados	Griglia

100-10

1-WR02-014-D

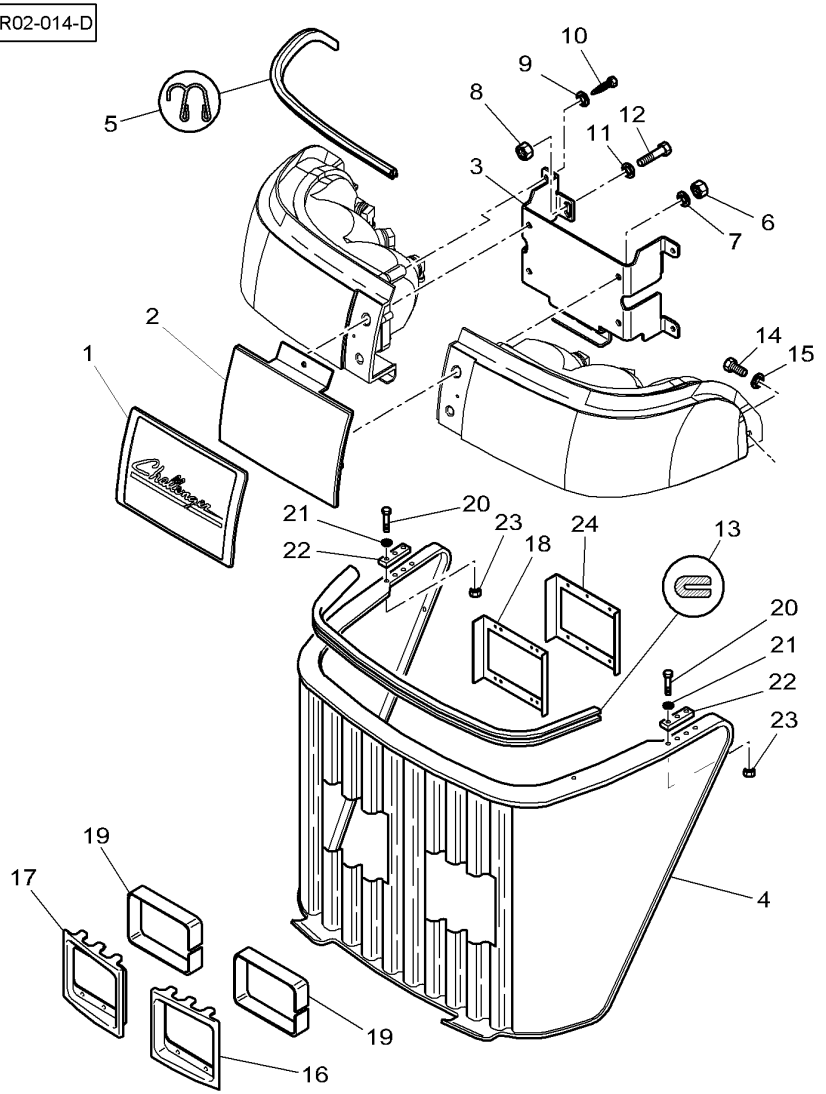

1	5017921M3		**1**	EMBLEM	EMBLEME EMBLEMA	EMBLEM EMBLEMA
2	5017922P3		**1**	SUPPORT	SUPPORT SOPPORTO	TRAGER SOPORTE
3	5017899M3		**1**	PLATE	PLAQUE PIASTRA	PLATTE PLATO
4	5017892M94		**1**	GRILLE	GRILLE GRIGLIA.	GRILL REJILLA
5	5017908M1	◀▶ 1190MM	**1**	GASKET	JOINT GIUNTO PIANO	FLACHDICHTUNG JUNTA PLANA
6	1441500X1		**4**	TOP LOCKNUT	ECROU AUTOFREINE DADO DI TESTA	SELBSTS.MUTTER CONTRATUERCA SUP
7	390971X1		**4**	FLAT WASHER	RONDELLE PLATE RONDELLE PIANA	UNTERLEGSCHEIBEN ARANDELA PLANA
8	339169X1		**2**	NUT	ECROU DADO	MUTTER TUERCA
9	3019560X1	M10	**4**	WASHER	RONDELLE RONDELLA	SCHEIBE ARANDELA
10	3580117M1		**4**	SELF TAP SCREWS	VIS AUTO TARAUD KITAUTOBLOCCANTE	SCHNEIDSCHRAUBEN TORNILLO CHAPA
11			**4**	WASHER	RONDELLE RONDELLA	SCHEIBE ARANDELA
12	339124X1	M8X16	**4**	HEX. SOCK. SCREW	VIS TETE HEX VITE PARKER	ZYLINDERSCHRAUBE TORN.CAB.HUECA
13	5017909M1	◀▶ 1100MM	**1**	GASKET	JOINT GIUNTO PIANO	FLACHDICHTUNG JUNTA PLANA
14	391074X1	M6X12	**2**	HEX. SOCK. SCREW	VIS TETE HEX VITE PARKER	ZYLINDERSCHRAUBE TORN.CAB.HUECA
15	391038X1		**2**	FLAT WASHER	RONDELLE PLATE RONDELLE PIANA	UNTERLEGSCHEIBEN ARANDELA PLANA
16	5017897M1	◀	**1**	TRIM	ENJOLIVEUR FINITURA	ZIERLEISTE TAPIZADO
17	5017896M1	▶	**1**	TRIM	ENJOLIVEUR FINITURA	ZIERLEISTE TAPIZADO
18	3783273M2	➡| ...	**2**	PLATE	PLAQUE PIASTRA	PLATTE PLATO
19	72509365	6X19X638MM	**6**	GASKET	JOINT GIUNTO PIANO	FLACHDICHTUNG JUNTA PLANA
20	391883X1	M5 X 25	**6**	HEX. SOCK. SCREW	VIS TETE HEX VITE PARKER	ZYLINDERSCHRAUBE TORN.CAB.HUECA
21	390469X1	∅ 5-10 X 1.5	**6**	FLAT WASHER	RONDELLE PLATE RONDELLE PIANA	UNTERLEGSCHEIBEN ARANDELA PLANA
22	4282022M1		**2**	REINFORCEMENT	RENFORT RINFORZO	VERSTAERKUNG REFUERZO
23	390995X1	M5	**6**	NUT	ECROU DADO	MUTTER TUERCA
24*	4285938M2	➡ R181060	**2**	PLATE	PLAQUE PIASTRA	PLATTE PLATO

Sheet Metal Carrosserie Verkleidung Carrozzeria Emplanchados	Hood Capot Motorhaube Cofano Capo	100-15	

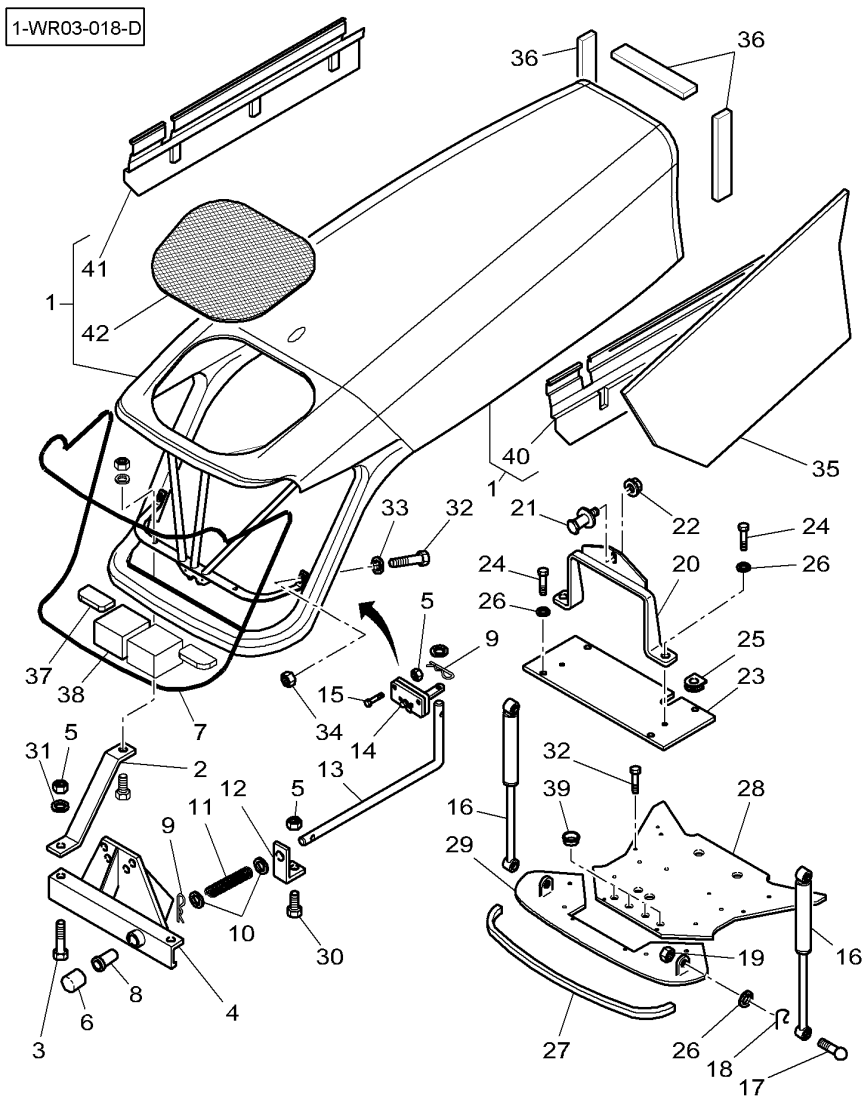

1	* 5017813P95		**1**	BONNET.	CAPOT COFANO	MOTORHAUBE CAPO
2	5016800M1		**2**	TIE	ATTACHE TRAVERSA ATTACCO	ANBINDUNG BARRA DE ENLACE
3	339560X1	M6 X 20	**4**	HEX. SOCK. SCREW	VIS TETE HEX VITE PARKER	ZYLINDERSCHRAUBE TORN.CAB.HUECA
4	5016796M92		**1**	SUPPORT	SUPPORT SOPPORTO	TRAGER SOPORTE
5	339030X1	M6	**10**	NUT	ECROU DADO	MUTTER TUERCA
6	5016517M1		**1**	BUTTON	BOUTON BOTTONE	KNOPFTASTE BOTON
7	4281389M1	20X3X4000	**1**	GASKET	JOINT GIUNTO PIANO	FLACHDICHTUNG JUNTA PLANA
8	72160887		**1**	BUSH	BAGUE BOCCOLA	RING CASQUILLO
9	1442967X1		**1**	SPLIT PIN	GOUPILLE FENDUE COPIGLIA	SPALTBOLZEN PASADOR HENDIDO
10	390734X1		**2**	FLAT WASHER	RONDELLE PLATE RONDELLE PIANA	UNTERLEGSCHEIBEN ARANDELA PLANA
11	5017249M1		**1**	SPRING	RESSORT MOLLA	FEDER MUELLE
12	5016798M1		**1**	STRAP	PATTE CORREGGIA	LASCHE FAJA
13	5016797M2		**1**	STEM	TIGE ASTA DEL ZAPETTA	MESSERSTIEL VASTAGO
14	5016791M1		**1**	LATCH	VERROU DENTE DI ARRESTO	KLINKE TOPE
15	391884X1	M6 X 50	**4**	HEX. SOCK. SCREW	VIS TETE HEX VITE PARKER	ZYLINDERSCHRAUBE TORN.CAB.HUECA
16	5016579M1		**2**	RAM	VERIN CILINDRO IDRAUL.	HYDR.ZYLINDER ARIETE
17	**3778880M1**		**4**	TOGGLE	ROTULE ROTULA	GELENKZAPFEN ROTULA
18	71307132		**4**	CLIP	PATTE D'ATTACHE FERMAGLIO	SCHELLE CLIP
19	339169X1	M8	**4**	NUT	ECROU DADO	MUTTER TUERCA
20	4278174M1		**1**	SUPPORT	SUPPORT SOPPORTO	TRAGER SOPORTE
21	72513270		**1**	LATCH	VERROU DENTE DI ARRESTO	KLINKE TOPE
22	70935041		**1**	NUT	ECROU DADO	MUTTER TUERCA
23	4278095M1		**1**	TRAP	TRAPPE TRAPPOLA	FANGKLAPPE PURGADOR
24	339124X1	M8 X 16	**6**	HEX. SOCK. SCREW	VIS TETE HEX VITE PARKER	ZYLINDERSCHRAUBE TORN.CAB.HUECA
25	3387555M1		**1**	GROMMET	PASSE FIL ANELLO PASSACAVO	GUMMITUELLE PASACABLE
26	390972X1		**10**	FLAT WASHER	RONDELLE PLATE RONDELLE PIANA	UNTERLEGSCHEIBEN ARANDELA PLANA

Sheet Metal	Hood
Carrosserie	Capot
Verkleidung	Motorhaube
Carrozzeria	Cofano
Emplanchados	Capo

100-15

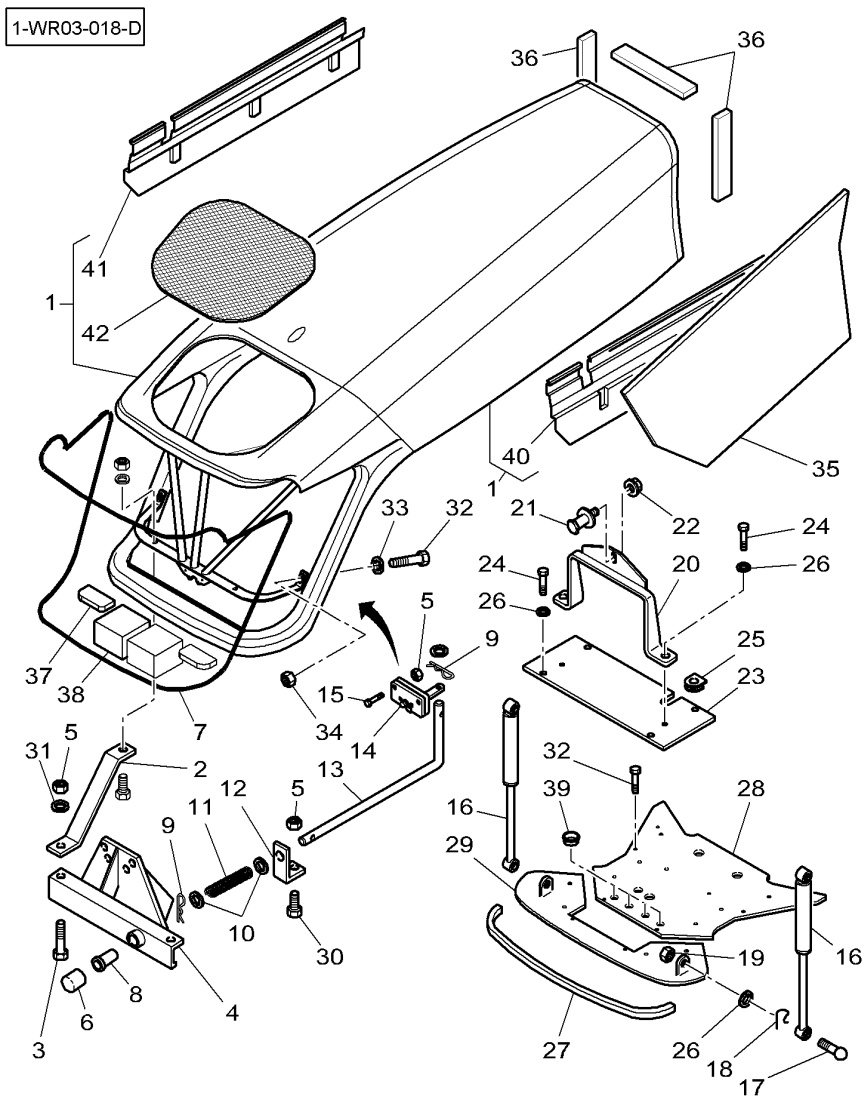

27	5017257M1	6X19X965	**1**	GASKET	JOINT GIUNTO PIANO	FLACHDICHTUNG JUNTA PLANA
28	4282225M1		**1**	SHIELD	TOLE RIPARO	SCHILD BLINDAJE
29	4279238M91		**2**	SHIELD	TOLE RIPARO	SCHILD BLINDAJE
30	339560X1	M6X16	**1**	HEX. SOCK. SCREW	VIS TETE HEX VITE PARKER	ZYLINDERSCHRAUBE TORN.CAB.HUECA
31	390971X1		**4**	FLAT WASHER	RONDELLE PLATE RONDELLE PIANA	UNTERLEGSCHEIBEN ARANDELA PLANA
32	3009493X1	M10X30	**8**	HEX. SOCK. SCREW	VIS TETE HEX VITE PARKER	ZYLINDERSCHRAUBE TORN.CAB.HUECA
33	390734X1		**2**	FLAT WASHER	RONDELLE PLATE RONDELLE PIANA	UNTERLEGSCHEIBEN ARANDELA PLANA
34	339402X1		**2**	NUT SPECIAL	ECROU SPECIAL DADO SPECIALE	SPEZIALMUTTER TUERCA ESPECIAL
35	72512965		**1**	PROTECTOR	PROTECTEUR PROTETTORE	SCHUTZ PROTECTOR
36	5016721M1	311x50x9.5	**3**	GASKET	JOINT GIUNTO PIANO	FLACHDICHTUNG JUNTA PLANA
37	5017258M1	40x12x81	**2**	GASKET	JOINT GIUNTO PIANO	FLACHDICHTUNG JUNTA PLANA
38	4281422M1	85x60x85	**2**	GASKET	JOINT GIUNTO PIANO	FLACHDICHTUNG JUNTA PLANA
39	4280509M1	[AB] ∅ 24.5 MM	**X**	PLUG	BOUCHON TAPPO	STOPFEN TAPON
40	5016023M2	1 ◀	**1**	BRIDLE	BRIDE BRIGLIA	LASCHENSPANNBAND BRIDA
41	5016024M2	1 ▶	**1**	BRIDLE	BRIDE BRIGLIA	LASCHENSPANNBAND BRIDA
42*	5017825M2	1	**1**	GRILLE	GRILLE GRIGLIA.	GRILL REJILLA

[A] WITHOUT FRONT LINKAGE
SANS ATTELAGE AVANT
OHNE VORDERE LENKER
SENZA ATTACCO ANTERIORE
SIN ENGANCHE DELANTERO

[B] WITHOUT HYDRAULIC COUPLING
SANS COUPLEUR HYDRAULIQUE
OHNE HYDR. - KUPPLUNG
SENZA GIUNTO IDRAULICO
SIN ACOPLADOR HIDRAULICO

Sheet Metal Carrosserie Verkleidung Carrozzeria Emplanchados	Hood Frame Armature Capot Motorhaube Armatur Armatura Cofano Armadura Capo	100-20	

1-WR25-006-A

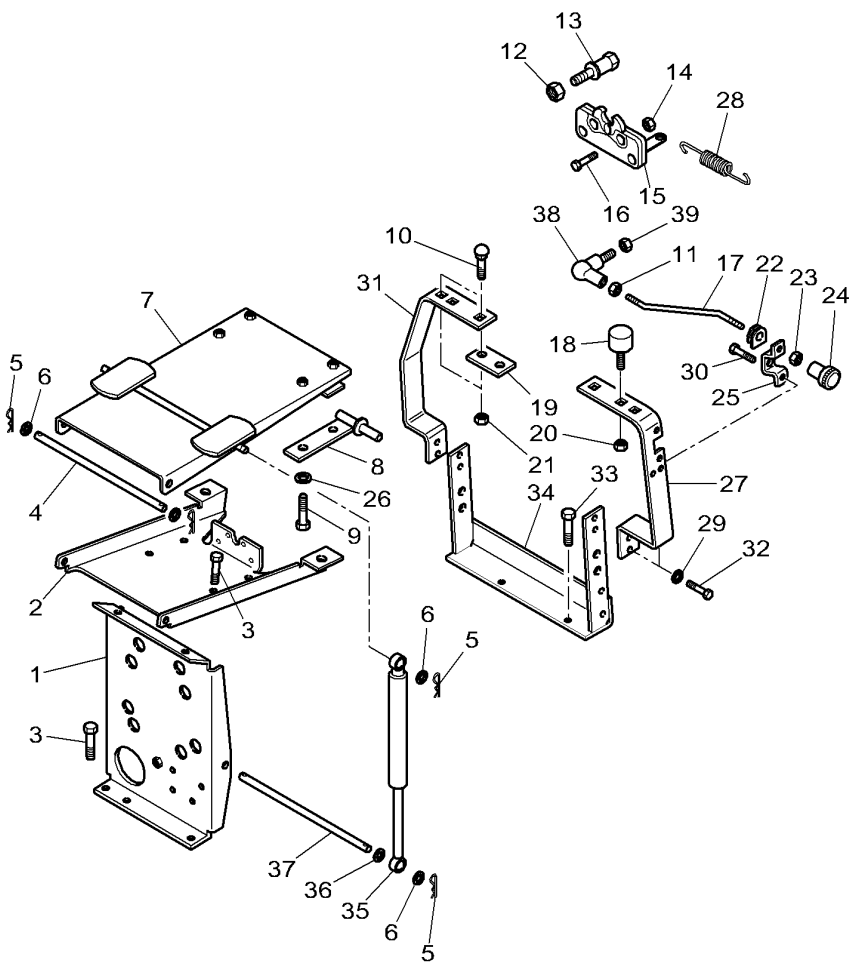

1	4274917M2		**1**	PLATE	PLAQUE PIASTRA	PLATTE PLATO
2	4274740M2		**1**	PLATE	PLAQUE PIASTRA	PLATTE PLATO
3	3009493X1	M10 X 30	**4**	HEX. SOCK. SCREW	VIS TETE HEX VITE PARKER	ZYLINDERSCHRAUBE TORN.CAB.HUECA
4	5016813M1	◄► 279,4 MM	**1**	CLEVIS PIN	AXE PERNO D'ATTACCO	SPLINTBOLZEN BULON CILINDRICO
5	1442962X1		**6**	SPLIT PIN	GOUPILLE FENDUE COPIGLIA	SPALTBOLZEN PASADOR HENDIDO
6	390734X1	∅ 10-21 X 2	**6**	FLAT WASHER	RONDELLE PLATE RONDELLE PIANA	UNTERLEGSCHEIBEN ARANDELA PLANA
7	4274741M94		**1**	PLATE	PLAQUE PIASTRA	PLATTE PLATO
8	4270738M91	►	**1**	PIVOT	PIVOT CARDINE	DREHZAPFEN. PIVOTE
8	4270739M91	◄	**1**	PIVOT	PIVOT CARDINE	DREHZAPFEN. PIVOTE
9	3011372X1	M12 X 20	**4**	PLOUGH BOLT	VIS A EMBASE VITE TESTA TONDA	SENKSCHLOSSSCHRB TORNILLO ALOJ C
10	390809X1	M10 X 25	**4**	SCREW SPECIAL	VIS SPECIALE VITE SPECIALE	SPEZIALSCHRAUBE TORNILLO ESPEC.
11	339030X1	M6	**1**	NUT	ECROU DADO	MUTTER TUERCA
12	70935041		**1**	NUT	ECROU DADO	MUTTER TUERCA
13	72513270		**1**	LATCH	VERROU DENTE DI ARRESTO	KLINKE TOPE
14	339030X1	M6	**4**	NUT	ECROU DADO	MUTTER TUERCA
15	72161441		**1**	LATCH	VERROU DENTE DI ARRESTO	KLINKE TOPE
16	339262X1	M6 X 30	**4**	HEX. SOCK. SCREW	VIS TETE HEX VITE PARKER	ZYLINDERSCHRAUBE TORN.CAB.HUECA
17	4274912M2		**1**	STEM	TIGE ASTA DEL ZAPETTA	MESSERSTIEL VASTAGO
18	4274918M1		**2**	STOP	BUTEE STOP	ANSCHLAG PARO
19	4274957M1		**1**	CHOCK	CALE PASSACAVO	UNTERLEG-KEIL CALZA
20	339169X1	M8	**2**	NUT	ECROU DADO	MUTTER TUERCA
21	339402X1	M10	**4**	NUT SPECIAL	ECROU SPECIAL DADO SPECIALE	SPEZIALMUTTER TUERCA ESPECIAL
22	3387555M1		**1**	GROMMET	PASSE FIL ANELLO PASSACAVO	GUMMITUELLE PASACABLE
23	339030X1	M6	**1**	NUT	ECROU DADO	MUTTER TUERCA
24	3783419M1		**1**	BUTTON	BOUTON BOTTONE	KNOPFTASTE BOTON
25	4274911M2		**1**	SUPPORT	SUPPORT SOPPORTO	TRAGER SOPORTE

Sheet Metal	Hood Frame
Carrosserie	Armature Capot
Verkleidung	Motorhaube Armatur
Carrozzeria	Armatura Cofano
Emplanchados	Armadura Capo

100-20

1-WR25-006-A

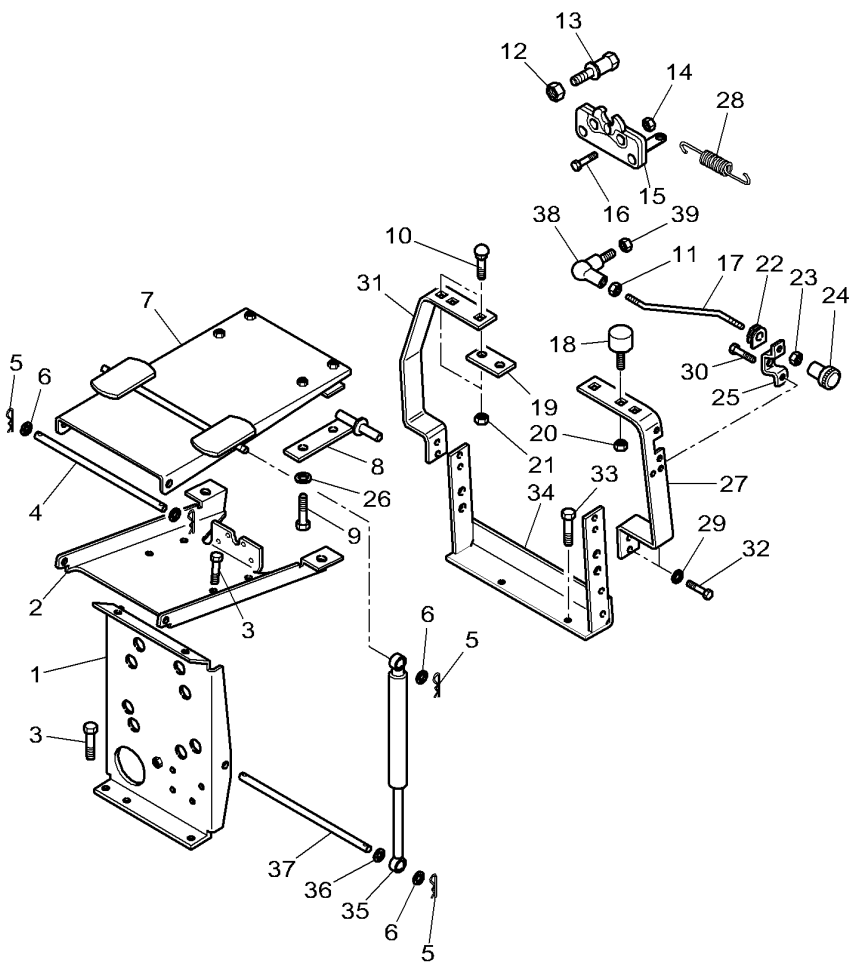

26	390735X1	∅ 12-24 X 2,5	**4**	FLAT WASHER	RONDELLE PLATE RONDELLE PIANA	UNTERLEGSCHEIBEN ARANDELA PLANA
27	4280588M1	◀	**1**	SUPPORT	SUPPORT SOPPORTO	TRAGER SOPORTE
28	3580581M1	◀▶ 128 MM	**1**	SPRING	RESSORT MOLLA	FEDER MUELLE
29	390734X1		**2**	FLAT WASHER	RONDELLE PLATE RONDELLE PIANA	UNTERLEGSCHEIBEN ARANDELA PLANA
30	339721X1	M5 X 16	**2**	HEX. SOCK. SCREW	VIS TETE HEX VITE PARKER	ZYLINDERSCHRAUBE TORN.CAB.HUECA
31	4280587M1	▶	**1**	SUPPORT	SUPPORT SOPPORTO	TRAGER SOPORTE
32	3009493X1	M10 X 30	**4**	HEX. SOCK. SCREW	VIS TETE HEX VITE PARKER	ZYLINDERSCHRAUBE TORN.CAB.HUECA
33	390419X1	M16 X 40	**2**	HEX. SOCK. SCREW	VIS TETE HEX VITE PARKER	ZYLINDERSCHRAUBE TORN.CAB.HUECA
34*	4280586M2		**1**	SUPPORT	SUPPORT SOPPORTO	TRAGER SOPORTE
35	3783428M2		**2**	RAM	VERIN CILINDRO IDRAUL.	HYDR.ZYLINDER ARIETE
36	5016817M1		**2**	SPACER	ENTRETOISE DISTANZIALE	ABSTANDSTUECK DISCO ESPACIADOR
37	5016451M1	◀▶ 321,8 MM	**1**	BRACKET	SUPPORT FIXATION STAFFETTA	HALTEARM SOPORTE
38	3782780M1		**1**	STUB	EMBOUT CEPPO	STUMMEL SALIENTE
39	1441500X1		**1**	TOP LOCKNUT	ECROU AUTOFREINE DADO DI TESTA	SELBSTS.MUTTER CONTRATUERCA SUP

Footstep
Marchepieds
Trittberetter
Pedana
Estribos

100-25

1-WS02-012-B

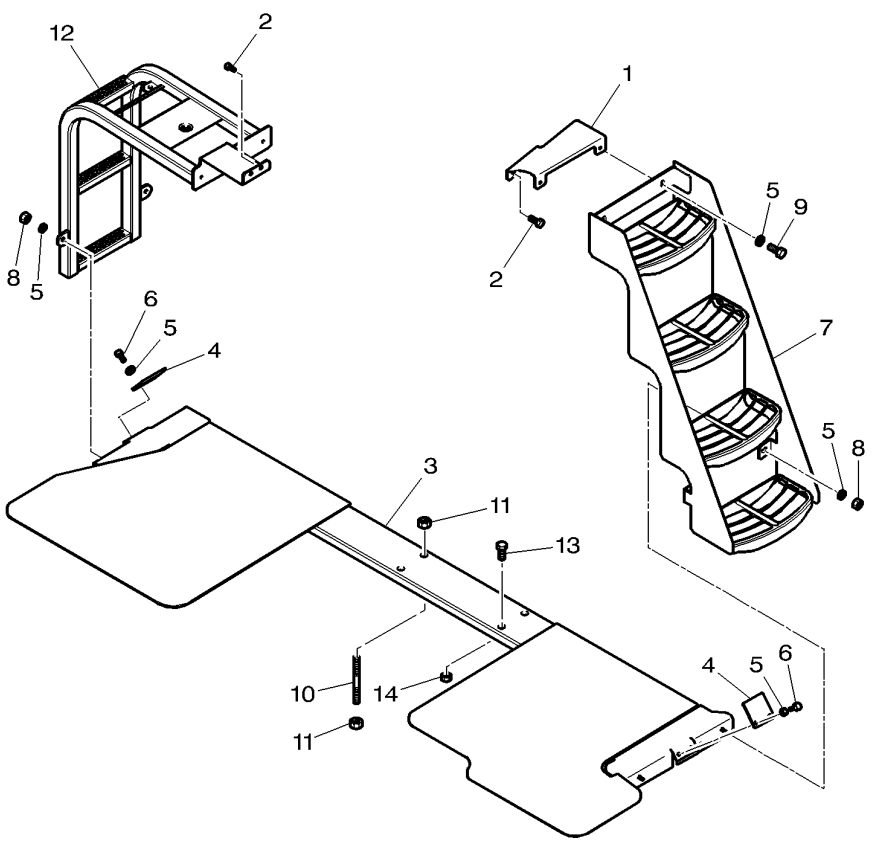

1	4278049M1	◀	**1**	SUPPORT SOPPORTO	TRAGER SOPORTE
2	3009492X1	M10 X 25	**4**	HEX. SOCK. SCREW VITE PARKER	ZYLINDERSCHRAUBE TORN.CAB.HUECA
3	4275585M94		**1**	SUPPORT SOPPORTO	TRAGER SOPORTE
4	3786299M1		**2**	BRIDLE BRIGLIA	LASCHENSPANNBAND BRIDA
5	390972X1	∅ 8-17 X 1,7	**10**	FLAT WASHER RONDELLE PIANA	UNTERLEGSCHEIBEN ARANDELA PLANA
6	339124X1	M8 X 16	**4**	HEX. SOCK. SCREW VITE PARKER	ZYLINDERSCHRAUBE TORN.CAB.HUECA
7	3787215M91	◀	**1**	STEP GRADINO	STUFEN APOYAPIES
8	339169X1	M8	**4**	NUT DADO	MUTTER TUERCA
9	339761X1	M8 X 25	**2**	HEX. SOCK. SCREW VITE PARKER	ZYLINDERSCHRAUBE TORN.CAB.HUECA
10	3019875X1		**2**	STUD SPINOTTO FILETT.	STEHBOLZEN ESPARRAGO ROSCA.
11	339034X1	M16	**4**	NUT DADO	MUTTER TUERCA
12	4275463M93	▶	**1**	STEP GRADINO	STUFEN APOYAPIES
13	3580795M1	M16 X 80	**2**	HEX. SOCK. SCREW VITE PARKER	ZYLINDERSCHRAUBE TORN.CAB.HUECA
14	339034X1	M16	**2**	NUT DADO	MUTTER TUERCA

Emblems
Emblemes
Firmenzeichen
Emblemi
Emblemas

100-30

1-WR05-026-B

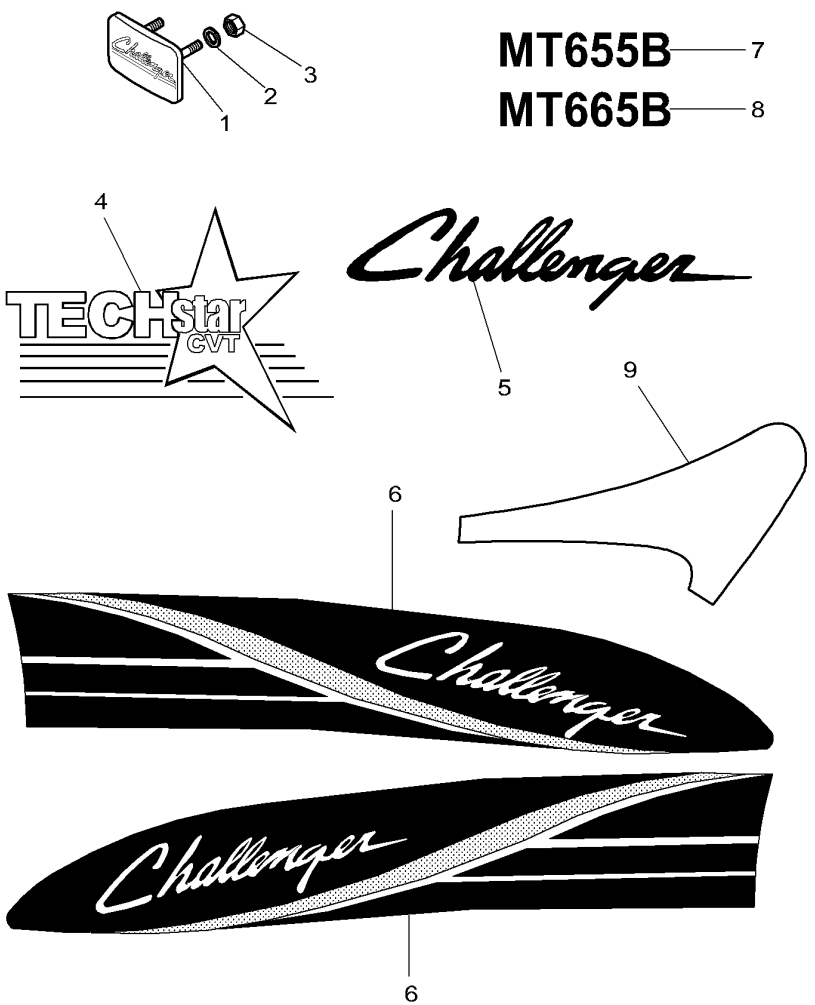

1	4274275M91		**1**	BADGE	BADGE DISTINTIVO	ABZEICHEN DIVISA
2	390971X1	∅ 6-12 X 1,5 MM	**2**	FLAT WASHER	RONDELLE PLATE RONDELLE PIANA	UNTERLEGSCHEIBEN ARANDELA PLANA
3	1441500X1	M6	**2**	TOP LOCKNUT	ECROU AUTOFREINE DADO DI TESTA	SELBSTS.MUTTER CONTRATUERCA SUP
4	4276819M1		**2**	DECAL	DECALCOMANIE DECALCOMANIA	AUFKLEBER CALCOMANIA
5	4275168M2		**2**	DECAL	DECALCOMANIE DECALCOMANIA	AUFKLEBER CALCOMANIA
6	4274714M1	◀	**1**	DECAL	DECALCOMANIE DECALCOMANIA	AUFKLEBER CALCOMANIA
6	4274715M1	▶	**1**	DECAL	DECALCOMANIE DECALCOMANIA	AUFKLEBER CALCOMANIA
7	4274718M2	MT 655B	**2**	DECAL	DECALCOMANIE DECALCOMANIA	AUFKLEBER CALCOMANIA
8	4274719M1	MT 665B	**2**	DECAL	DECALCOMANIE DECALCOMANIA	AUFKLEBER CALCOMANIA
9	4280989M1	◀	**1**	DECAL	DECALCOMANIE DECALCOMANIA	AUFKLEBER CALCOMANIA
9	4280988M1	▶	**1**	DECAL	DECALCOMANIE DECALCOMANIA	AUFKLEBER CALCOMANIA

Decals **Decalcomanies** **Abziehbilder** **Decalcomanie** **Calcomanias**	**Safety** **Securite** **Sicherheit** **Sicurezza** **Seguridad**	**100-35**

United States Only - See Next Page For Decal Location
Etats Unis Seulement - Voir Page Suivante Pour L Emplacement Des Decalcomanies
Vereinigten Staaten - Ehen Naechste Seite Fuer Die Aufkleber Lage
Stati Uniti - Veder Pagina Seguente Per La Posizione Dei Decalcomanies
Estados Unidos - Ver Pagina Siguiente Por La Posicion De Las Calcomanias

1-WR13-048-B

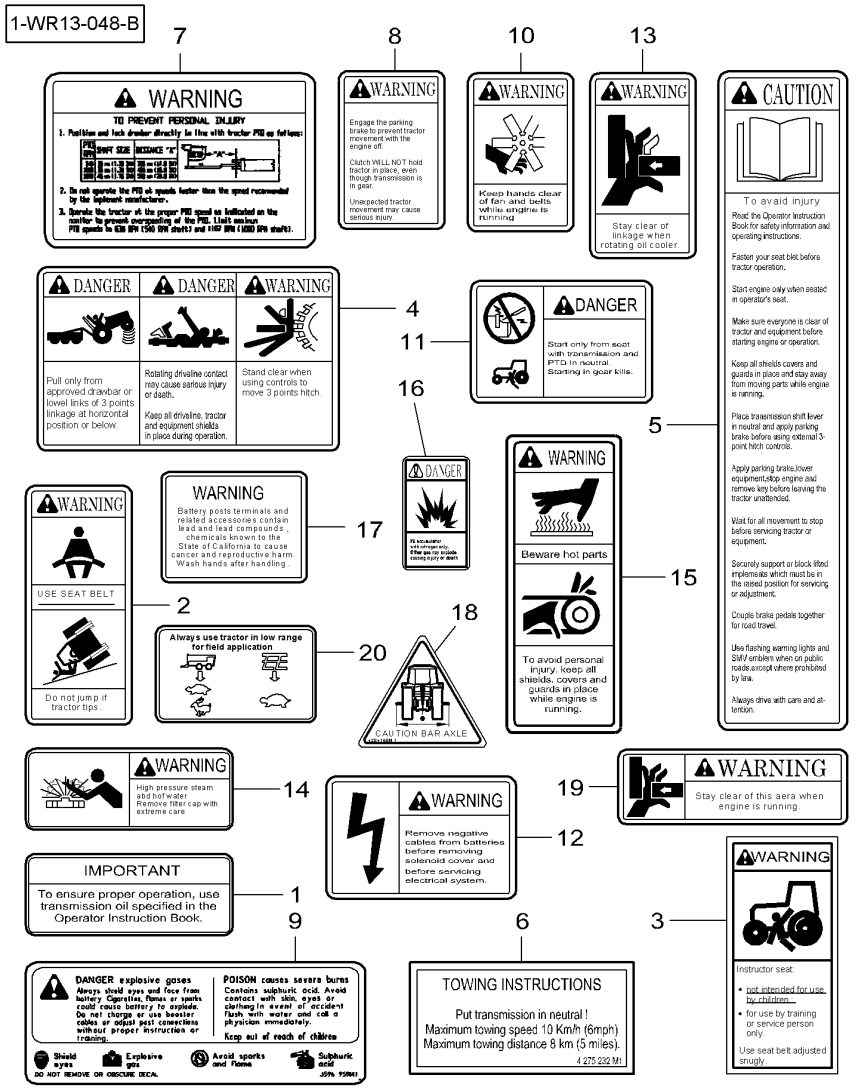

1	3777020M1		**1**	DECAL	DECALCOMANIE DECALCOMANIA	AUFKLEBER CALCOMANIA
2	3808567M2		**1**	DECAL	DECALCOMANIE DECALCOMANIA	AUFKLEBER CALCOMANIA
3	3787683M1		**1**	DECAL	DECALCOMANIE DECALCOMANIA	AUFKLEBER CALCOMANIA
4	3808558M3		**1**	DECAL	DECALCOMANIE DECALCOMANIA	AUFKLEBER CALCOMANIA
5	3808550M3		**1**	DECAL	DECALCOMANIE DECALCOMANIA	AUFKLEBER CALCOMANIA
6	4275232M1		**1**	DECAL	DECALCOMANIE DECALCOMANIA	AUFKLEBER CALCOMANIA
7	72503125		**1**	DECAL	DECALCOMANIE DECALCOMANIA	AUFKLEBER CALCOMANIA
8	3777017M2		**1**	DECAL	DECALCOMANIE DECALCOMANIA	AUFKLEBER CALCOMANIA
9	3810054M1		**2**	DECAL	DECALCOMANIE DECALCOMANIA	AUFKLEBER CALCOMANIA
10	3808500M2		**2**	DECAL	DECALCOMANIE DECALCOMANIA	AUFKLEBER CALCOMANIA
11	5016264M1		**1**	DECAL	DECALCOMANIE DECALCOMANIA	AUFKLEBER CALCOMANIA
12	5016204M1		**1**	DECAL	DECALCOMANIE DECALCOMANIA	AUFKLEBER CALCOMANIA
13	5016744M1		**2**	DECAL	DECALCOMANIE DECALCOMANIA	AUFKLEBER CALCOMANIA
14	3808561M3		**1**	DECAL	DECALCOMANIE DECALCOMANIA	AUFKLEBER CALCOMANIA
15	3808555M2		**2**	DECAL	DECALCOMANIE DECALCOMANIA	AUFKLEBER CALCOMANIA
16	3777021M3		**1**	DECAL	DECALCOMANIE DECALCOMANIA	AUFKLEBER CALCOMANIA
17	3786812M1		**2**	DECAL	DECALCOMANIE DECALCOMANIA	AUFKLEBER CALCOMANIA
18	4284168M1		**1**	DECAL	DECALCOMANIE DECALCOMANIA	AUFKLEBER CALCOMANIA
19	3786314M1	[A]	**1**	DECAL	DECALCOMANIE DECALCOMANIA	AUFKLEBER CALCOMANIA
20	*4291458M1		**1**	DECAL	DECALCOMANIE DECALCOMANIA	AUFKLEBER CALCOMANIA

[A] WITH FRONT AXLE SUSPENDED
AVEC PONT AVANT SUSPENDU
MIT HAENGE VORDERASCHSE
CON ASSALE ANTERIORE SOSPESO
CON EJE DELANTERO SUSPENDIDO

Decals Decalcomanies Abziehbilder Decalcomanie Calcomanias	Safety Securite Sicherheit Sicurezza Seguridad	100-40	US

1-WR13-049-A

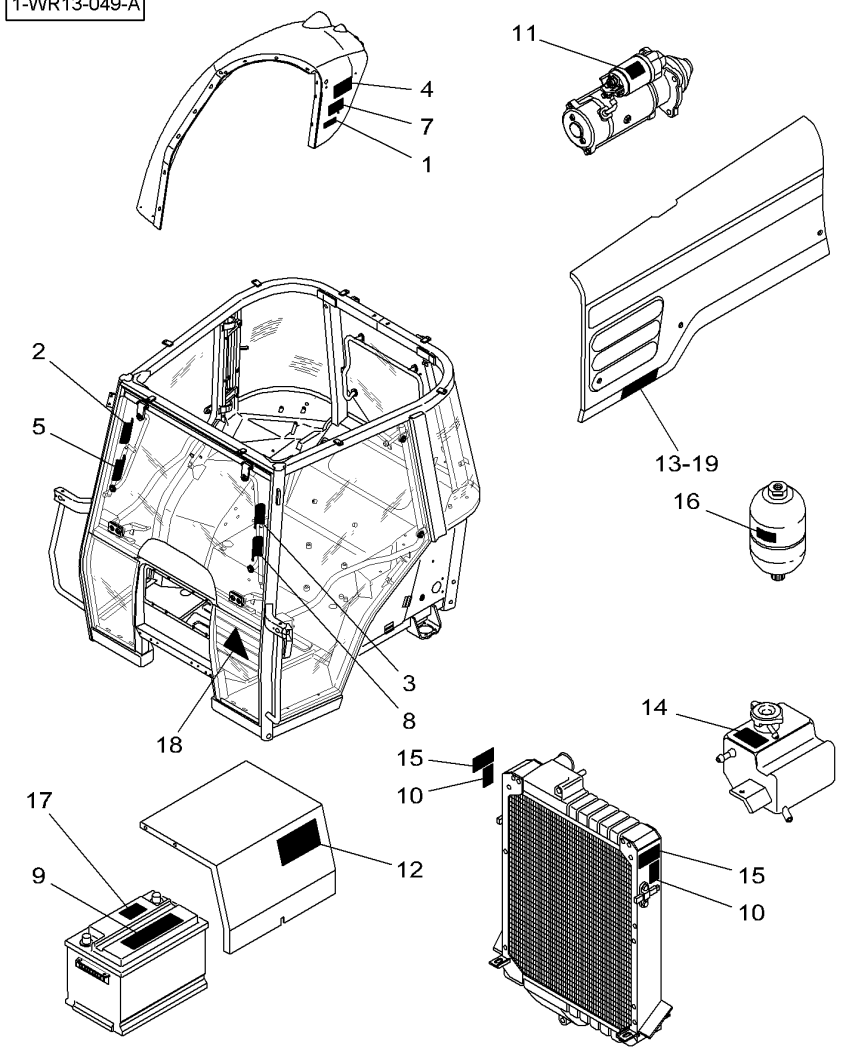

1	3777020M1		**1**	DECAL	DECALCOMANIE DECALCOMANIA	AUFKLEBER CALCOMANIA
2	3808567M2		**1**	DECAL	DECALCOMANIE DECALCOMANIA	AUFKLEBER CALCOMANIA
3	3787683M1		**1**	DECAL	DECALCOMANIE DECALCOMANIA	AUFKLEBER CALCOMANIA
4	3808558M3		**1**	DECAL	DECALCOMANIE DECALCOMANIA	AUFKLEBER CALCOMANIA
5	3808550M3		**1**	DECAL	DECALCOMANIE DECALCOMANIA	AUFKLEBER CALCOMANIA
6	4275232M1	[A]	**1**	DECAL	DECALCOMANIE DECALCOMANIA	AUFKLEBER CALCOMANIA
7	72503125		**1**	DECAL	DECALCOMANIE DECALCOMANIA	AUFKLEBER CALCOMANIA
8	3777017M2		**1**	DECAL	DECALCOMANIE DECALCOMANIA	AUFKLEBER CALCOMANIA
9	3810054M1		**2**	DECAL	DECALCOMANIE DECALCOMANIA	AUFKLEBER CALCOMANIA
10	3808500M2		**2**	DECAL	DECALCOMANIE DECALCOMANIA	AUFKLEBER CALCOMANIA
11	5016264M1		**1**	DECAL	DECALCOMANIE DECALCOMANIA	AUFKLEBER CALCOMANIA
12	5016204M1		**1**	DECAL	DECALCOMANIE DECALCOMANIA	AUFKLEBER CALCOMANIA
13	5016744M1		**2**	DECAL	DECALCOMANIE DECALCOMANIA	AUFKLEBER CALCOMANIA
14	3808561M3		**1**	DECAL	DECALCOMANIE DECALCOMANIA	AUFKLEBER CALCOMANIA
15	3808555M2		**2**	DECAL	DECALCOMANIE DECALCOMANIA	AUFKLEBER CALCOMANIA
16	3777021M3		**1**	DECAL	DECALCOMANIE DECALCOMANIA	AUFKLEBER CALCOMANIA
17	3786812M1		**2**	DECAL	DECALCOMANIE DECALCOMANIA	AUFKLEBER CALCOMANIA
18	4284168M1		**1**	DECAL	DECALCOMANIE DECALCOMANIA	AUFKLEBER CALCOMANIA
19	3786314M1	[B]	**1**	DECAL	DECALCOMANIE DECALCOMANIA	AUFKLEBER CALCOMANIA

[A] NOT ILLUSTRATED
NON ILLUSTRE
NICHT ILLUSTRIERT
NON ILLUSTRATO
NO ILUSTRADO

[B] WITH FRONT AXLE SUSPENDED
AVEC PONT AVANT SUSPENDU
MIT HAENGE VORDERASCHSE
CON ASSALE ANTERIORE SOSPESO
CON EJE DELANTERO SUSPENDIDO

Decals Decalcomanies Abziehbilder Decalcomanie Calcomanias	Safety Securite Sicherheit Sicurezza Seguridad	100-45	GB

1-WR13-031-A

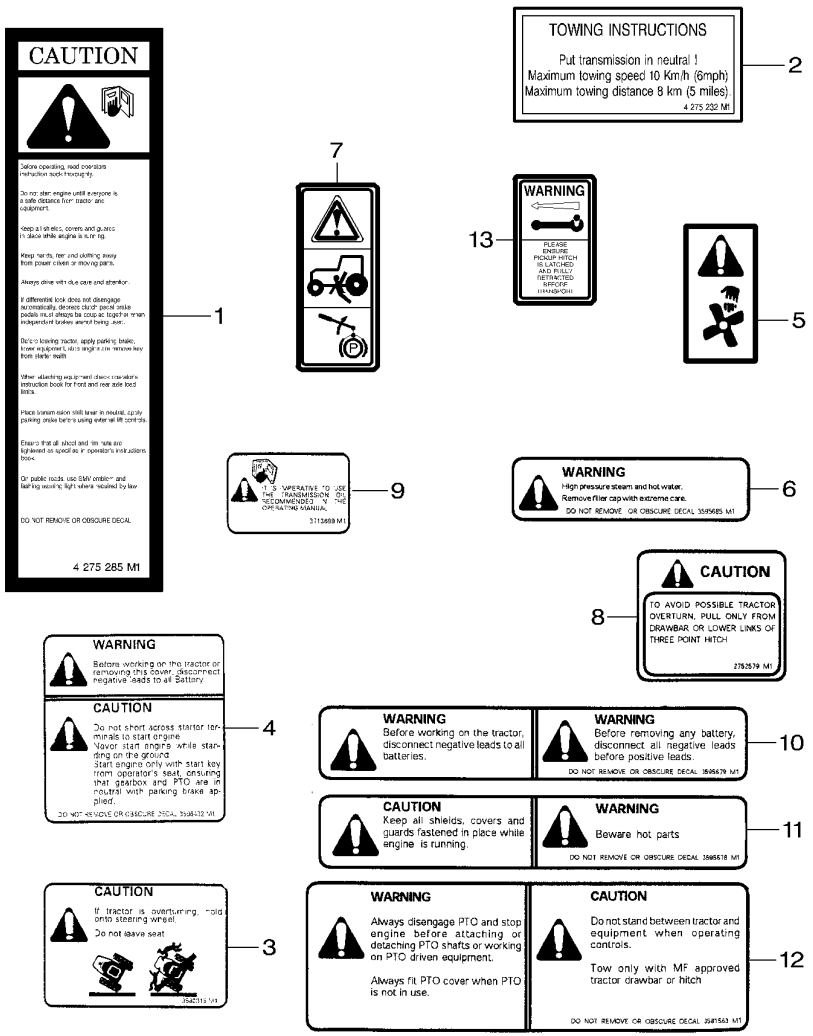

1	4275285M2	**1**	DECAL	DECALCOMANIE DECALCOMANIA	AUFKLEBER CALCOMANIA
2	4275232M1	**1**	DECAL	DECALCOMANIE DECALCOMANIA	AUFKLEBER CALCOMANIA
3	3580315M1	**1**	DECAL	DECALCOMANIE DECALCOMANIA	AUFKLEBER CALCOMANIA
4	3596432M1	**1**	DECAL	DECALCOMANIE DECALCOMANIA	AUFKLEBER CALCOMANIA
5	4271915M1	**1**	DECAL	DECALCOMANIE DECALCOMANIA	AUFKLEBER CALCOMANIA
6	3595685M1	**1**	DECAL	DECALCOMANIE DECALCOMANIA	AUFKLEBER CALCOMANIA
7	3782489M1	**1**	DECAL	DECALCOMANIE DECALCOMANIA	AUFKLEBER CALCOMANIA
8	2752579M1	**1**	DECAL	DECALCOMANIE DECALCOMANIA	AUFKLEBER CALCOMANIA
9	3713699M1	**1**	DECAL	DECALCOMANIE DECALCOMANIA	AUFKLEBER CALCOMANIA
10	3595679M1	**1**	DECAL	DECALCOMANIE DECALCOMANIA	AUFKLEBER CALCOMANIA
11	3595678M1	**1**	DECAL	DECALCOMANIE DECALCOMANIA	AUFKLEBER CALCOMANIA
12	3581563M1	**1**	DECAL	DECALCOMANIE DECALCOMANIA	AUFKLEBER CALCOMANIA
13*			NOT USED	NON UTILISE INUSATO	NICHT VERWENDET NO SE USA

Literature
Litterature
Literatur
Letteratura
Literatura

100-50

1-WR06-011-B

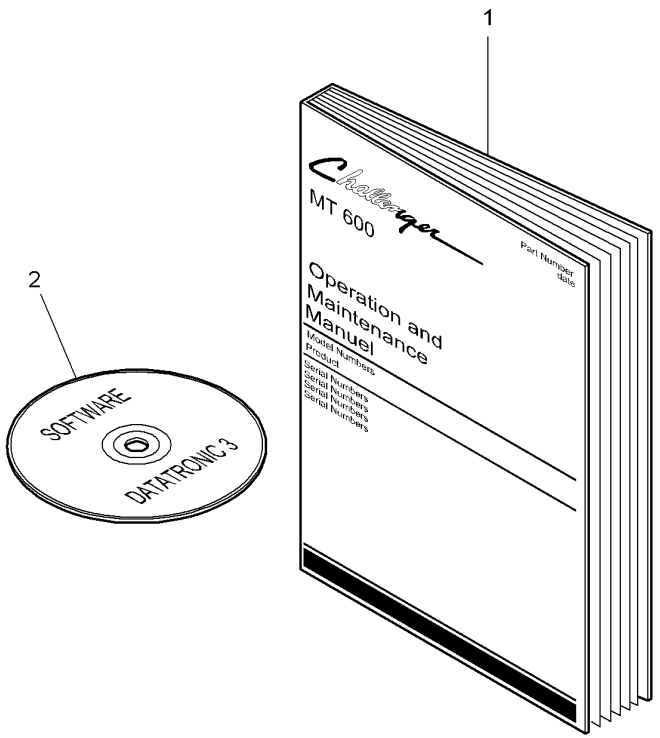

1	3378976M1		**1**	INSTRUCTION BOOK	GUIDEUTILISATION MANUALE ISTRUZI. MANUAL SERVICIO
2	72570001	[A]	**1**	SOFTWARE	PROGRAM.SOFTWARE LOGICIEL SOFTWARE

[A] WITH DATATRONIC "3"
AVEC DATATRONIC "3"
MIT DATATRONIC "3"
CON DATATRONIC "3"
CON DATATRONIC "3"

110

Cab Mountings
Fixation Cabine
Kabinenbefestigung
Montaggio Cabina
Monturas De Cabina

110-5

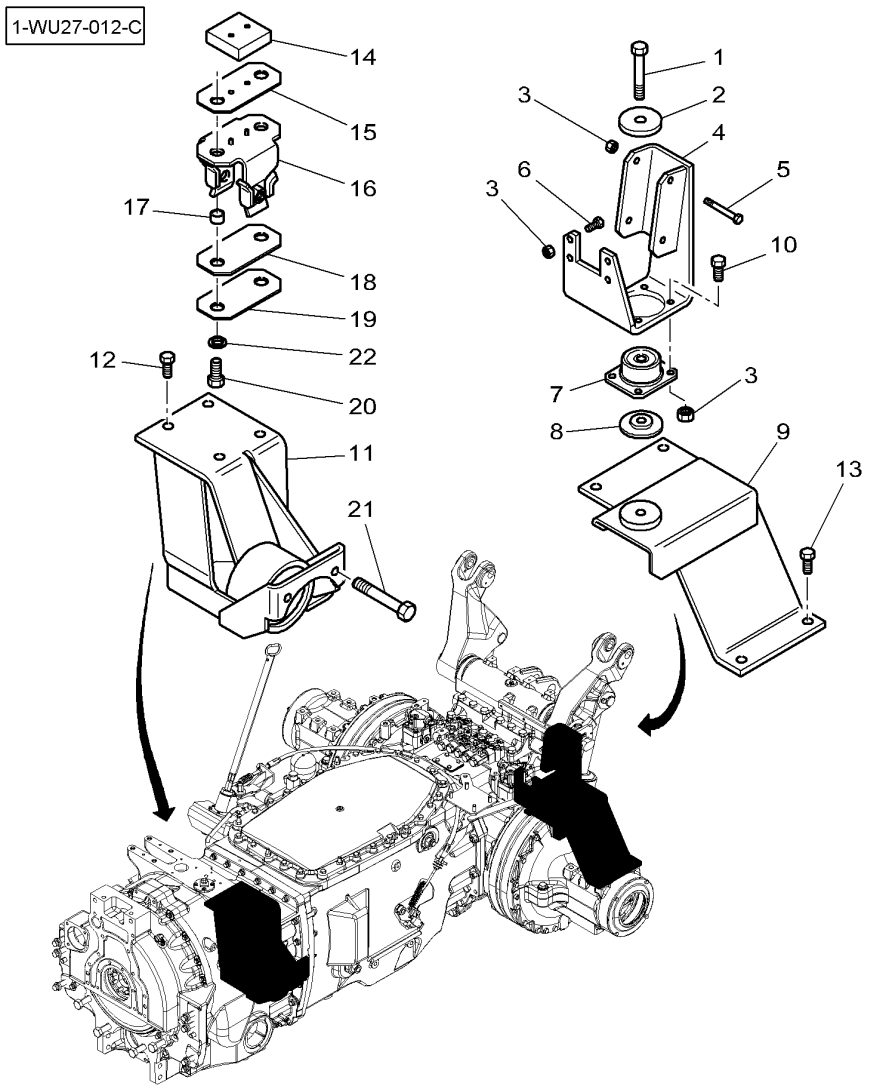

1	339182X1	M16 X 90	**2**	HEX. SOCK. SCREW	VIS TETE HEX VITE PARKER	ZYLINDERSCHRAUBE TORN.CAB.HUECA
2	3712809M2	∅ 17-72 X 8	**2**	SPACER	ENTRETOISE DISTANZIALE	ABSTANDSTUECK DISCO ESPACIADOR
3	339402X1	M10	**20**	NUT SPECIAL	ECROU SPECIAL DADO SPECIALE	SPEZIALMUTTER TUERCA ESPECIAL
4	3786991M3	◀	**1**	FOOT	PIED PIEDE	FUSS PIE
4	3786992M3	▶	**1**	FOOT	PIED PIEDE	FUSS PIE
5	339234X1	M10 X 120	**4**	HEX. SOCK. SCREW	VIS TETE HEX VITE PARKER	ZYLINDERSCHRAUBE TORN.CAB.HUECA
6	3009493X1	M10 X 30 ➡| 10-SEP-2006	**8**	HEX. SOCK. SCREW	VIS TETE HEX VITE PARKER	ZYLINDERSCHRAUBE TORN.CAB.HUECA
6*	3009494X1	M10 X 35 ➡ 11-SEP-2006	**8**	HEX. SOCK. SCREW	VIS TETE HEX VITE PARKER	ZYLINDERSCHRAUBE TORN.CAB.HUECA
7	3712693M1	2000N	**2**	VIBRATION MOUNT	SILENT BLOC ANTIVIBRANTE	METALLGUM.PUFFER MONTAJE ANTI-VIB
8	3388272M1	∅ 17-38-75	**2**	WASHER	RONDELLE RONDELLA	SCHEIBE ARANDELA
9	4274927M2	◀	**1**	SUPPORT	SUPPORT SOPPORTO	TRAGER SOPORTE
9	4274928M1	▶	**1**	SUPPORT	SUPPORT SOPPORTO	TRAGER SOPORTE
10	3009492X1	M10 X 25	**8**	HEX. SOCK. SCREW	VIS TETE HEX VITE PARKER	ZYLINDERSCHRAUBE TORN.CAB.HUECA
11*	4276062M96	◀	**1**	SUPPORT	SUPPORT SOPPORTO	TRAGER SOPORTE
11*	4276063M96	▶	**1**	SUPPORT	SUPPORT SOPPORTO	TRAGER SOPORTE
12	339275X1	M16 X 35	**8**	HEX. SOCK. SCREW	VIS TETE HEX VITE PARKER	ZYLINDERSCHRAUBE TORN.CAB.HUECA
13	3009132X1	M16 X 50	**4**	HEX. SOCK. SCREW	VIS TETE HEX VITE PARKER	ZYLINDERSCHRAUBE TORN.CAB.HUECA
14	4271078M1		**2**	PLATE	PLAQUE PIASTRA	PLATTE PLATO
15	4274223M1	⧗ 3 MM ➡| 10-SEP-2006	**2**	PLATE	PLAQUE PIASTRA	PLATTE PLATO
15*	4288240M1	⧗ 3 MM ➡ 11-SEP-2006	**2**	PLATE	PLAQUE PIASTRA	PLATTE PLATO
16	4278827M92	➡| 10-SEP-2006	**2**	SUPPORT	SUPPORT SOPPORTO	TRAGER SOPORTE
16*	4288244M91	➡ 11-SEP-2006	**2**	SUPPORT	SUPPORT SOPPORTO	TRAGER SOPORTE
17	4274225M91	➡| 10-SEP-2006	**4**	SPACER	ENTRETOISE DISTANZIALE	ABSTANDSTUECK DISCO ESPACIADOR
17*	4288200M91	➡ 11-SEP-2006	**4**	SPACER	ENTRETOISE DISTANZIALE	ABSTANDSTUECK DISCO ESPACIADOR
18	4275620M1	⧗ 4 MM ➡| 10-SEP-2006	**2**	PLATE	PLAQUE PIASTRA	PLATTE PLATO
18*	4288241M1	⧗ 4 MM ➡ 11-SEP-2006	**2**	PLATE	PLAQUE PIASTRA	PLATTE PLATO

Cab Mountings
Fixation Cabine
Kabinenbefestigung
Montaggio Cabina
Monturas De Cabina

110-5

1-WU27-012-C

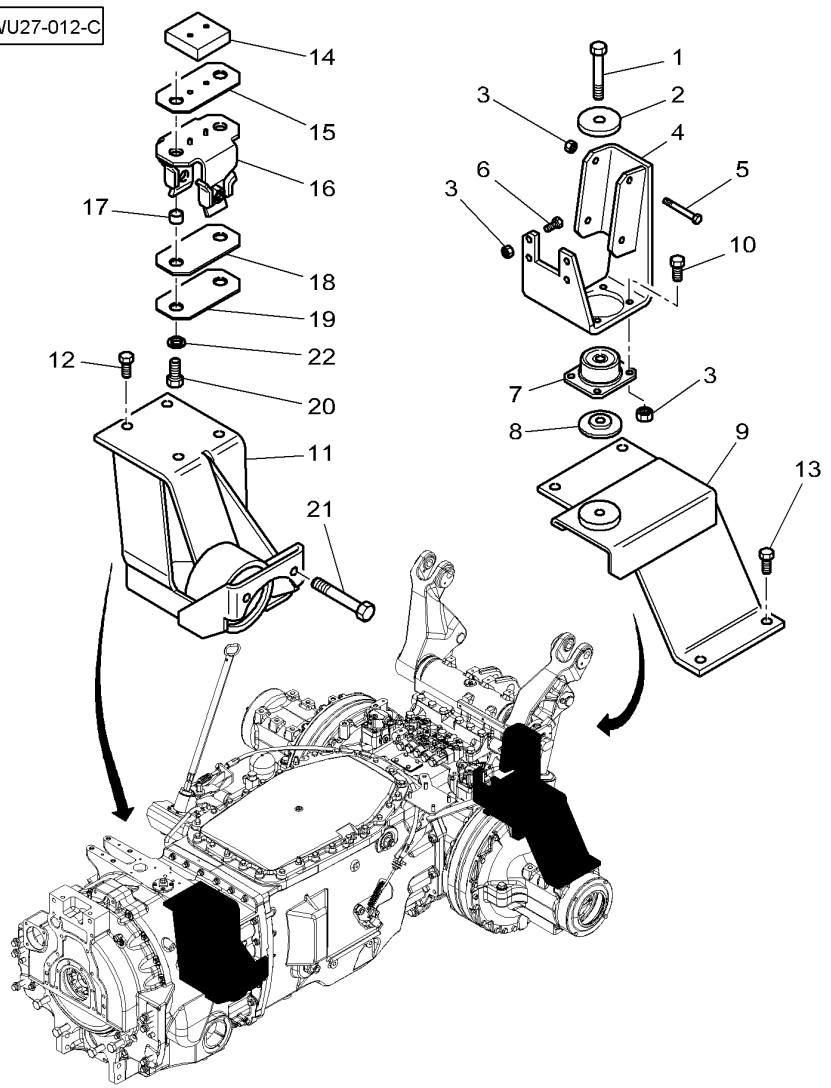

19	4279533M1	⧗ 5 MM	**2**	PLATE	PLAQUE PIASTRA PLATO
20	390419X1	M16 X 40	**4**	HEX. SOCK. SCREW	VIS TETE HEX VITE PARKER ZYLINDERSCHRAUBE TORN.CAB.HUECA
21	391914X1	M20 X 110	**2**	HEX. SOCK. SCREW	VIS TETE HEX VITE PARKER ZYLINDERSCHRAUBE TORN.CAB.HUECA
22	1443769X1	➡ P203040 ∅ 17-27 X 2	**4**	WASHER	RONDELLE RONDELLA SCHEIBE ARANDELA

Cab Mountings Fixation Cabine Kabinenbefestigung Montaggio Cabina Monturas De Cabina	With Suspension Avec Suspension Mit Federung Con Sospensione Con Suspension	**110-10**	

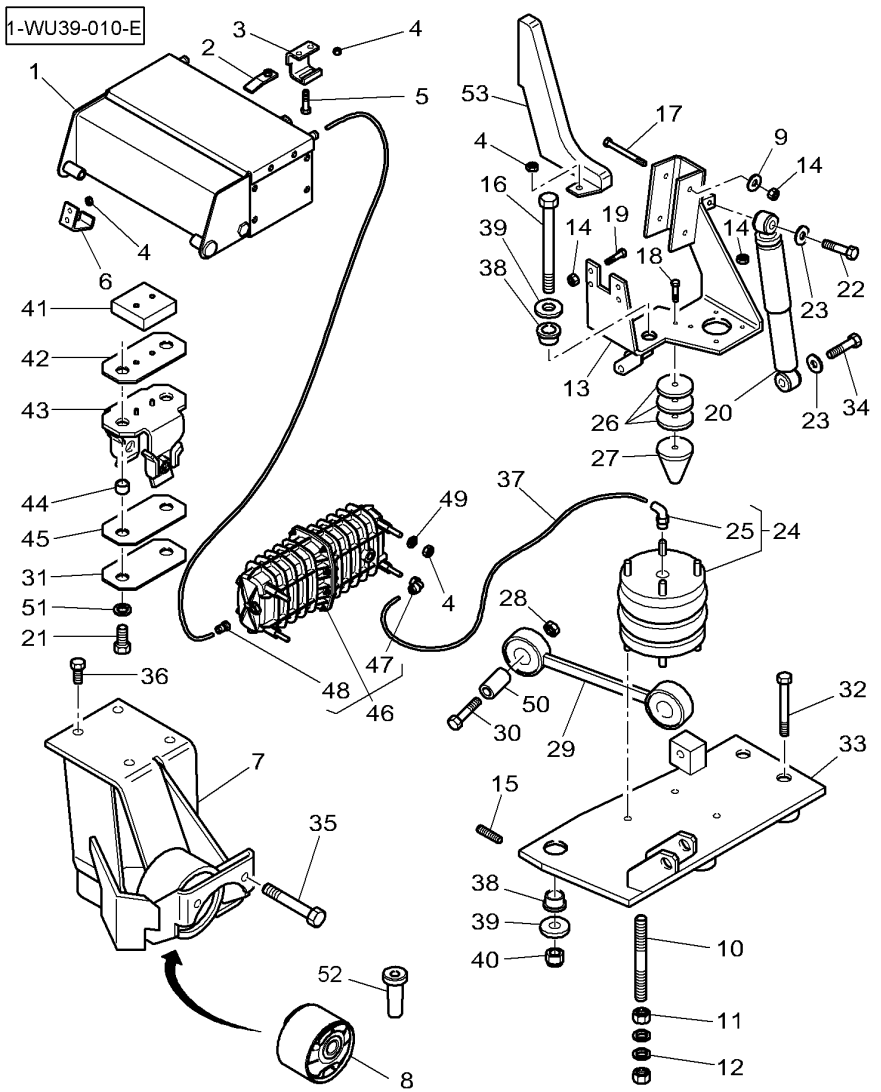

1	3787065M93	110-15 No	**1**	CONTROL BOX	BOITE COMMANDE CENTRALINA ELET.	SPANNUNGSREGLER CAJA DE CONTROL
2	3789906M2		**1**	SUPPORT	SUPPORT SOPPORTO	TRAGER SOPORTE
3	3789905M4		**1**	SUPPORT	SUPPORT SOPPORTO	TRAGER SOPORTE
4	339169X1	M8 17-JUL-2006	**12**	NUT	ECROU DADO	MUTTER TUERCA
4	394367X1	[A] M8	**X**	NUT	ECROU DADO	MUTTER TUERCA
5	3010182X1	M8 X 20	**6**	HEX. SOCK. SCREW	VIS TETE HEX VITE PARKER	ZYLINDERSCHRAUBE TORN.CAB.HUECA
5	339761X1	M8 X 25	**1**	HEX. SOCK. SCREW	VIS TETE HEX VITE PARKER	ZYLINDERSCHRAUBE TORN.CAB.HUECA
6	3789904M2		**2**	HINGE	CHARNIERE SNODO	SCHARNIER CHARNELA
7	4279013M93	◀	**1**	SUPPORT	SUPPORT SOPPORTO	TRAGER SOPORTE
7	4279014M93	▶	**1**	SUPPORT	SUPPORT SOPPORTO	TRAGER SOPORTE
8	3786281M2	7	**1**	TOGGLE	ROTULE ROTULA	GELENKZAPFEN ROTULA
9	385362X1		**8**	WASHER	RONDELLE RONDELLA	SCHEIBE ARANDELA
10	3786267M1	M16 X 300	**2**	STEM	TIGE ASTA DEL ZAPETTA	MESSERSTIEL VASTAGO
11	339034X1	M16	**4**	NUT	ECROU DADO	MUTTER TUERCA
12	3010875X1	∅ 16-30 X 5	**4**	WASHER	RONDELLE RONDELLA	SCHEIBE ARANDELA
13	4274968M1	◀	**1**	FOOT	PIED PIEDE	FUSS PIE
13	4274969M1	▶	**1**	FOOT	PIED PIEDE	FUSS PIE
14	339402X1	M10	**8**	NUT SPECIAL	ECROU SPECIAL DADO SPECIALE	SPEZIALMUTTER TUERCA ESPECIAL
15	4279690M1	M16 X 55	**2**	STEM	TIGE ASTA DEL ZAPETTA	MESSERSTIEL VASTAGO
16	3010613X1	M20 X 280	**2**	HEX. SOCK. SCREW	VIS TETE HEX VITE PARKER	ZYLINDERSCHRAUBE TORN.CAB.HUECA
17	339234X1	M10 X 120	**4**	HEX. SOCK. SCREW	VIS TETE HEX VITE PARKER	ZYLINDERSCHRAUBE TORN.CAB.HUECA
18	339291X1	M8 X 55	**2**	HEX. SOCK. SCREW	VIS TETE HEX VITE PARKER	ZYLINDERSCHRAUBE TORN.CAB.HUECA
19	3009493X1	M10 X 30 10-SEP-2006	**8**	HEX. SOCK. SCREW	VIS TETE HEX VITE PARKER	ZYLINDERSCHRAUBE TORN.CAB.HUECA
19	3009494X1	M10 X 35 11-SEP-2006	**8**	HEX. SOCK. SCREW	VIS TETE HEX VITE PARKER	ZYLINDERSCHRAUBE TORN.CAB.HUECA
20	4279945M1		**2**	SHOCK ABSORBER	AMORTISSEUR CHOC AMMORTIZZATORE	STOSSDAEMPFER AMORTIGUADOR
21	391120X1	M16 X 45	**4**	HEX. SOCK. SCREW	VIS TETE HEX VITE PARKER	ZYLINDERSCHRAUBE TORN.CAB.HUECA

Cab Mountings Fixation Cabine Kabinenbefestigung Montaggio Cabina Monturas De Cabina	With Suspension Avec Suspension Mit Federung Con Sospensione Con Suspension	110-10

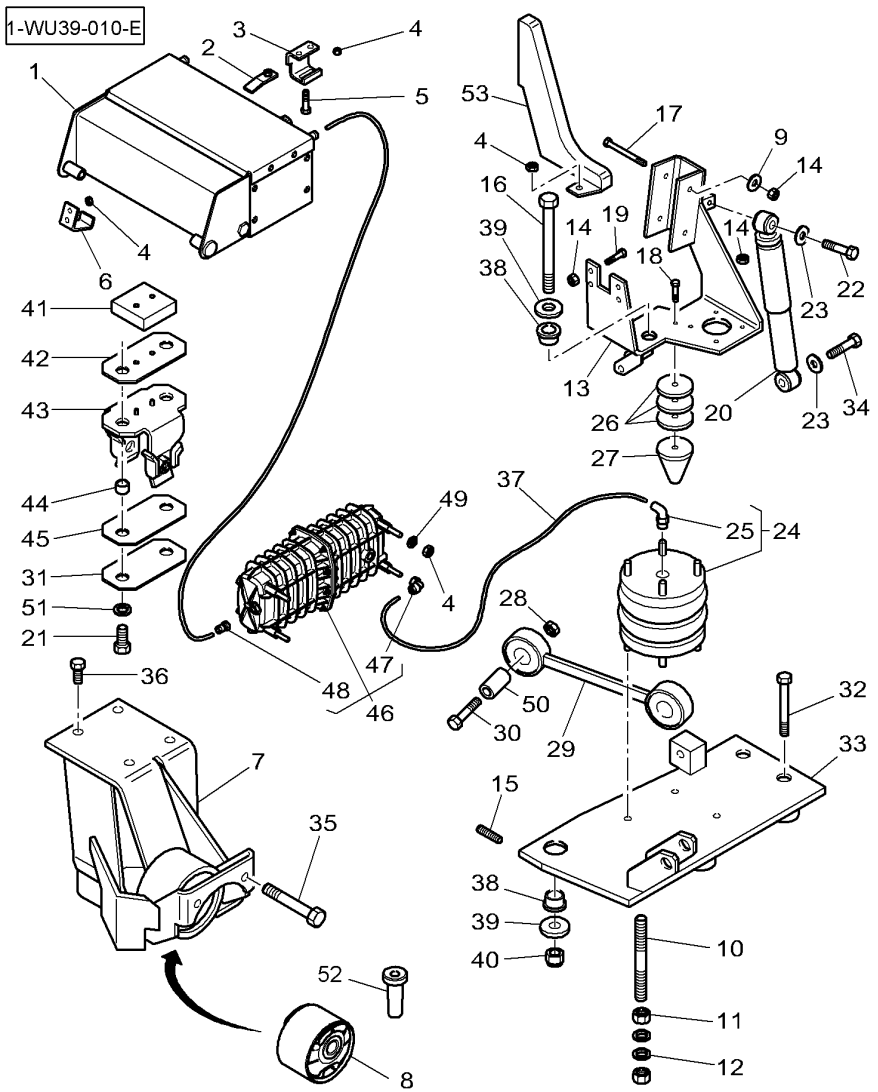

22	3009515X1	M12 X 80	**2**	HEX. SOCK. SCREW	VIS TETE HEX VITE PARKER	ZYLINDERSCHRAUBE TORN.CAB.HUECA
23	391212X1	∅ 13-37 X 3	**4**	WASHER	RONDELLE RONDELLA	SCHEIBE ARANDELA
24	**4273315M91**		**2**	SHOCK ABSORBER	AMORTISSEUR CHOC AMMORTIZZATORE	STOSSDAEMPFER AMORTIGUADOR
25	4271561M1	24	**1**	UNION	RACCORD RACCORDO	VERSCHRAUBUNG RACOR
26	3787081M1		**6**	CHOCK	CALE PASSACAVO	UNTERLEG-KEIL CALZA
27	4274350M1		**2**	STOP	BUTEE STOP	ANSCHLAG PARO
28	339034X1	M16	**4**	NUT	ECROU DADO	MUTTER TUERCA
29	4273003M92		**2**	LINKAGE	ARTICULATION TIRANTERIA	GESTAENGE VARILLAJE
30	3019865X1	M16 X 75	**4**	HEX. SOCK. SCREW	VIS TETE HEX VITE PARKER	ZYLINDERSCHRAUBE TORN.CAB.HUECA
31	4279533M1	⧗ 5 MM	**2**	PLATE	PLAQUE PIASTRA	PLATTE PLATO
32	390864X1	M16 X 80	**4**	HEX. SOCK. SCREW	VIS TETE HEX VITE PARKER	ZYLINDERSCHRAUBE TORN.CAB.HUECA
33	4274970M1	◀	**1**	SUPPORT	SUPPORT SOPPORTO	TRAGER SOPORTE
33	4274971M1	▶	**1**	SUPPORT	SUPPORT SOPPORTO	TRAGER SOPORTE
34	3009512X1	M12 X 60	**2**	HEX. SOCK. SCREW	VIS TETE HEX VITE PARKER	ZYLINDERSCHRAUBE TORN.CAB.HUECA
35	391914X1	M20 X 110	**2**	HEX. SOCK. SCREW	VIS TETE HEX VITE PARKER	ZYLINDERSCHRAUBE TORN.CAB.HUECA
36	390419X1	M16 X 40	**8**	HEX. SOCK. SCREW	VIS TETE HEX VITE PARKER	ZYLINDERSCHRAUBE TORN.CAB.HUECA
37	4278783M1		**2**	HYDR. HOSE	FLEXIBLE TUBOFLEX IDRAUL	HYDR. SCHLAUCH TUBO HIDRAULICO
38	3787068M1		**4**	BEARING CARRIER	PALIER CUSCINETTO SUPP.	LAGER GEHAEUSE COJINETE APOYO
39	3787069M1		**4**	THRUST WASHER	RONDELLE BUTEE RONDELLA REGGISP	ANLAUFSCHEIBE ARANDELA ACELER
40	3010067X1	M20	**2**	LOCKNUT	ECROU FREIN AUTOBLOCCANTE	SICHERUNGSMUTTER CONTRATUERCA
41	4271078M1		**2**	PLATE	PLAQUE PIASTRA	PLATTE PLATO
42	4274223M1	⧗ 3 MM ➡| 10-SEP-2006	**2**	PLATE	PLAQUE PIASTRA	PLATTE PLATO
42*	4288240M1	⧗ 3 MM ➡ 11-SEP-2006	**2**	PLATE	PLAQUE PIASTRA	PLATTE PLATO
43	4278827M92	➡ 10-SEP-2006	**2**	SUPPORT	SUPPORT SOPPORTO	TRAGER SOPORTE
43*	4288244M91	➡ 11-SEP-2006	**2**	SUPPORT	SUPPORT SOPPORTO	TRAGER SOPORTE
44	4274225M91	➡| 10-SEP-2006	**4**	SPACER	ENTRETOISE DISTANZIALE	ABSTANDSTUECK DISCO ESPACIADOR

Cab Mountings Fixation Cabine Kabinenbefestigung Montaggio Cabina Monturas De Cabina	With Suspension Avec Suspension Mit Federung Con Sospensione Con Suspension	**110-10**	

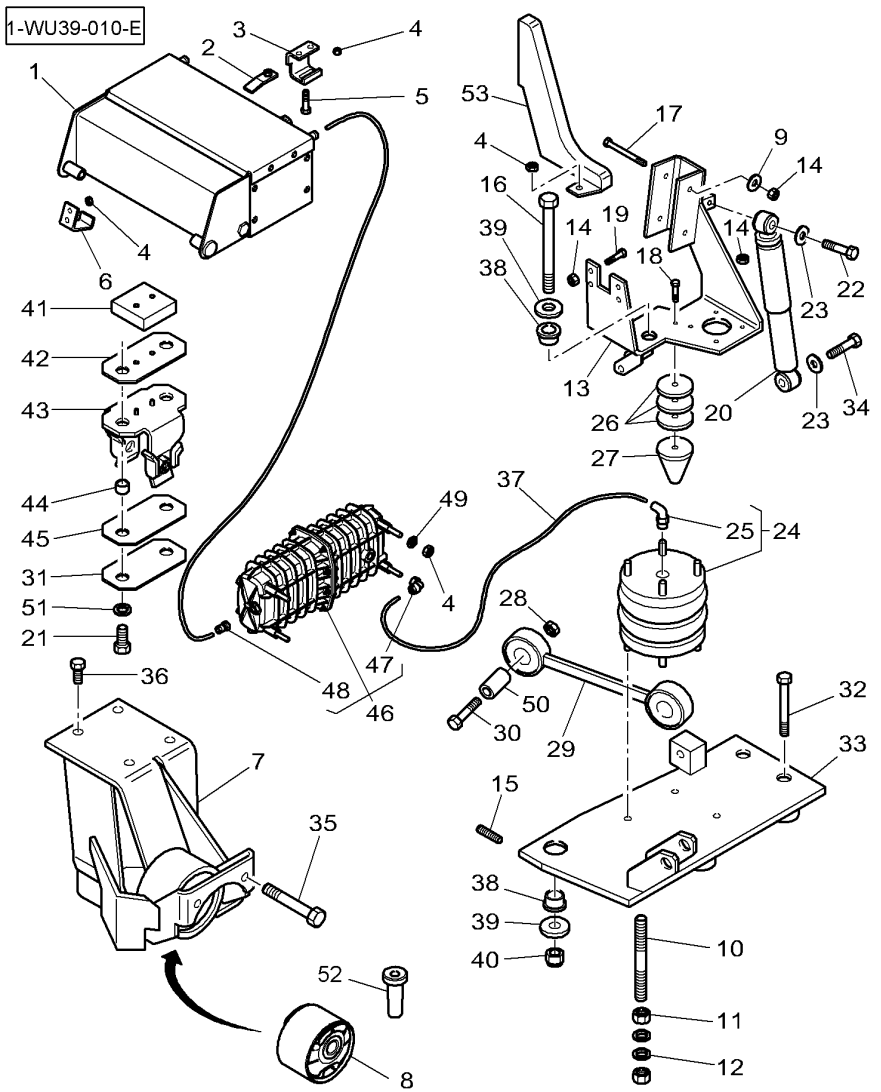

44*	4288200M91	➡	11-SEP-2006	**4** SPACER	ENTRETOISE DISTANZIALE	ABSTANDSTUECK DISCO ESPACIADOR
45	4275620M1	⧗ ➡	4 MM 10-SEP-2006	**2** PLATE	PLAQUE PIASTRA	PLATTE PLATO
45*	4288241M1	⧗ ➡	4 MM 11-SEP-2006	**2** PLATE	PLAQUE PIASTRA	PLATTE PLATO
46	4273332M92		2 L	**2** ACCUMULATOR	ACCUMULATEUR ACCUMULATORE	AKKUMULATOR ACUMULADOR
47	4274577M1		46	**1** UNION	RACCORD RACCORDO	VERSCHRAUBUNG RACOR
48	4273336M1		46	**1** UNION	RACCORD RACCORDO	VERSCHRAUBUNG RACOR
49	390597X1	∅	10-30 X 2,5	**6** FLAT WASHER	RONDELLE PLATE RONDELLE PIANA	UNTERLEGSCHEIBEN ARANDELA PLANA
50	4275897M1			**4** SPACER	ENTRETOISE DISTANZIALE	ABSTANDSTUECK DISCO ESPACIADOR
51	1443769X1	➡ ∅	P203040 17-27 X 2	**4** WASHER	RONDELLE RONDELLA	SCHEIBE ARANDELA
52*	3787578M1			**1** PLUG	BOUCHON TAPPO	STOPFEN TAPON
53	4278784M2	▶		**1** COWL	GARANT CAPPOTTATURA	AUFSATZ CAPERUZA
53	4278785M2	◀		**1** COWL	GARANT CAPPOTTATURA	AUFSATZ CAPERUZA

[A] CHECK NUT
ECROU AUTOFREINE
MUTTER SELBST BREMST
DADO AUTOFREINAR
TUERCA AUTOFREINAR

Suspended Cab Control Unit
Boite De Commande Cabine Suspendue
Steuereinheit Aufgehangtes Fahrerhaus
Centralina Di Comando Cabina Sospesa
Caja De Mando Cabina Suspendida

110-15

1-WU46-001-B

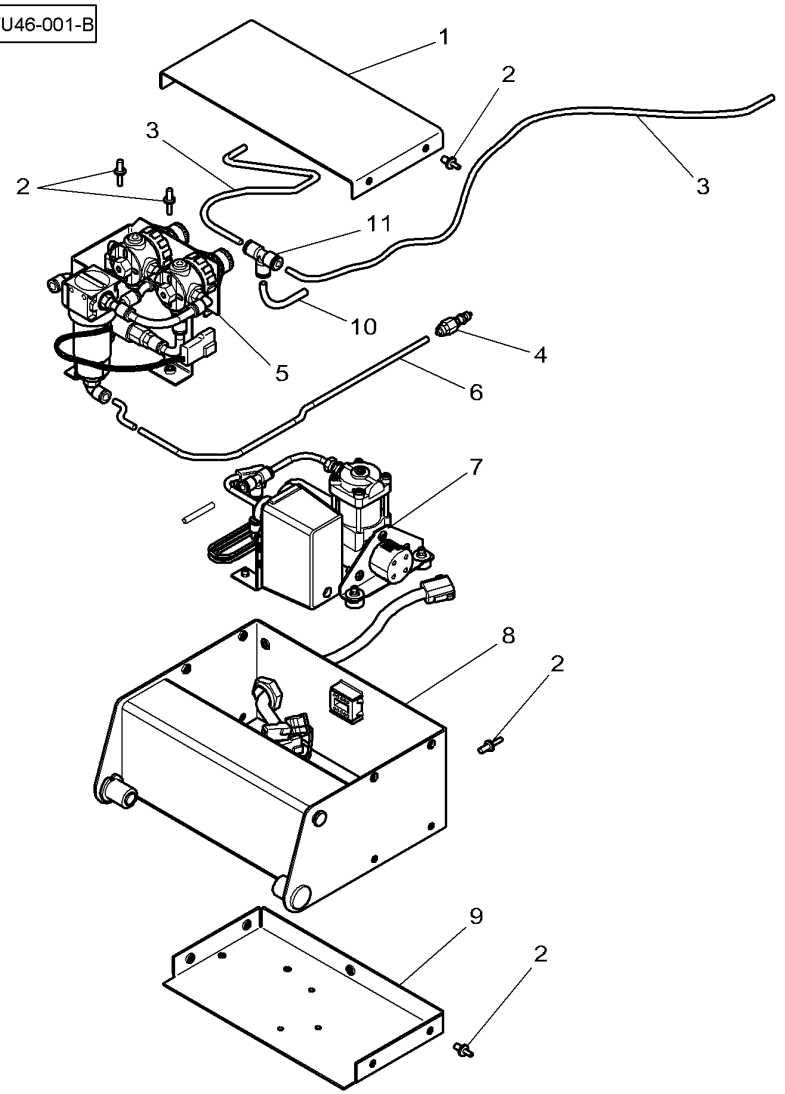

1	4275950M1		**1**	COVER	COUVERCLE COPERCHIO	ABDECKUNG. CUBIERTA
2	3007920X1	M6 X 12	**11**	SCREW	VIS VITE	SCHRAUBE TORNILLO
3*	4274331M1	◄► 630 MM	**2**	PIPE	TUYAU TUBO	TUBE TUBO
4	4275874M91		**1**	BLOW OFF VALVE	VALVE DE PURGE VALVOLA COMPRESS	UEBERDRUCKVENTIL VALVULA DESCARGA
5*		👁 110-20 No	**1**	KIT, AIR CLEANER	JEU FILTRE A AIR KIT FILTRO ARIA	LUFTFILTER-SATZ JUEGO FILT.AIRE.
6	4275963M1		**1**	PIPE	TUYAU TUBO	TUBE TUBO
7		👁 110-25 No	**1**	COMPRESSOR	COMPRESSEUR COMPRESSORE	KOMPRESSOR COMPRESOR
8		👁 110-30 No	**1**	AIR TANK	RESERVOIR D'AIR SERBATOIO ARIA	LUFTBEHAELTER DEPOSITO DE AIRE
9	4275951M1		**1**	PLATE	PLAQUE PIASTRA	PLATTE PLATO
10		REF. 6	**1**	TAIL PIPE	TUBE ECHAPPEMENT TUBO SCAPPAMENTO	AUSPUFFROHR TUBO DE ESCAPE
11	4275947M1		**1**	UNION	RACCORD RACCORDO	VERSCHRAUBUNG RACOR

Suspended Cab Control Unit
Boite De Commande Cabine Suspendue
Steuereinheit Aufgehangtes Fahrerhaus
Centralina Di Comando Cabina Sospesa
Caja De Mando Cabina Suspendida

110-20

Pressue Regulator And Filter
Regulateur De Pression Et Filtre
Druckregler Regelventil Und Filter
Regolatore Di Pressione I Filtro
Regulador De Presion Y Filtro

1-WU46-005-A

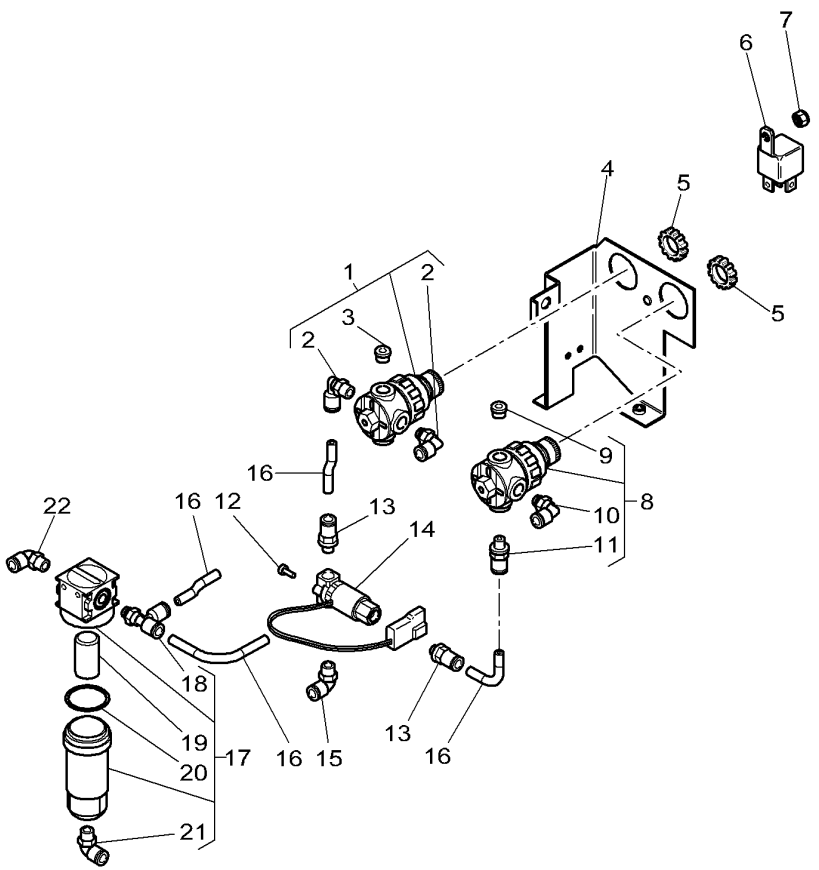

1	4275825M92	2,65 Bars	**1**	REGULATOR	REGULATEUR REGOLATORE	REGLER REGULADOR
2	3907585M1	1 1/8"- 6/4	**2**	UNION	RACCORD RACCORDO	VERSCHRAUBUNG RACOR
3	4275909M1	1 1/8"	**1**	PLUG	BOUCHON TAPPO	STOPFEN TAPON
4	4275921M1		**1**	PLATE	PLAQUE PIASTRA	PLATTE PLATO
5	3907551M1		**2**	NUT	ECROU DADO	MUTTER TUERCA
6	4275922M1		**1**	RELAY	RELAIS RELE	RELAIS RELE
7	3019139X1		**1**	NUT	ECROU DADO	MUTTER TUERCA
8	4275824M92	2,10 Bars	**1**	REGULATOR	REGULATEUR REGOLATORE	REGLER REGULADOR
9	4275909M1	8 1/8"	**1**	PLUG	BOUCHON TAPPO	STOPFEN TAPON
10	3907585M1	8 1/8"- 6/4	**1**	UNION	RACCORD RACCORDO	VERSCHRAUBUNG RACOR
11	3907586M1	8 1/8"- 6/4	**1**	UNION	RACCORD RACCORDO	VERSCHRAUBUNG RACOR
12	3019880X1	M4 X 12	**2**	SCREW METRIC	VIS METRIQUE VITE METRICA	SCHRAUBE METR TORNILLO METRICO
13	3907586M1		**2**	UNION	RACCORD RACCORDO	VERSCHRAUBUNG RACOR
14	4275916M1		**1**	ELECTROVALVE	ELECTROVANNE ELETTROVALVOLA	ELECTRON.VENTIL ELECTROVALVULA
15	3907585M1		**1**	UNION	RACCORD RACCORDO	VERSCHRAUBUNG RACOR
16	4275963M1	[A] ◀▶ 1135 mm	**X**	PIPE	TUYAU TUBO	TUBE TUBO
17	4275814M91		**1**	FILTER	FILTRE FILTRO	FILTER FILTRO
18	4275914M1	17	**1**	TEEPIECE	TE RACCORDO A T	T-STUECK PIEZA EN T
19	4276397M1	17	**1**	FILTER ELEMENT	ELEMENT FILTRANT ELEMENTO FILTRAN	FILTEREINSATZ ELEMENTO FILTRAN
20	4276396M1	17	**1**	O RING	JOINT TORIQUE GIUNTO DI TENUTA	O-RING JUNTA TOROIDAL
21	3907585M1	17	**1**	UNION	RACCORD RACCORDO	VERSCHRAUBUNG RACOR
22	3907585M1		**1**	UNION	RACCORD RACCORDO	VERSCHRAUBUNG RACOR

[A] CUT TO REQUIRED LENGTH
COUPER A LA LONGEUR DESIREE
BENOETIGTE LAENGE ABSCHNEIDEN
TAGLIARE ALLA LUNGHEZZA DESIDERATA
CORTAR A LA LONGITUD DESEADA

Suspended Cab Control Unit Boite De Commande Cabine Suspendue Steuereinheit Aufgehangtes Fahrerhaus Centralina Di Comando Cabina Sospesa Caja De Mando Cabina Suspendida	**110-25**	**Compressor** **Compresseur** **Kompressor** **Compressore** **Compresor**

1-WU46-003-B

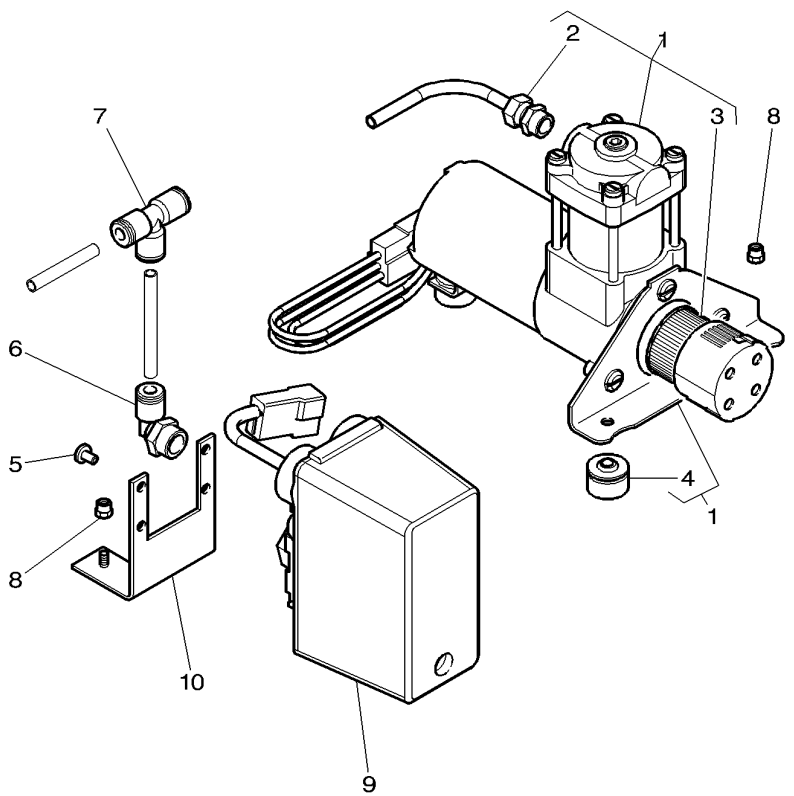

1	4275812M91		**1**	COMPRESSOR	COMPRESSEUR COMPRESSORE	KOMPRESSOR COMPRESOR
2	4277531M91	1	**1**	TUBE	TUBE TUBO.	ROHR TUBO.
3	4277532M91	1	**1**	FILTER	FILTRE FILTRO	FILTER FILTRO
4	4275977M1	1	**2**	VIBRATION MOUNT	SILENT BLOC ANTIVIBRANTE	METALLGUM.PUFFER MONTAJE ANTI-VIB
5	3009530X1	M4 X 8	**2**	SCREW	VIS VITE	SCHRAUBE TORNILLO
6	4275942M1		**1**	UNION	RACCORD RACCORDO	VERSCHRAUBUNG RACOR
7	4275947M1		**1**	UNION	RACCORD RACCORDO	VERSCHRAUBUNG RACOR
8	3019139X1		**5**	NUT	ECROU DADO	MUTTER TUERCA
9	4275943M91		**1**	REGULATOR	REGULATEUR REGOLATORE	REGLER REGULADOR
10	4275944M1		**1**	ANGLE.	EQUERRE. ANGOLO	WINKEL ANGULO

Suspended Cab Control Unit
Boite De Commande Cabine Suspendue
Steuereinheit Aufgehangtes Fahrerhaus
Centralina Di Comando Cabina Sospesa
Caja De Mando Cabina Suspendida

110-30

Air Tank
Reservoir D'Air
Lufttank
Serbatoio Di Aria
Deposito De Aire

1-WU46-004-A

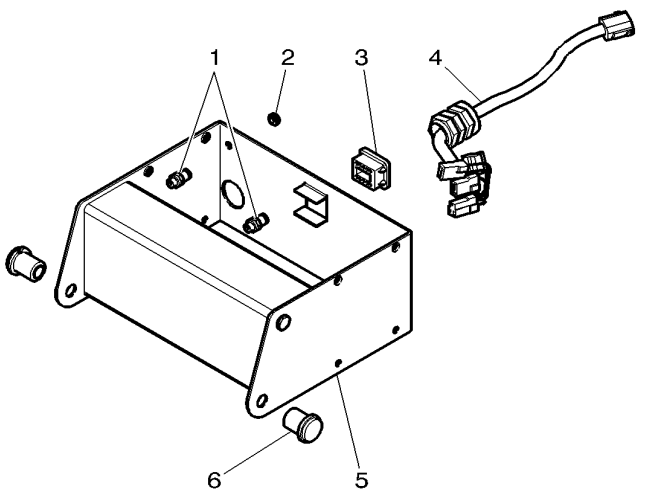

1	4273336M1	**2**	UNION	RACCORD RACCORDO	VERSCHRAUBUNG RACOR
2	4275937M1	**3**	GROMMET	PASSE FIL ANELLO PASSACAVO	GUMMITUELLE PASACABLE
3	4275939M1	**1**	LATCH	VERROU DENTE DI ARRESTO	KLINKE TOPE
4	4275910M2	**1**	HARNESS	FAISCEAU FASCIOCAVI	KABELBAUM MAZO CABLES
5	4274301M1	**1**	BOX	BOITE SCATOLA	DOSE CAJA
6	4275938M1	**2**	SLEEVE	MANCHON MANICOTTO	HUELSE MANGUITO

Tractor Cab
Cabine Tracteur
Schlepperkabine
Cabina Trattore
Cabina Tractor

110-35

1-WU03-008-B

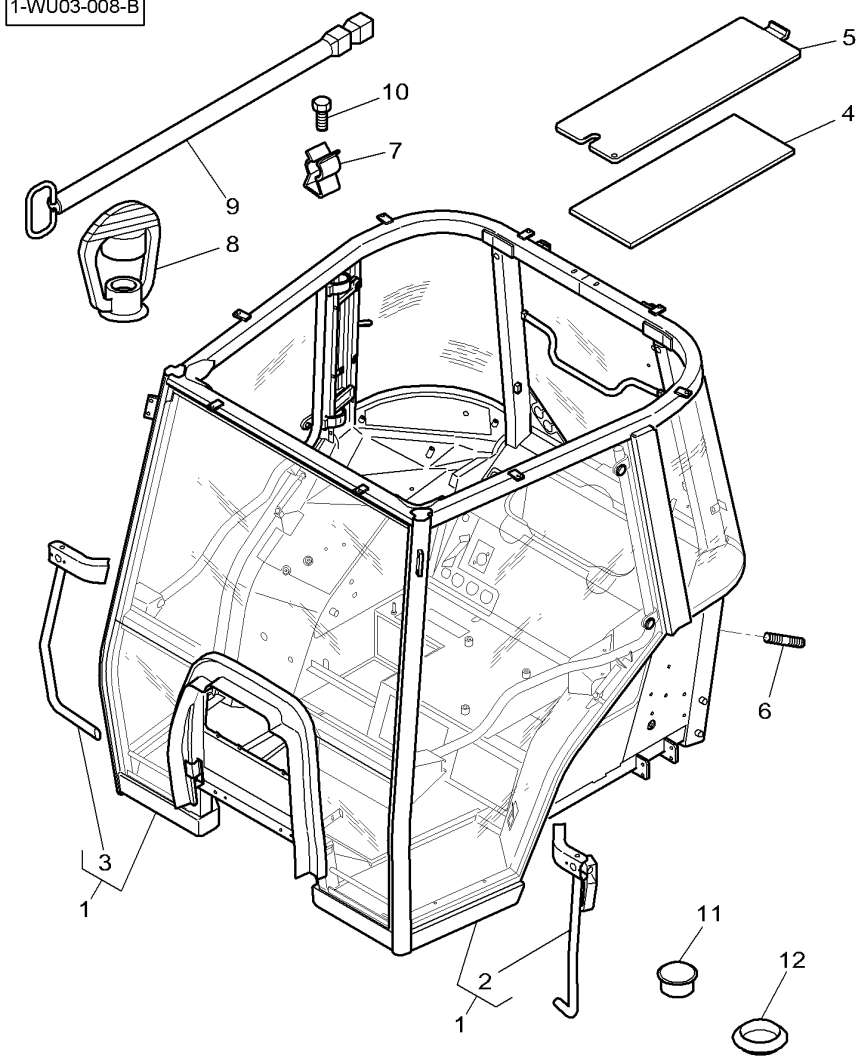

1*	4279923M94	[B]	**1**	CAB	CABINE CABINA	KABINE CABINA
1*	4279924M94	[C]	**1**	CAB	CABINE CABINA	KABINE CABINA
2	3907537M1	1 ◀	**1**	GUIDEWAY	RAMBARDE ROTAIA	FUEHRUNGSSCHIENE RIEL DE GUIA
3	3907481M1	1 ▶	**1**	GUIDEWAY	RAMBARDE ROTAIA	FUEHRUNGSSCHIENE RIEL DE GUIA
4	4273198M1		**1**	FOAM	MOUSSE GOMMAPIUMA	SCHAUMSTOFF ESPUMA
5	4273193M1		**1**	TRAP	TRAPPE TRAPPOLA	FANGKLAPPE PURGADOR
6	3011204X1	[D] M8 X 40	**1**	STUD	GOUJON SPINOTTO FILETT.	STEHBOLZEN ESPARRAGO ROSCA.
7	4276502M1		**2**	CLIP	PATTE D'ATTACHE FERMAGLIO	SCHELLE CLIP
8	3617859M1		**1**	HELMET	CAPUCHON CASCO	SCHUTZHELM CASCO
9	G701100090800		**1**	TOOL	OUTIL UTENSILE	WERKZEUG HERRAMIENTA
10	3009285X1	M8 X 16	**2**	SCREW	VIS VITE	SCHRAUBE TORNILLO
11*	3041932M1	[A] ∅ 13-19 MM	**1**	PLUG	BOUCHON TAPPO	STOPFEN TAPON
12*	4289049M1	[E] ∅ 28 MM		PLUG	BOUCHON TAPPO	STOPFEN TAPON

[A] WITHOUT AUTOMATIC HITCH
SANS CROCHET AUTOMATIQUE
OHNE AUTOMATISCHE ANHAENGEKUPPLUNG
SENZA GANCIO AUTOMATICO
SIN ENGANCHE AUTOMATICO

[B] WITH FRONT SCREEN 5MM
AVEC PARE BRISE 5MM
MIT WINDSCHUTZSCHEIB 5MM
CON PARABREZZA 5MM
CON PARABRISAS 5MM

[C] WITH FRONT SCREEN 6MM
AVEC PARE BRISE 6MM
MIT WINDSCHUTZSCHEIB 6MM
CON PARABREZZA 6MM
CON PARABRISAS 6MM

[D] GROUND CABLE
CABLE DE MASSE
MASSEKABEL
FILO DI MASSA
CABLE DE MASA

Tractor Cab
Cabine Tracteur
Schlepperkabine
Cabina Trattore
Cabina Tractor

110-35

1-WU03-008-B

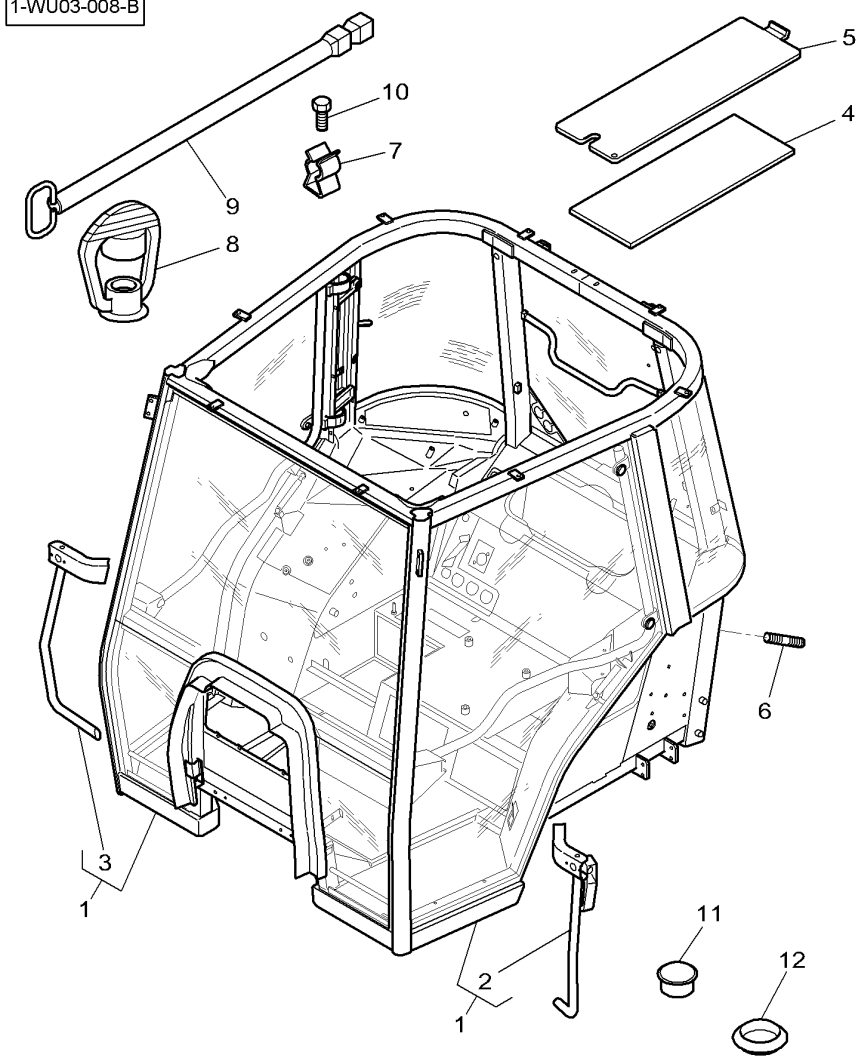

[E] WIHTOUT FRONT LOADER
SANS CHARGEUR AVANT
OHNE VORDERE LADEVORRICHTUNG
SENZA CARICATORE ANTERIORE
SIN EL CARGADOR DELANTERO

Doors
Portes
Tuer
Porta
Puerta

110-40

1-WU05-002-D

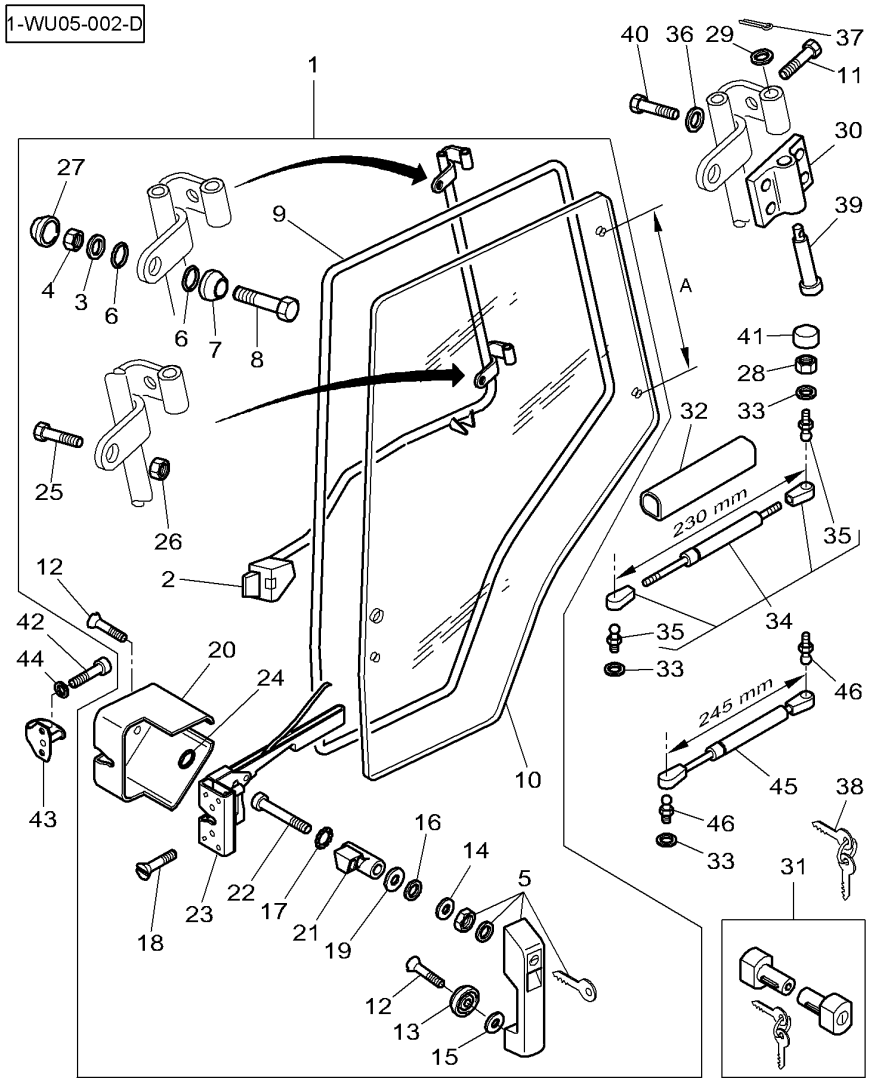

1*	4275243M93	▶	**1**	GATE	PORTE CANCELLO	TOR PORTILLO
1*	4275242M92	◀	**1**	GATE	PORTE CANCELLO	TOR PORTILLO
2*	4272772M2	1 ◀	**1**	GUIDEWAY	RAMBARDE ROTAIA	FUEHRUNGSSCHIENE RIEL DE GUIA
2*	4272773M3	1 ▶	**1**	GUIDEWAY	RAMBARDE ROTAIA	FUEHRUNGSSCHIENE RIEL DE GUIA
3	385361X1	1 ∅ 9-17 X 3,2	**2**	WASHER	RONDELLE RONDELLA	SCHEIBE ARANDELA
4	394367X1	1 M8	**2**	NUT	ECROU DADO	MUTTER TUERCA
5	3902356M91	1 [A] No 610	**1**	GRIP	POIGNEE MANIGLIA	HANDGRIFF MANGO
6	3902365M1	1 ∅ 8-30 X 3	**2**	WASHER	RONDELLE RONDELLA	SCHEIBE ARANDELA
7	4276449M1	1	**2**	RUBBER BUSH	BAGUE CAOUTCHO RUBBER BUSH	GUMMIBUCHSE RUBBER BUSH
8	3009444X1	1 M8 X 40	**2**	SCREW	VIS VITE	SCHRAUBE TORNILLO
9*	3902122M1	1	**1**	SEAL	JOINT ETANCHEITE GIUNTO ROTONDO	DICHTRING JUNTA REDONDA
10*	4272775M1	1 ▶ A = 600 MM	**1**	WINDOW	GLACE FINESTRINO	FENSTER VENTANA
10*	4272774M1	1 ◀ A = 600 MM	**1**	WINDOW	GLACE FINESTRINO	FENSTER VENTANA
11	1442900X1	1 M8 X 55 ⇒ 3008857X1	**1**	SCREW	VIS VITE	SCHRAUBE TORNILLO
12	3902411M1	1 M6 X 16	**2**	SCREW	VIS VITE	SCHRAUBE TORNILLO
13	3902145M1	1	**1**	SKATE	PATIN PATTINO	SCHLITTEN-KUFE PATIN
14	3902366M1	1 ∅ 28-42 X 2	**1**	WASHER	RONDELLE RONDELLA	SCHEIBE ARANDELA
15	3902367M1	1 ∅ 5-18 X 1	**1**	WASHER	RONDELLE RONDELLA	SCHEIBE ARANDELA
16	3011035X1	1 ∅ 6-12 X 1,5	**1**	WASHER	RONDELLE RONDELLA	SCHEIBE ARANDELA
17	391289X1	1	**1**	SPRING WASHER	RONDELLE ELASTIQ RONDELLA ELASTI.	FEDERSCHEIBE ARANDELA ELASTI.
18*	3010775X1	1 M6 X 25	**6**	SCREW	VIS VITE	SCHRAUBE TORNILLO
19	391038X1	1 ∅ 6-18 X 1,5	**1**	FLAT WASHER	RONDELLE PLATE RONDELLA PIANA	UNTERLEGSCHEIBEN ARANDELA PLANA
20	4276448M1	1 ▶	**1**	MUFF	CACHE MANICOTTO DEVIAN	FLANSCHMUFFE MANGUITO ACOPLAM
20	4276447M1	1 ◀	**1**	MUFF	CACHE MANICOTTO DEVIAN	FLANSCHMUFFE MANGUITO ACOPLAM
21	3903504M1	1	**1**	LATCH	VERROU DENTE DI ARRESTO	KLINKE TOPE
22	3001757X1	1 M6 X 40	**1**	BOLT	BOULON BULLONE	BOLZEN BULON

Doors
Portes
Tuer
Porta
Puerta

110-40

1-WU05-002-D

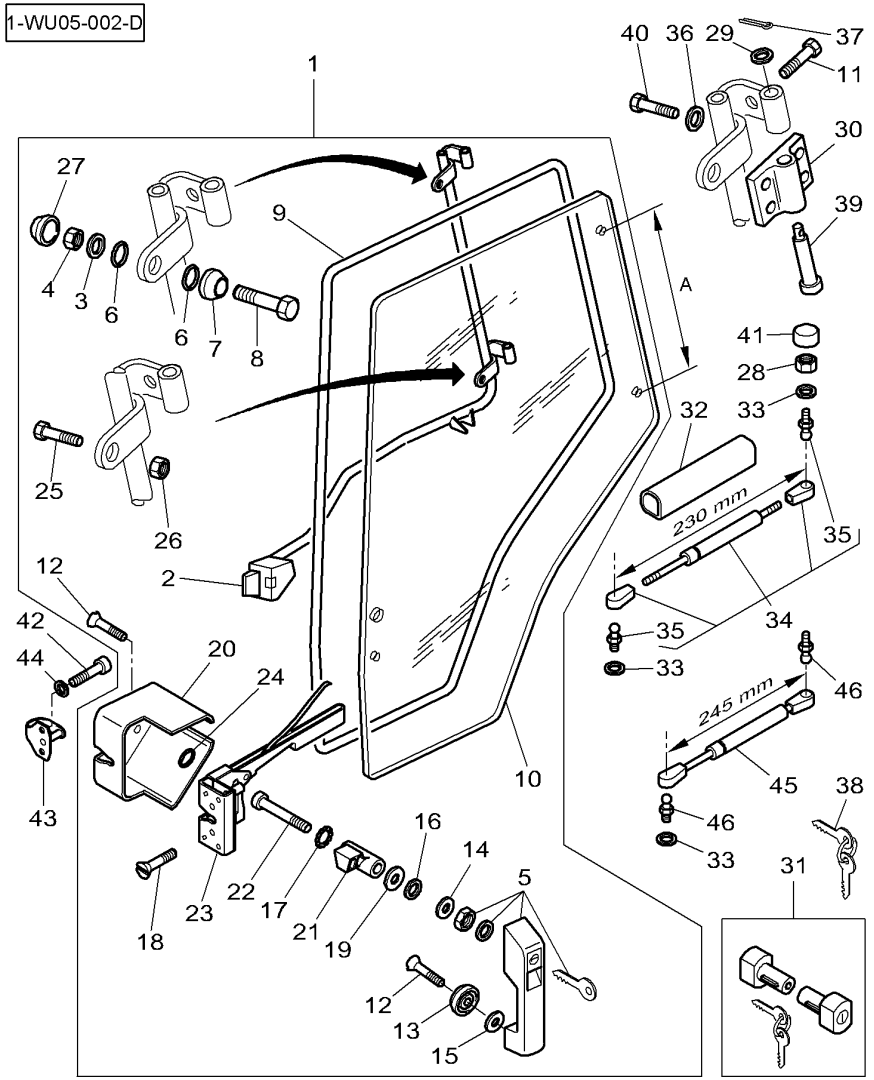

23	3804663M1	1 ◀		**1**	LATCH	VERROU	KLINKE
						DENTE DI ARRESTO	TOPE
23	3804662M1	1 ▶		**1**	LATCH	VERROU	KLINKE
						DENTE DI ARRESTO	TOPE
24	4276446M1	1 ∅ 14-28 X 3		**1**	WASHER	RONDELLE	SCHEIBE
						RONDELLA	ARANDELA
25	339091X1	1 M8 X 45		**1**	HEX. SOCK. SCREW	VIS TETE HEX	ZYLINDERSCHRAUBE
						VITE PARKER	TORN.CAB.HUECA
26	339169X1	1 M8		**1**	NUT	ECROU	MUTTER
						DADO	TUERCA
27	3616277M1	1		**2**	HELMET	CAPUCHON	SCHUTZHELM
						CASCO	CASCO
28	339169X1	M8		**2**	NUT	ECROU	MUTTER
						DADO	TUERCA
29	3903187M1	∅ 12-22 X 1,2		**4**	WASHER	RONDELLE	SCHEIBE
						RONDELLA	ARANDELA
30	3902116M1			**4**	HINGE	CHARNIERE	SCHARNIER
						SNODO	CHARNELA
31	3902370M91	No 610		**1**	PARTS PACK	JEU PIECES	SATZ TEILE
						PACCO RICAMBI	PAQUETE PIEZAS
32	3902415M1			**2**	PROTECTOR	PROTECTEUR	SCHUTZ
						PROTETTORE	PROTECTOR
33	391025X1			**4**	TOOTH WASHER	RONDELLE DENTEE	ZAHNSCHEIBE
						ROSETTA DENTATA	ARANDELA ESTRELL
34	**3902121M4**	◀		**1**	RAM	VERIN	HYDR.ZYLINDER
		◀▶ 230MM				CILINDRO IDRAUL.	ARIETE
		2221 QY 600N					
34	4279925M1	▶		**1**	RAM	VERIN	HYDR.ZYLINDER
		8716 UO 400N				CILINDRO IDRAUL.	ARIETE
35	3902773M1	34		**2**	TOGGLE	ROTULE	GELENKZAPFEN
						ROTULA	ROTULA
36	385361X1	∅ 9-17 X 3,2		**16**	WASHER	RONDELLE	SCHEIBE
						RONDELLA	ARANDELA
37	1442963X1	∅ 2,5 X 32		**4**	SPLIT PIN	GOUPILLE FENDUE	SPALTBOLZEN
						COPIGLIA	PASADOR HENDIDO
38	**3902584M91**			**1**	KIT, SPANNER	JEU CLES	SCHLUESSEL-SATZ
						KIT CHIAVE	JUEGO ALICATES
39	3903186M1			**4**	CLEVIS PIN	AXE	SPLINTBOLZEN
						PERNO D'ATTACCO	BULON CILINDRICO
40	3902414M1	M8 X 20		**16**	SCREW	VIS	SCHRAUBE
						VITE	TORNILLO
41	3616277M1			**2**	HELMET	CAPUCHON	SCHUTZHELM
						CASCO	CASCO
42	3010775X1	M6 X 25		**4**	SCREW	VIS	SCHRAUBE
						VITE	TORNILLO
43	3902372M1			**2**	LATCH	VERROU	KLINKE
						DENTE DI ARRESTO	TOPE
44	391038X1	∅ 6-18 X 1,5		**4**	FLAT WASHER	RONDELLE PLATE	UNTERLEGSCHEIBEN
						RONDELLE PIANA	ARANDELA PLANA
45*	4286448M1	◀		**1**	RAM	VERIN	HYDR.ZYLINDER
		◀▶ 245MM				CILINDRO IDRAUL.	ARIETE
		0487 YJ 600N					

Doors
Portes
Tuer
Porta
Puerta

110-40

1-WU05-002-D

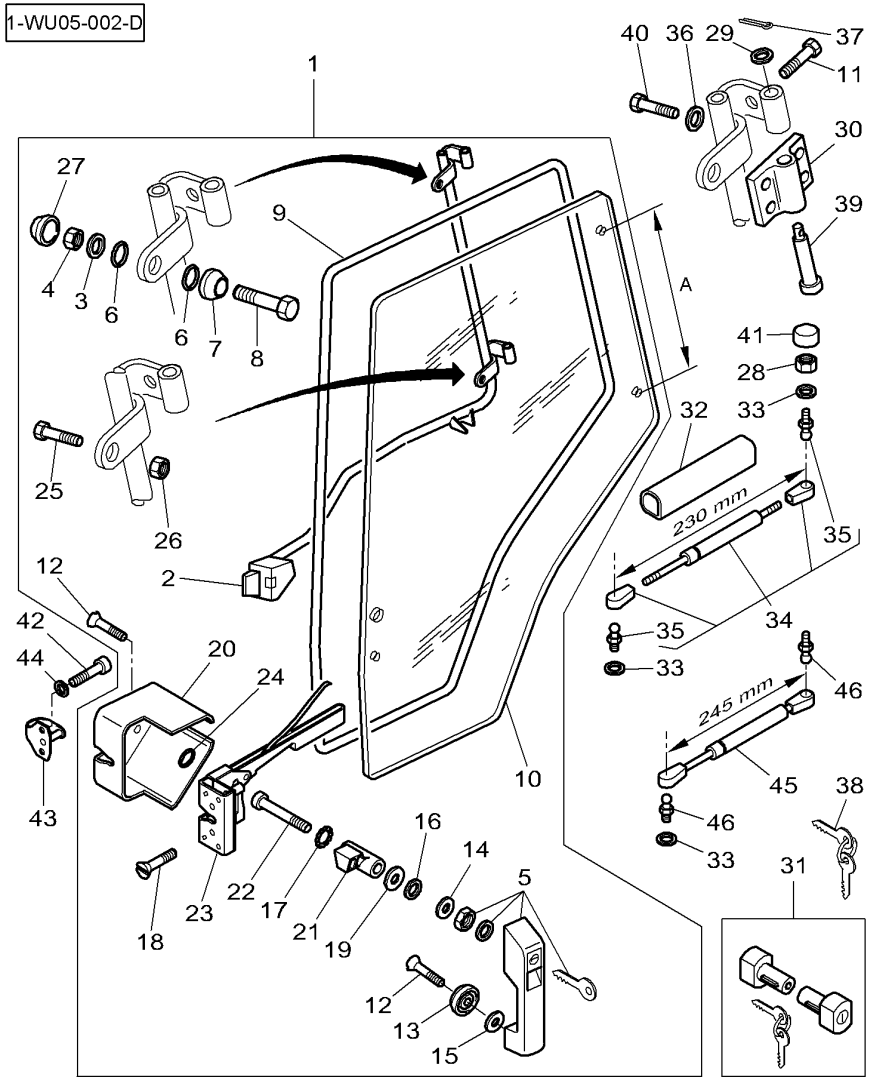

46*	3903200M1	**2** TOGGLE	ROTULE ROTULA	GELENKZAPFEN ROTULA

[A] NUMBER STAMPED ON THE LOCK
NUMERO GRAVE SUR LA SERRURE
NUMMER RITZT AUF DER SCHLOSS
NUMERO SOPRA LA TOPPA
NUMERO GRABAR EN EL SERRADURA

Glass
Vitres
Scheiben
Vetro
Cristal

110-45

1-WU06-001-D

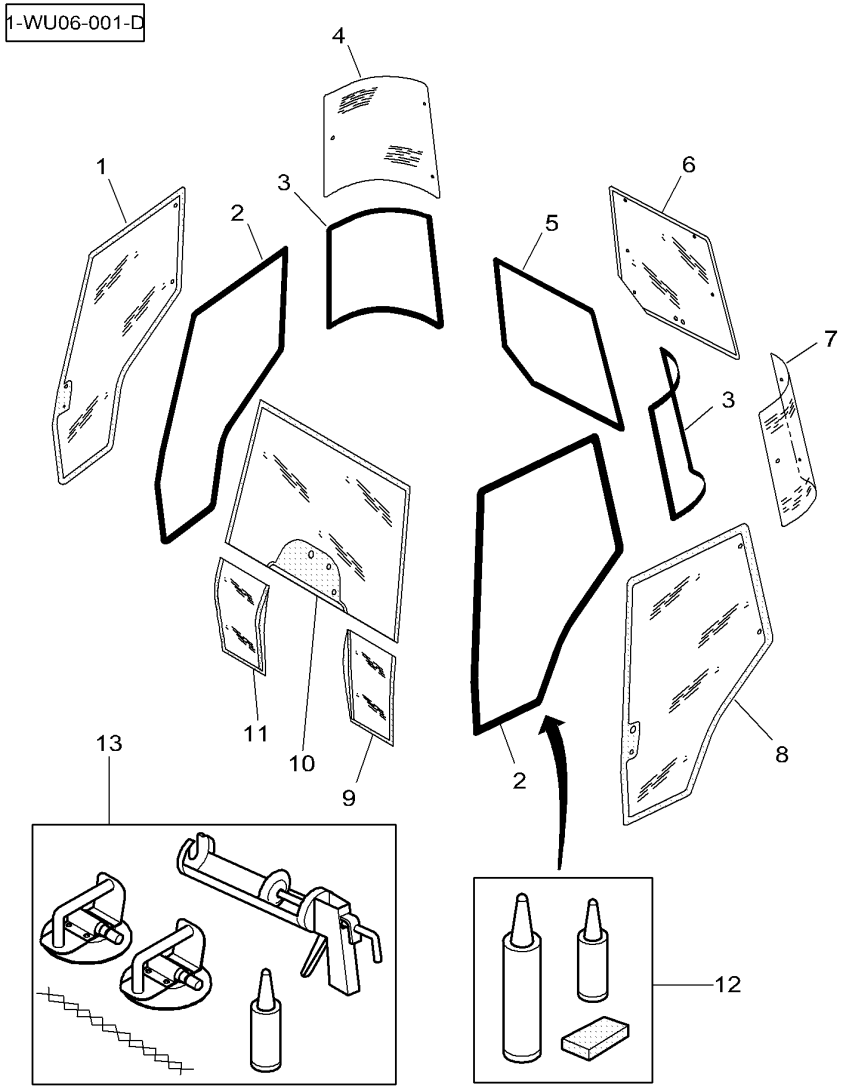

1*	4272775M1	▶	**1**	WINDOW	GLACE FINESTRINO	FENSTER VENTANA
2	3902122M1		**2**	SEAL	JOINT ETANCHEITE GIUNTO ROTONDO	DICHTRING JUNTA REDONDA
3	3902133M1		**2**	SEAL	JOINT ETANCHEITE GIUNTO ROTONDO	DICHTRING JUNTA REDONDA
4	3902131M1	▶	**1**	WINDOW	GLACE FINESTRINO	FENSTER VENTANA
5	3902144M1		**1**	SEAL	JOINT ETANCHEITE GIUNTO ROTONDO	DICHTRING JUNTA REDONDA
6	3715438M1		**1**	WINDOW	GLACE FINESTRINO	FENSTER VENTANA
7	3902130M1	◀	**1**	WINDOW	GLACE FINESTRINO	FENSTER VENTANA
8*	4272774M1	◀	**1**	WINDOW	GLACE FINESTRINO	FENSTER VENTANA
9	3902149M1	◀	**1**	WINDOW	GLACE FINESTRINO	FENSTER VENTANA
10	4273518M1	⧗ 6,00 mm	**1**	WINDSCREEN	PARE BRISE PARABREZZA	WINDSCHUTZSCHEIB PARABRISAS
10*	4273519M1	⧗ 5,00 mm	**1**	WINDSCREEN	PARE BRISE PARABREZZA	WINDSCHUTZSCHEIB PARABRISAS
11	3902150M1	▶	**1**	WINDOW	GLACE FINESTRINO	FENSTER VENTANA
12	3902373M93		**1**	GLAZING KIT	COLLAGE VITRE GLAZING KIT	FENST.ZUSAKLEBEN GLAZING KIT
13	3902503M91		**1**	PARTS PACK	JEU PIECES PACCO RICAMBI	SATZ TEILE PAQUETE PIEZAS

Side Window Mechanism
Mecanisme De Glace Laterale
Seitenfenster Ausstellvor
Comando Finestra Laterale
Mecanismo De Ventana Lateral

110-50

1-WU85-001-C

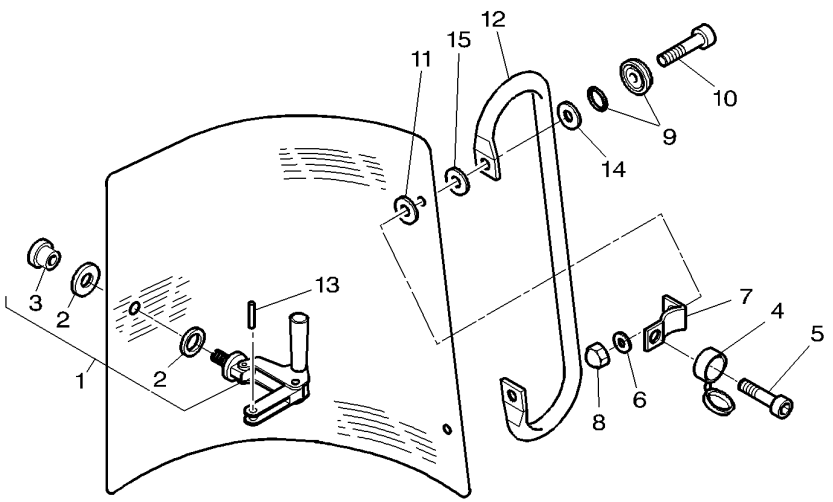

1	3476132M91	▶	**1**	STAY	HAUBAN BUSTO	STREBE TIRANTE
1	3476133M91	◀	**1**	STAY	HAUBAN BUSTO	STREBE TIRANTE
2	3478052M1	1	**2**	WASHER	RONDELLE RONDELLA	SCHEIBE ARANDELA
3	3478051M1	1	**2**	NUT	ECROU DADO	MUTTER TUERCA
4	3902129M1		**4**	MUFF	CACHE MANICOTTO DEVIAN	FLANSCHMUFFE MANGUITO ACOPLAM
5	3010775X1	M6 X 25	**4**	SCREW	VIS VITE	SCHRAUBE TORNILLO
6*	3011035X1	∅ 6-12 X 1,5	**4**	WASHER	RONDELLE RONDELLA	SCHEIBE ARANDELA
7	3902128M1		**4**	HINGE	CHARNIERE SNODO	SCHARNIER CHARNELA
8	3902455M1	M6	**4**	CAP NUT	ECROU BORGNE DADO A CAPPELLO	HUTMUTTER TUERCA DE TAPA
9	3902145M1		**4**	SKATE	PATIN PATTINO	SCHLITTEN-KUFE PATIN
10*	4275839M1	M6 X 35	**4**	SCREW	VIS VITE	SCHRAUBE TORNILLO
11	3903189M1	∅ 10,9-30 X 2	**4**	WASHER	RONDELLE RONDELLA	SCHEIBE ARANDELA
11	3902365M1	∅ 8-30 X 3	**4**	WASHER	RONDELLE RONDELLA	SCHEIBE ARANDELA
12	3783201M1	[A]	**2**	GUIDEWAY	RAMBARDE ROTAIA	FUEHRUNGSSCHIENE RIEL DE GUIA
13	1440396X1	∅ 5 X 12	**2**	PIN	GOUPILLE COPPIGLIA	STIFT PASADOR
14	3902367M1	∅ 5-18 X 1	**2**	WASHER	RONDELLE RONDELLA	SCHEIBE ARANDELA
15	4274622M1	∅ 8-20 X 3	**4**	WASHER	RONDELLE RONDELLA	SCHEIBE ARANDELA

[A] CAB WITH FLAT BOTTOM
CABINE AVEC FOND PLAT
KABINEN MIT PLATT BODEN
CABINA CON INFERIORE PIANE
CABINA CON FONDO PLANE

Rear Window Mechanism
Mecanisme De Glace Arriere
Heckfenster Ausstellvor
Comando Portello Posteriore
Mecanismo De Ventana Trasera

110-55

1-WU84-001-B

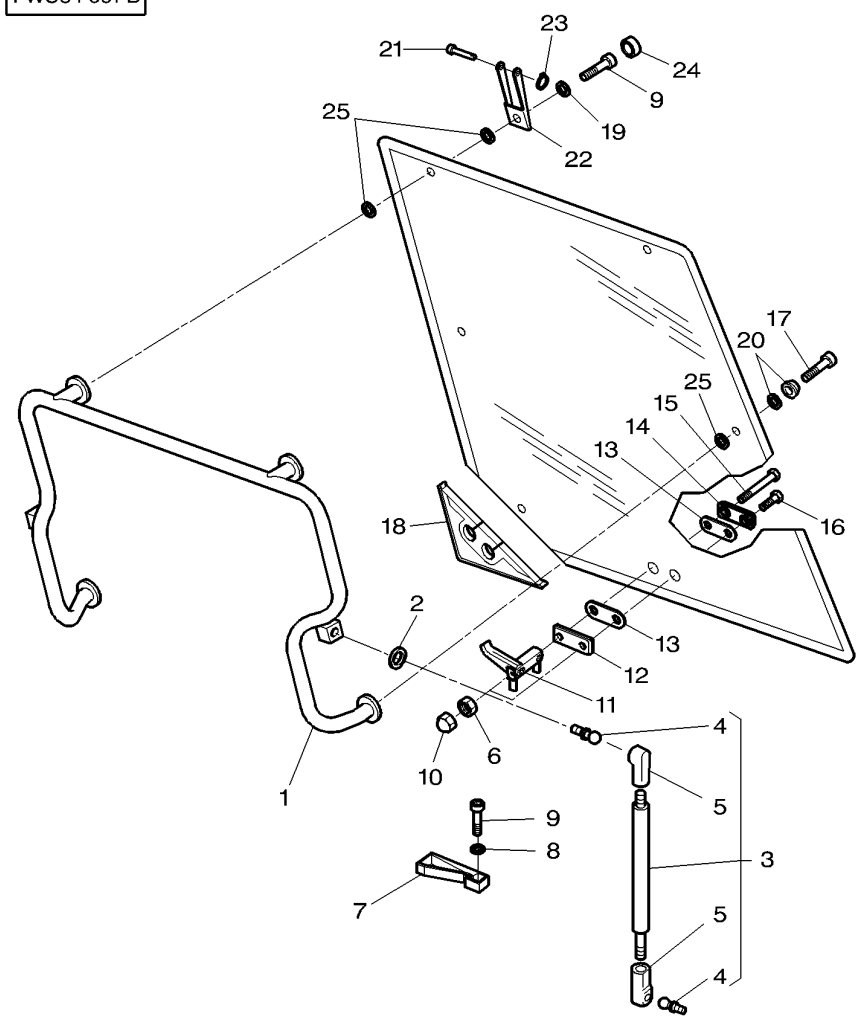

1	3902135M92		**1**	SUPPORT	SUPPORT SOPPORTO	TRAGER SOPORTE
2	391025X1		**4**	TOOTH WASHER	RONDELLE DENTEE ROSETTA DENTATA	ZAHNSCHEIBE ARANDELA ESTRELL
3	3902140M1		**2**	RAM	VERIN CILINDRO IDRAUL.	HYDR.ZYLINDER ARIETE
4		3 REF. 3	**2**	TOGGLE	ROTULE ROTULA	GELENKZAPFEN ROTULA
5		3 REF. 3	**2**	TOGGLE	ROTULE ROTULA	GELENKZAPFEN ROTULA
6	1440329X1	M10	**2**	LOCKNUT	ECROU FREIN AUTOBLOCCANTE	SICHERUNGSMUTTER CONTRATUERCA
7	3619610M1		**1**	THRUSTER	ARRETOIR SPINGITORE	DRUCKRING PROPULSOR
8	391289X1		**2**	SPRING WASHER	RONDELLE ELASTIQ RONDELLA ELASTI.	FEDERSCHEIBE ARANDELA ELASTI.
9	3010775X1	M6 X 25	**4**	SCREW	VIS VITE	SCHRAUBE TORNILLO
10	3619609M1	M10	**2**	HELMET	CAPUCHON CASCO	SCHUTZHELM CASCO
11	3619605M1		**1**	GRIP	POIGNEE MANIGLIA	HANDGRIFF MANGO
12	3619604M1		**1**	PLATE	PLAQUE PIASTRA	PLATTE PLATO
13	3619906M1		**2**	GASKET	JOINT GIUNTO PIANO	FLACHDICHTUNG JUNTA PLANA
14	3619603M1		**1**	PLATE	PLAQUE PIASTRA	PLATTE PLATO
15	3619907M1	M10 X 130	**1**	SCREW	VIS VITE	SCHRAUBE TORNILLO
16	3619908M1	M10 X 35	**1**	SCREW	VIS VITE	SCHRAUBE TORNILLO
17	3009432X1	M6 X 25	**2**	SCREW	VIS VITE	SCHRAUBE TORNILLO
18	3806376M1		**1**	SEAL	JOINT ETANCHEITE GIUNTO ROTONDO	DICHTRING JUNTA REDONDA
19	385361X1		**2**	WASHER	RONDELLE RONDELLA	SCHEIBE ARANDELA
20	3902145M1		**2**	SKATE	PATIN PATTINO	SCHLITTEN-KUFE PATIN
21	3902137M1		**2**	CLEVIS PIN	AXE PERNO D'ATTACCO	SPLINTBOLZEN BULON CILINDRICO
22	3902136M2		**2**	CLEVIS	CHAPE GANCIO D'ATTACCO	GABELSTUECK GANCHO SEGURI.
23	1440988X1		**2**	SNAPRING	SEGMENT ARRET ANELLO SIEGER	SPRENGRING ANILLA RETENCION
24	3902129M1		**2**	MUFF	CACHE MANICOTTO DEVIAN	FLANSCHMUFFE MANGUITO ACOPLAM
25	3902365M1	∅ 8-30 X 3	**6**	WASHER	RONDELLE RONDELLA	SCHEIBE ARANDELA

Roof
Toit
Dach
Tetto
Tejado

110-60

1-WU02-002-A

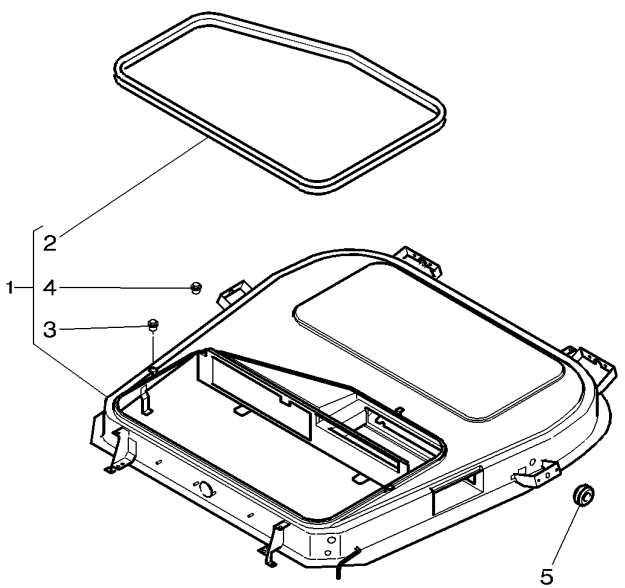

1	5017930P91		[A]
2	3786637M1	1	
3	3580774M1	1	M6
4	3713803M1	1	M4
5	3714694M1		

[A] WITHOUT ROOF HATCH
SANS TRAPPE DE TOIT
OHNE DACHLUKE
SENZA TRAPOLA
SIN PURGADOR

1	ROOF	TOIT TETTO	DACH TECHO
1	GASKET	JOINT GIUNTO PIANO	FLACHDICHTUNG JUNTA PLANA
2	NUT	ECROU DADO	MUTTER TUERCA
4	NUT	ECROU DADO	MUTTER TUERCA
2	GROMMET	PASSE FIL ANELLO PASSACAVO	GUMMITUELLE PASACABLE

Tractor Cab Cabine Tracteur Schlepper-Cabine Cabina Cabina De Tractor	Cladding Habillage Verkleidung Leggera Revestimiento	110-65	

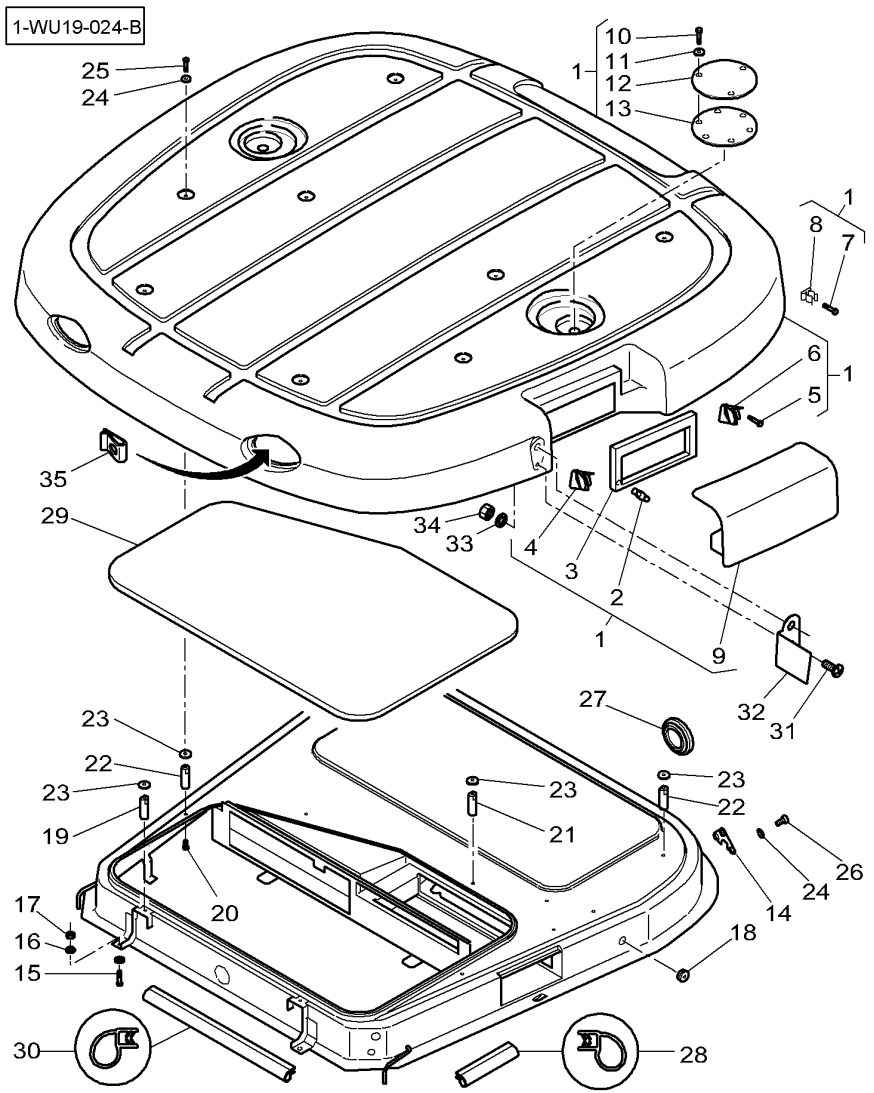

1*	4274638M92			**1**	VISOR	VISIERE PARASOLE	SONNENBLENDE VISERA
1*	4274616M92		(US)	**1**	VISOR	VISIERE PARASOLE	SONNENBLENDE VISERA
2	4274618M1	1		**2**	CLEVIS PIN	AXE PERNO D'ATTACCO	SPLINTBOLZEN BULON CILINDRICO
3	4274635M1	1		**1**	GASKET	JOINT GIUNTO PIANO	FLACHDICHTUNG JUNTA PLANA
4	4274636M91	1	◀	**1**	HINGE	CHARNIERE SNODO	SCHARNIER CHARNELA
5	338317X1	1	▶	**12**	RIVET	RIVET RIVETTO	NIET REMACHE
6	4274637M91	1		**1**	HINGE	CHARNIERE SNODO	SCHARNIER CHARNELA
7	4274659M1	1		**1**	CLIP	PATTE D'ATTACHE FERMAGLIO	SCHELLE CLIP
8	365909X1	1		**1**	SELF TAP SCREWS	VIS AUTO TARAUD KITAUTOBLOCCANTE	SCHNEIDSCHRAUBEN TORNILLO CHAPA
9	4274627M91	1		**1**	TRAP	TRAPPE TRAPPOLA	FANGKLAPPE PURGADOR
10	3009193X1	1		**6**	PLOUGH BOLT	VIS A EMBASE VITE TESTA TONDA	SENKSCHLOSSSCHRB TORNILLO ALOJ C
11	4274622M1	1		**6**	WASHER	RONDELLE RONDELLA	SCHEIBE ARANDELA
12	4274633M91	1		**2**	COVER	COUVERCLE COPERCHIO	ABDECKUNG. CUBIERTA
13	4274634M1	1		**2**	SEAL	JOINT ETANCHEITE GIUNTO ROTONDO	DICHTRING JUNTA REDONDA
14	4275163M1			**1**	PLATE	PLAQUE PIASTRA	PLATTE PLATO
15	339761X1	M8 X 25		**4**	HEX. SOCK. SCREW	VIS TETE HEX VITE PARKER	ZYLINDERSCHRAUBE TORN.CAB.HUECA
16	3010597X1	∅ 8-22		**8**	TOOTH WASHER	RONDELLE DENTEE ROSETTA DENTATA	ZAHNSCHEIBE ARANDELA ESTRELL
17	339169X1	M8		**4**	NUT	ECROU DADO	MUTTER TUERCA
18	3821964M1	∅ 15-20 MM		**1**	PLUG	BOUCHON TAPPO	STOPFEN TAPON
19	5017936M1	◀▶ 45 MM		**2**	SPACER	ENTRETOISE DISTANZIALE	ABSTANDSTUECK DISCO ESPACIADOR
20	3010181X1	M8 X 16		**8**	HEX. SOCK. SCREW	VIS TETE HEX VITE PARKER	ZYLINDERSCHRAUBE TORN.CAB.HUECA
21	5017938M1	◀▶ 76 MM		**2**	SPACER	ENTRETOISE DISTANZIALE	ABSTANDSTUECK DISCO ESPACIADOR
22	5017937M1	◀▶ 62 MM		**4**	SPACER	ENTRETOISE DISTANZIALE	ABSTANDSTUECK DISCO ESPACIADOR
23	3902365M1	∅ 8-30		**8**	WASHER	RONDELLE RONDELLA	SCHEIBE ARANDELA
24	391039X1	∅ 8-24 X 2		**14**	FLAT WASHER	RONDELLE PLATE RONDELLE PIANA	UNTERLEGSCHEIBEN ARANDELA PLANA
25	339761X1	M8 X 25		**8**	HEX. SOCK. SCREW	VIS TETE HEX VITE PARKER	ZYLINDERSCHRAUBE TORN.CAB.HUECA

Tractor Cab Cabine Tracteur Schlepper-Cabine Cabina Cabina De Tractor	Cladding Habillage Verkleidung Leggera Revestimiento	**110-65**	

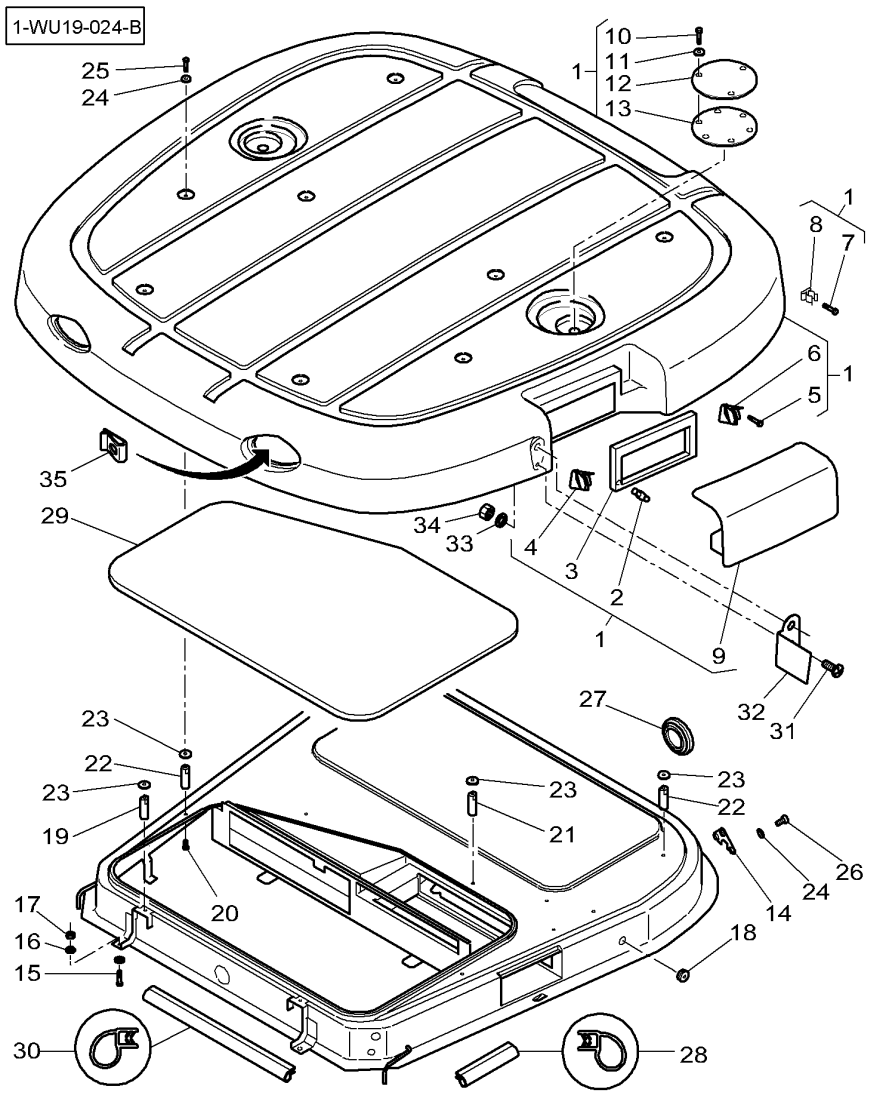

26	339761X1	M8 X 25	**6**	HEX. SOCK. SCREW	VIS TETE HEX VITE PARKER	ZYLINDERSCHRAUBE TORN.CAB.HUECA
27	3778376M2		**1**	TAP	OBTURATEUR. TAPPO*	HAHN GRIFO
27	4280688M1	[A]	**1**	GROMMET	PASSE FIL ANELLO PASSACAVO	GUMMITUELLE PASACABLE
28	4271567M1	◄► 195 MM	**2**	GASKET	JOINT GIUNTO PIANO	FLACHDICHTUNG JUNTA PLANA
29	4282943M2		**1**	SOUND REDUCTION	INSONORISATION INSONORIZZANTE	SCHALLDAEMMUNG REDUCTOR SONIDO
30	4284059M1	◄► 634 MM	**1**	GASKET	JOINT GIUNTO PIANO	FLACHDICHTUNG JUNTA PLANA
31*	3010506X1	M5 X 16	**1**	SCREW	VIS VITE	SCHRAUBE TORNILLO
32*	4287201M1		**1**	SUPPORT	SUPPORT SOPPORTO	TRAGER SOPORTE
33*	1427000M1		**1**	WASHER	RONDELLE RONDELLA	SCHEIBE ARANDELA
34*	1441917X1	M5	**1**	LOCKNUT	ECROU FREIN AUTOBLOCCANTE	SICHERUNGSMUTTER CONTRATUERCA
35*	3817218M1		**4**	SPRING NUT	ECROU RESSORT SPRING NUT	FEDERMUTTER TUERCA RESORTE

[A] REAR WINDSCREEN WIPER
ESSUIE GLACES ARRIERE
HINTER SCHEIBENWISCHER
TERGICRISTALLO POSTERIORE
LIMPIA PARABRISAS TRASERA

Tractor Cab Cabine Tracteur Schlepper-Cabine Cabina Cabina De Tractor	Cladding Habillage Verkleidung Leggera Revestimiento	110-70	

1-WU19-026-B

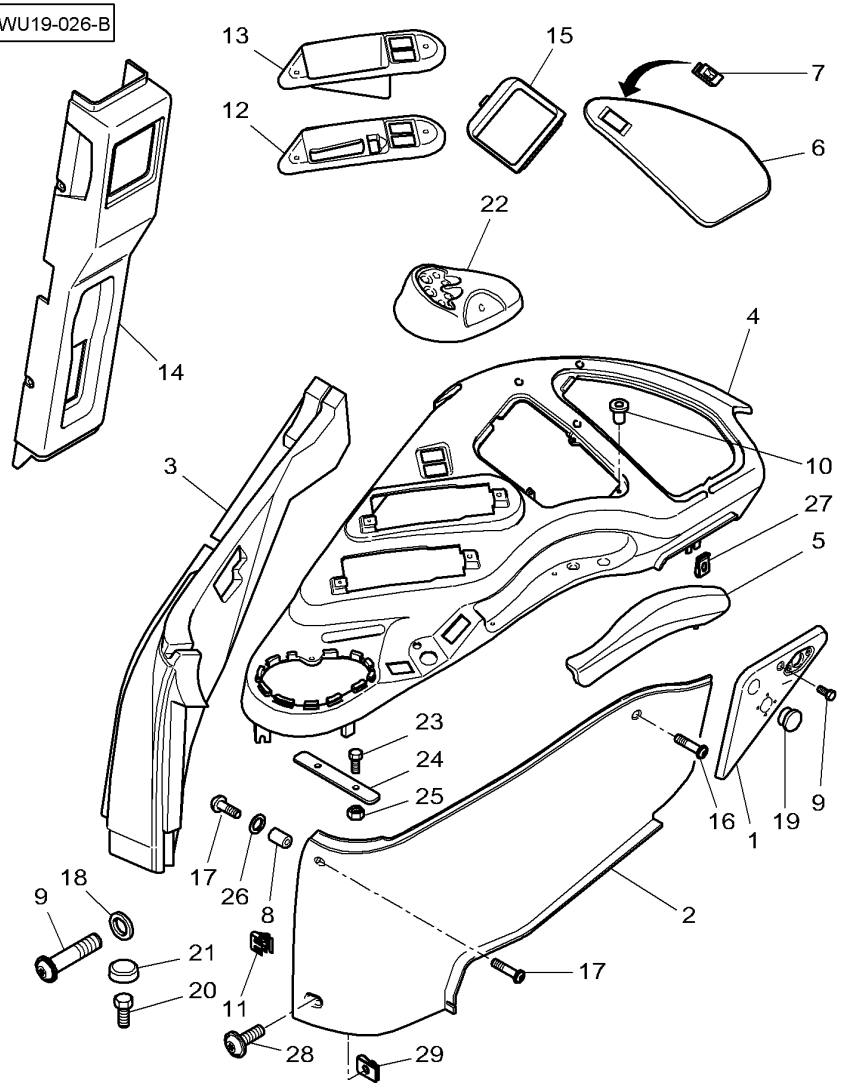

1	4279102M91		**1**	TRIANGLE	TRIANGLE TRIANGOLO	DREIECK TRIANGULO
2	4279099M92	➡	R184058	**1**	PANEL	PANNEAU PANNELLO	WANDPLATTE PANEL
2*	4279099M93	➡ R184059	**1**	PANEL	PANNEAU PANNELLO	WANDPLATTE PANEL
3	4279304M91	[A]	**1**	CLADDING	HABILLAGE CABINE RIVESTIMENTO CAB	VERKLEIDUNG CHAQUETA
4	4270894M92		**1**	PLATE CLAMPING	PLATINE PIASTRA APPOGGIO	KLEMMPLATTE PLACA DE ABRAZO
5	3789486M1		**1**	ARMREST	ACCOUDOIR BRACCIOLO	ARMLEHNE APOYABRAZOS
6	4270896M91		**1**	COVER	COUVERCLE COPERCHIO	ABDECKUNG. CUBIERTA
7	4270986M1		**1**	HASP	LOQUET LUCCHETTO	DREHRIEGEL ALDABA
8	4280614M1	∅ 13 X 14 - M5	**1**	SPACER	ENTRETOISE DISTANZIALE	ABSTANDSTUECK DISCO ESPACIADOR
9	3010578X1	M5 X 10	**X**	SCREW	VIS VITE	SCHRAUBE TORNILLO
9	3010506X1	M5 X 16	**X**	SCREW	VIS VITE	SCHRAUBE TORNILLO
9	3011434X1	M5 X 30	**X**	SCREW	VIS VITE	SCHRAUBE TORNILLO
10	4277656M1	M4	**3**	INSERT	DOUILLE INSERTO	EINSATZSTUECK INSERCION
11	4275137M1	➡	P139062	**1**	CLIP	PATTE D'ATTACHE FERMAGLIO	SCHELLE CLIP
12	4270711M1		**1**	COVER	COUVERCLE COPERCHIO	ABDECKUNG. CUBIERTA
13	4270709M1		**1**	COVER	COUVERCLE COPERCHIO	ABDECKUNG. CUBIERTA
14	4276955M92	▶	**1**	MOUNTING	MONTANT SUPPORTO MONTAGG	HALTERUNG MONTANTE
15	4270710M1		**1**	GRILLE	GRILLE GRIGLIA.	GRILL REJILLA
16	3010506X1	M5 X 16	**1**	SCREW	VIS VITE	SCHRAUBE TORNILLO
17	3010578X1	M5 X 10	**2**	SCREW	VIS VITE	SCHRAUBE TORNILLO
18	1427000M1	∅ 5,2-16 X 4	**X**	WASHER	RONDELLE RONDELLA	SCHEIBE ARANDELA
19	4275985M1	[C] ∅ 32 MM	**3**	TAP	OBTURATEUR. TAPPO*	HAHN GRIFO
20	3009491X1	M10 X 20	**3**	HEX. SOCK. SCREW	VIS TETE HEX VITE PARKER	ZYLINDERSCHRAUBE TORN.CAB.HUECA
21	3824109M1		**3**	CAP	CHAPEAU CAPUCHON	KAPPE TAPA
22	4270886M91		**1**	CONSOLE	CONSOLE CONSOLE	KONSOLE CONSOLA
23	1440922X1	M6 X 60	**2**	HEX. SOCK. SCREW	VIS TETE HEX VITE PARKER	ZYLINDERSCHRAUBE TORN.CAB.HUECA

Tractor Cab Cabine Tracteur Schlepper-Cabine Cabina Cabina De Tractor	Cladding Habillage Verkleidung Leggera Revestimiento	110-70	

1-WU19-026-B

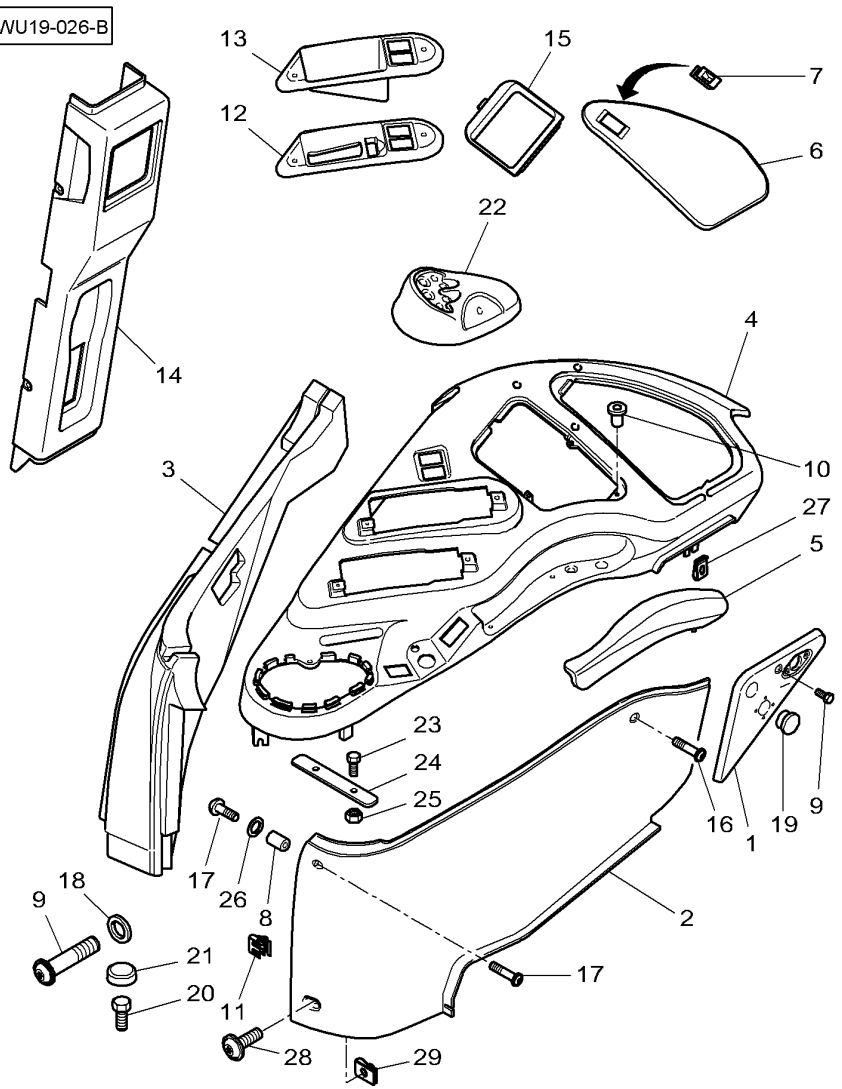

24	4273192M3		**1**	PLATE	PLAQUE PIASTRA	PLATTE PLATO
25	3019123X1	M6	**2**	NUT	ECROU DADO	MUTTER TUERCA
26	3019560X1	∅ 5-15 X 1,5 MM	**1**	WASHER	RONDELLE RONDELLA	SCHEIBE ARANDELA
27	3715143M1		**1**	SPRING NUT	ECROU RESSORT SPRING NUT	FEDERMUTTER TUERCA RESORTE
28*	3010578X1	➡ R184059 M5 X 10	**1**	SCREW	VIS VITE	SCHRAUBE TORNILLO
29*	3715142M1	➡ R184059 M5	**1**	SPRING NUT	ECROU RESSORT SPRING NUT	FEDERMUTTER TUERCA RESORTE

[A] WITH DATATRONIC
AVEC DATATRONIC
MIT DATATRONIC
CON DATATRONIC
CON DATATRONIC

[C] WITHOUT ELECTRICAL PLUG
SANS PRISE DE COURANT
OHNE STECK
SIN PRESA DI CORRENTE
SENZA ENCHUFE

Tractor Cab Cabine Tracteur Schlepper-Cabine Cabina Cabina De Tractor	Cladding Habillage Verkleidung Leggera Revestimiento	110-75	Dressing Roof Habillage Toit Dressieren Dach Dressing Tetto Preparacion Techo

1-WU19-016-A

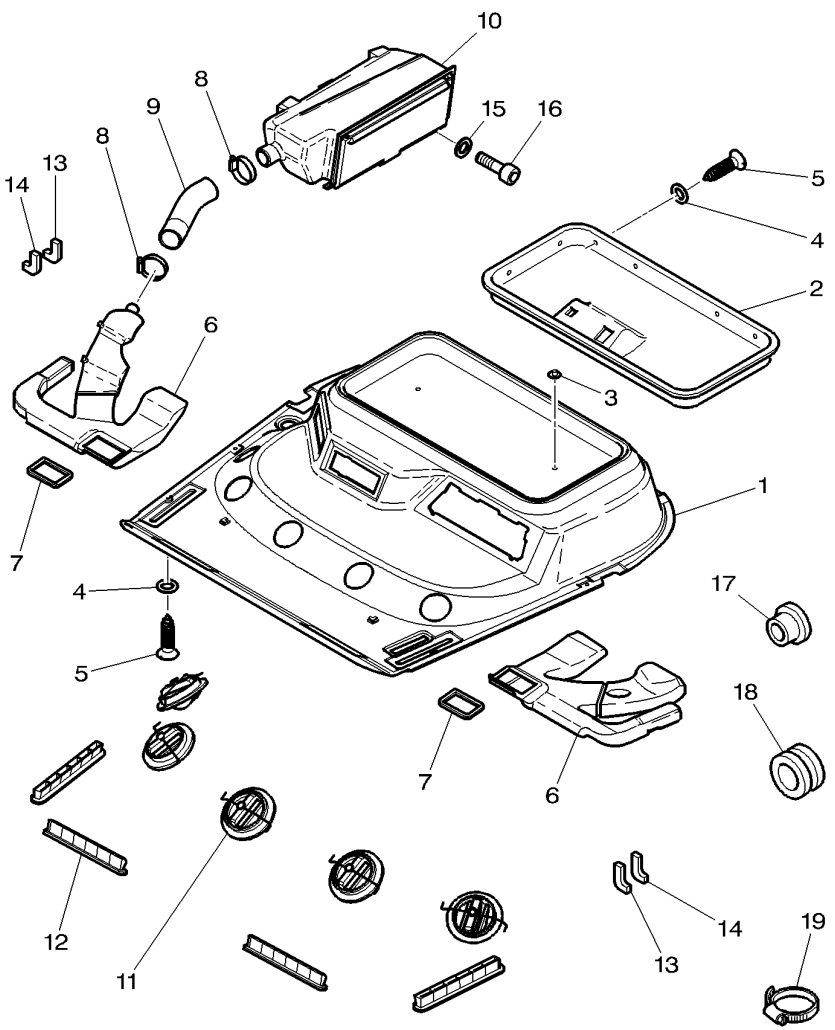

1	4273536M92	[A]	**1**	CLADDING	HABILLAGE CABINE RIVESTIMENTO CAB	VERKLEIDUNG CHAQUETA
2*				NOT USED	NON UTILISE INUSATO	NICHT VERWENDET NO SE USA
3	4271027M1	[A] M8	**2**	NUT	ECROU DADO	MUTTER TUERCA
4	1427000M1	∅ 5,2-16 X 4 MM	**X**	WASHER	RONDELLE RONDELLA	SCHEIBE ARANDELA
5	3010506X1	M5 X 16	**X**	SCREW	VIS VITE	SCHRAUBE TORNILLO
5*	3823089M1	CBZ No 10X19	**6**	SCREW	VIS VITE	SCHRAUBE TORNILLO
6	3786684M1	◀	**1**	PIPE	TUYAU TUBO	TUBE TUBO
6	3786672M1	▶	**1**	PIPE	TUYAU TUBO	TUBE TUBO
7	3615352M1		**2**	GASKET	JOINT GIUNTO PIANO	FLACHDICHTUNG JUNTA PLANA
8	338617X1	∅ 40-60	**2**	HOSE CLIP	COLLIER DURITE COLLARE DI TUBO	SCHLAUCHBINDER ABRAZADERA TUBO
9	4271111M1		**1**	SHEATH	GAINE GUAINA	HUELLE FUNDA
10	4273542M91		**1**	HOLDER	PIECE SUPPORT SUPPORTO DI BASE	HALTER SUJETADOR
11	3786678M1		**5**	VENT	EVENT SFIATO	VENTILATION TOMA DE AIRE
12	4273677M3		**4**	VENTILATOR	AERATEUR VENTOLA	VENTILATOR RULO DE SACO
13	4271133M1	▶	**2**	GASKET	JOINT GIUNTO PIANO	FLACHDICHTUNG JUNTA PLANA
14	4271112M1	◀	**2**	GASKET	JOINT GIUNTO PIANO	FLACHDICHTUNG JUNTA PLANA
15	391038X1	∅ 6-18 X 1,5	**3**	FLAT WASHER	RONDELLE PLATE RONDELLE PIANA	UNTERLEGSCHEIBEN ARANDELA PLANA
16	1440350X1	M6 X 20	**3**	SCREW METRIC	VIS METRIQUE VITE METRICA	SCHRAUBE METR TORNILLO METRICO
17	3580599M1	∅ 22 MM	**1**	PLUG	BOUCHON TAPPO	STOPFEN TAPON
18	3783677M1	∅ 7-17-21	**1**	GROMMET	PASSE FIL ANELLO PASSACAVO	GUMMITUELLE PASACABLE
19	3619622M1		**2**	CABLE TIE	ATTACHE CABLE FASCETTA CAVI	KABELBINDER APRIETACABLES

[A] WITHOUT ROOF HATCH
SANS TRAPPE DE TOIT
OHNE DACHLUKE
SENZA TRAPOLA
SIN PURGADOR

Tractor Cab Cabine Tracteur Schlepper-Cabine Cabina Cabina De Tractor	Cladding Habillage Verkleidung Leggera Revestimiento	110-80	

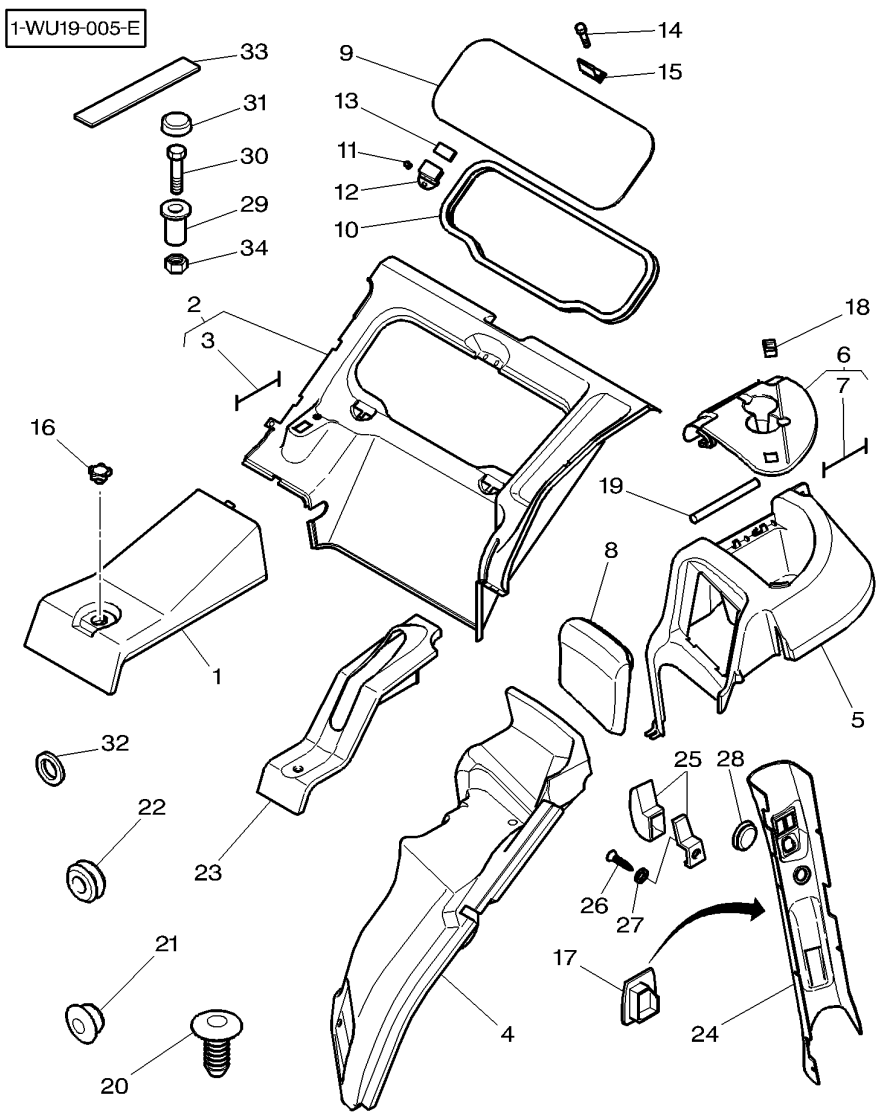

1	* 4279114M91		1	COVER	COUVERCLE COPERCHIO	ABDECKUNG. CUBIERTA
2	* 4279117M91		1	REAR WINDOW	LUNETTE FINESTRINO POST.	HECKSCHEIBE VENTANA TRASERA
3	4270988M1	2 ◄► 110 mm	1	TIE	ATTACHE TRAVERSA ATTACCO	ANBINDUNG BARRA DE ENLACE
4	* 4279123M91		1	ENVELOPE	ENVELOPPE BUSTA	BEUTEL SOBRE
5	* 4279120M91		1	LOCKER	CAISSON CASSETTO	FACH CAJON
6	* 4270900M93		1	COVER	COUVERCLE COPERCHIO	ABDECKUNG. CUBIERTA
7	4270987M1	6 ◄► 450 mm	1	TIE	ATTACHE TRAVERSA ATTACCO	ANBINDUNG BARRA DE ENLACE
8	* 4279129M91		1	BACK REST	DOSSIER SCHIENALE	RUECKENLEHNE RESPALDO
9	3714482M1	578,5 X 212 X 5	1	WINDOW	GLACE FINESTRINO	FENSTER VENTANA
10	3786411M1	◄► 1385 mm	1	GASKET	JOINT GIUNTO PIANO	FLACHDICHTUNG JUNTA PLANA
11	3902455M1	M6	2	CAP NUT	ECROU BORGNE DADO A CAPPELLO	HUTMUTTER TUERCA DE TAPA
12	3784336M1		2	HINGE	CHARNIERE SNODO	SCHARNIER CHARNELA
13	3784894M1	◄► 50 mm	2	GASKET	JOINT GIUNTO PIANO	FLACHDICHTUNG JUNTA PLANA
14	3010506X1	M5 X 16	2	SCREW	VIS VITE	SCHRAUBE TORNILLO
15	3784337M1		1	LATCH	VERROU DENTE DI ARRESTO	KLINKE TOPE
16	4270514M1		1	BUTTON	BOUTON BOTTONE	KNOPFTASTE BOTON
17	4271912M1	[A]	1	MUFF	CACHE MANICOTTO DEVIAN	FLANSCHMUFFE MANGUITO ACOPLAM
18	4270986M1		1	HASP	LOQUET LUCCHETTO	DREHRIEGEL ALDABA
19	4270984M1		1	CLEVIS PIN	AXE PERNO D'ATTACCO	SPLINTBOLZEN BULON CILINDRICO
20	* 4275041M2	∅ 10 mm	X	BUTTON	BOUTON BOTTONE	KNOPFTASTE BOTON
21	* 3713587M1	∅ 22 mm ➡ S018027	1	PLUG	BOUCHON TAPPO	STOPFEN TAPON
21	* 3041932M1	[B] ∅ 13 - 19 mm	1	PLUG	BOUCHON TAPPO	STOPFEN TAPON
22	1803494M1	∅ 15-10-3	1	GROMMET	PASSE FIL ANELLO PASSACAVO	GUMMITUELLE PASACABLE
23	* 4279871M91	(US)	1	MUFF	CACHE MANICOTTO DEVIAN	FLANSCHMUFFE MANGUITO ACOPLAM
23	* 4279126M91		1	MUFF	CACHE MANICOTTO DEVIAN	FLANSCHMUFFE MANGUITO ACOPLAM
24	* 4270898M91		1	MOUNTING	MONTANT SUPPORTO MONTAGG	HALTERUNG MONTANTE

Tractor Cab Cabine Tracteur Schlepper-Cabine Cabina Cabina De Tractor	Cladding Habillage Verkleidung Leggera Revestimiento	**110-80**	

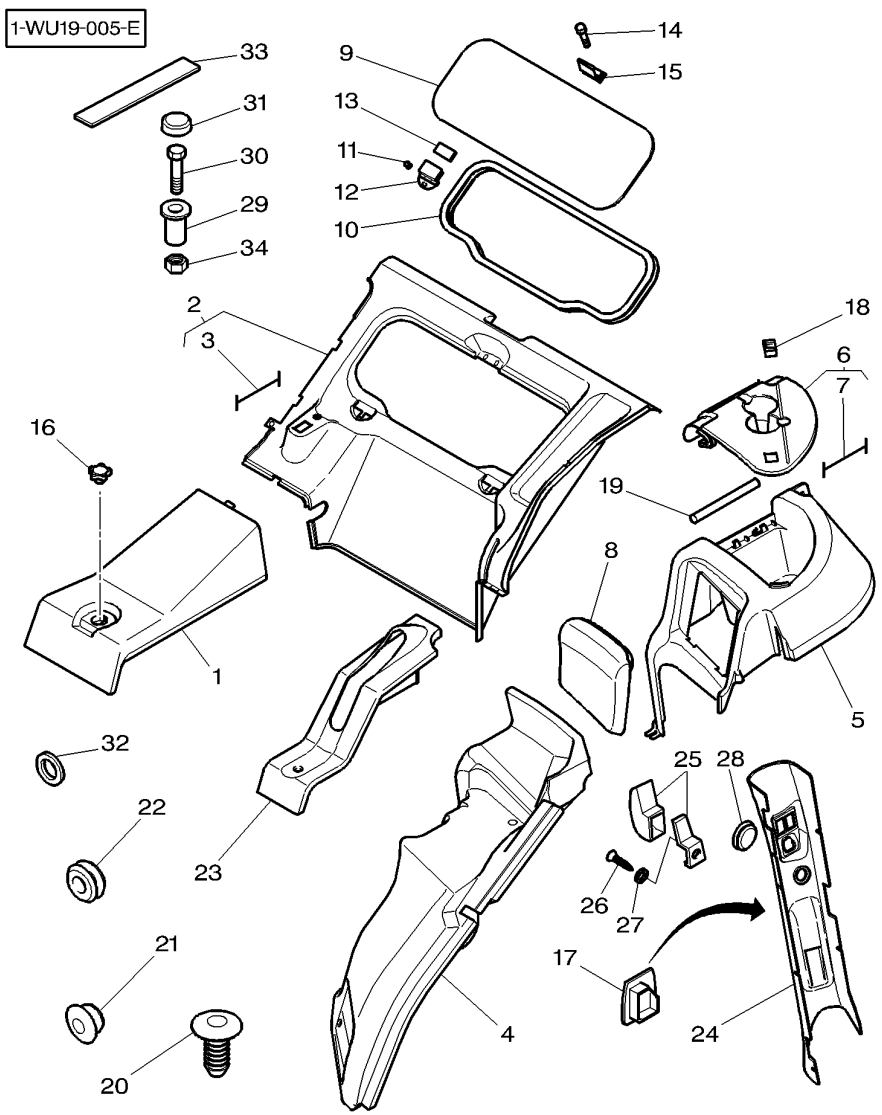

25	3810912M91		**1**	HOOK	CROCHET GANCIO	HAKEN GANCHO
26	3010578X1	M5 X 10	**1**	SCREW	VIS VITE	SCHRAUBE TORNILLO
27	390469X1	∅ 5-10 X 1,5	**1**	FLAT WASHER	RONDELLE PLATE RONDELLE PIANA	UNTERLEGSCHEIBEN ARANDELA PLANA
28	4275985M1	∅ 32 mm	**1**	TAP	OBTURATEUR. TAPPO*	HAHN GRIFO
29*	3715991M1	∅ 8,5-11,4	**1**	SPACER	ENTRETOISE DISTANZIALE	ABSTANDSTUECK DISCO ESPACIADOR
30	339337X1	M8 X 30	**1**	HEX. SOCK. SCREW	VIS TETE HEX VITE PARKER	ZYLINDERSCHRAUBE TORN.CAB.HUECA
30	339009X1	M8 X 35	**2**	HEX. SOCK. SCREW	VIS TETE HEX VITE PARKER	ZYLINDERSCHRAUBE TORN.CAB.HUECA
31	3616277M1		**3**	HELMET	CAPUCHON CASCO	SCHUTZHELM CASCO
32	1427000M1	∅ 5,2-16 X 4	**9**	WASHER	RONDELLE RONDELLA	SCHEIBE ARANDELA
33	3778749M1	25 X 15 X 80	**2**	FOAM	MOUSSE GOMMAPIUMA	SCHAUMSTOFF ESPUMA
34	339169X1	M8	**2**	NUT	ECROU DADO	MUTTER TUERCA

[A] WITH OUT ELECTRIC CONTROL REAR REFLECTING MIROR
SANS RETROVISEUR A COMMANDE ELECTRIQUE
OHNE RUCKSPIEGEL MIT ELEKTRISCHE SCHALTUNG
SENZA RETROVISORE A COMANDO ELETTRICO
SIN RETROVISOR CON MANDO ELECTRICO

[B] WITHOUT AUTOMATIC HITCH
SANS CROCHET AUTOMATIQUE
OHNE AUTOMATISCHE ANHAENGEKUPPLUNG
SENZA GANCIO AUTOMATICO
SIN ENGANCHE AUTOMATICO

Instrument Panel Cladding
Habillage Tableau De Bord
Einfassung Instrumentenbrett
Vestire Cruscotto
Vestir Tablero De Instrumentos

110-85

1-WU20-006-B

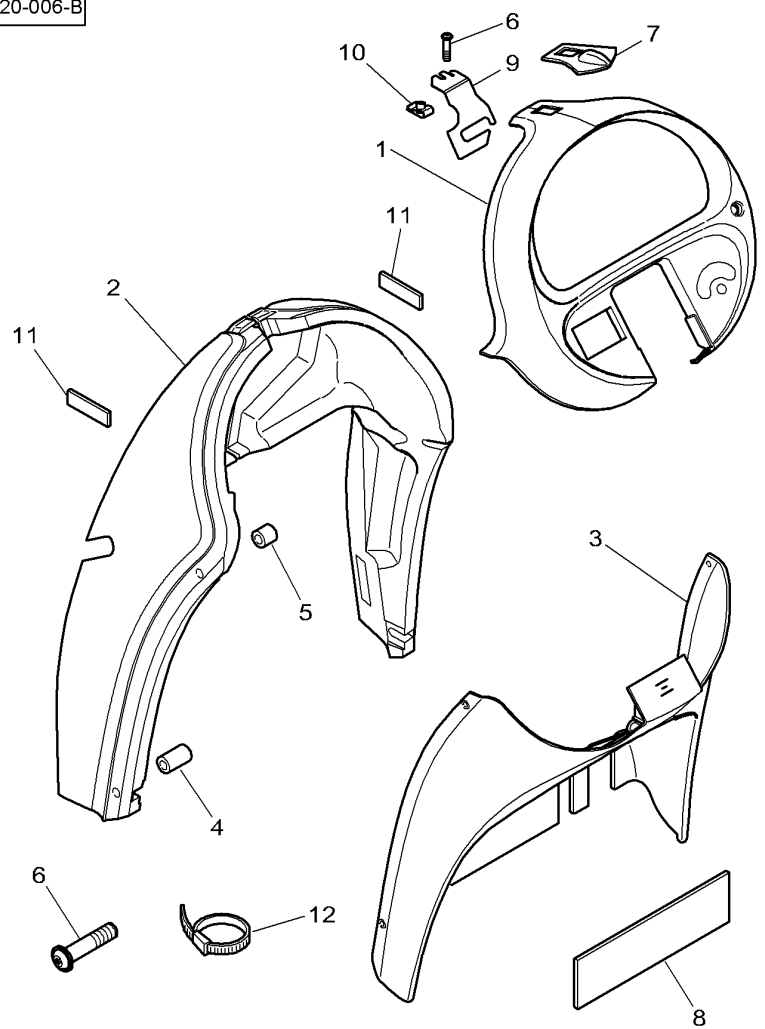

1	4270902M93		**1**	PLATE CLAMPING	PLATINE PIASTRA APPOGGIO	KLEMMPLATTE PLACA DE ABRAZO
2	4279108M92		**1**	ENVELOPE	ENVELOPPE BUSTA	BEUTEL SOBRE
3*	4279105M92		**1**	PANEL	PANNEAU PANNELLO	WANDPLATTE PANEL
4	4272688M1	∅ 15-M5 X 25	**2**	SPACER	ENTRETOISE DISTANZIALE	ABSTANDSTUECK DISCO ESPACIADOR
5	4272687M2	∅ 15-M5 X 11	**2**	SPACER	ENTRETOISE DISTANZIALE	ABSTANDSTUECK DISCO ESPACIADOR
6	3010578X1	M5 X 10	**X**	SCREW	VIS VITE	SCHRAUBE TORNILLO
6	3010506X1	M5 X 16	**X**	SCREW	VIS VITE	SCHRAUBE TORNILLO
6	3011434X1	M5 X 30	**X**	SCREW	VIS VITE	SCHRAUBE TORNILLO
7	4276813M1	[B]	**1**	FLANGE	FLASQUE FLANGIA	FLANSCH PLETINA
7	4276867M1	[C]	**1**	FLANGE	FLASQUE FLANGIA	FLANSCH PLETINA
8	4271499M1	520 X 150	**1**	TRIM	ENJOLIVEUR FINITURA	ZIERLEISTE TAPIZADO
9*	4276864M3		**1**	SUPPORT	SUPPORT SOPPORTO	TRAGER SOPORTE
10	3715143M1	M5	**X**	SPRING NUT	ECROU RESSORT SPRING NUT	FEDERMUTTER TUERCA RESORTE
11	3814980M1		**4**	PAD	TAMPON TAMPONE	KLOTZ ALMOHADILLA
12	3619622M1		**X**	CABLE TIE	ATTACHE CABLE FASCETTA CAVI	KABELBINDER APRIETACABLES

[B] AUTOMATIC AIR CONDITIONER
CLIMATISEUR AUTOMATIQUE
AUTOMATISCH KLIMAANLAGE
CONDIZIONATORE DI ARIA AUTOMATICO
ACONDICIONADOR DE AIRE AUTOMATICO

[C] MANUAL AIR CONDITIONER
CLIMATISEUR MANUEL
HAND KLIMAANLAGE
CONDIZIONATORE DI ARIA MANUAL
ACONDICIONADOR DE AIRE MANUALE

Tractor Cab Cabine Tracteur Schlepperkabine Cabina Trattore Cabina Tractor	Cab Insulation Insonorisation Isolierung Isolante Cabina Aislamiento	110-90

1-WU11-005-A

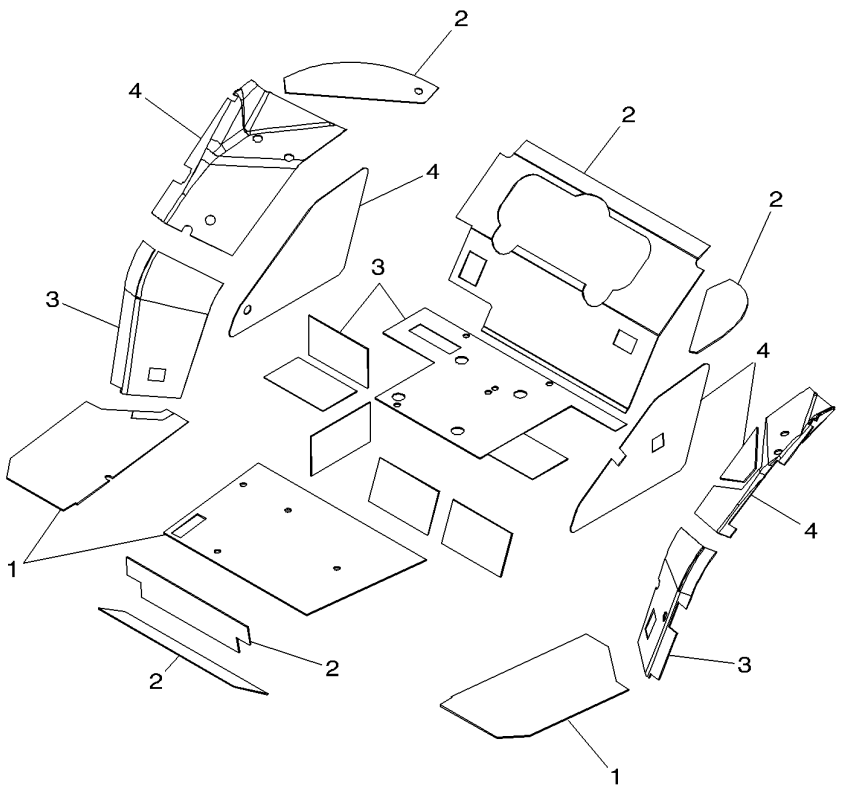

1*	3789928M93	**1**	SOUND REDUCTION	INSONORISATION INSONORIZZANTE	SCHALLDAEMMUNG REDUCTOR SONIDO
2	3789926M96	**1**	SOUND REDUCTION	INSONORISATION INSONORIZZANTE	SCHALLDAEMMUNG REDUCTOR SONIDO
3	3789925M96	**1**	SOUND REDUCTION	INSONORISATION INSONORIZZANTE	SCHALLDAEMMUNG REDUCTOR SONIDO
4	3789927M95	**1**	SOUND REDUCTION	INSONORISATION INSONORIZZANTE	SCHALLDAEMMUNG REDUCTOR SONIDO

Tractor Cab Cabine Tracteur Schlepperkabine Cabina Trattore Cabina Tractor	Cab Insulation Insonorisation Isolierung Isolante Cabina Aislamiento	110-95	

1-WU11-002-E

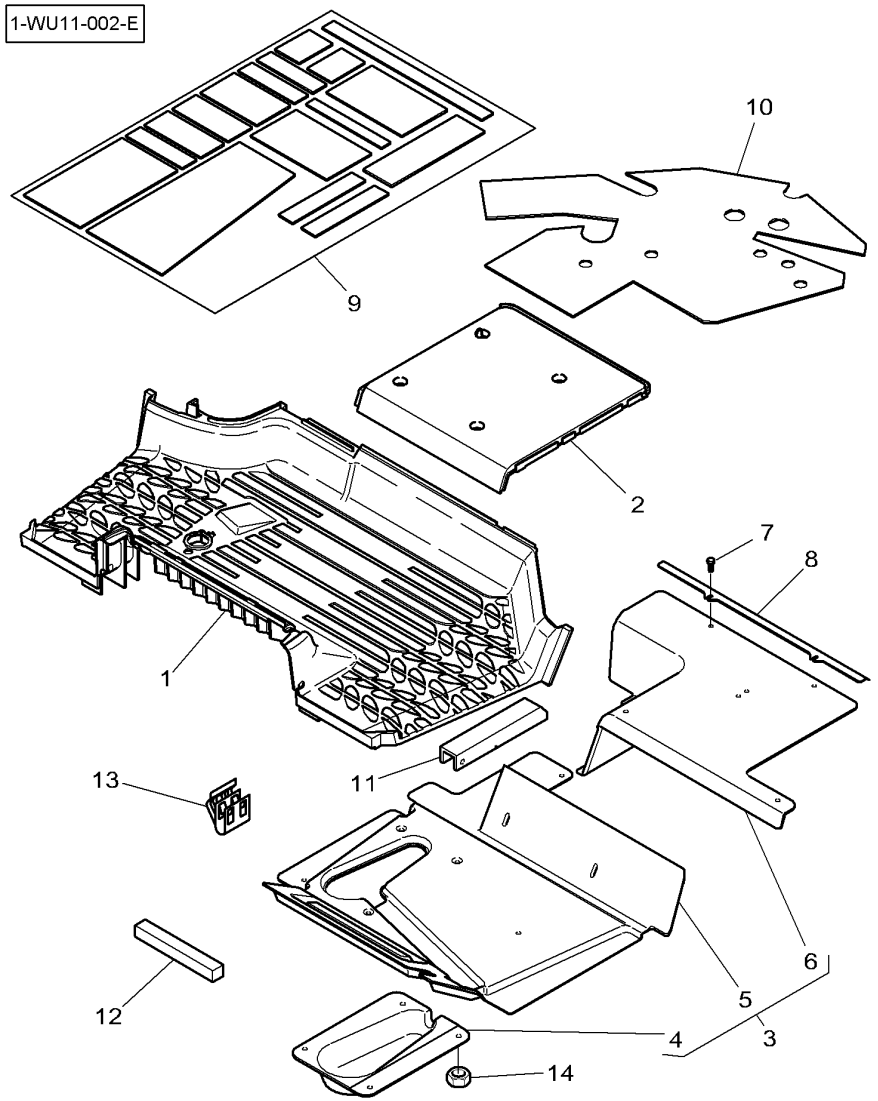

1	*	4270867M92		1	MAT	TAPIS STOINO	MATTE ALFOMBRA
2	*	4270890M91		1	MAT	TAPIS STOINO	MATTE ALFOMBRA
3	*	4271510M94		1	FENCE	PROTECTION RECINTO	GITTER CERCA
4			3 REF. 3	1	FENCE	PROTECTION RECINTO	GITTER CERCA
5			3 REF. 3	1	FENCE	PROTECTION RECINTO	GITTER CERCA
6			3 REF. 3	1	FENCE	PROTECTION RECINTO	GITTER CERCA
7		3010506X1	M5 X 16	X	SCREW	VIS VITE	SCHRAUBE TORNILLO
8		4271488M1		1	STRAP	PATTE CORREGGIA	LASCHE FAJA
9		4271481M92		1	SOUND REDUCTION	INSONORISATION INSONORIZZANTE	SCHALLDAEMMUNG REDUCTOR SONIDO
10		4271512M3	▶	1	FOAM	MOUSSE GOMMAPIUMA	SCHAUMSTOFF ESPUMA
11	*	4277104M1		1	CHOCK	CALE PASSACAVO	UNTERLEG-KEIL CALZA
12		3778749M1	25 X 15 X 80	2	FOAM	MOUSSE GOMMAPIUMA	SCHAUMSTOFF ESPUMA
13		4275137M1	➡| P139062	1	CLIP	PATTE D'ATTACHE FERMAGLIO	SCHELLE CLIP
14		1441500X1	M6	4	TOP LOCKNUT	ECROU AUTOFREINE DADO DI TESTA	SELBSTS.MUTTER CONTRATUERCA SUP

Tractor Cab Cabine Tracteur Schlepperkabine Cabina Trattore Cabina Tractor	Fenders Ailes Kotfluegel Parafango Guardabarros	110-100

1-WU07-002-D

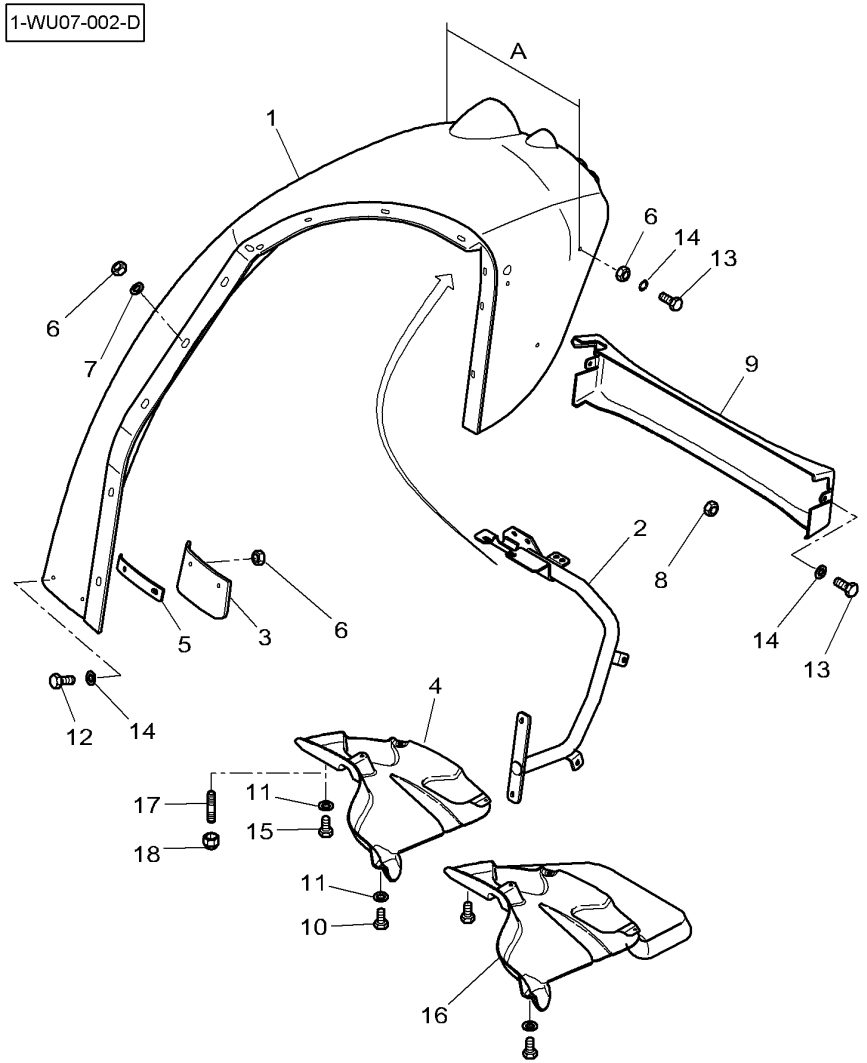

1	3786915P1	[BC] ◀ A = 578 MM	**1**	FENDER	AILE PARAFANGO.	SCHUTZBLECH GUARDABARROS.
1	3786913P1	[BD] ◀ A = 721 MM	**1**	FENDER	AILE PARAFANGO.	SCHUTZBLECH GUARDABARROS.
1	3786919P1	[BE] ◀ A = 843 MM	**1**	FENDER	AILE PARAFANGO.	SCHUTZBLECH GUARDABARROS.
1	3786916P1	[BC] ▶ A = 578 MM	**1**	FENDER	AILE PARAFANGO.	SCHUTZBLECH GUARDABARROS.
1	3786914P1	[BD] ▶ A = 721 MM	**1**	FENDER	AILE PARAFANGO.	SCHUTZBLECH GUARDABARROS.
1	3786920P1	[BE] ▶ A = 843 MM	**1**	FENDER	AILE PARAFANGO.	SCHUTZBLECH GUARDABARROS.
2	3787111M1	[C] ◀	**1**	SUPPORT	SUPPORT SOPPORTO	TRAGER SOPORTE
2	3787113M1	[D] ◀	**1**	SUPPORT	SUPPORT SOPPORTO	TRAGER SOPORTE
2	3787115M1	[E] ◀	**1**	SUPPORT	SUPPORT SOPPORTO	TRAGER SOPORTE
2	3787112M1	[C] ▶	**1**	SUPPORT	SUPPORT SOPPORTO	TRAGER SOPORTE
2	3787114M1	[D] ▶	**1**	SUPPORT	SUPPORT SOPPORTO	TRAGER SOPORTE
2	3787116M1	[E] ▶	**1**	SUPPORT	SUPPORT SOPPORTO	TRAGER SOPORTE
3	3787129M1	[C] ◀	**1**	EXTENSION	RALLONGE PROLUNGA	VERLAENGERUNG ENSANCHE
3	4277275M1	[C] ▶	**1**	EXTENSION	RALLONGE PROLUNGA	VERLAENGERUNG ENSANCHE
3	3787130M1	[DE] ▶	**1**	EXTENSION	RALLONGE PROLUNGA	VERLAENGERUNG ENSANCHE
3	4277274M1	[DE] ◀	**1**	EXTENSION	RALLONGE PROLUNGA	VERLAENGERUNG ENSANCHE
4	3787123M1	[C] ◀	**1**	PROTECTOR	PROTECTEUR PROTETTORE	SCHUTZ PROTECTOR
4	3787125M1	[D] ◀	**1**	PROTECTOR	PROTECTEUR PROTETTORE	SCHUTZ PROTECTOR
4*	3787127M1	[E] ◀	**1**	PROTECTOR	PROTECTEUR PROTETTORE	SCHUTZ PROTECTOR
4	3787124M1	[C] ▶	**1**	PROTECTOR	PROTECTEUR PROTETTORE	SCHUTZ PROTECTOR
4	3787126M1	[D] ▶	**1**	PROTECTOR	PROTECTEUR PROTETTORE	SCHUTZ PROTECTOR
4*	3787128M1	[E] ▶	**1**	PROTECTOR	PROTECTEUR PROTETTORE	SCHUTZ PROTECTOR
5	3787195M1	[C]	**2**	SUPPORT	SUPPORT SOPPORTO	TRAGER SOPORTE
5	3787196M1	[DE]	**2**	SUPPORT	SUPPORT SOPPORTO	TRAGER SOPORTE
6	394367X1	M8	**34**	NUT	ECROU DADO	MUTTER TUERCA

Tractor Cab Cabine Tracteur Schlepperkabine Cabina Trattore Cabina Tractor	Fenders Ailes Kotfluegel Parafango Guardabarros	110-100	

1-WU07-002-D

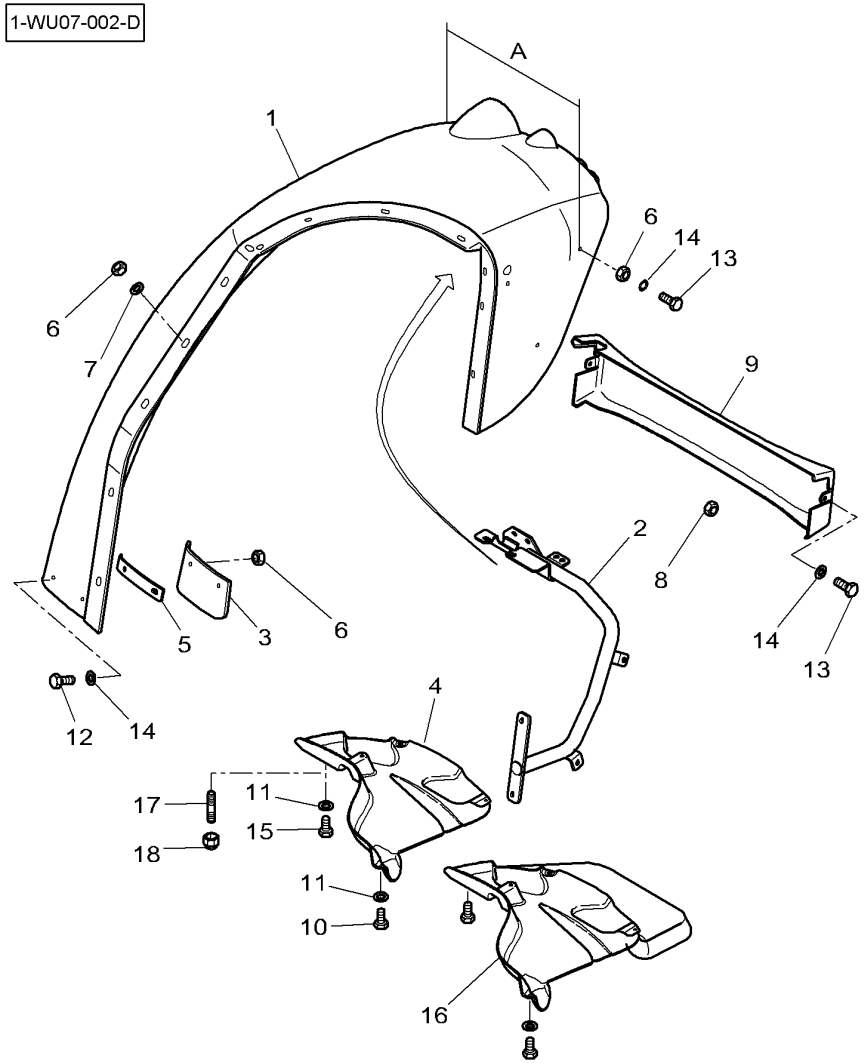

7	391039X1	∅ 8-24 X 2		**24**	FLAT WASHER	RONDELLE PLATE RONDELLE PIANA	UNTERLEGSCHEIBEN ARANDELA PLANA
8	1427024M1	M8		**2**	NUT	ECROU DADO	MUTTER TUERCA
9	4280841P91	[B]		**1**	BAND	BANDE NASTRO	BAND BANDA
10	3009280X1	M6 X 12		**2**	SCREW	VIS VITE	SCHRAUBE TORNILLO
11	391038X1	∅ 6-18 X 1,5		**2**	FLAT WASHER	RONDELLE PLATE RONDELLE PIANA	UNTERLEGSCHEIBEN ARANDELA PLANA
12	3010910X1	M8 X 25		**4**	SCREW	VIS VITE	SCHRAUBE TORNILLO
13*	339761X1	M8 X 25		**4**	HEX. SOCK. SCREW	VIS TETE HEX VITE PARKER	ZYLINDERSCHRAUBE TORN.CAB.HUECA
13*	339009X1	M8 X 35		**2**	HEX. SOCK. SCREW	VIS TETE HEX VITE PARKER	ZYLINDERSCHRAUBE TORN.CAB.HUECA
14	385361X1	∅ 9-17 X 3,2		**14**	WASHER	RONDELLE RONDELLA	SCHEIBE ARANDELA
15					NOT USED	NON UTILISE INUSATO	NICHT VERWENDET NO SE USA
16	4271147M1	[EA] ◀		**1**	EXTENSION	RALLONGE PROLUNGA	VERLAENGERUNG ENSANCHE
16	4271148M1	[EA] ▶		**1**	EXTENSION	RALLONGE PROLUNGA	VERLAENGERUNG ENSANCHE
17	3011669X1	M6 X 16		**8**	STUD	GOUJON SPINOTTO FILETT.	STEHBOLZEN ESPARRAGO ROSCA.
18*	4280935M1			**8**	NUT	ECROU DADO	MUTTER TUERCA

[A] USED WITH EXTENSION FENDERS
UTILISE AVEC EXTENSION D'AILE
VERWENDEN MIT AUSDEHNUNG KOTFLUEGEL
UTILIZZARE CON EXTENSION DI PARAFANGHI
UTILIZAR CON ESTENSIONE DE GUARDABARRO

[B] THE APPROPRIATE SAFETY DECALS MUST BE ORDERED AND FITTED TO THIS PART
CETTE PIECE DOIT ETRE IMPERATIVEMENT COMMANDEE AVEC SA DECALCOMANIE DE SECURITE
DIESES TEIL MUSS UNBEDINGT ZUSAMMEN MIT DEM SICHER HEITSHINWEISSCHILD BESTELLT WERDEN
QUESTA PARTE DEVE ESSERE IMPERATIVAMENTO COMANDATA CON LA SUA DECALCOMANIA SICUREZZA
ESTA PARTE DEBE ENCARGARSE IMPERATIVAMENTE CON SU CALCOMANIA DE SEGURIDAD

[C] FOR WHEELBASE 2,00 M
POUR EMPATTEMENT 2,00 M
FUR RADSTAND 2,00 M
PER PASSO 2,00 M
POR BATALLA 2,00 M

[D] FOR WHEELBASE 2,30 M
POUR EMPATTEMENT 2,30 M
FUR RADSTAND 2,30 M
PER PASSO 2,30 M
POR BATALLA 2,30 M

Tractor Cab Cabine Tracteur Schlepperkabine Cabina Trattore Cabina Tractor	Fenders Ailes Kotfluegel Parafango Guardabarros	110-100	

1-WU07-002-D

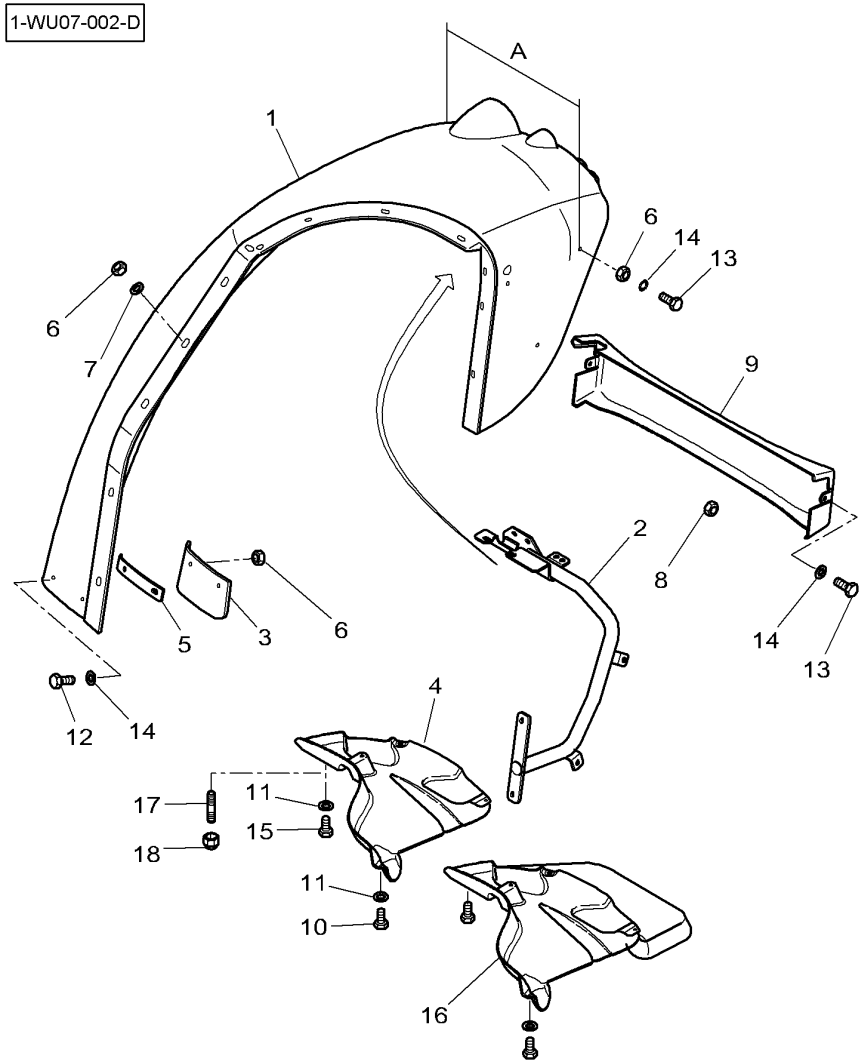

[E] FOR WHEELBASE 2,55 M
POUR EMPATTEMENT 2,55 M
FUR RADSTAND 2,55 M
PER PASSO 2,55 M
POR BATALLA 2,55 M

Tractor Cab Cabine Tracteur Schlepperkabine Cabina Trattore Cabina Tractor	Fenders Ailes Kotfluegel Parafango Guardabarros	110-105	

1-WU07-001-H

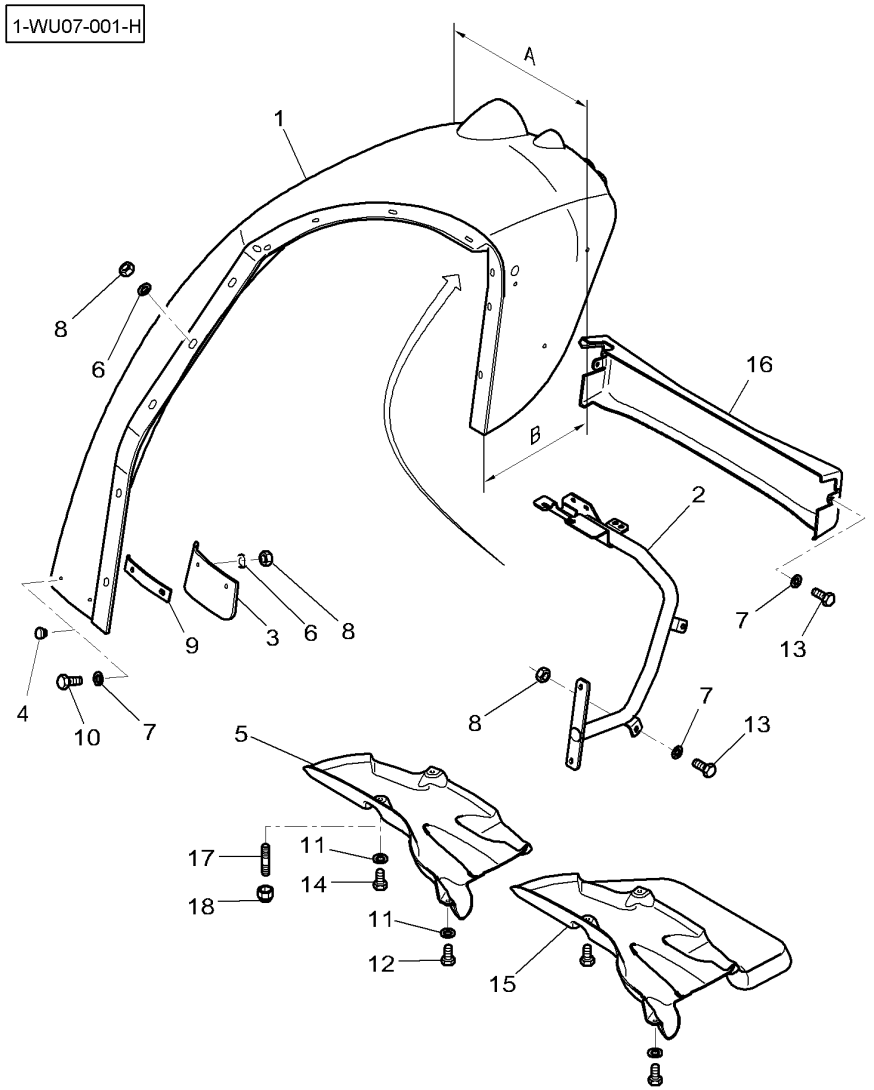

1	3786909P1	[BC] ◀ A = 576 MM B = 190 MM	**1**	FENDER	AILE PARAFANGO.	SCHUTZBLECH GUARDABARROS.
1	3786910P2	[BC] ▶ A = 576 MM B = 190 MM	**1**	FENDER	AILE PARAFANGO.	SCHUTZBLECH GUARDABARROS.
2	3787105M1	[C] ◀	**1**	SUPPORT	SUPPORT SOPPORTO	TRAGER SOPORTE
2	3787106M1	[C] ▶	**1**	SUPPORT	SUPPORT SOPPORTO	TRAGER SOPORTE
3*	4277275M1	[C] ▶	**1**	EXTENSION	RALLONGE PROLUNGA	VERLAENGERUNG ENSANCHE
3*	3787129M1	[C] ◀	**1**	EXTENSION	RALLONGE PROLUNGA	VERLAENGERUNG ENSANCHE
4	3713742M1		**4**	PLUG	BOUCHON TAPPO	STOPFEN TAPON
5	3787117M1	[C] ◀	**1**	PROTECTOR	PROTECTEUR PROTETTORE	SCHUTZ PROTECTOR
5	3787118M1	[C] ▶	**1**	PROTECTOR	PROTECTEUR PROTETTORE	SCHUTZ PROTECTOR
6	391039X1	∅ 8-24 X 2	**24**	FLAT WASHER	RONDELLE PLATE RONDELLE PIANA	UNTERLEGSCHEIBEN ARANDELA PLANA
7	385361X1	∅ 9-17 X 3,2	**14**	WASHER	RONDELLE RONDELLA	SCHEIBE ARANDELA
8	394367X1	M8	**32**	NUT	ECROU DADO	MUTTER TUERCA
9	3787195M1	[C]	**2**	SUPPORT	SUPPORT SOPPORTO	TRAGER SOPORTE
10	3010910X1	M8 X 25	**4**	SCREW	VIS VITE	SCHRAUBE TORNILLO
11*	391038X1		**2**	FLAT WASHER	RONDELLE PLATE RONDELLE PIANA	UNTERLEGSCHEIBEN ARANDELA PLANA
12*	3009280X1		**2**	SCREW	VIS VITE	SCHRAUBE TORNILLO
13*	339761X1	M8 X 25	**4**	HEX. SOCK. SCREW	VIS TETE HEX VITE PARKER	ZYLINDERSCHRAUBE TORN.CAB.HUECA
13*	339009X1	M8 X 35	**2**	HEX. SOCK. SCREW	VIS TETE HEX VITE PARKER	ZYLINDERSCHRAUBE TORN.CAB.HUECA
14*	3009280X1		**4**	SCREW	VIS VITE	SCHRAUBE TORNILLO
15*			**X**	NOT USED	NON UTILISE INUSATO	NICHT VERWENDET NO SE USA
16			**X**	NOT USED	NON UTILISE INUSATO	NICHT VERWENDET NO SE USA
17*	3011669X1	M6 X 16	**8**	STUD	GOUJON SPINOTTO FILETT.	STEHBOLZEN ESPARRAGO ROSCA.
18*	4280935M1		**8**	NUT	ECROU DADO	MUTTER TUERCA

Tractor Cab Cabine Tracteur Schlepperkabine Cabina Trattore Cabina Tractor	Fenders Ailes Kotfluegel Parafango Guardabarros	110-105	

1-WU07-001-H

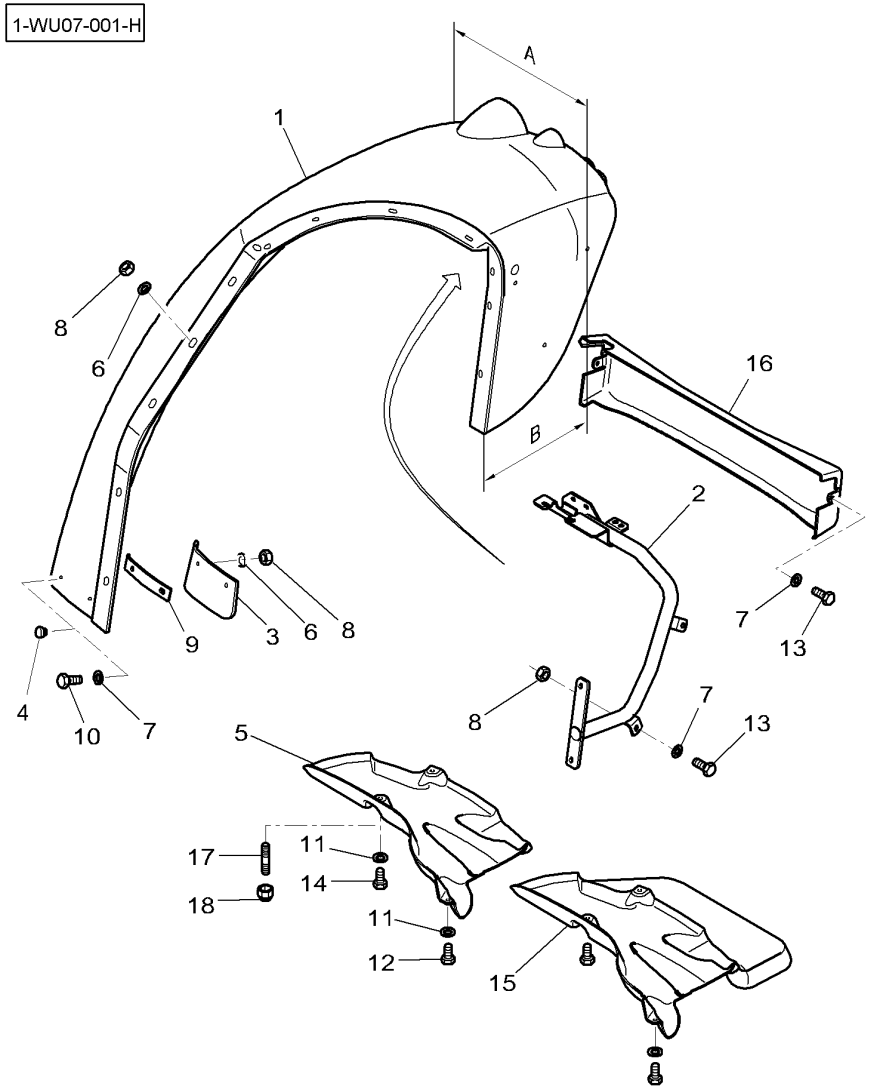

[B] THE APPROPRIATE SAFETY DECALS MUST BE ORDERED AND FITTED TO THIS PART
CETTE PIECE DOIT ETRE IMPERATIVEMENT COMMANDEE AVEC SA DECALCOMANIE DE SECURITE
DIESES TEIL MUSS UNBEDINGT ZUSAMMEN MIT DEM SICHER HEITSHINWEISSCHILD BESTELLT WERDEN
QUESTA PARTE DEVE ESSERE IMPERATIVAMENTO COMANDATA CON LA SUA DECALCOMANIA SICUREZZA
ESTA PARTE DEBE ENCARGARSE IMPERATIVAMENTE CON SU CALCOMANIA DE SEGURIDAD

[C] FOR WHEELBASE 2,00 M
POUR EMPATTEMENT 2,00 M
FUR RADSTAND 2,00 M
PER PASSO 2,00 M
POR BATALLA 2,00 M

Tractor Cab Cabine Tracteur Schlepperkabine Cabina Trattore Cabina Tractor	Fenders Ailes Kotfluegel Parafango Guardabarros	**110-110**	

1-WU07-013-A

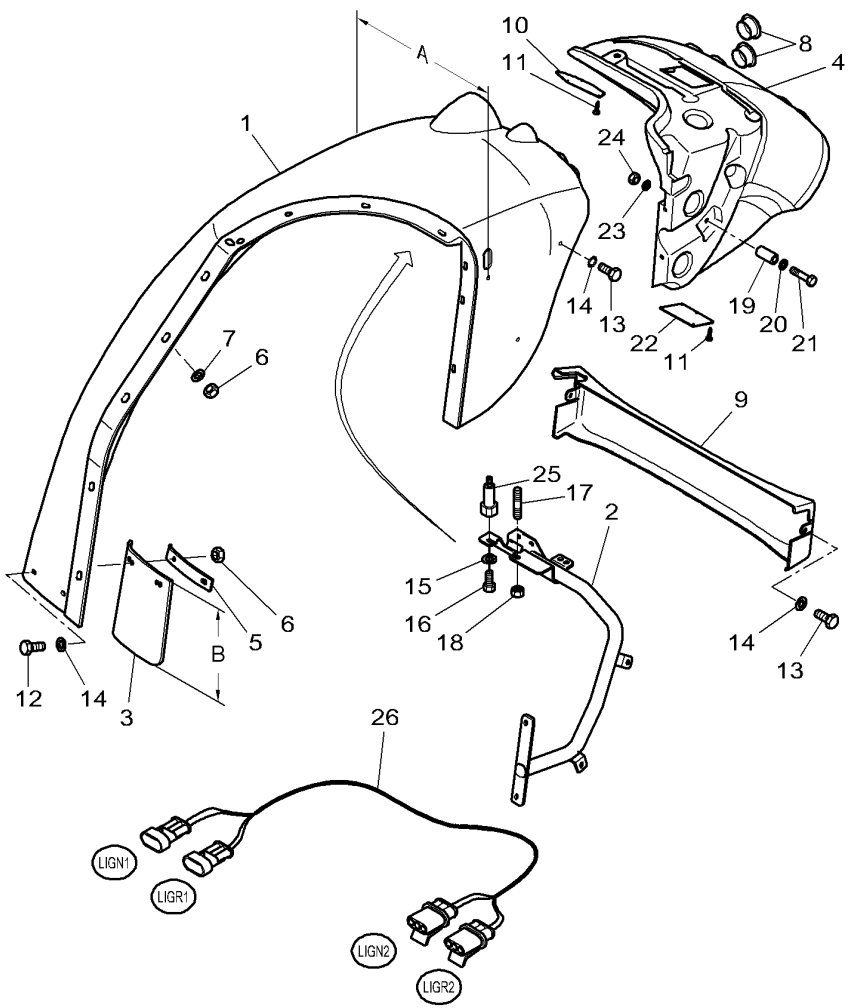

1 * 3786919P1	[A] ◀ A=843 MM	**1**	FENDER	AILE PARAFANGO.	SCHUTZBLECH GUARDABARROS.
1 * 3786920P1	[A] ◀ A=843 MM	**1**	FENDER	AILE PARAFANGO.	SCHUTZBLECH GUARDABARROS.
1 * 3786913P1	[B] ◀ A=721 MM	**1**	FENDER	AILE PARAFANGO.	SCHUTZBLECH GUARDABARROS.
1 * 3786914P1	[B] ▶ A=721 MM	**1**	FENDER	AILE PARAFANGO.	SCHUTZBLECH GUARDABARROS.
2 * 3787115M1	[A] ◀	**1**	SUPPORT	SUPPORT SOPPORTO	TRAGER SOPORTE
2 * 3787116M1	[A] ▶	**1**	SUPPORT	SUPPORT SOPPORTO	TRAGER SOPORTE
2 * 3787113M1	[B] ◀	**1**	SUPPORT	SUPPORT SOPPORTO	TRAGER SOPORTE
2 * 3787114M1	[B] ▶	**1**	SUPPORT	SUPPORT SOPPORTO	TRAGER SOPORTE
3 3787130M1	[A] B=110 MM	**1**	EXTENSION	RALLONGE PROLUNGA	VERLAENGERUNG ENSANCHE
3 4277274M1	[A] B=260 MM	**1**	EXTENSION	RALLONGE PROLUNGA	VERLAENGERUNG ENSANCHE
4 * 4279185M3	[A] ◀	**1**	PROTECTOR	PROTECTEUR PROTETTORE	SCHUTZ PROTECTOR
4 * 4279184M3	[A] ▶	**1**	PROTECTOR	PROTECTEUR PROTETTORE	SCHUTZ PROTECTOR
4 * 4279183M3	[B] ◀	**1**	PROTECTOR	PROTECTEUR PROTETTORE	SCHUTZ PROTECTOR
4 * 4279182M3	[B] ▶	**1**	PROTECTOR	PROTECTEUR PROTETTORE	SCHUTZ PROTECTOR
5 3787196M1	[A]	**2**	SUPPORT	SUPPORT SOPPORTO	TRAGER SOPORTE
6 394367X1	M8	**30**	NUT	ECROU DADO	MUTTER TUERCA
7 391039X1	∅ 8-24 X 2	**24**	FLAT WASHER	RONDELLE PLATE RONDELLE PIANA	UNTERLEGSCHEIBEN ARANDELA PLANA
8 4274755M2		**8**	PLUG	BOUCHON TAPPO	STOPFEN TAPON
9 4280841P91	[C]	**1**	BAND	BANDE NASTRO	BAND BANDA
10 4279186M1		**2**	PLATE	PLAQUE PIASTRA	PLATTE PLATO
11 3580117M1		**20**	SELF TAP SCREWS	VIS AUTO TARAUD KITAUTOBLOCCANTE	SCHNEIDSCHRAUBEN TORNILLO CHAPA
12 3010910X1	M8 X 25	**4**	SCREW	VIS VITE	SCHRAUBE TORNILLO
13 * 339761X1	M8 X 25	**2**	HEX. SOCK. SCREW	VIS TETE HEX VITE PARKER	ZYLINDERSCHRAUBE TORN.CAB.HUECA

Tractor Cab Cabine Tracteur Schlepperkabine Cabina Trattore Cabina Tractor	Fenders Ailes Kotfluegel Parafango Guardabarros	**110-110**	

1-WU07-013-A

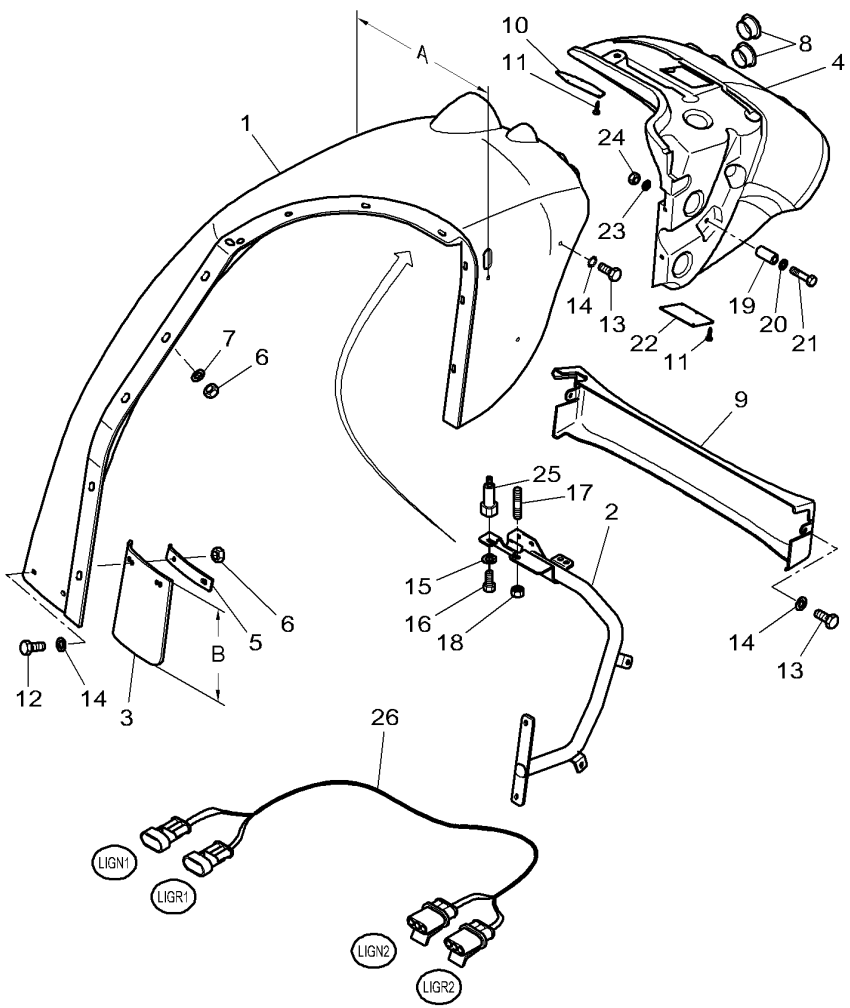

13*	339009X1	M8 X 35	**2**	HEX. SOCK. SCREW	VIS TETE HEX VITE PARKER	ZYLINDERSCHRAUBE TORN.CAB.HUECA
14	385361X1	∅ 9-17 X 3,2	**12**	WASHER	RONDELLE RONDELLA	SCHEIBE ARANDELA
15	3386192M1		**6**	WASHER	RONDELLE RONDELLA	SCHEIBE ARANDELA
15*	391039X1	∅ 8-24 X 2	**2**	FLAT WASHER	RONDELLE PLATE RONDELLE PIANA	UNTERLEGSCHEIBEN ARANDELA PLANA
16*	3009257X1	M6 X 35	**4**	SCREW	VIS VITE	SCHRAUBE TORNILLO
16*	3009283X1	M6 X 30	**2**	SCREW	VIS VITE	SCHRAUBE TORNILLO
17	3011669X1	M6 X 16	**8**	STUD	GOUJON SPINOTTO FILETT.	STEHBOLZEN ESPARRAGO ROSCA.
18	4280935M1		**8**	NUT	ECROU DADO	MUTTER TUERCA
19	3011714X1		**2**	SPACER	ENTRETOISE DISTANZIALE	ABSTANDSTUECK DISCO ESPACIADOR
20	385361X1		**2**	WASHER	RONDELLE RONDELLA	SCHEIBE ARANDELA
21	390246X1		**2**	HEX. SOCK. SCREW	VIS TETE HEX VITE PARKER	ZYLINDERSCHRAUBE TORN.CAB.HUECA
22	4279187M1		**1**	PLATE	PLAQUE PIASTRA	PLATTE PLATO
23	391039X1	∅ 8-24 X 2	**2**	FLAT WASHER	RONDELLE PLATE RONDELLE PIANA	UNTERLEGSCHEIBEN ARANDELA PLANA
24	394367X1		**2**	NUT	ECROU DADO	MUTTER TUERCA
25*	4279200M2		**4**	SPACER	ENTRETOISE DISTANZIALE	ABSTANDSTUECK DISCO ESPACIADOR
26	4280885M1		**3**	HARNESS	FAISCEAU FASCIOCAVI	KABELBAUM MAZO CABLES

[A] FOR WHEELBASE 2,55 M
POUR EMPATTEMENT 2,55 M
FUR RADSTAND 2,55 M
PER PASSO 2,55 M
POR BATALLA 2,55 M

[B] FOR WHEELBASE 2,30 M
POUR EMPATTEMENT 2,30 M
FUR RADSTAND 2,30 M
PER PASSO 2,30 M
POR BATALLA 2,30 M

[C] THE APPROPRIATE SAFETY DECALS MUST BE ORDERED AND FITTED TO THIS PART
CETTE PIECE DOIT ETRE IMPERATIVEMENT COMMANDEE AVEC SA DECALCOMANIE DE SECURITE
DIESES TEIL MUSS UNBEDINGT ZUSAMMEN MIT DEM SICHER HEITSHINWEISSCHILD BESTELLT WERDEN
QUESTA PARTE DEVE ESSERE IMPERATIVAMENTO COMANDATA CON LA SUA DECALCOMANIA SICUREZZA
ESTA PARTE DEBE ENCARGARSE IMPERATIVAMENTE CON SU CALCOMANIA DE SEGURIDAD

Air Conditioner Air Conditionne Klimaanlage Aria Condizionata Aire Acondicionado	Hose Durite Schlauch Tubo Flexible	110-115	

1-WU45-011-A

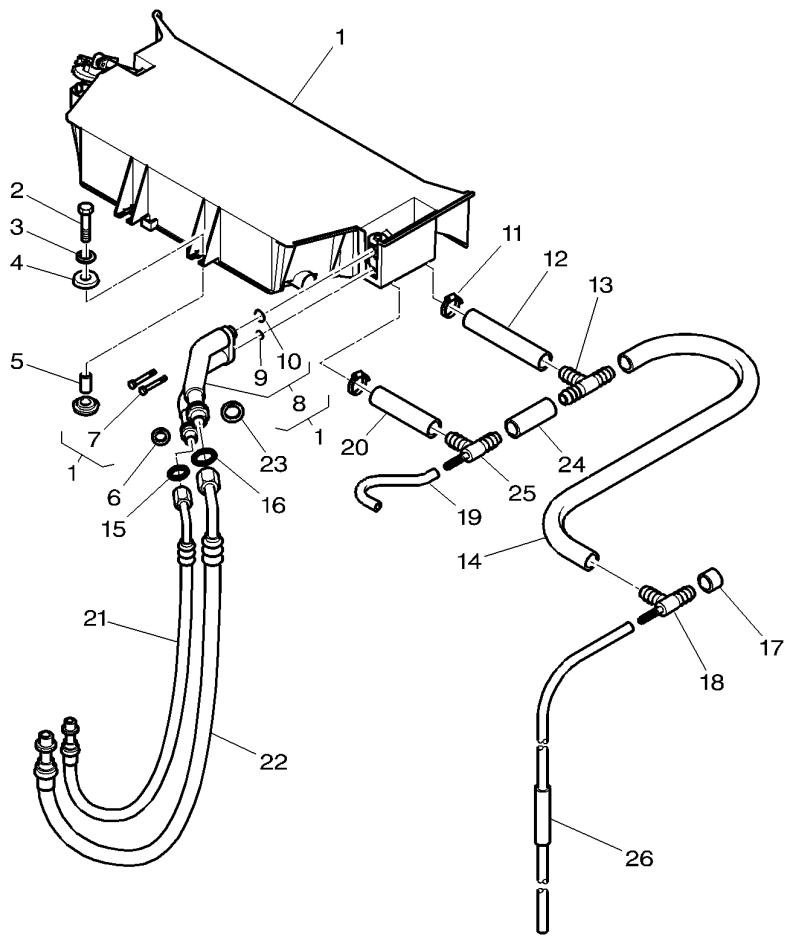

1	*	4272839M94	[A] 110-130 No 1	1	AIR CONDITIONER	CONDITIONNEUR CONDIZIONATORE	KLIMAANLAGE ACONDIC.DE AIRE
1	*	4272840M92	[B] 110-135 No 1	1	AIR CONDITIONER	CONDITIONNEUR CONDIZIONATORE	KLIMAANLAGE ACONDIC.DE AIRE
2		339337X1	M8 X 30	4	HEX. SOCK. SCREW	VIS TETE HEX VITE PARKER	ZYLINDERSCHRAUBE TORN.CAB.HUECA
3		391039X1	∅ 8-24 X 2	4	FLAT WASHER	RONDELLE PLATE RONDELLE PIANA	UNTERLEGSCHEIBEN ARANDELA PLANA
4		3387512M1		8	BUFFER	BUTOIR RESPINGENTE	PUFFER PARACHOQUES
5		3387513M1	∅ 9-11 X 16	4	SPACER	ENTRETOISE DISTANZIALE	ABSTANDSTUECK DISCO ESPACIADOR
6		3011495X1	∅ 16 mm	1	BUSH	BAGUE BOCCOLA	RING CASQUILLO
7		3001758X1	1 M6 X 50	2	SCREW METRIC	VIS METRIQUE VITE METRICA	SCHRAUBE METR TORNILLO METRICO
8		3786651M91	1	1	TUBE ASSY	ENSEMBLE TUBE TUBO COMPL.	ROHR KPL CONJ.DE TUBO
9		3820743M1	8 ∅ 6,7 X 1,8	1	O RING	JOINT TORIQUE GIUNTO DI TENUTA	O-RING JUNTA TOROIDAL
10		3820742M1	8 ∅ 13,4 X 2,4	1	O RING	JOINT TORIQUE GIUNTO DI TENUTA	O-RING JUNTA TOROIDAL
11		3019564X1	∅ 16-25	2	HOSE CLIP	COLLIER DURITE COLLARE DI TUBO	SCHLAUCHBINDER ABRAZADERA TUBO
12		3777617M1	◀▶ 218 mm	1	HOSE	DURITE TUBO FLESSIBILE	SCHLAUCH TUBO DE GOMA
13		3010683X1		1	TEEPIECE	TE RACCORDO A T	T-STUECK PIEZA EN T
14		3778361M1	◀▶ 529 mm	1	WATER HOSE	DURITE EAU TUBOFLEX ACQUA	WASSERSCHLAUCH MANGUERA P.AGUA
15		**3010471X1**	∅ 7,65 mm	1	O RING	JOINT TORIQUE GIUNTO DI TENUTA	O-RING JUNTA TOROIDAL
16		3010473X1	∅ 14 mm	1	O RING	JOINT TORIQUE GIUNTO DI TENUTA	O-RING JUNTA TOROIDAL
17		3777737M1		1	PLUG	BOUCHON TAPPO	STOPFEN TAPON
18		3388779M1		1	UNION	RACCORD RACCORDO	VERSCHRAUBUNG RACOR
19		4275132M1	◀▶ 100 mm	1	HOSE	DURITE TUBO FLESSIBILE	SCHLAUCH TUBO DE GOMA
20		3777615M1	◀▶ 179 mm	1	HOSE	DURITE TUBO FLESSIBILE	SCHLAUCH TUBO DE GOMA
21	*	3786653M2	◀▶ 2230 mm	1	HYDR. HOSE	FLEXIBLE TUBOFLEX IDRAUL	HYDR. SCHLAUCH TUBO HIDRAULICO
22	*	3786654M2	◀▶ 2280 mm	1	HYDR. HOSE	FLEXIBLE TUBOFLEX IDRAUL	HYDR. SCHLAUCH TUBO HIDRAULICO
23		3011496X1	∅ 22 mm	1	BUSH	BAGUE BOCCOLA	RING CASQUILLO
24		3777613M1	◀▶ 60 mm	1	HOSE	DURITE TUBO FLESSIBILE	SCHLAUCH TUBO DE GOMA
25		3388779M1		1	UNION	RACCORD RACCORDO	VERSCHRAUBUNG RACOR

1-WU45-011-A

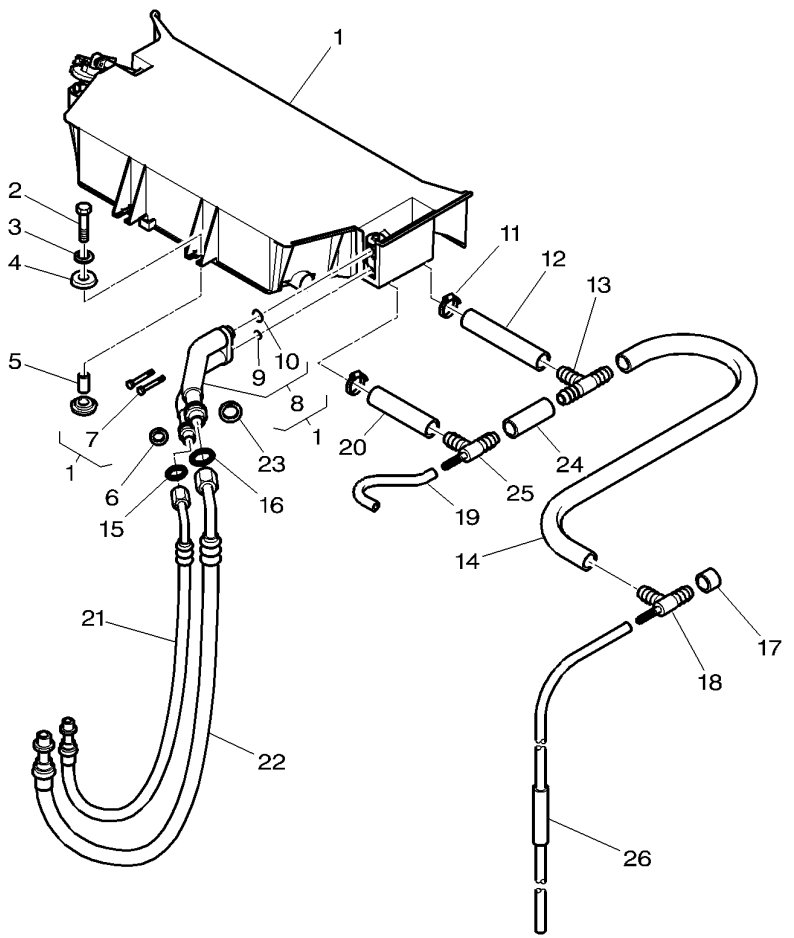

26	4276778M91	◀▶ 850 mm	**1** TUBE ASSY	ENSEMBLE TUBE TUBO COMPL.	ROHR KPL CONJ.DE TUBO

[A] MANUAL AIR CONDITIONER
CLIMATISEUR MANUEL
HAND KLIMAANLAGE
CONDIZIONATORE DI ARIA MANUAL
ACONDICIONADOR DE AIRE MANUALE

[B] AUTOMATIC AIR CONDITIONER
CLIMATISEUR AUTOMATIQUE
AUTOMATISCH KLIMAANLAGE
CONDIZIONATORE DI ARIA AUTOMATICO
ACONDICIONADOR DE AIRE AUTOMATICO

Air Conditioner	Hose	110-120	Standard Roof - Manual Air Conditioner
Air Conditionne	Durite		Toit Standard - Climatiseur Manuel
Klimaanlage	Schlauch		Standard Dach - Hand Klimaanlage
Aria Condizionata	Tubo		Tetto Standard - Condizionatore Di Aria Manual
Aire Acondicionado	Flexible		Tejado Standard - Acondicionador De Aire Manuale

1-WU45-012-B

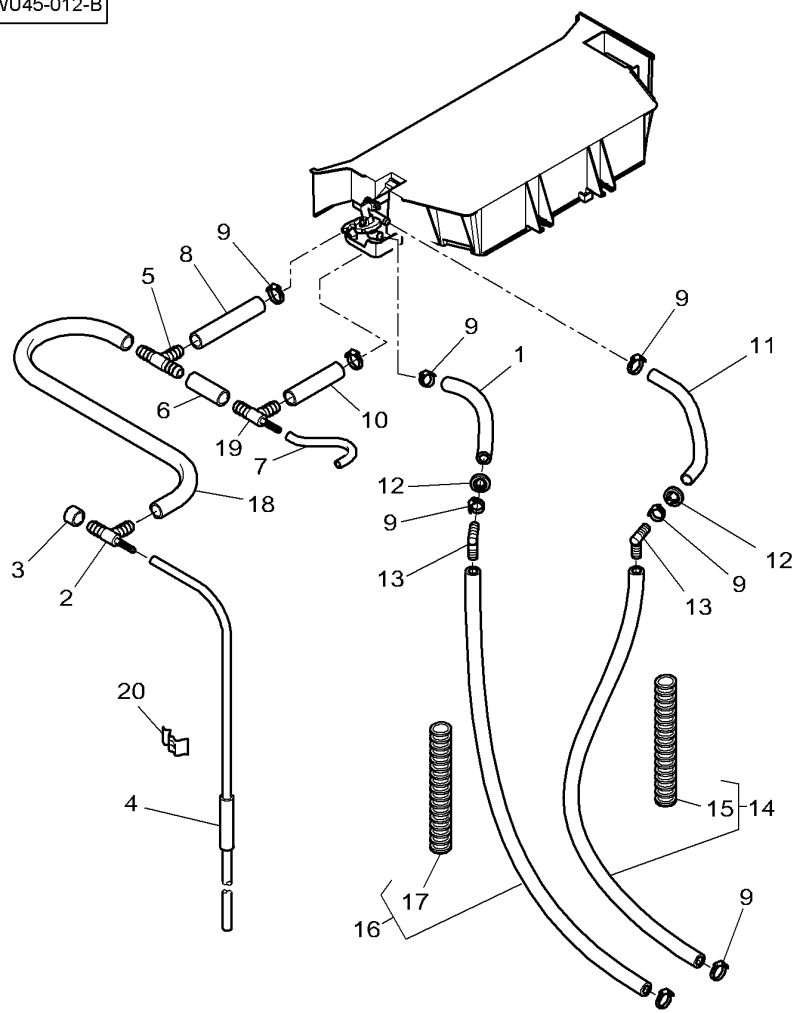

1	3787186M1	◀▶ 200 mm	1	HOSE	DURITE TUBO FLESSIBILE	SCHLAUCH TUBO DE GOMA
2	3388779M1		1	UNION	RACCORD RACCORDO	VERSCHRAUBUNG RACOR
3	3777737M1		1	PLUG	BOUCHON TAPPO	STOPFEN TAPON
4	4276778M91	◀▶ 850 mm	1	TUBE ASSY	ENSEMBLE TUBE TUBO COMPL.	ROHR KPL CONJ.DE TUBO
5	3010683X1		1	TEEPIECE	TE RACCORDO A T	T-STUECK PIEZA EN T
6	3777613M1	◀▶ 60 mm	1	HOSE	DURITE TUBO FLESSIBILE	SCHLAUCH TUBO DE GOMA
7	4275132M1	◀▶ 100 mm	1	HOSE	DURITE TUBO FLESSIBILE	SCHLAUCH TUBO DE GOMA
8	3777617M1	◀▶ 218 mm	1	HOSE	DURITE TUBO FLESSIBILE	SCHLAUCH TUBO DE GOMA
9*	3019564X1	∅ 16-25	6	HOSE CLIP	COLLIER DURITE COLLARE DI TUBO	SCHLAUCHBINDER ABRAZADERA TUBO
10	3777615M1	◀▶ 179 mm	1	HOSE	DURITE TUBO FLESSIBILE	SCHLAUCH TUBO DE GOMA
11	3787187M1	◀▶ 330 mm	1	HOSE	DURITE TUBO FLESSIBILE	SCHLAUCH TUBO DE GOMA
12	3788224M1		2	GROMMET	PASSE FIL ANELLO PASSACAVO	GUMMITUELLE PASACABLE
13	3788222M1		2	ELBOW	COUDE GOMITO	WINKELSTUECK CODO
14	4277810M92	◀▶ 1720 mm	1	HOSE	DURITE TUBO FLESSIBILE	SCHLAUCH TUBO DE GOMA
15	4272050M1	14 ◀▶ 400 mm	1	SHEATH	GAINE GUAINA	HUELLE FUNDA
16	4277809M91	◀▶ 1740 mm	1	HOSE	DURITE TUBO FLESSIBILE	SCHLAUCH TUBO DE GOMA
17	4272050M1	16 ◀▶ 400 mm	1	SHEATH	GAINE GUAINA	HUELLE FUNDA
18	3778361M1	◀▶ 529 mm	1	WATER HOSE	DURITE EAU TUBOFLEX ACQUA	WASSERSCHLAUCH MANGUERA P.AGUA
19	3388779M1		1	UNION	RACCORD RACCORDO	VERSCHRAUBUNG RACOR
20*			X	NOT USED	NON UTILISE INUSATO	NICHT VERWENDET NO SE USA

Air Conditioner **Air Conditionne** **Klimaanlage** **Aria Condizionata** **Aire Acondicionado**	**Hose** **Durite** **Schlauch** **Tubo** **Flexible**	**110-125**	**Standard Roof - Automatic Air Conditioner** **Toit Standard - Climatiseur Automatique** **Standard Dach - Automatisch Klimaanlage** **Tetto Standard - Condizionatore Di Aria Automatico** **Tejado Standard - Acondicionador De Aire Automatic**

1-WU45-013-A

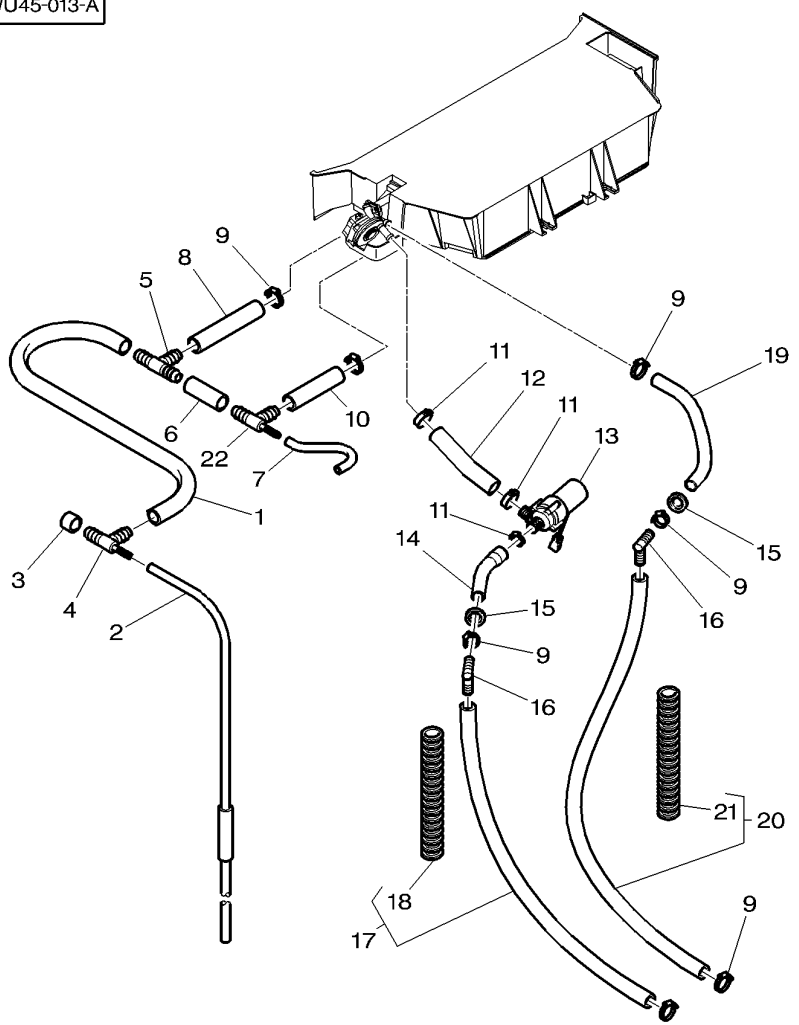

1	3778361M1	◀▶	529 mm	**1**	WATER HOSE	DURITE EAU TUBOFLEX ACQUA	WASSERSCHLAUCH MANGUERA P.AGUA
2	4276778M91			**1**	TUBE ASSY	ENSEMBLE TUBE TUBO COMPL.	ROHR KPL CONJ.DE TUBO
3	3777737M1			**1**	PLUG	BOUCHON TAPPO	STOPFEN TAPON
4	3388779M1			**1**	UNION	RACCORD RACCORDO	VERSCHRAUBUNG RACOR
5	3010683X1			**1**	TEEPIECE	TE RACCORDO A T	T-STUECK PIEZA EN T
6	3777613M1	◀▶	60 mm	**1**	HOSE	DURITE TUBO FLESSIBILE	SCHLAUCH TUBO DE GOMA
7	4275132M1	◀▶	100 mm	**1**	HOSE	DURITE TUBO FLESSIBILE	SCHLAUCH TUBO DE GOMA
8	3777617M1	◀▶	218 mm	**1**	HOSE	DURITE TUBO FLESSIBILE	SCHLAUCH TUBO DE GOMA
9	3019564X1	∅	16-25	**8**	HOSE CLIP	COLLIER DURITE COLLARE DI TUBO	SCHLAUCHBINDER ABRAZADERA TUBO
10	3777615M1	◀▶	179 mm	**1**	HOSE	DURITE TUBO FLESSIBILE	SCHLAUCH TUBO DE GOMA
11	338614X1	∅	20-32	**3**	HOSE CLIP	COLLIER DURITE COLLARE DI TUBO	SCHLAUCHBINDER ABRAZADERA TUBO
12	4271129M1	◀▶	145 mm	**1**	HOSE	DURITE TUBO FLESSIBILE	SCHLAUCH TUBO DE GOMA
13	3712744M1			**1**	WATER PUMP	POMPE A EAU POMPA ACQUA	WASSERPUMPE BOMBA DE AGUA
14	4272841M1	◀▶	150 mm	**1**	HOSE	DURITE TUBO FLESSIBILE	SCHLAUCH TUBO DE GOMA
15	3788224M1			**2**	GROMMET	PASSE FIL ANELLO PASSACAVO	GUMMITUELLE PASACABLE
16	3788222M1			**2**	ELBOW	COUDE GOMITO	WINKELSTUECK CODO
17	4277809M91	◀▶	1740 mm	**1**	HOSE	DURITE TUBO FLESSIBILE	SCHLAUCH TUBO DE GOMA
18	4272050M1	17 ◀▶	400 mm	**1**	SHEATH	GAINE GUAINA	HUELLE FUNDA
19	3787187M1	◀▶	330 mm	**1**	HOSE	DURITE TUBO FLESSIBILE	SCHLAUCH TUBO DE GOMA
20	4277810M92	∅	1720 mm	**1**	HOSE	DURITE TUBO FLESSIBILE	SCHLAUCH TUBO DE GOMA
21	4272050M1	20 ◀▶	400 mm	**1**	SHEATH	GAINE GUAINA	HUELLE FUNDA
22	3388779M1			**1**	UNION	RACCORD RACCORDO	VERSCHRAUBUNG RACOR

Air Conditioner
Air Conditionne
Klimaanlage
Aria Condizionata
Aire Acondicionado

110-130

Standard Roof - Manual Air Conditioner
Toit Standard - Climatiseur Manuel
Standard Dach - Hand Klimaanlage
Tetto Standard - Condizionatore Di Aria Manual
Tejado Standard - Acondicionador De Aire Manuale

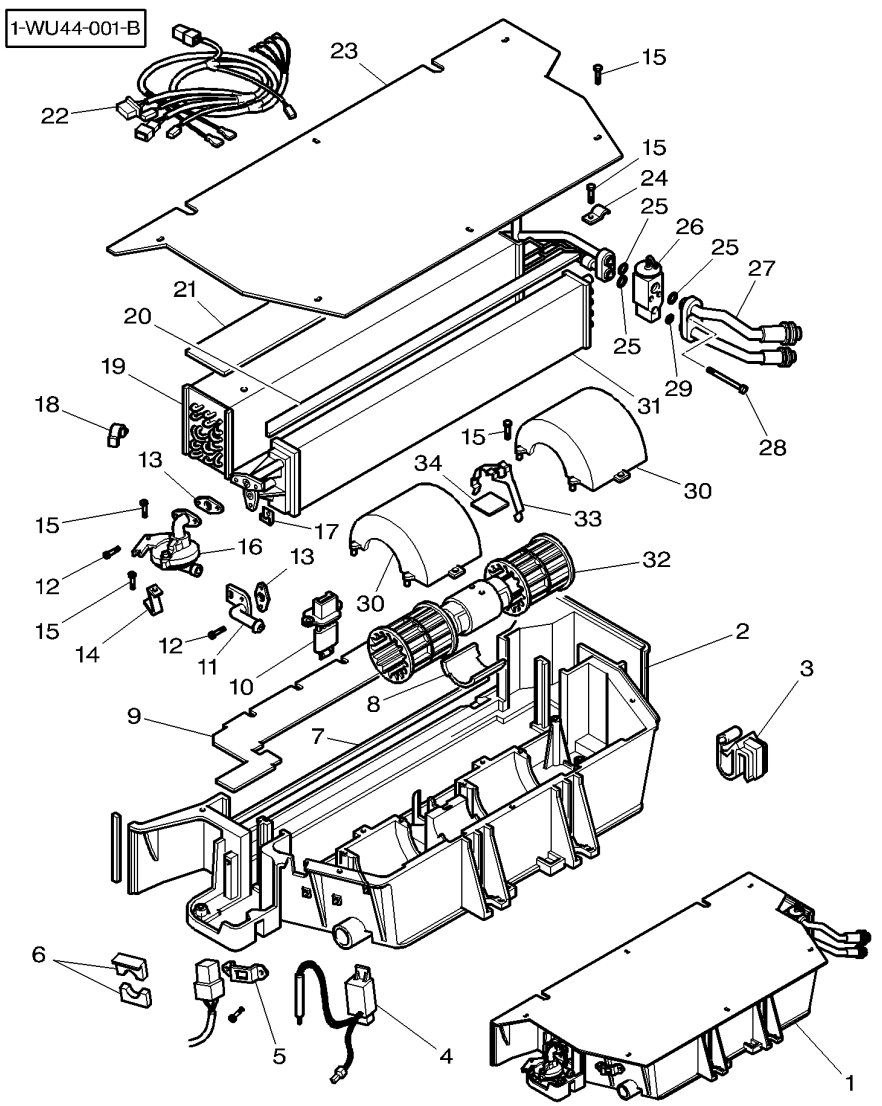

1*	4272839M94		[A]	**1**	AIR CONDITIONER	CONDITIONNEUR CONDIZIONATORE	KLIMAANLAGE ACONDIC.DE AIRE
2	3907307M1	1		**1**	HOUSING	CARTER CARCASSA	GEHAEUSE ALOJAMIENTO
3	3907306M1	1		**1**	CLIP	PATTE D'ATTACHE FERMAGLIO	SCHELLE CLIP
4	3907305M1	1		**1**	THERMOSTAT	THERMOSTAT TERMOSTATO	THERMOSTAT TERMOSTATO
5	3907304M1	1		**1**	STRAP	PATTE CORREGGIA	LASCHE FAJA
6	3907303M1	1		**1**	FOAM	MOUSSE GOMMAPIUMA	SCHAUMSTOFF ESPUMA
7	3902322M1	1		**1**	FOAM	MOUSSE GOMMAPIUMA	SCHAUMSTOFF ESPUMA
8	3907302M1	1		**1**	PROTECTOR	PROTECTEUR PROTETTORE	SCHUTZ PROTECTOR
9	3902329M2	1		**1**	PLATE	PLAQUE PIASTRA	PLATTE PLATO
10	3904295M2	1		**1**	RESISTOR	RESISTANCE RESISTORE	WIDERSTAND RESISTENCIA
11	3907301M1	1		**1**	ELBOW	COUDE GOMITO	WINKELSTUECK CODO
12	3904319M1	1	4,8 X 19	**4**	SCREW	VIS VITE	SCHRAUBE TORNILLO
13	3902327M1	1		**2**	GASKET	JOINT GIUNTO PIANO	FLACHDICHTUNG JUNTA PLANA
14	3907296M1	1		**1**	STRAP	PATTE CORREGGIA	LASCHE FAJA
15	365916X1	1	4 X 12	**13**	SELF TAP SCREWS	VIS AUTO TARAUD KITAUTOBLOCCANTE	SCHNEIDSCHRAUBEN TORNILLO CHAPA
16	3907300M1	1		**1**	COCK	ROBINET RUBINETTO	ABSPERRHAHN AGUJA INDICADORA
17	3902090M1	1		**4**	NUT	ECROU DADO	MUTTER TUERCA
18	3904589M1	1		**1**	CLIP	PATTE D'ATTACHE FERMAGLIO	SCHELLE CLIP
19	3902331M92	1		**1**	EVAPORATOR	EVAPORATEUR EVAPORATORE	VERDUNSTER EVAPORADOR
20	3310849M1	1		**1**	FOAM	MOUSSE GOMMAPIUMA	SCHAUMSTOFF ESPUMA
21	3902332M1	1		**1**	FOAM	MOUSSE GOMMAPIUMA	SCHAUMSTOFF ESPUMA
22	3907299M91	1		**1**	HARNESS	FAISCEAU FASCIOCAVI	KABELBAUM MAZO CABLES
23	3310839M1	1		**1**	PLATE	PLAQUE PIASTRA	PLATTE PLATO
24	3310836M1	1		**1**	STRAP	PATTE CORREGGIA	LASCHE FAJA
25	3902500M1	1		**3**	GASKET	JOINT GIUNTO PIANO	FLACHDICHTUNG JUNTA PLANA
26	3902334M91	1		**1**	REGULATOR	REGULATEUR REGOLATORE	REGLER REGULADOR

Air Conditioner
Air Conditionne
Klimaanlage
Aria Condizionata
Aire Acondicionado

110-130

Standard Roof - Manual Air Conditioner
Toit Standard - Climatiseur Manuel
Standard Dach - Hand Klimaanlage
Tetto Standard - Condizionatore Di Aria Manual
Tejado Standard - Acondicionador De Aire Manuale

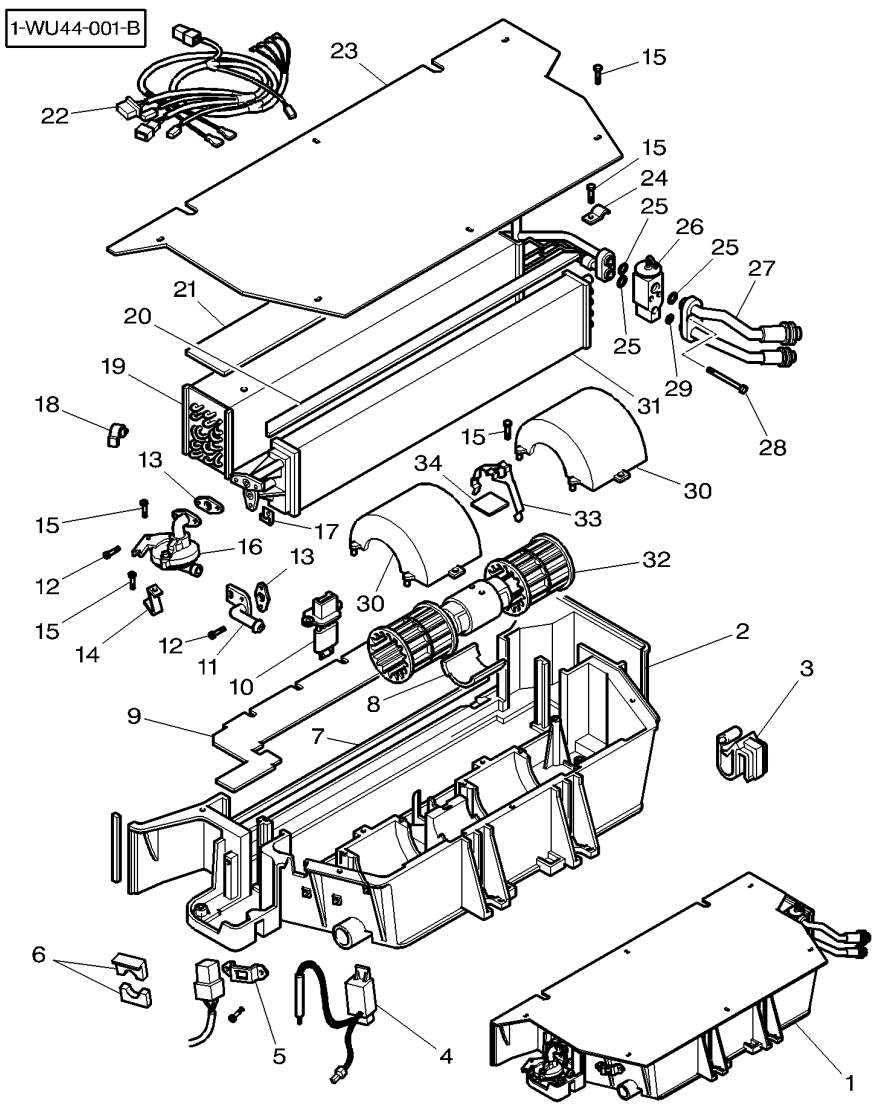

27	3907298M91	1		**1**	TUBING	TUBULURE TUBATURA	ROHRSTUTZEN TUBERIA
28	3904328M1	1	M6 X 50	**2**	SCREW	VIS VITE	SCHRAUBE TORNILLO
29	3902550M1	1		**1**	O RING	JOINT TORIQUE GIUNTO DI TENUTA	O-RING JUNTA TOROIDAL
30	3310833M1	1		**2**	COVER	COUVERCLE COPERCHIO	ABDECKUNG. CUBIERTA
31	3310827M92	1		**1**	RADIATOR	RADIATEUR RADIATORE	KUEHLER RADIADOR
32	3907297M91	1		**1**	ENGINE	MOTEUR MOTORE	MOTOR MOTOR
33	3902320M1	1		**1**	STRAP	PATTE CORREGGIA	LASCHE FAJA
34		1	[B]	**1**	PLATE	PLAQUE PIASTRA	PLATTE PLATO

[A] MANUAL AIR CONDITIONER
CLIMATISEUR MANUEL
HAND KLIMAANLAGE
CONDIZIONATORE DI ARIA MANUAL
ACONDICIONADOR DE AIRE MANUALE

[B] NOT DETAILLED
PAS DETAILLE
NICHT VERKAUFT
PASSO DETTAGLIATO
NO DETALLADO

Air Conditioner
Air Conditionne
Klimaanlage
Aria Condizionata
Aire Acondicionado

110-135

Standard Roof - Automatic Air Conditioner
Toit Standard - Climatiseur Automatique
Standard Dach - Automatisch Klimaanlage
Tetto Standard - Condizionatore Di Aria Automatico
Tejado Standard - Acondicionador De Aire Automatic

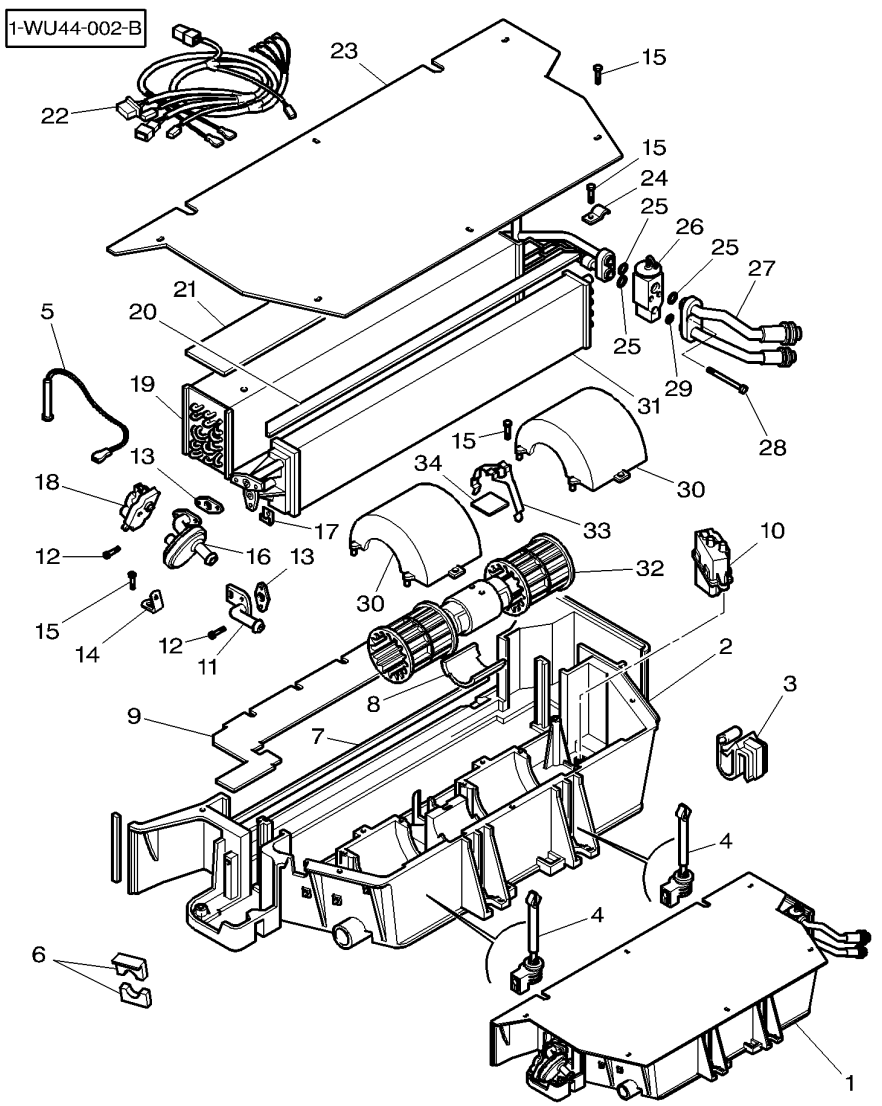

1*	4272840M92	[A]		**1**	AIR CONDITIONER	CONDITIONNEUR CONDIZIONATORE	KLIMAANLAGE ACONDIC.DE AIRE
2	3907307M1	1		**1**	HOUSING	CARTER CARCASSA	GEHAEUSE ALOJAMIENTO
3	3907306M1	1		**1**	CLIP	PATTE D'ATTACHE FERMAGLIO	SCHELLE CLIP
4	3907313M1	1		**2**	SENSOR	DETECTEUR SENSORE	SENSOR DETECTOR
5	3907316M1	1		**1**	SENDER	EMETTEUR EMITTENTE	GEBER EMISOR
6	3907303M1	1		**2**	FOAM	MOUSSE GOMMAPIUMA	SCHAUMSTOFF ESPUMA
7	3902322M1	1		**1**	FOAM	MOUSSE GOMMAPIUMA	SCHAUMSTOFF ESPUMA
8	3907302M1	1		**1**	PROTECTOR	PROTECTEUR PROTETTORE	SCHUTZ PROTECTOR
9	3902329M2	1		**1**	PLATE	PLAQUE PIASTRA	PLATTE PLATO
10	3907310M1	1		**1**	REGULATOR	REGULATEUR REGOLATORE	REGLER REGULADOR
11	3907301M1	1		**1**	ELBOW	COUDE GOMITO	WINKELSTUECK CODO
12	3904319M1	1	4,8 X 19	**4**	SCREW	VIS VITE	SCHRAUBE TORNILLO
13	3902327M1	1		**2**	GASKET	JOINT GIUNTO PIANO	FLACHDICHTUNG JUNTA PLANA
14	3907314M1	1		**1**	STRAP	PATTE CORREGGIA	LASCHE FAJA
15	365916X1	1	4 X 12	**15**	SELF TAP SCREWS	VIS AUTO TARAUD KITAUTOBLOCCANTE	SCHNEIDSCHRAUBEN TORNILLO CHAPA
16	3907312M1	1		**1**	COCK	ROBINET RUBINETTO	ABSPERRHAHN AGUJA INDICADORA
17	3902090M1	1		**4**	NUT	ECROU DADO	MUTTER TUERCA
18		1	REF. 16	**1**	ENGINE	MOTEUR MOTORE	MOTOR MOTOR
19	3902331M92	1		**1**	EVAPORATOR	EVAPORATEUR EVAPORATORE	VERDUNSTER EVAPORADOR
20	3310849M1	1		**1**	FOAM	MOUSSE GOMMAPIUMA	SCHAUMSTOFF ESPUMA
21	3902332M1	1		**1**	FOAM	MOUSSE GOMMAPIUMA	SCHAUMSTOFF ESPUMA
22	3907315M1	1		**1**	HARNESS	FAISCEAU FASCIOCAVI	KABELBAUM MAZO CABLES
23	3310839M1	1		**1**	PLATE	PLAQUE PIASTRA	PLATTE PLATO
24	3310836M1	1		**1**	STRAP	PATTE CORREGGIA	LASCHE FAJA
25	3902500M1	1		**3**	GASKET	JOINT GIUNTO PIANO	FLACHDICHTUNG JUNTA PLANA
26	3902334M91	1		**1**	REGULATOR	REGULATEUR REGOLATORE	REGLER REGULADOR

Air Conditioner
Air Conditionne
Klimaanlage
Aria Condizionata
Aire Acondicionado

110-135

Standard Roof - Automatic Air Conditioner
Toit Standard - Climatiseur Automatique
Standard Dach - Automatisch Klimaanlage
Tetto Standard - Condizionatore Di Aria Automatico
Tejado Standard - Acondicionador De Aire Automatic

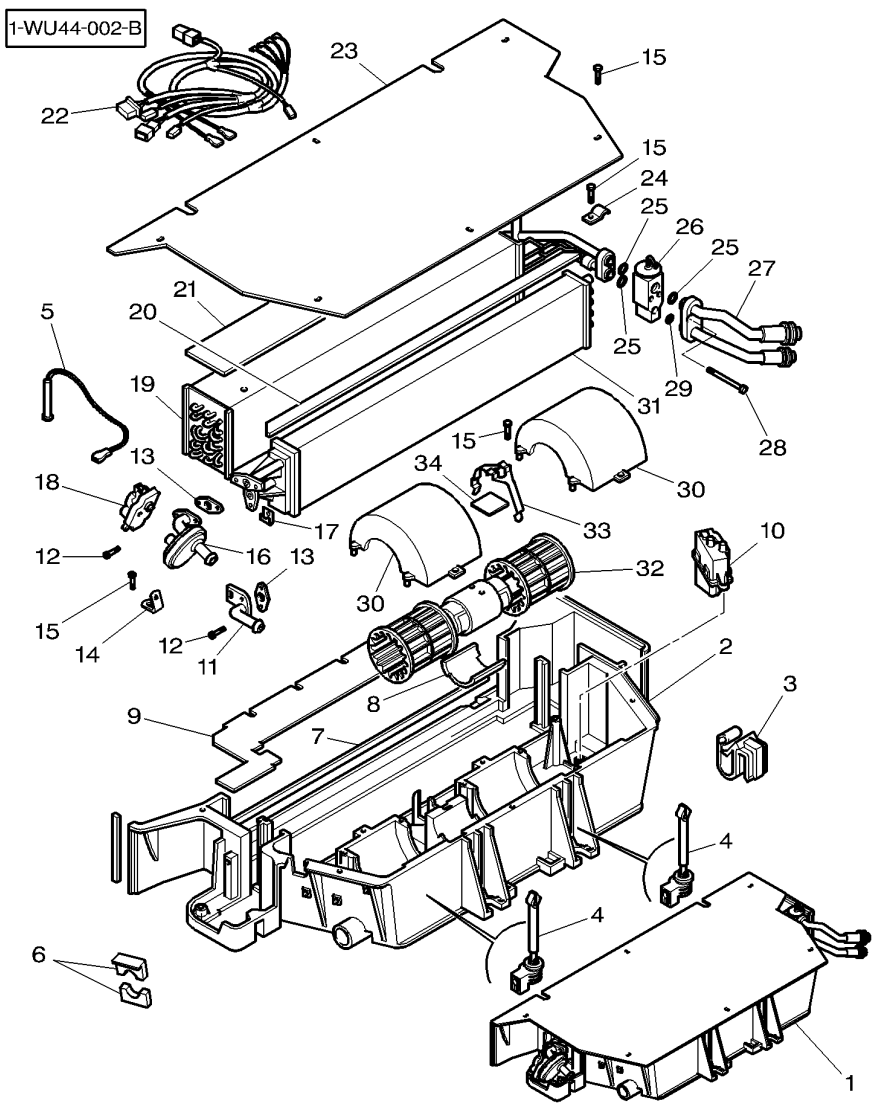

27	3907298M91	1	**1**	TUBING	TUBULURE TUBATURA	ROHRSTUTZEN TUBERIA
28	3904328M1	1	**2**	SCREW	VIS VITE	SCHRAUBE TORNILLO
29	3902550M1	1	**1**	O RING	JOINT TORIQUE GIUNTO DI TENUTA	O-RING JUNTA TOROIDAL
30	3310833M1	1	**1**	COVER	COUVERCLE COPERCHIO	ABDECKUNG. CUBIERTA
31	3310827M92	1	**1**	RADIATOR	RADIATEUR RADIATORE	KUEHLER RADIADOR
32	3907297M91	1	**1**	ENGINE	MOTEUR MOTORE	MOTOR MOTOR
33	3902320M1	1	**1**	STRAP	PATTE CORREGGIA	LASCHE FAJA
34		1 [B]	**1**	PLATE	PLAQUE PIASTRA	PLATTE PLATO

[A] AUTOMATIC AIR CONDITIONER
CLIMATISEUR AUTOMATIQUE
AUTOMATISCH KLIMAANLAGE
CONDIZIONATORE DI ARIA AUTOMATICO
ACONDICIONADOR DE AIRE AUTOMATICO

[B] NOT DETAILLED
PAS DETAILLE
NICHT VERKAUFT
PASSO DETTAGLIATO
NO DETALLADO

Cab Filter
Filtre De Cabine
Filter Die Kabine
Filtro Di Cabina
Filtro De Cabina

110-140

1-WU48-001-A

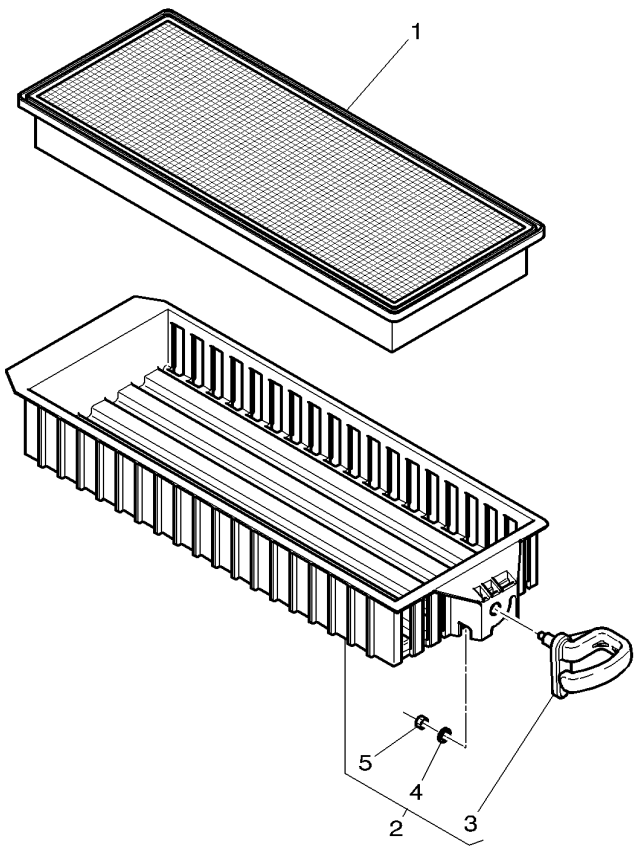

1	* **3786649M3**	200 X 500	**1**	CAB FILTER	FILTRE CABINE FILTRO CABINA	KABINE FILTER FILTRO CABINA
2	3786650M91		**1**	FRAME ASSY	CADRE TELAIO COMPLETO	RAHMEN KPL CJTO.BASTIDOR
3	3788950M91	2	**1**	GRIP	POIGNEE MANIGLIA	HANDGRIFF MANGO
4	390971X1	2 ∅ 6-12 X 1,5	**1**	FLAT WASHER	RONDELLE PLATE RONDELLE PIANA	UNTERLEGSCHEIBEN ARANDELA PLANA
5	1441462X1	2 M6	**1**	LOCKNUT	ECROU FREIN AUTOBLOCCANTE	SICHERUNGSMUTTER CONTRATUERCA

Heater Control
Commande De Chauffage
Heizung Schaltung
Comando De Riscaldamento
Mando De Calefaccoin

110-145

1-WU40-004-E

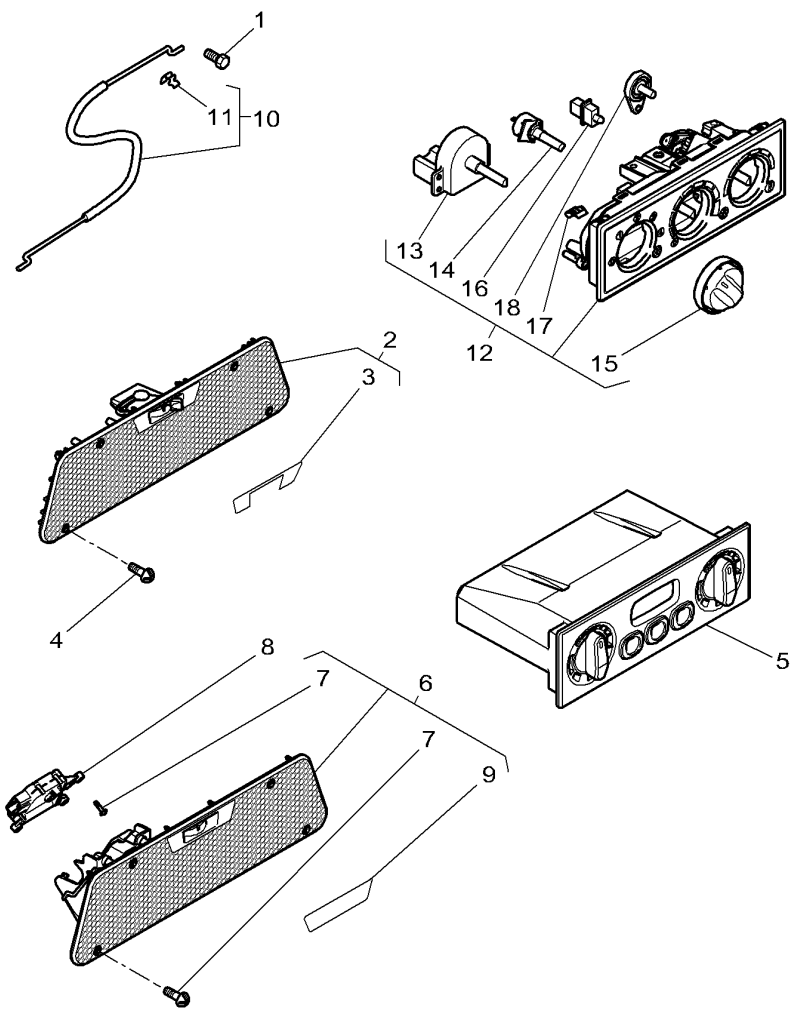

1	*	1442171X1	[AC] M4 X 10	**1**	HEX. SOCK. SCREW	VIS TETE HEX VITE PARKER	ZYLINDERSCHRAUBE TORN.CAB.HUECA
2		4273553M93	[A]	**1**	VENTILATOR	AERATEUR VENTOLA	VENTILATOR RULO DE SACO
3		4273546M3	2	**1**	DECAL	DECALCOMANIE DECALCOMANIA	AUFKLEBER CALCOMANIA
4		3010804X1	M4 X 16	**4**	SCREW	VIS VITE	SCHRAUBE TORNILLO
5	*	3786660M95	[BD]	**1**	PLATE CONTROL	PLATINE DE CDE PIASTRA APPOGIO	KLEMMPLATTE. PLACA DE ABRAZO.
6	*	4273545M92	[B]	**1**	VENTILATOR	AERATEUR VENTOLA	VENTILATOR RULO DE SACO
7	*	4271132M1	6 [B] M3,5 X 14	**7**	SCREW	VIS VITE	SCHRAUBE TORNILLO
8	*	4271130M1	[B]	**1**	ENGINE	MOTEUR MOTORE	MOTOR MOTOR
9	*	4272835M2	6 [B]	**1**	DECAL	DECALCOMANIE DECALCOMANIA	AUFKLEBER CALCOMANIA
10		4271161M1	[A]	**1**	CABLE	CABLE CAVO	KABEL CABLE
11		1696477M1	10 [A]	**1**	CLIP	PATTE D'ATTACHE FERMAGLIO	SCHELLE CLIP
12		3786659M2	[A]	**1**	PLATE CONTROL	PLATINE DE CDE PIASTRA APPOGIO	KLEMMPLATTE. PLACA DE ABRAZO.
13		3907283M1	12	**1**	SWITCH	INTERRUPTEUR INTERRUTTORE	SCHALTER INTERRUPTOR
14		3907282M1	12	**1**	POTENTIOMETER	POTENTIOMETRE POTENZIOMETRO	POTENTIOMETER REGULADOR ELECT.
15		3907285M1	12	**3**	KNOB	POMMEAU POMELO	KNOPF POMO
16		**3907284M1**	12	**1**	DIODE	DIODE DIODO	DIODE DIODO
17		3907642M1	12	**4**	TIE	ATTACHE TRAVERSA ATTACCO	ANBINDUNG BARRA DE ENLACE
18	*	3907909M1	12	**1**	LEVER	LEVIER LEVA	HEBEL PALANCA

[A] MANUAL AIR CONDITIONER
CLIMATISEUR MANUEL
HAND KLIMAANLAGE
CONDIZIONATORE DI ARIA MANUAL
ACONDICIONADOR DE AIRE MANUALE

[B] AUTOMATIC AIR CONDITIONER
CLIMATISEUR AUTOMATIQUE
AUTOMATISCH KLIMAANLAGE
CONDIZIONATORE DI ARIA AUTOMATICO
ACONDICIONADOR DE AIRE AUTOMATICO

[C] HEATER
CHAUFFAGE
HEIZUNG
RISCALDATORE
CALEFACTOR

Heater Control Commande De Chauffage Heizung Schaltung Comando De Riscaldamento Mando De Calefaccoin	110-145	

1-WU40-004-E

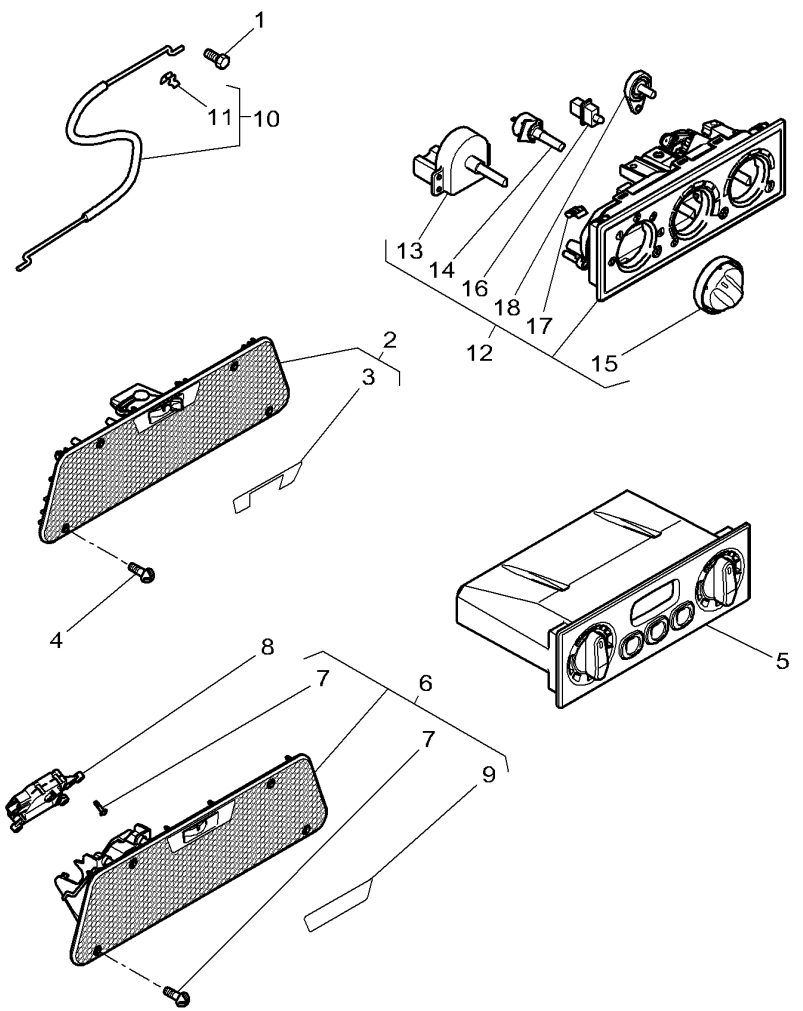

[D] NOT DETAILLED
PAS DETAILLE
NICHT VERKAUFT
PASSO DETTAGLIATO
NO DETALLADO

Front Windscreen Wiper
Essuie Glace Avant
Scheibenwischer Vorderteil
Tergicristallo Anteriore
Varillaje De Limpiaparabrisas Delantero

110-150

1-WU23-020-A

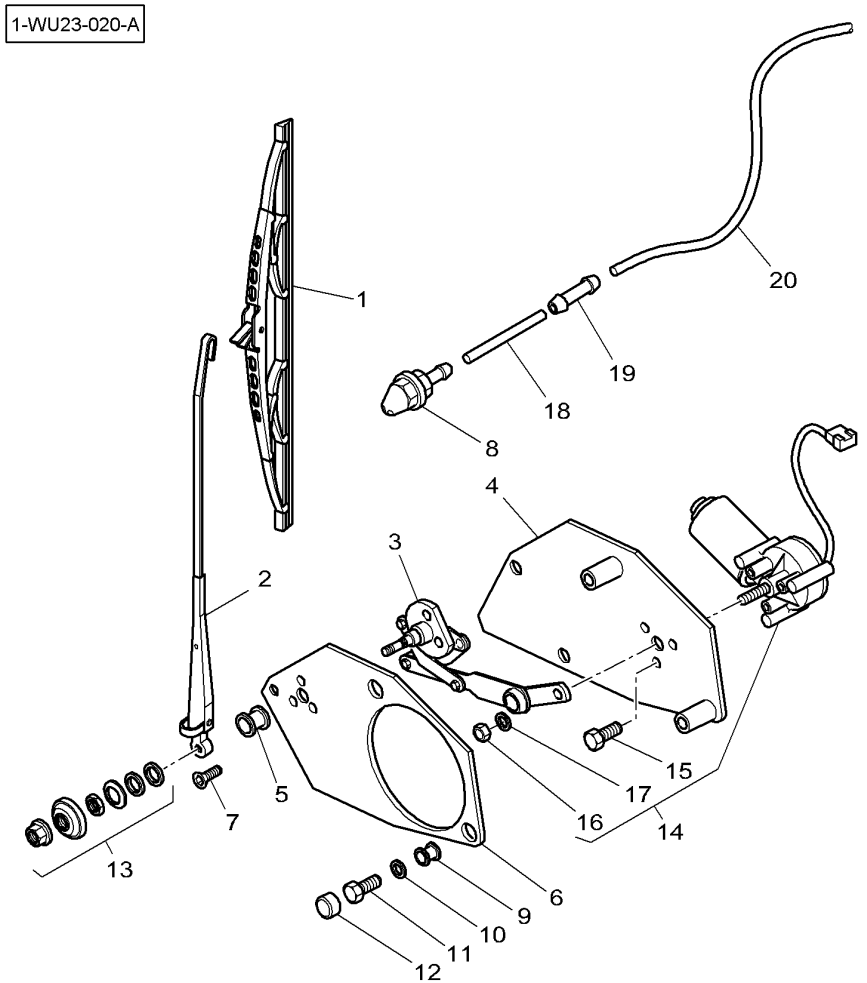

1	**4275053M1**	◀▶ 500 MM	**1**	WIPER BLADE	BALAI ESSUIE GL SPAZZOLA TERGICR	WISCHERBLATT ESCOBILLA L P BR
2	4275054M1	◀▶ 375 MM	**1**	WIPER ARM	BRAS ESSUIE GL BRACCIO TERGICR.	WISCHERARM BRAZO L P BRISA
3	4275056M2		**1**	TIE ROD	TRINGLERIE TIRANTE	ZUGSTANGE BRAZO DE ENLACE
4	3777699M2		**1**	SUPPORT	SUPPORT SOPPORTO	TRAGER SOPORTE
5	4277495M1	∅ 28 MM	**1**	GROMMET	PASSE FIL ANELLO PASSACAVO	GUMMITUELLE PASACABLE
6	3777700M2		**1**	SUPPORT	SUPPORT SOPPORTO	TRAGER SOPORTE
7	3010762X1	M5 X 10	**3**	SCREW	VIS VITE	SCHRAUBE TORNILLO
8	3389664M1		**2**	JET	GICLEUR UGELLO	SPRITZDUESE SURTIDOR
9	4277496M1	∅ 16 MM	**2**	GROMMET	PASSE FIL ANELLO PASSACAVO	GUMMITUELLE PASACABLE
10	391039X1	∅ 8-24 X 2 MM	**2**	FLAT WASHER	RONDELLE PLATE RONDELLE PIANA	UNTERLEGSCHEIBEN ARANDELA PLANA
11	339337X1	M8 X 30	**2**	HEX. SOCK. SCREW	VIS TETE HEX VITE PARKER	ZYLINDERSCHRAUBE TORN.CAB.HUECA
12	3616277M1	M8	**2**	HELMET	CAPUCHON CASCO	SCHUTZHELM CASCO
13	3907533M91		**1**	KIT, HARDWARE	JEUQUINCAILLERIE KIT BULLONERIA	NORMTEILESATZ BULONERIA JUEGO
14	4275055M1		**1**	WIPER MOTOR	MOTEUR ESSUIE GL MOTORINO TERGICR	WISCHERMOTOR MOTOR L PARABRIS
15	339560X1	14 M6 X 16	**3**	HEX. SOCK. SCREW	VIS TETE HEX VITE PARKER	ZYLINDERSCHRAUBE TORN.CAB.HUECA
16	339169X1	14 M8	**1**	NUT	ECROU DADO	MUTTER TUERCA
17	3008914X1	14	**1**	TOOTH WASHER	RONDELLE DENTEE ROSETTA DENTATA	ZAHNSCHEIBE ARANDELA ESTRELL
18	3778372M1	370MM	**1**	TUBE	TUBE TUBO.	ROHR TUBO.
19	3715074M1		**1**	UNION	RACCORD RACCORDO	VERSCHRAUBUNG RACOR
20	3786778M1	[B] ◀▶ 1840 MM	**1**	HOSE FLEXIBLE	TUYAU FLEXIBLE MANICOTTO FLESS.	GUMMISCHLAUCH MANGUERA FLEX
20	3786780M1	◀▶ 1550 MM	**1**	HOSE FLEXIBLE	TUYAU FLEXIBLE MANICOTTO FLESS.	GUMMISCHLAUCH MANGUERA FLEX

[B] WITHOUT REAR WIPER AND WASHER WINDSCREEN
SANS ESSUIE GLACE ET LAVE GLACE ARRIERE
OHNE SCHEIBENWISCHER UND SCHEIBENWASCHANLAGE HINT
SENZA TERGICRISTALLO E LAVAGGIO CRISTALLO POSTERIO RE
SIN LIMPIA Y LAVA VENTANA TRASERA

Windscreen Washer
Lave Glace
Scheibenwascher
Lavacristallo
Lavaparabrisas

110-155

1-WU24-001-C

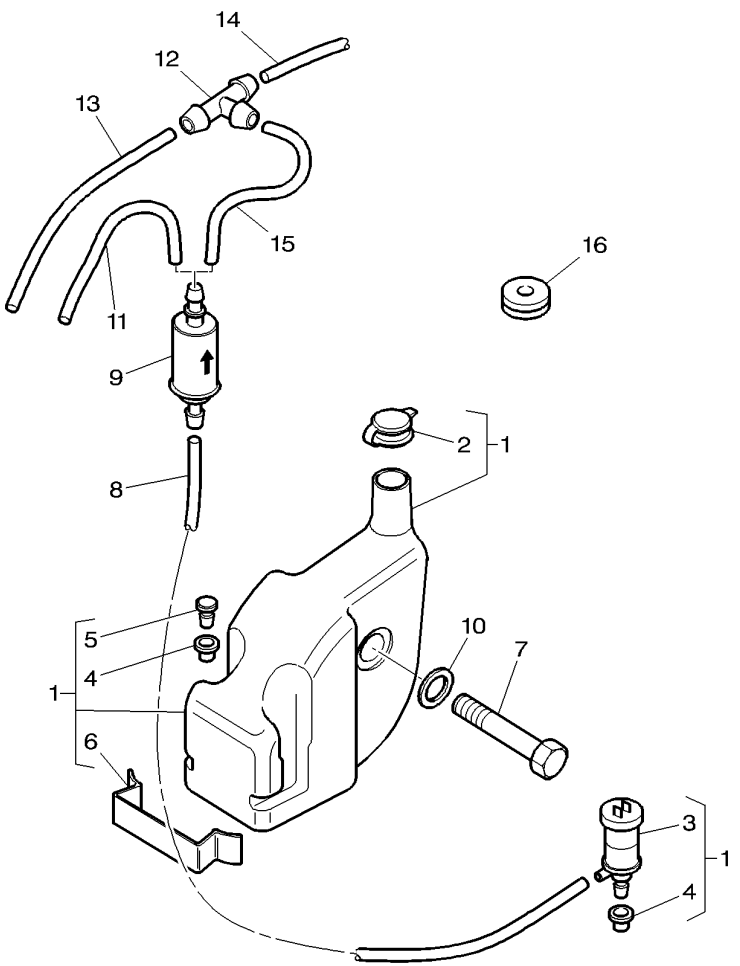

1	3786775M91		**1**	TANK	RESERVOIR SERBATOIO	TANK DEPOSITO
2*	3106496M1	1	**1**	PLUG	BOUCHON TAPPO	STOPFEN TAPON
3	3582441M1	1	**1**	WATER PUMP	POMPE A EAU POMPA ACQUA	WASSERPUMPE BOMBA DE AGUA
4	3582443M1	1	**2**	GASKET	JOINT GIUNTO PIANO	FLACHDICHTUNG JUNTA PLANA
5	3582442M1	1	**1**	PLUG	BOUCHON TAPPO	STOPFEN TAPON
6	4274610M1	1	**1**	CLIP	PATTE D'ATTACHE FERMAGLIO	SCHELLE CLIP
7	339368X1	M8 X 60	**1**	HEX. SOCK. SCREW	VIS TETE HEX VITE PARKER	ZYLINDERSCHRAUBE TORN.CAB.HUECA
8*	3786779M2	◀▶ 1450 mm	**1**	TUBE	TUBE TUBO.	ROHR TUBO.
9	3583086M1		**1**	PRESSURE VALVE	VALVE VALVOLA PRESSION	DRUCKVENTIL VALVULA PRESION
10	3010467X1	∅ 8-30 X 2	**1**	WASHER	RONDELLE RONDELLA	SCHEIBE ARANDELA
11*	3786781M1	[A] ◀▶ 300 mm	**1**	HOSE FLEXIBLE	TUYAU FLEXIBLE MANICOTTO FLESS.	GUMMISCHLAUCH MANGUERA FLEX
12	3583069M1		**1**	TEEPIECE	TE RACCORDO A T	T-STUECK PIEZA EN T
13	3786780M1	◀▶ 1550 mm	**1**	HOSE FLEXIBLE	TUYAU FLEXIBLE MANICOTTO FLESS.	GUMMISCHLAUCH MANGUERA FLEX
14	3786782M1	◀▶ 1580 mm	**1**	HOSE FLEXIBLE	TUYAU FLEXIBLE MANICOTTO FLESS.	GUMMISCHLAUCH MANGUERA FLEX
15	3786781M1	◀▶ 300 mm	**1**	HOSE FLEXIBLE	TUYAU FLEXIBLE MANICOTTO FLESS.	GUMMISCHLAUCH MANGUERA FLEX
16	3714694M1	∅ 7-21 X 1,5	**1**	GROMMET	PASSE FIL ANELLO PASSACAVO	GUMMITUELLE PASACABLE
16	3783677M1	∅ 7-21 X 3	**1**	GROMMET	PASSE FIL ANELLO PASSACAVO	GUMMITUELLE PASACABLE

[A] WITHOUT REAR WIPER AND WASHER WINDSCREEN
SANS ESSUIE GLACE ET LAVE GLACE ARRIERE
OHNE SCHEIBENWISCHER UND SCHEIBENWASCHANLAGE HINT
SENZA TERGICRISTALLO E LAVAGGIO CRISTALLO POSTERIO RE
SIN LIMPIA Y LAVA VENTANA TRASERA

Rear Window Wiper
Essuie Glace Arriere
Hinterscheibenwischer
Tergicristallo Parte Posteriore
Limpiaparabrisas Parte Trasera

110-160

1-WU25-008-A

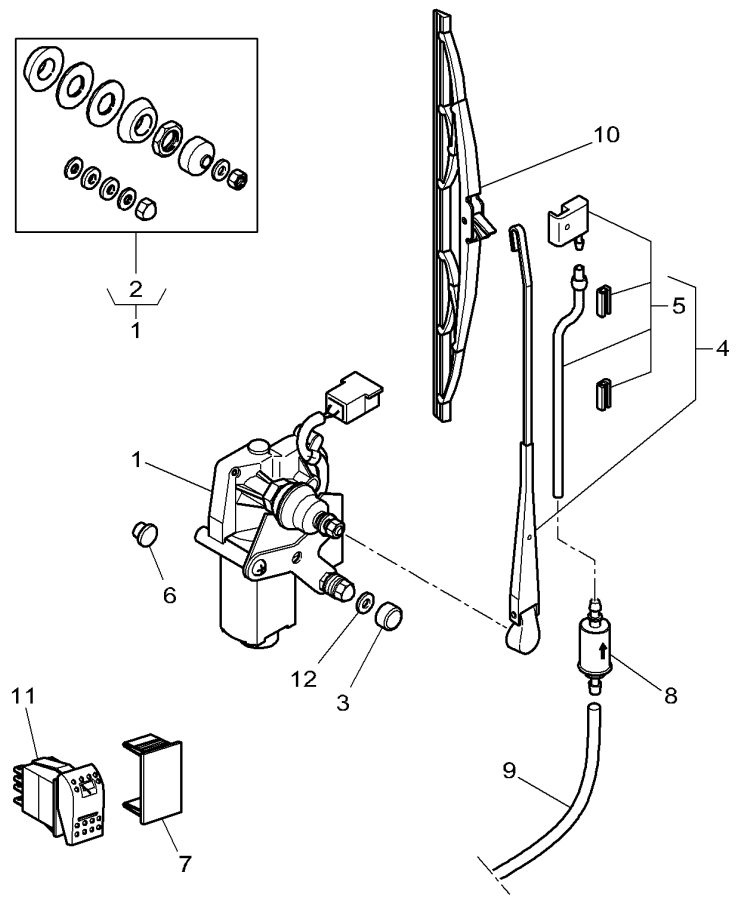

1	4275051M1		**1**	WIPER MOTOR	MOTEUR ESSUIE GL MOTORINO TERGICR	WISCHERMOTOR MOTOR L PARABRIS
2	3907550M91	1	**1**	PARTS PACK	JEU PIECES PACCO RICAMBI	SATZ TEILE PAQUETE PIEZAS
3	3616277M1		**1**	HELMET	CAPUCHON CASCO	SCHUTZHELM CASCO
4	4275050M1	◀▶ 372 MM	**1**	WIPER ARM	BRAS ESSUIE GL BRACCIO TERGICR.	WISCHERARM BRAZO L P BRISA
5	3907575M91	4	**1**	PARTS PACK	JEU PIECES PACCO RICAMBI	SATZ TEILE PAQUETE PIEZAS
6	3713742M1	[B] ∅ 9,5 MM	**1**	PLUG	BOUCHON TAPPO	STOPFEN TAPON
6	3713741M1	[B] ∅ 17,5 MM	**1**	PLUG	BOUCHON TAPPO	STOPFEN TAPON
7	3713151M1	[B]	**1**	TAP	OBTURATEUR. TAPPO*	HAHN GRIFO
8	3583086M1		**1**	PRESSURE VALVE	VALVE VALVOLA PRESSION	DRUCKVENTIL VALVULA PRESION
9	3786782M1	∅ 1580 MM	**1**	HOSE FLEXIBLE	TUYAU FLEXIBLE MANICOTTO FLESS.	GUMMISCHLAUCH MANGUERA FLEX
10	**4275049M1**	◀▶ 450 MM	**1**	WIPER BLADE	BALAI ESSUIE GL SPAZZOLA TERGICR	WISCHERBLATT ESCOBILLA L P BR
11	**4271344M1**		**1**	SWITCH,INDIRECT	CONTACTEUR INTERRUTTORE IND	KONTAKTSCHALTER CONTACTOR
12	4274622M1	[C] ∅ 8 - 20 X 3 MM	**1**	WASHER	RONDELLE RONDELLA	SCHEIBE ARANDELA

[B] WITHOUT REAR WIPER AND WASHER WINDSCREEN
SANS ESSUIE GLACE ET LAVE GLACE ARRIERE
OHNE SCHEIBENWISCHER UND SCHEIBENWASCHANLAGE HINT
SENZA TERGICRISTALLO E LAVAGGIO CRISTALLO POSTERIO RE
SIN LIMPIA Y LAVA VENTANA TRASERA

[C] RUBBER
CAOUTCHOUC
GUMMI
GOMMA
CAUCHO

Canopy
Pare Soleil
Vordach
Tettuccio
Dosel

110-165

Standard Roof
Toit Standard
Standard Dach
Tetto Standard
Tejado Standard

1-WU28-001-C

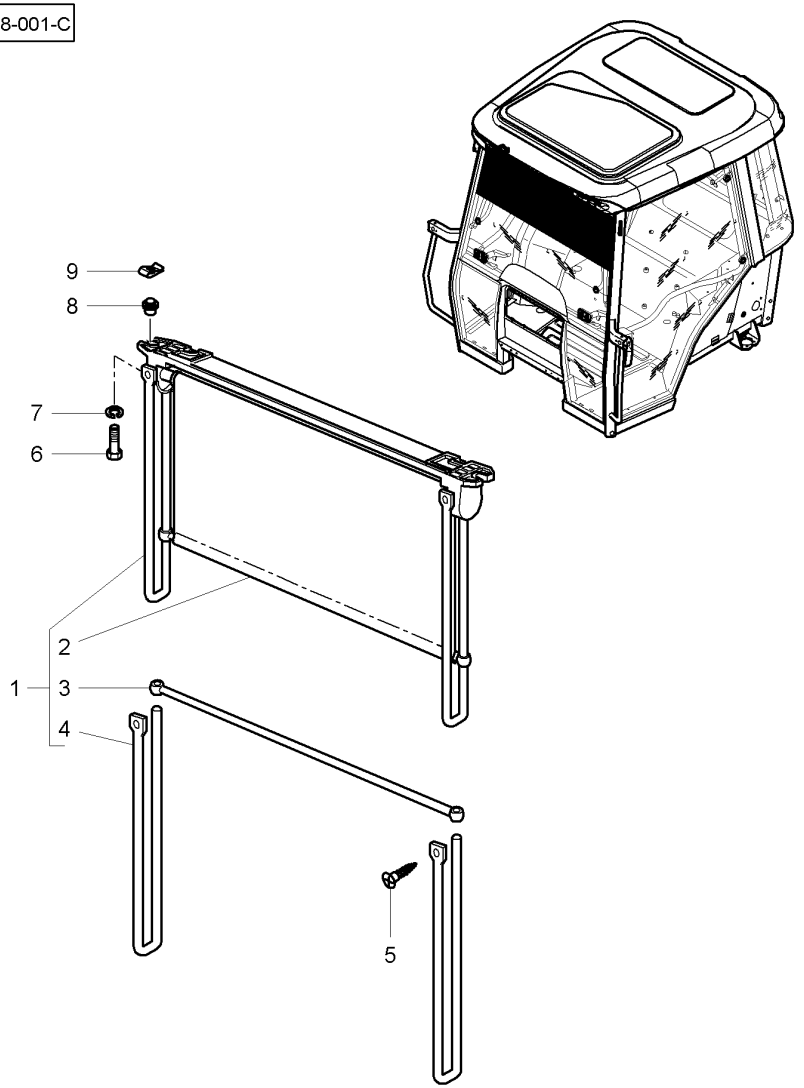

1	3714072M91			**1**	CANOPY	TOIT PARE SOLEIL TETTO RIPARO	SCHUTSDACH TEJADILLO
2	3902176M91	1		**1**	PANEL	PANNEAU PANNELLO	WANDPLATTE PANEL
3	3902175M91	1		**1**	BAR	BARRE BARRA	STAB BARRA
4	3902174M91	1		**2**	ROD	TRINGLE ASTA	STANGE VARILLA
5	365924X1	1	CBZ No 10 X 16	**2**	SELF TAP SCREWS	VIS AUTO TARAUD KITAUTOBLOCCANTE	SCHNEIDSCHRAUBEN TORNILLO CHAPA
6*	1440350X1	➡	P254025 M6 X 20	**2**	SCREW METRIC	VIS METRIQUE VITE METRICA	SCHRAUBE METR TORNILLO METRICO
6*	339804X1	➡	P254026 M6 X 25	**2**	HEX. SOCK. SCREW	VIS TETE HEX VITE PARKER	ZYLINDERSCHRAUBE TORN.CAB.HUECA
7	339375X1			**2**	LOCK WASHER	RONDELLE FREIN RONDELLA ARRESTO	SICHERUNGSRING ARANDELA SEGURID
8*	3580774M1	➡	P254025 M6	**2**	NUT	ECROU DADO	MUTTER TUERCA
9*	3010070X1	➡	P254026 M6	**2**	SPRING NUT	ECROU RESSORT SPRING NUT	FEDERMUTTER TUERCA RESORTE

Radio Installation
Montage Radio
Rundfunk Anbau
Radio Installazione
Radio Instalacion

110-170

1-WU26-011-A

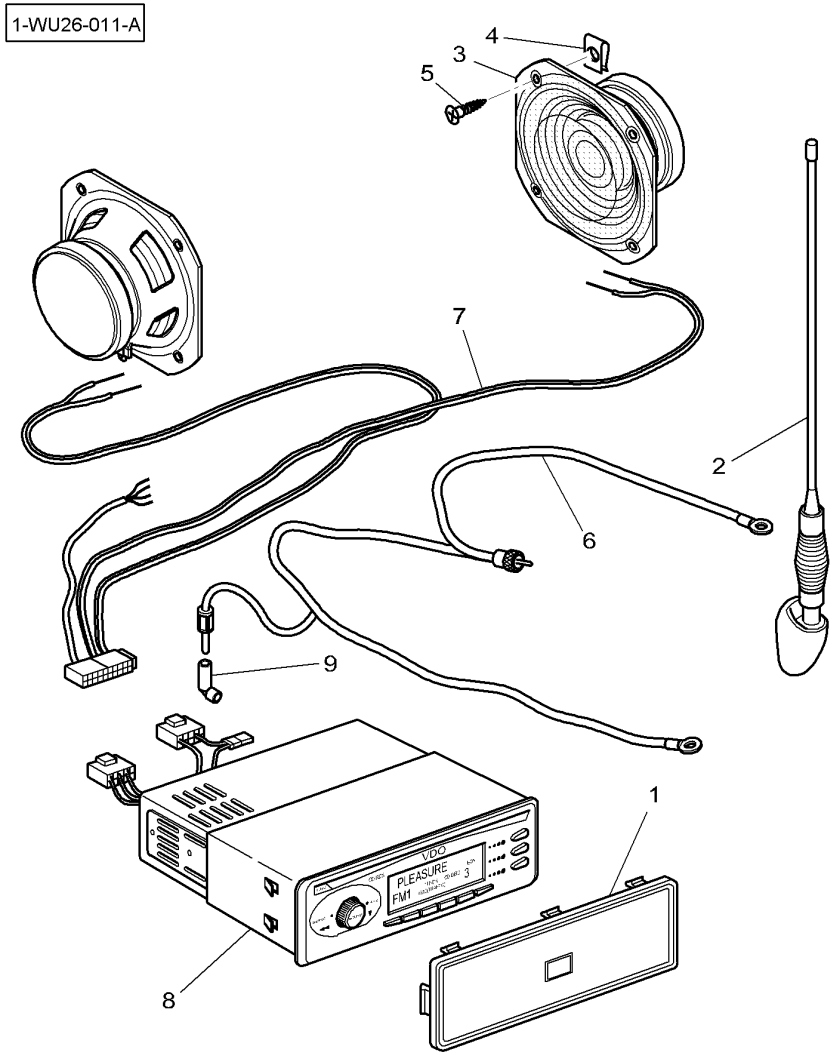

1	3580173M1	[A]	**1**	PLATE	PLAQUE PIASTRA	PLATTE PLATO
2	5017951M91		**1**	ANTENNA	ANTENNE. ANTENNA.	ANTENNE ANTENA
3	4274735M1	●○ 3808855M1	**2**	SPEAKER	HAUT PARLEUR ALTOPARLANTE.	LAUTSPRECHER ALTOVOZ
4	3715142M1	M5	**8**	SPRING NUT	ECROU RESSORT SPRING NUT	FEDERMUTTER TUERCA RESORTE
5	3010506X1	M5 X 16	**8**	SCREW	VIS VITE	SCHRAUBE TORNILLO
6	5017953M1		**1**	CABLE	CABLE CAVO	KABEL CABLE
7*	3786676M3	(EE)	**1**	HARNESS	FAISCEAU FASCIOCAVI	KABELBAUM MAZO CABLES
8*	4285759M91	[B]	**1**	RADIO PUSH BUTT.	RADIO A TOUCHES AUORADIO AUTOM.	DR T MONORADIO RADIO A BOTONES
9*	4290813M1		**1**	ADAPTOR	ADAPTATEUR ADATTATORE	REDUZIERNIPPEL ADAPTADOR

[A] WITHOUT RADIO
SANS RADIO
OHNE RUNDFUNK
SENZA RADIO
SIN RADIO

[B] RADIO / CD
RADIO / CD
RADIO / CD
RADIO / CD
RADIO / CD

Electrical Plug & Cigar Lighter
Prise De Courant & Allume Cigare
Steck & Zigarrenanzuender
Presa Di Corrente & Accedisigari
Enchufe & Encendor De Cigarillos

110-175

Iso Standard
Norme Iso
Iso Normung
Unificazione Iso
Normalizacion Iso

1-WU33-005-A

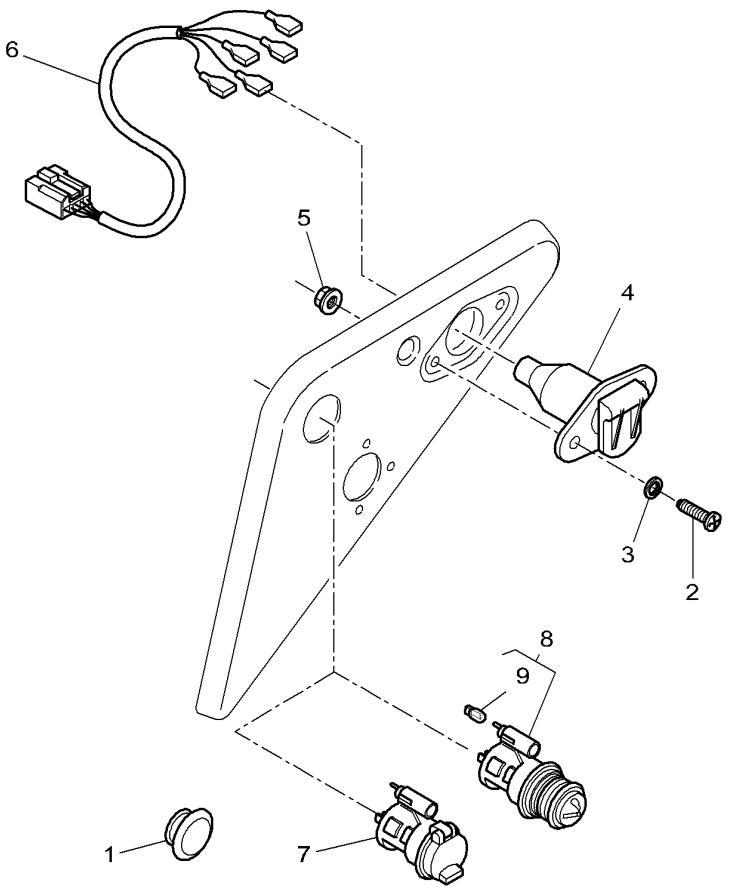

1	4275985M1	∅ 25,4	**1**	TAP	OBTURATEUR. TAPPO*	HAHN GRIFO
2	3010804X1	M4 X 16	**2**	SCREW	VIS VITE	SCHRAUBE TORNILLO
3	3001856X1	∅ 4-12 X 1,1	**2**	WASHER	RONDELLE RONDELLA	SCHEIBE ARANDELA
4	3713127M1	⇒ 3760033M1	**1**	ELECTRIC SOCKET	PRISE ELEC FEMEL PRESAELETTRIC F	STECKDOSE TOMACORRIENTE F
5	1443615X1	M4	**2**	NUT	ECROU DADO	MUTTER TUERCA
6	3714516M2		**1**	HARNESS	FAISCEAU FASCIOCAVI	KABELBAUM MAZO CABLES
7	4272534M1	[B]	**1**	INTAKE	PRISE ASPIRAZIONE	SAUGROHR ENTRADA
8	3617848M91		**1**	LIGHTER	ALLUME CIGARE ACCENDISIGARO	FEUERZEUG ENCENDEDOR
9	**3302213M1**	8	**1**	BULB 12V 1.2W	AMPOULE 12V 1.2W BULBO 12V 1,2W	GLUEHL 12V 1.2W BOMBILLA 12V1,2W

[B] PHONE INTAKE
PRISE TELEPHONE
TELEFON STECKDOSE
PRESA TELEFONO
ENCHUFE TELEFONO

Electrical Plug & Cigar Lighter
Prise De Courant & Allume Cigare
Steck & Zigarrenanzuender
Presa Di Corrente & Accedisigari
Enchufe & Encendor De Cigarillos

110-180

Sae Standard
Norme Sae
Sae Normung
Unificazione Sae
Normalizacion Sae

1-WU33-006-A

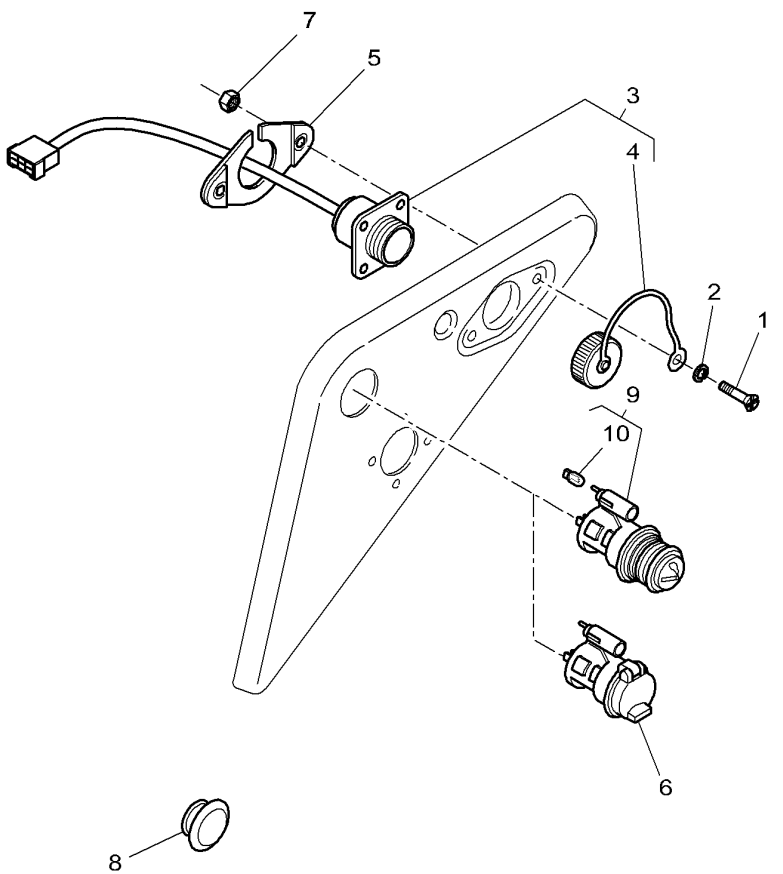

1	3010804X1	M4 X 16	**2**	SCREW	VIS VITE	SCHRAUBE TORNILLO
2	3001856X1	∅ 4-12 X 1,1	**2**	WASHER	RONDELLE RONDELLA	SCHEIBE ARANDELA
3*	3786495M3		**1**	INTAKE	PRISE ASPIRAZIONE	SAUGROHR ENTRADA
4	3900383M1	3	**1**	PLUG	BOUCHON TAPPO	STOPFEN TAPON
5	4273771M2		**1**	PLATE	PLAQUE PIASTRA	PLATTE PLATO
6	4272534M1	[B]	**1**	INTAKE	PRISE ASPIRAZIONE	SAUGROHR ENTRADA
7	1443615X1	M4	**2**	NUT	ECROU DADO	MUTTER TUERCA
8	4275985M1	∅ 25,4-32 mm	**1**	TAP	OBTURATEUR. TAPPO*	HAHN GRIFO
9	3617848M91		**1**	LIGHTER	ALLUME CIGARE ACCENDISIGARO	FEUERZEUG ENCENDEDOR
10	**3302213M1**	9	**1**	BULB 12V 1.2W	AMPOULE 12V 1.2W BULBO 12V 1,2W	GLUEHL 12V 1.2W BOMBILLA 12V1,2W

[B] PHONE INTAKE
PRISE TELEPHONE
TELEFON STECKDOSE
PRESA TELEFONO
ENCHUFE TELEFONO

Electrical Plug & Cigar Lighter
Prise De Courant & Allume Cigare
Steck & Zigarrenanzuender
Presa Di Corrente & Accedisigari
Enchufe & Encendor De Cigarillos

110-185

Iso Standard
Norme Iso
Iso Normung
Unificazione Iso
Normalizacion Iso

1-WU33-007-A

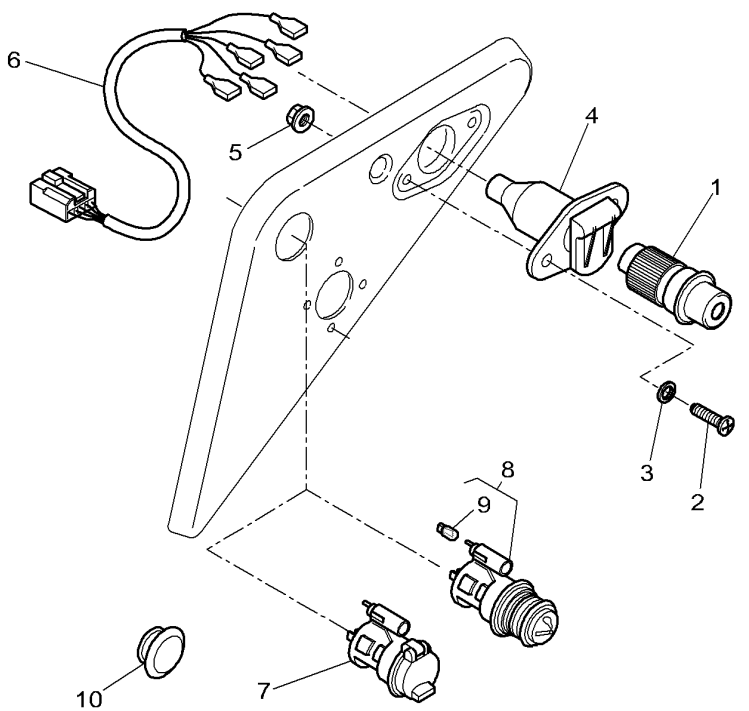

1	**G205900900020**		**1**	ELECTRICAL PLUG	PRISE ELECT MALE PRESAELETTRICI M	STECKER TOMACORRIENTE M
2	3010804X1	M4 X 16	**2**	SCREW	VIS VITE	SCHRAUBE TORNILLO
3	3001856X1	∅ 4-12 X 1,1	**2**	WASHER	RONDELLE RONDELLA	SCHEIBE ARANDELA
4	3713127M1	⇒ 3760033M1	**1**	ELECTRIC SOCKET	PRISE ELEC FEMEL PRESAELETTRIC F	STECKDOSE TOMACORRIENTE F
5	1443615X1	M4	**2**	NUT	ECROU DADO	MUTTER TUERCA
6	3714516M2		**1**	HARNESS	FAISCEAU FASCIOCAVI	KABELBAUM MAZO CABLES
7	4272534M1	[B]	**1**	INTAKE	PRISE ASPIRAZIONE	SAUGROHR ENTRADA
8	3617848M91		**1**	LIGHTER	ALLUME CIGARE ACCENDISIGARO	FEUERZEUG ENCENDEDOR
9	**3302213M1**	8	**1**	BULB 12V 1.2W	AMPOULE 12V 1.2W BULBO 12V 1,2W	GLUEHL 12V 1.2W BOMBILLA 12V1,2W
10	4275985M1	∅ 25,4	**1**	TAP	OBTURATEUR. TAPPO*	HAHN GRIFO

[B] PHONE INTAKE
PRISE TELEPHONE
TELEFON STECKDOSE
PRESA TELEFONO
ENCHUFE TELEFONO

Internal Mirrors
Retroviseurs Interieurs
Innerruckspiegel
Retrovisore Interior
Retrovisor Interior

110-190

1-WU30-004-A

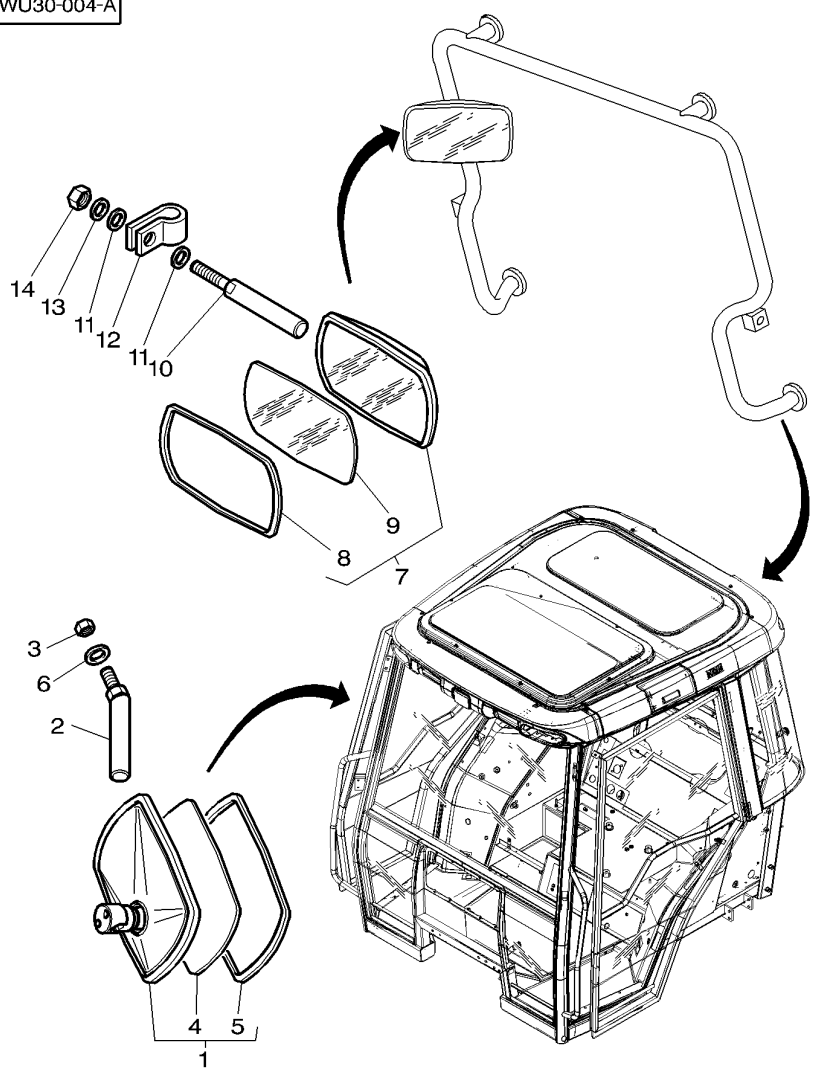

1	3806618M91		**1**	MIRROR	RETROVISEUR SPECCHIETTO	RUECKSPIEGEL ESPEJO
2	3778091M1		**1**	CLEVIS PIN	AXE PERNO D'ATTACCO	SPLINTBOLZEN BULON CILINDRICO
3	339402X1	M10	**1**	NUT SPECIAL	ECROU SPECIAL DADO SPECIALE	SPEZIALMUTTER TUERCA ESPECIAL
4	3904487M1	1	**1**	MIRROR GLASS	GLACE RETRO VETRO SPECCHIO	SPIEGELGLAS LUNA DE ESPEJO
5	3904491M1	1	**1**	GASKET	JOINT GIUNTO PIANO	FLACHDICHTUNG JUNTA PLANA
6	390734X1		**1**	FLAT WASHER	RONDELLE PLATE RONDELLE PIANA	UNTERLEGSCHEIBEN ARANDELA PLANA
7	3806618M91		**1**	MIRROR	RETROVISEUR SPECCHIETTO	RUECKSPIEGEL ESPEJO
8	3904491M1	7	**1**	GASKET	JOINT GIUNTO PIANO	FLACHDICHTUNG JUNTA PLANA
9	3904487M1	7	**1**	MIRROR GLASS	GLACE RETRO VETRO SPECCHIO	SPIEGELGLAS LUNA DE ESPEJO
10	3581239M1		**1**	CLEVIS PIN	AXE PERNO D'ATTACCO	SPLINTBOLZEN BULON CILINDRICO
11	385362X1	∅ 10-20 X 3	**2**	WASHER	RONDELLE RONDELLA	SCHEIBE ARANDELA
12	3581507M1	∅ 18 - M10	**1**	CLIP	PATTE D'ATTACHE FERMAGLIO	SCHELLE CLIP
13	391026X1	∅ 10-18	**1**	TOOTH WASHER	RONDELLE DENTEE ROSETTA DENTATA	ZAHNSCHEIBE ARANDELA ESTRELL
14	339402X1	M10	**1**	NUT SPECIAL	ECROU SPECIAL DADO SPECIALE	SPEZIALMUTTER TUERCA ESPECIAL

External Mirrors
Retroviseurs Exterieurs
Asserruckspiegel
Retrovisore
Retrovisor

110-195

1-WU29-001-A

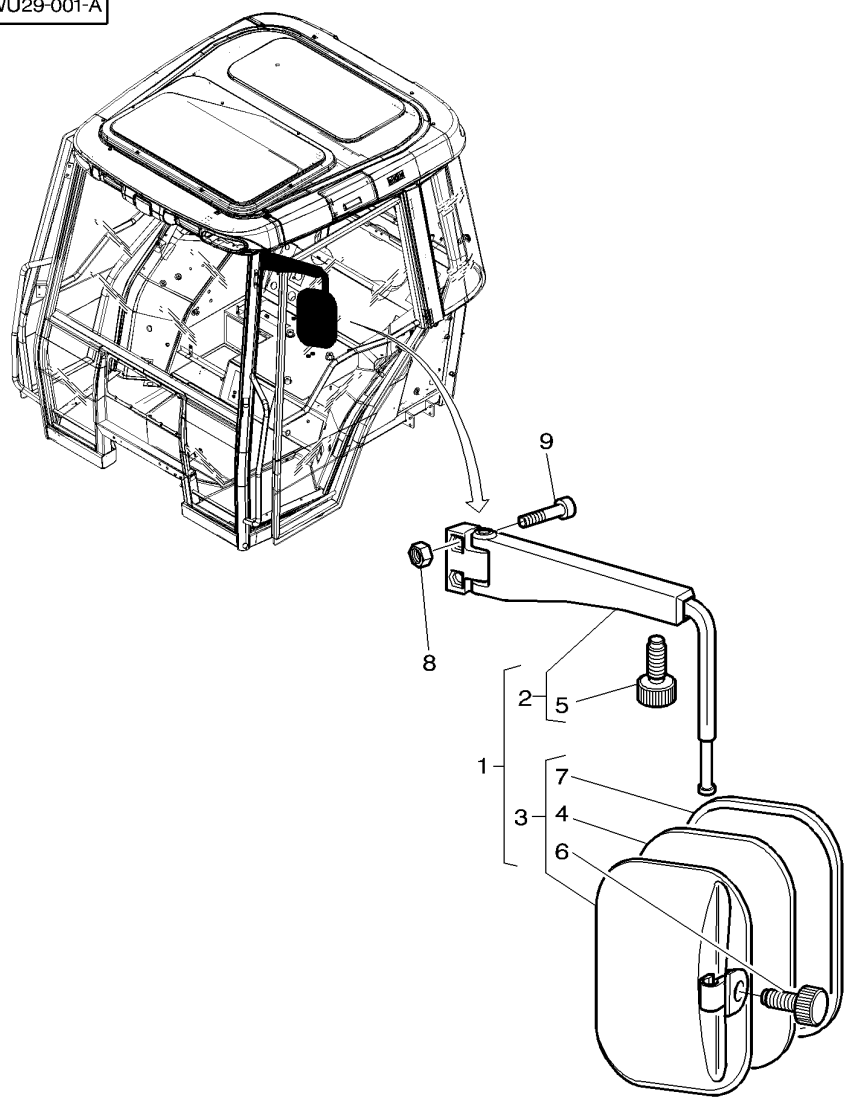

1	3787146M91	◀	**1**	MIRROR	RETROVISEUR SPECCHIETTO	RUECKSPIEGEL ESPEJO
1	3787147M91	▶	**1**	MIRROR	RETROVISEUR SPECCHIETTO	RUECKSPIEGEL ESPEJO
2	3787145M91	1	**1**	ARM	BRAS BRACCIO	SCHARHEBEL BRAZO
3	3787152M1	1	**1**	MIRROR	RETROVISEUR SPECCHIETTO	RUECKSPIEGEL ESPEJO
4	3904488M1	3	**1**	MIRROR GLASS	GLACE RETRO VETRO SPECCHIO	SPIEGELGLAS LUNA DE ESPEJO
5	3907103M1	2	**1**	SETSCREW	VIS DE BLOCAGE INSIEME VITI	STELLSCHRAUBE SET SCREW
6	3907108M1	3	**1**	SETSCREW	VIS DE BLOCAGE INSIEME VITI	STELLSCHRAUBE SET SCREW
7	3907109M1	3	**1**	GASKET	JOINT GIUNTO PIANO	FLACHDICHTUNG JUNTA PLANA
8	1440329X1	M10	**4**	LOCKNUT	ECROU FREIN AUTOBLOCCANTE	SICHERUNGSMUTTER CONTRATUERCA
9	3011368X1	M10 X 30	**4**	SCREW	VIS VITE	SCHRAUBE TORNILLO

Electric Control Rear Reflecting Miror
Retroviseur A Commande Electrique
Ruckspiegel Mit Elektrische Schaltung
Retrovisore A Comando Elettrico
Retrovisor Con Mando Electrico

110-200

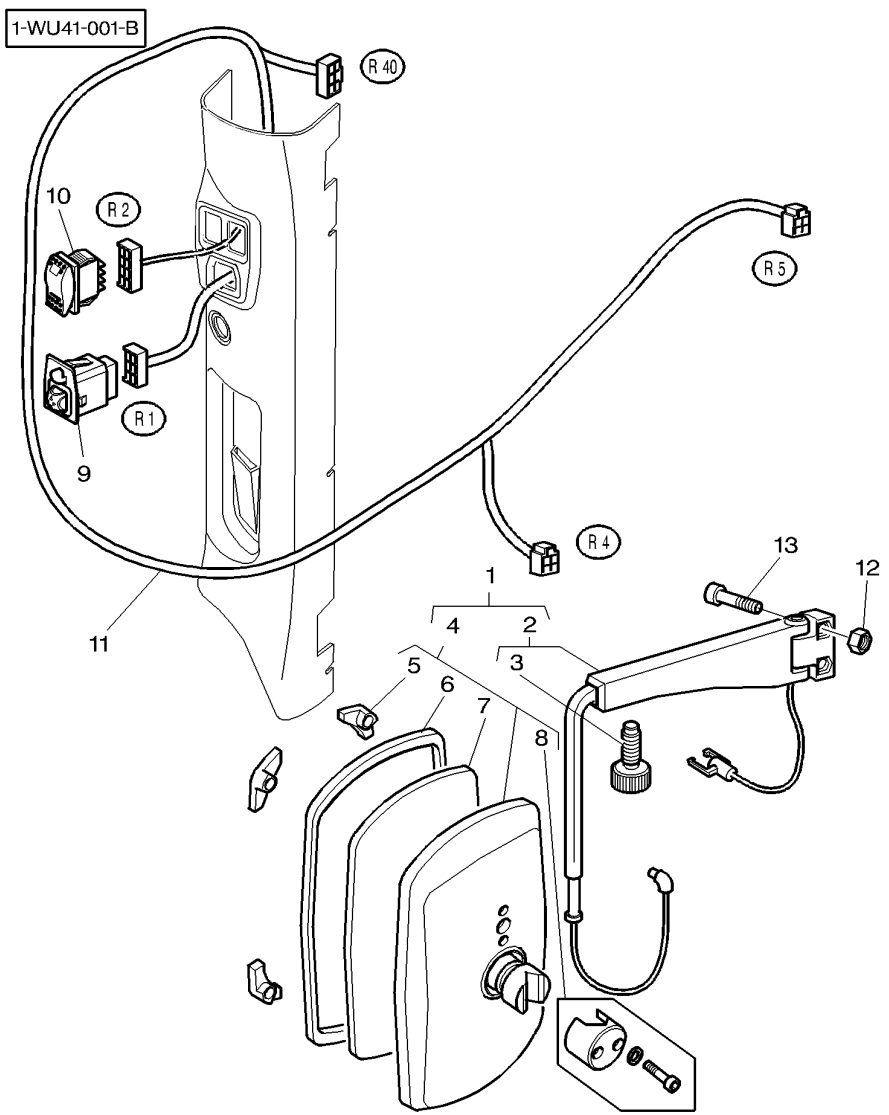

1	3787154M91	◀	**1**	MIRROR	RETROVISEUR SPECCHIETTO	RUECKSPIEGEL ESPEJO
1	3787155M91	▶	**1**	MIRROR	RETROVISEUR SPECCHIETTO	RUECKSPIEGEL ESPEJO
2	3787156M91	1	**1**	ARM	BRAS BRACCIO	SCHARHEBEL BRAZO
3	3907103M1	2	**1**	SETSCREW	VIS DE BLOCAGE INSIEME VITI	STELLSCHRAUBE SET SCREW
4	3787157M1	1	**1**	MIRROR	RETROVISEUR SPECCHIETTO	RUECKSPIEGEL ESPEJO
5	3904493M1	4	**4**	GUSSET	GOUSSET FAZZOLETTO	KNOTENBLECH CARTELA
6	3904492M1	4	**1**	GASKET	JOINT GIUNTO PIANO	FLACHDICHTUNG JUNTA PLANA
7	3907104M1	4	**1**	MIRROR GLASS	GLACE RETRO VETRO SPECCHIO	SPIEGELGLAS LUNA DE ESPEJO
8	3907102M91	4	**1**	PARTS PACK	JEU PIECES PACCO RICAMBI	SATZ TEILE PAQUETE PIEZAS
9	4270273M1		**1**	DRIVE	COMMANDE PRESA DI MOTO	ANTRIEB TRASMISION
10	4271345M1		**1**	SWITCH,INDIRECT	CONTACTEUR INTERRUTTORE IND	KONTAKTSCHALTER CONTACTOR
11	4271865M2		**1**	HARNESS	FAISCEAU FASCIOCAVI	KABELBAUM MAZO CABLES
12	1440329X1	M10	**4**	LOCKNUT	ECROU FREIN AUTOBLOCCANTE	SICHERUNGSMUTTER CONTRATUERCA
13	3011368X1	M10 X 30	**4**	SCREW	VIS VITE	SCHRAUBE TORNILLO

Seat
Siege
Fahrersitz
Sedile
Asiento

110-205

1-WV01-023-A

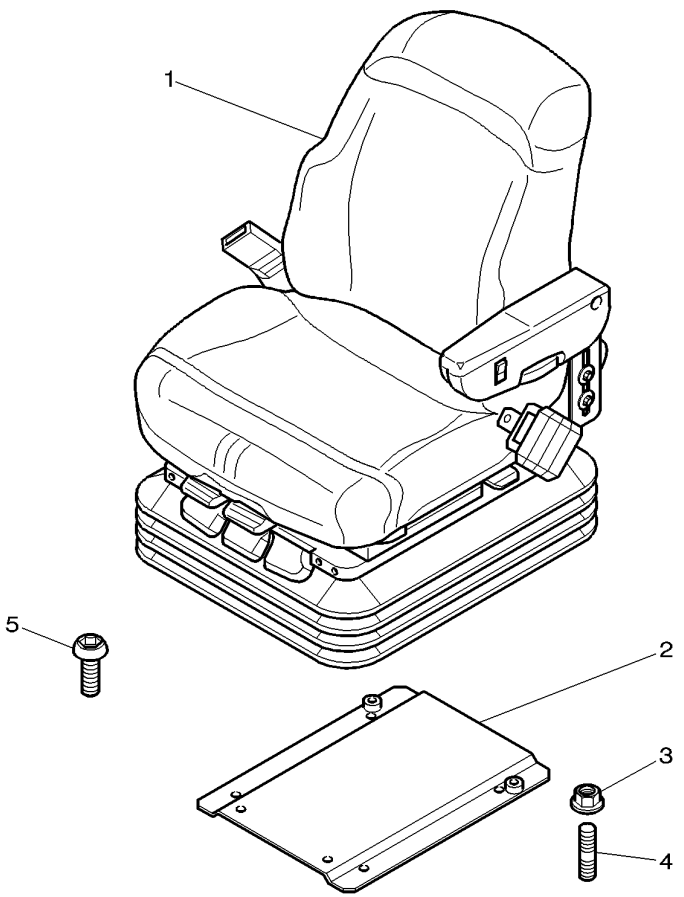

1*	4275226M93	[A]	**1**	SEAT	SIEGE SEDILE	SITZ ASIENTO
2	4275637M2		**1**	PLATE	PLAQUE PIASTRA	PLATTE PLATO
3	3019124X1		**2**	NUT	ECROU DADO	MUTTER TUERCA
4	391053X1	M8X16	**2**	STUD	GOUJON SPINOTTO FILETT.	STEHBOLZEN ESPARRAGO ROSCA.
5	3010872X1	M8X16	**2**	SCREW	VIS VITE	SCHRAUBE TORNILLO
5	3010909X1	M8X20	**4**	SCREW	VIS VITE	SCHRAUBE TORNILLO

[A] DETAILS TO BE ADVISED
DETAIL COMMUNIQUE ULTERIEUREMENT
EINZELNE WIRD BEKANNTGEGEBEN
DA AVVISARE PER PARTICOLARI
AVISAR PARA DETAILLE

Seat
Siege
Fahrersitz
Sedile
Asiento

110-210

1-WV01-024-A

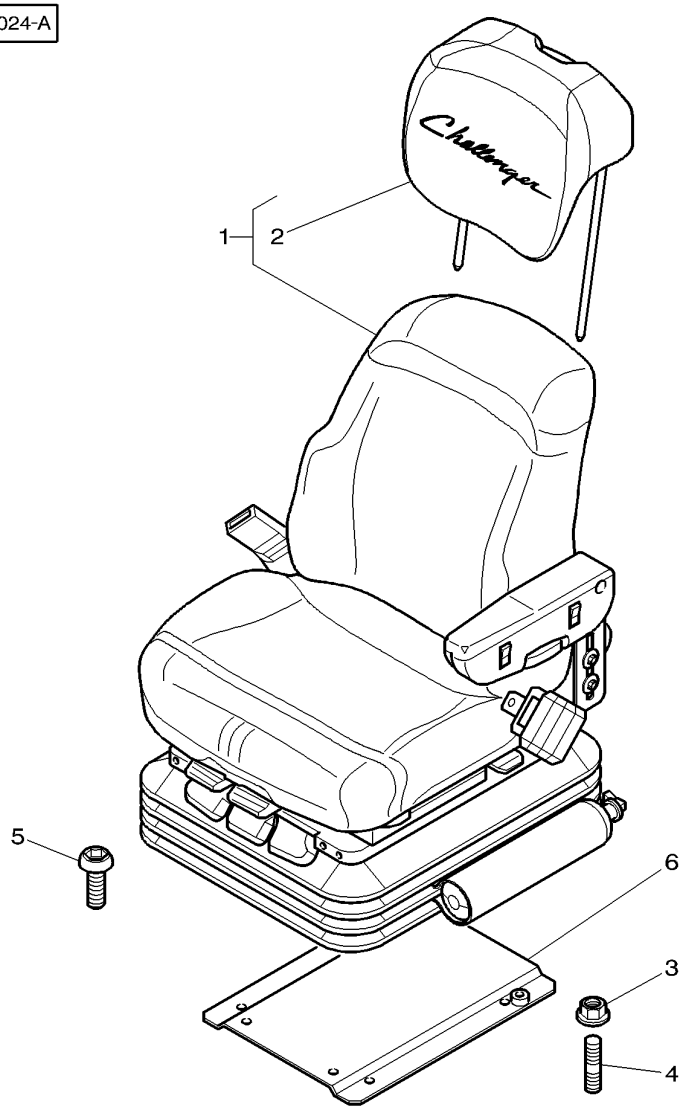

1*	4275966M93	[B]	**1**	SEAT	SIEGE SEDILE	SITZ ASIENTO
2		1 [A]	**1**	HEAD REST	APPUI-TETE POGGIA TESTA	KOPFSTUETZE APOYA CABEZA
3	3019124X1		**2**	NUT	ECROU DADO	MUTTER TUERCA
4	391053X1	M8X16	**2**	STUD	GOUJON SPINOTTO FILETT.	STEHBOLZEN ESPARRAGO ROSCA.
5	3010872X1	M8X16	**2**	SCREW	VIS VITE	SCHRAUBE TORNILLO
5	3010909X1	M8X20	**4**	SCREW	VIS VITE	SCHRAUBE TORNILLO
6	4275637M2		**1**	PLATE	PLAQUE PIASTRA	PLATTE PLATO

[A] NUMBER TO BE ADVISED
NUMERO COMMUNIQUE ULTERIEUREMENT
NUMMER WIRD BEKANNTGEGEBEN
NUMERO DA AVUISARE
NUMERO AVISAR

[B] DETAILS TO BE ADVISED
DETAIL COMMUNIQUE ULTERIEUREMENT
EINZELNE WIRD BEKANNTGEGEBEN
DA AVVISARE PER PARTICOLARI
AVISAR PARA DETAILLE

Seat
Siege
Fahrersitz
Sedile
Asiento

110-215

1-WV01-002-B

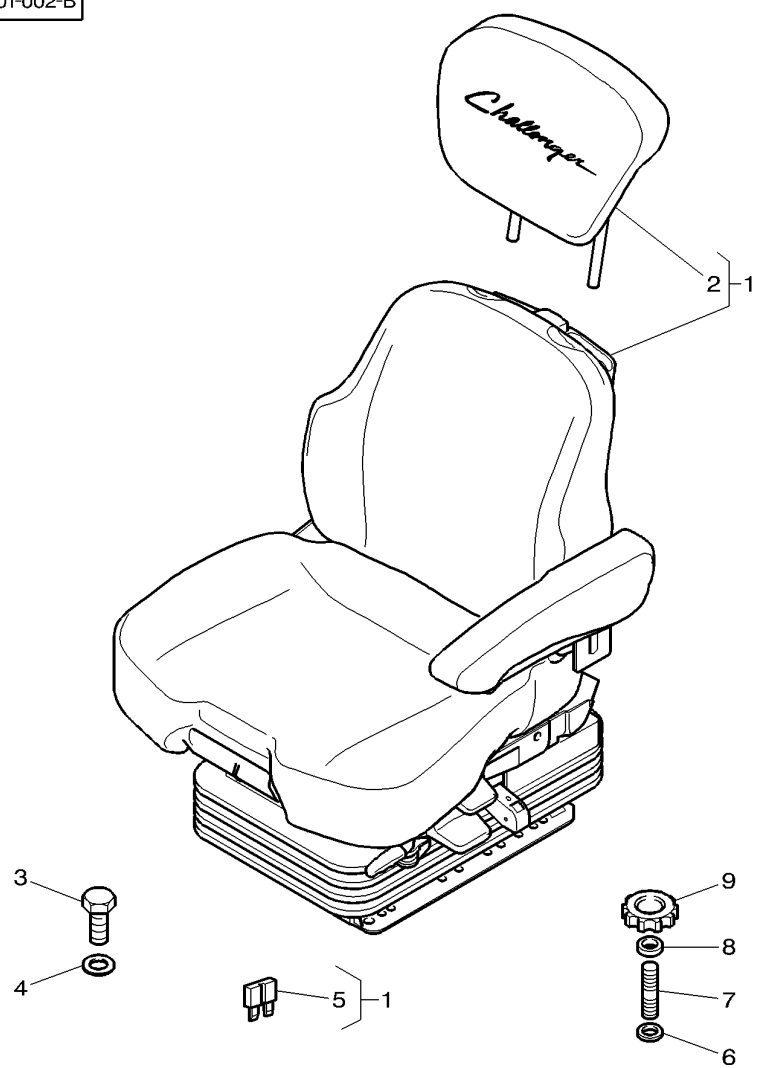

1*	4272523M94	[A] 110-230 No 110-235 No	**1**	SEAT	SIEGE SEDILE	SITZ ASIENTO
1*	4272519M94	[B] 110-220 No 110-225 No	**1**	SEAT	SIEGE SEDILE	SITZ ASIENTO
2	4272612M92	1	**1**	HEAD REST	APPUI-TETE POGGIA TESTA	KOPFSTUETZE APOYA CABEZA
3	3009285X1	M8X16	**4**	SCREW	VIS VITE	SCHRAUBE TORNILLO
4	390972X1		**4**	FLAT WASHER	RONDELLE PLATE RONDELLE PIANA	UNTERLEGSCHEIBEN ARANDELA PLANA
5	**3387322M1**	1 [A] 25 AMP.	**1**	FUSE	FUSIBLE FUSIBILE	SICHERUNG FUSIBLE
6	3778519M1	∅ 10-27X1,8	**2**	WASHER	RONDELLE RONDELLA	SCHEIBE ARANDELA
7	3008483X1	M10X35	**2**	STUD	GOUJON SPINOTTO FILETT.	STEHBOLZEN ESPARRAGO ROSCA.
8	3619096M1	∅ 10,5-35X5	**2**	WASHER	RONDELLE RONDELLA	SCHEIBE ARANDELA
9	3786216M1		**2**	BUTTON	BOUTON BOTTONE	KNOPFTASTE BOTON

[A] AIR PRESSURE SEAT WITH AUTOMATIC ADJUSTMENT - LUXUY
SIEGE PNEUMATIQUE AVEC REGLAGE AUTOMATIQUE - DE LUXE
LUFTPOLSTERUNGSITZ MIT AUTOMATISCHEINSTELLUNG - LUXUS
SEDILE PNEUMATICO CON AGGIUSTATORE AUTOMATICO - LUSSO
ASIENTO PNEUMATICO CON AJUSTE AUTOMATICO - LUJO

[B] AIR PRESSURE SEAT WITH MANUAL ADJUSTMENT
SIEGE PNEUMATIQUE AVEC REGLAGE MANUEL
LUFTPOLSTERUNGSITZ MIT HANDSCHALTEINSTELLUNG
SEDILE PNEUMATICO CON AGGIUSTATORE MANUALE
ASIENTO PNEUMATICO CON AJUSTE MANUAL

Seat
Siege
Fahrersitz
Sedile
Asiento

110-220

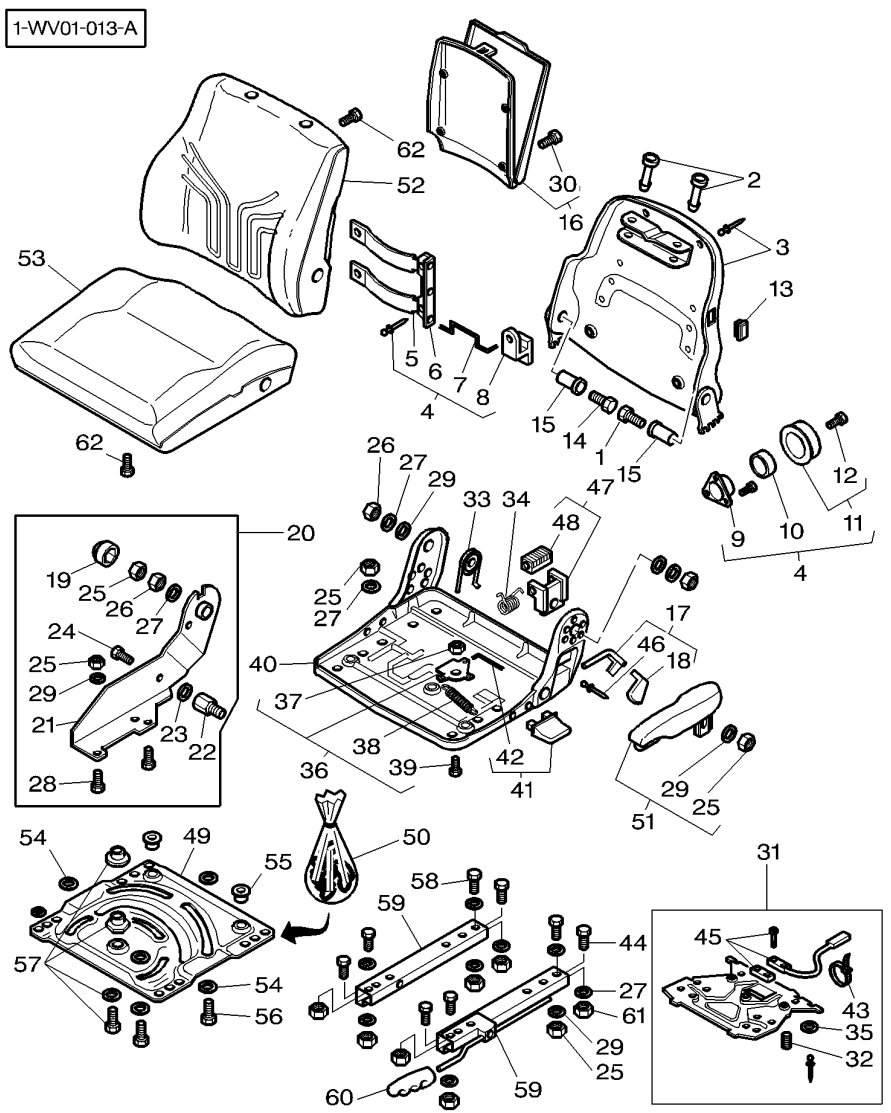

0*	4272519M94		1	SEAT	SIEGE SEDILE	SITZ ASIENTO
1	339010X1	M8X40	1	HEX. SOCK. SCREW	VIS TETE HEX VITE PARKER	ZYLINDERSCHRAUBE TORN.CAB.HUECA
2	F716501030510		2	GUIDE SLEEVE	MANCHON GUIDE MANICOTTO GUIDA	FUEHRUNGSHUELSE MANGUITO GUIA
3	F248500033130		1	BACK PART	PARTIE DORSALE BACK PART	RUECKENTEIL BACK PART
4	F716501030400		1	LUMBAR SUPPORT	SUPPORT LOMBAIRE LUMBAR SUPPORT	LENDENSTUETZE LUMBAR SUPPORT
5	F716501030480		2	PLATE	PLAQUE PIASTRA	PLATTE PLATO
6	F716501030470		1	ANGLE.	EQUERRE. ANGOLO	WINKEL ANGULO
7	F716501030460		1	LINKAGE	ARTICULATION TIRANTERIA	GESTAENGE VARILLAJE
8	F716501030450		1	DRIVING	ENTRAINEUR CONDUCENTE	MITNEHMER DE MANDO
9	3903632M1		1	HOLDER	PIECE SUPPORT SUPPORTO DI BASE	HALTER SUJETADOR
10	3903631M1		1	CAM	CAME CAMMA	NOCKEN LEVA
11	F716501030410		1	HANDLE	MANCHE IMPUGNATURA	GRIFF EMPUNADURA
12	392831X1	M6 X 10	1	SCREW	VIS VITE	SCHRAUBE TORNILLO
13	F248500033030		1	COVERING	TOLE PROTECTION COVERING	ABDECKUNG COVERING
14	339168X1	M8 X 50	1	HEX. SOCK. SCREW	VIS TETE HEX VITE PARKER	ZYLINDERSCHRAUBE TORN.CAB.HUECA
15	3903634M1		2	TUBE	TUBE TUBO.	ROHR TUBO.
16	G515500030100		1	POCKET	POCHE SACCA	TASCHE BOLSA
17	F716501030290	⇔ 3904264M1	1	LEVER	LEVIER LEVA	HEBEL PALANCA
18	F716501030300	⇔ 3904265M1	1	HANDLE	MANCHE IMPUGNATURA	GRIFF EMPUNADURA
19	3903607M1		1	CLEVIS	CHAPE GANCIO D'ATTACCO	GABELSTUECK GANCHO SEGURI.
20	3907123M92		1	SUPPORT	SUPPORT SOPPORTO	TRAGER SOPORTE
21		▰ REF. 20	1	SUPPORT	SUPPORT SOPPORTO	TRAGER SOPORTE
22	3907121M1		1	BOLT	BOULON BULLONE	BOLZEN BULON
23	3903605M1		1	INSERT	DOUILLE INSERTO	EINSATZSTUECK INSERCION
24	353557X1	7/16-20 X 20	1	BOLT UNF	BOULON UNF BULLONE UNF	MASCH.SCHRB.UNF PERNO UNF
25	339169X1	M8	X	NUT	ECROU DADO	MUTTER TUERCA

Seat
Siege
Fahrersitz
Sedile
Asiento

110-220

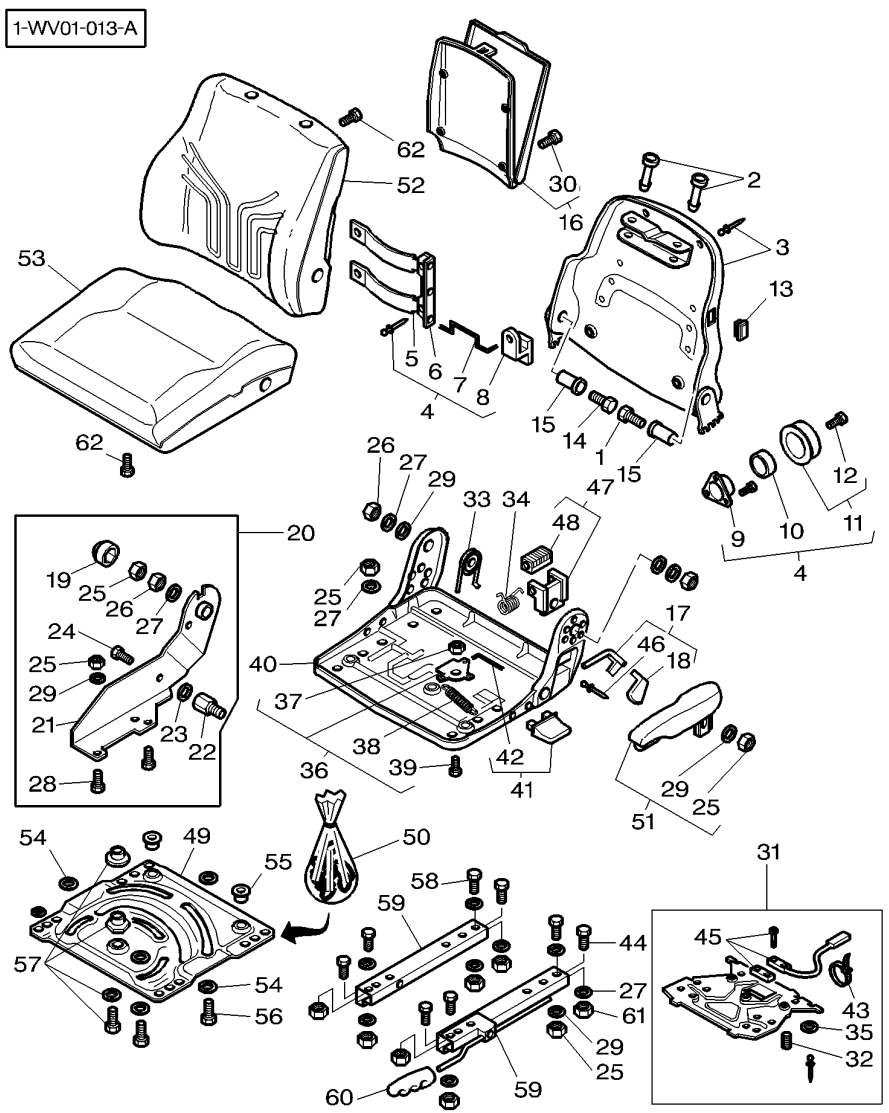

26	3000193X1	M8	**2**	NUT	ECROU DADO	MUTTER TUERCA
27	391565X1	M8	**X**	WASHER METRIC	RONDELLE METR. RONDELLA METRICO	SCHEIBE METRISCH ARANDELA METRICO
28	3009439X1	M8 X 16	**2**	SCREW	VIS VITE	SCHRAUBE TORNILLO
29	391039X1	M8	**X**	FLAT WASHER	RONDELLE PLATE RONDELLE PIANA	UNTERLEGSCHEIBEN ARANDELA PLANA
30	3903093M1	M4X8	**5**	SCREW	VIS VITE	SCHRAUBE TORNILLO
31	3907126M91		**1**	TIMING DEVICE	SYSTEME REGLAGE SINCRONIZZATORE.	EINST.-HINWEIS DISPOS DISTRIB
32	3907124M1		**1**	SPRING	RESSORT MOLLA	FEDER MUELLE
33	F248500033060		**1**	SPRING	RESSORT MOLLA	FEDER MUELLE
34	3903788M1		**1**	SPRING	RESSORT MOLLA	FEDER MUELLE
35	3102401M1		**2**	BUFFER	BUTOIR RESPINGENTE	PUFFER PARACHOQUES
36	F716501030090		**1**	LEVER	LEVIER LEVA	HEBEL PALANCA
37	F716501030100		**1**	RING	ANNEAU ANELLO	RING. ANILLO
38	F198500030270	⇔ 3104902M1	**1**	TENSION SPRING	RESSORT TRACTION MOLLA TENDITRICE	ZUGFEDER MUELLE TENSION
39	339228X1	M8 X 12	**1**	HEX. SOCK. SCREW	VIS TETE HEX VITE PARKER	ZYLINDERSCHRAUBE TORN.CAB.HUECA
40	3907122M1		**1**	FRAME	BATI TELAIO	RAHMEN BASTIDOR
41	F716501030120		**1**	HANDLE	MANCHE IMPUGNATURA	GRIFF EMPUNADURA
42	F716501030110		**1**	LINKAGE	ARTICULATION TIRANTERIA	GESTAENGE VARILLAJE
43	3903106M1		**1**	TIE	ATTACHE TRAVERSA ATTACCO	ANBINDUNG BARRA DE ENLACE
44	3009285X1	M8 X 16 ⇒ 1441000X1	**5**	SCREW	VIS VITE	SCHRAUBE TORNILLO
45	3907125M91		**1**	SWITCH	INTERRUPTEUR INTERRUTTORE	SCHALTER INTERRUPTOR
46		[A]	**X**	RIVET	RIVET RIVETTO	NIET REMACHE
47	F716501030280	⇔ 3904270M1	**1**	SUPPORT	SUPPORT SOPPORTO	TRAGER SOPORTE
48	F411501030010	⇔ 3904269M1	**1**	EXCLUDER	EXTRACTEUR ESCLUSORE	SPERRE ELIMINADOR
49	F716501030070		**1**	TURNTABLE	TABLE TOURNANTE TAVOLA ROTANTE	DREHTISCH PLACA GIRATORIA
50*	3904275M1	[B]	**1**	PARTS PACK	JEU PIECES PACCO RICAMBI	SATZ TEILE PAQUETE PIEZAS
51	3904442M91	◀	**1**	ARMREST	ACCOUDOIR BRACCIOLO	ARMLEHNE APOYABRAZOS

Seat
Siege
Fahrersitz
Sedile
Asiento

110-220

1-WV01-013-A

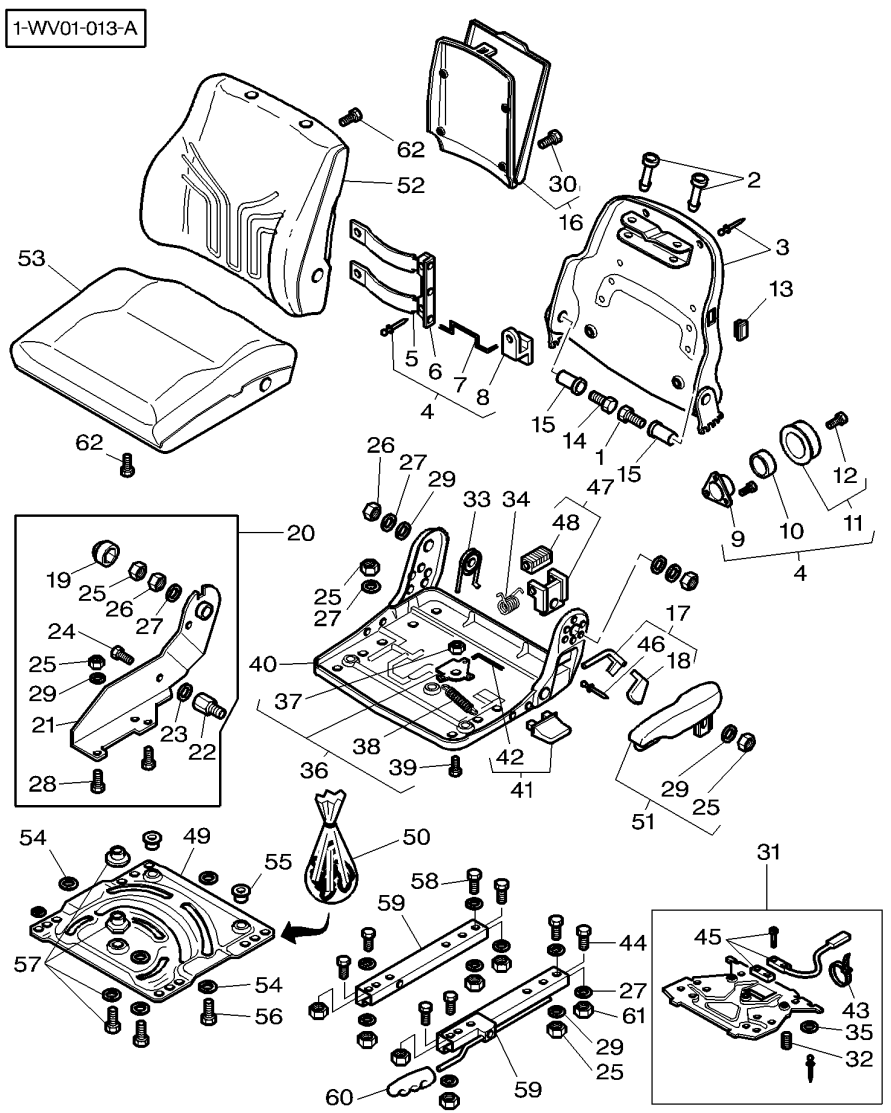

52*	3903963M1		**1**	CUSHION	COUSSIN CUSCINO	POLSTER COJIN
53*	3907132M1		**1**	CUSHION	COUSSIN CUSCINO	POLSTER COJIN
54	390735X1	∅ 13 X 2.5-0.12	**8**	FLAT WASHER	RONDELLE PLATE RONDELLE PIANA	UNTERLEGSCHEIBEN ARANDELA PLANA
55	F198500030250		**2**	SLIDING DISC	DISQUE GLISSEM. SLIDING DISC	GLEITSCHEIBE SLIDING DISC
56	F716501030080		**4**	PIN	GOUPILLE COPPIGLIA	STIFT PASADOR
57	F916501030230		**1**	KIT, REPAIR	JEU REPARATION KIT RIPARAZIONE	REPARATURSATZ JUEGO REPARACION
58	339124X1	M8 X 16	**4**	HEX. SOCK. SCREW	VIS TETE HEX VITE PARKER	ZYLINDERSCHRAUBE TORN.CAB.HUECA
59	F716501030050		**1**	KIT, SLIDER	JEU GLISSIERES KIT, SLIDER	VERST.SCHIENENS. KIT, SLIDER
60	F716501030060		**1**	HANDLE	MANCHE IMPUGNATURA	GRIFF EMPUNADURA
61	3904089M1	M8	**4**	NUT	ECROU DADO	MUTTER TUERCA
62	F718500030100	M5 X 25	**7**	SCREW	VIS VITE	SCHRAUBE TORNILLO

[A] NOT SERVICED
PAS FOURNI
NICHT LIEFERBAR
NON FORNITO
NO SUMINISTRADA

[B] INCLUDE ITEMS 54-55-56-57
COMPREND ITEMS 54-55-56-57
BEINHALTET POS NR 54-55-56-57
INCLUDEIL NUMEROS 54-55-56-57
INCLUYE EL NO 54-55-56-57

Seat
Siege
Fahrersitz
Sedile
Asiento

110-225

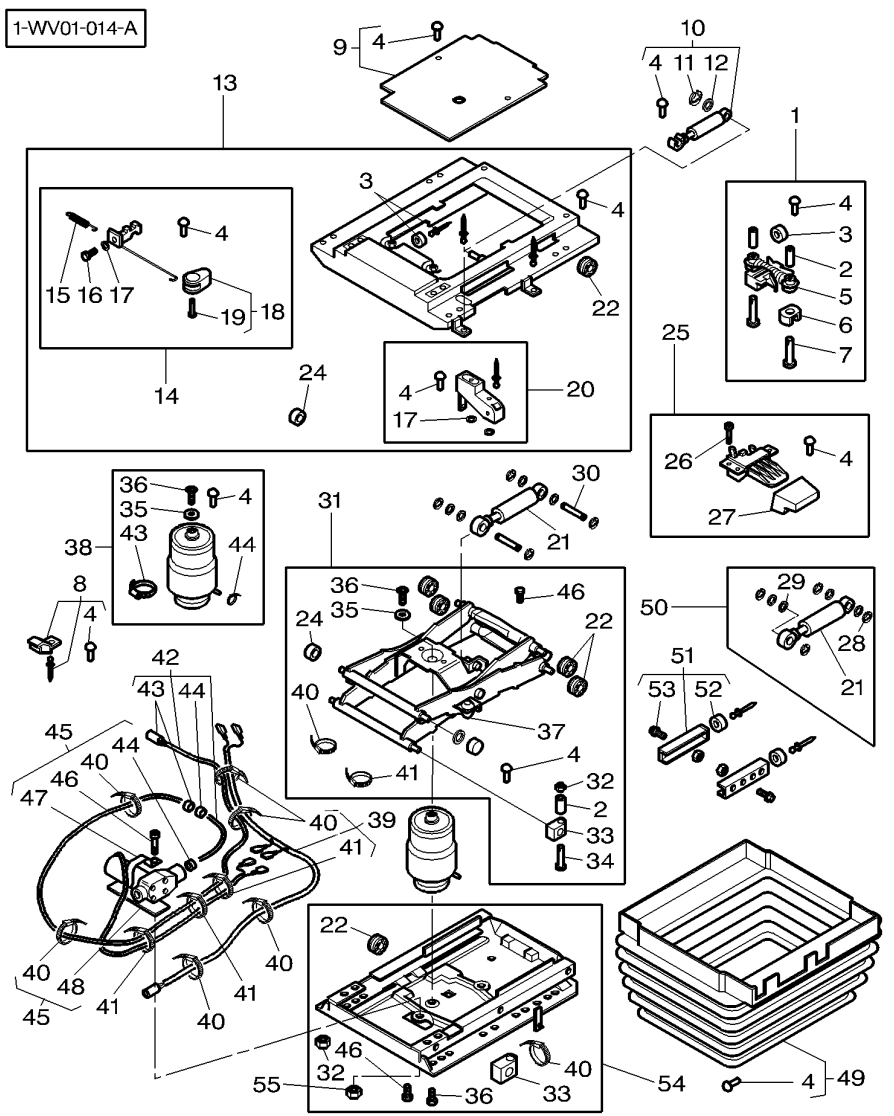

0*	4272519M94		**1**	SEAT	SIEGE SEDILE	SITZ ASIENTO
1	3903032M91		**1**	SHOCK ABSORBER	AMORTISSEUR CHOC AMMORTIZZATORE	STOSSDAEMPFER AMORTIGUADOR
2	3105404M1		**4**	TUBE	TUBE TUBO.	ROHR TUBO.
3	3903040M1		**1**	BUFFER	BUTOIR RESPINGENTE	PUFFER PARACHOQUES
4	F184531030210	⇔ 1719896M1	**24**	PLUG	BOUCHON TAPPO	STOPFEN TAPON
5	F178500030460	⇔ 3903033M1	**2**	BUSH	BAGUE BOCCOLA	RING CASQUILLO
6	3903034M1		**1**	BUFFER	BUTOIR RESPINGENTE	PUFFER PARACHOQUES
7	339287X1	M8 X 35	**2**	HEX. SOCK. SCREW	VIS TETE HEX VITE PARKER	ZYLINDERSCHRAUBE TORN.CAB.HUECA
8	F312500031050	⇔ 3903036M1	**2**	STOP	BUTEE STOP	ANSCHLAG PARO
9	F524500033080	⇔ 3903037M91	**1**	COVERING	TOLE PROTECTION COVERING	ABDECKUNG COVERING
10	3903039M91		**1**	SHOCK ABSORBER	AMORTISSEUR CHOC AMMORTIZZATORE	STOSSDAEMPFER AMORTIGUADOR
11	1441206X1		**1**	TOOTH WASHER	RONDELLE DENTEE ROSETTA DENTATA	ZAHNSCHEIBE ARANDELA ESTRELL
12	391565X1		**1**	WASHER METRIC	RONDELLE METR. RONDELLA METRICO	SCHEIBE METRISCH ARANDELA METRICO
13	3903038M91		**1**	FIT PLATE SEAT	PLAQUE MONT SIEG FISSAGGIO SEDILE	SITZMONT.PLATTE PLACA FIJ.ASIENT
14	3903045M91		**1**	ROD LINK	BIELLETTE BISCOTTINO	VERBINDG.STANGE VARILLA ENGANCHE
15	3903044M1		**2**	SPRING	RESSORT MOLLA	FEDER MUELLE
16	F916500031180	3,5 X 12	**1**	SCREW	VIS VITE	SCHRAUBE TORNILLO
17	339362X1		**3**	WASHER	RONDELLE RONDELLA	SCHEIBE ARANDELA
18	F524500033100		**1**	HANDLE	MANCHE IMPUGNATURA	GRIFF EMPUNADURA
19	3903065M1	4 X 14	**1**	SCREW	VIS VITE	SCHRAUBE TORNILLO
20	F312500030090	⇔ 3903041M91	**1**	GAUGE	APPAREIL INDICAT MISURATORE	MESSGERAET APARAT INDICADOR
21		REF. 50	**1**	RAM	VERIN CILINDRO IDRAUL.	HYDR.ZYLINDER ARIETE
22	3903050M1		**4**	ROLLER	GALET ROTELLA	ROLLE RODILLO
23	3903135M91	[AB]	**1**	KIT, REPAIR	JEU REPARATION KIT RIPARAZIONE	REPARATURSATZ JUEGO REPARACION
24	F916501030140		**2**	ROLLER	GALET ROTELLA	ROLLE RODILLO
25	F312500030130		**1**	ACTUATION	ACTIONNEMENT ACTUATION	BETAETIGUNG ACTUATION

Seat
Siege
Fahrersitz
Sedile
Asiento

110-225

1-WV01-014-A

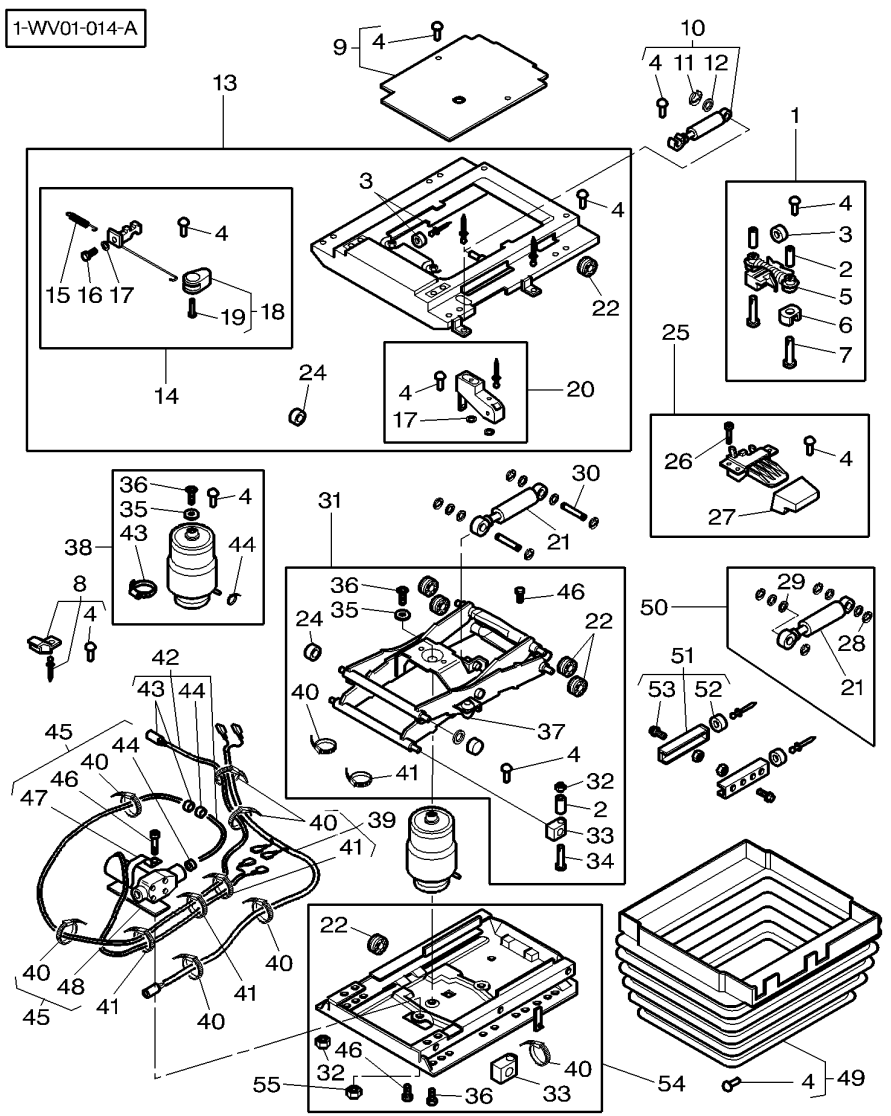

26	3904087M1	M5 X 16	**3**	BOLT	BOULON BULLONE	BOLZEN BULON
27	F716501030620	⇔ 3903042M1	**1**	HANDLE	MANCHE IMPUGNATURA	GRIFF EMPUNADURA
28	390287X1		**4**	SPRING WASHER	RONDELLE ELASTIQ RONDELLA ELASTI.	FEDERSCHEIBE ARANDELA ELASTI.
29	3101663M1		**3**	WASHER	RONDELLE RONDELLA	SCHEIBE ARANDELA
30	3903035M1		**2**	CLEVIS PIN	AXE PERNO D'ATTACCO	SPLINTBOLZEN BULON CILINDRICO
31	F716501030770	⇔ 3903047M91	**1**	ARM	BRAS BRACCIO	SCHARHEBEL BRAZO
32	3000193X1	M8	**3**	NUT	ECROU DADO	MUTTER TUERCA
33	F312500030160	⇔ 3903049M1	**2**	BEARING PLATE	PLAQUE ROULEMENT PIASTRA CUSCINET	LAGERPLATTE PLACA DE APOYO
34	F312500030170		**2**	PIN	GOUPILLE COPPIGLIA	STIFT PASADOR
35	391565X1		**1**	WASHER METRIC	RONDELLE METR. RONDELLA METRICO	SCHEIBE METRISCH ARANDELA METRICO
36	F312500030110	8 X 20	**2**	SCREW	VIS VITE	SCHRAUBE TORNILLO
37	F158500030010	⇔ 1719867M1	**2**	BUFFER	BUTOIR RESPINGENTE	PUFFER PARACHOQUES
38	3903051M91		**1**	ACCUMULATOR	ACCUMULATEUR ACCUMULATORE	AKKUMULATOR ACUMULADOR
39	3903056M91		**1**	CABLE	CABLE CAVO	KABEL CABLE
40	3903106M1		**7**	TIE	ATTACHE TRAVERSA ATTACCO	ANBINDUNG BARRA DE ENLACE
41	3903068M1		**4**	TIE	ATTACHE TRAVERSA ATTACCO	ANBINDUNG BARRA DE ENLACE
42	3904445M91		**1**	KIT, REPAIR	JEU REPARATION KIT RIPARAZIONE	REPARATURSATZ JUEGO REPARACION
43	3903052M1		**2**	OLIVE	OLIVE OLIVA	OLIVE OLIVA
44	3105395M1		**2**	HOSE CLIP	COLLIER DURITE COLLARE DI TUBO	SCHLAUCHBINDER ABRAZADERA TUBO
45	3903057M91		**1**	COMPRESSOR	COMPRESSEUR COMPRESSORE	KOMPRESSOR COMPRESOR
46	3001414X1	M8 X 12	**1**	SCREW METRIC	VIS METRIQUE VITE METRICA	SCHRAUBE METR TORNILLO METRICO
47	F916500030010	⇔ 3903053M1	**1**	STIRRUP	ETRIER STAFFA	BUEGEL FUACION
48	3903054M1		**1**	PLATE	PLAQUE PIASTRA	PLATTE PLATO
49	3903060M91		**1**	BELLOWS	SOUFFLET SOFFIETTO	FALTENBALG FUELLE
50	F312500030100	⇔ 3903058M91	**1**	SHOCK ABSORBER	AMORTISSEUR CHOC AMMORTIZZATORE	STOSSDAEMPFER AMORTIGUADOR
51	F930500030130	⇔ 3903062M1	**1**	STOP	BUTEE STOP	ANSCHLAG PARO

Seat
Siege
Fahrersitz
Sedile
Asiento

110-225

1-WV01-014-A

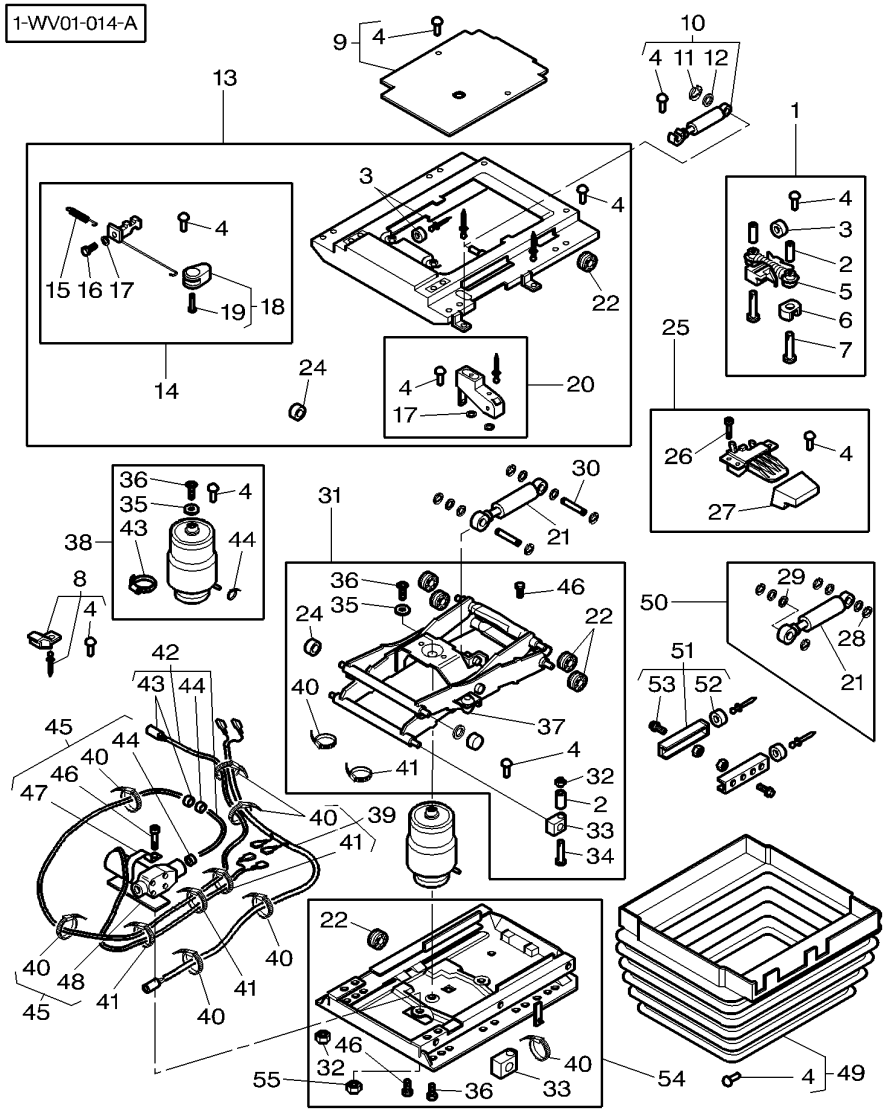

52	3102401M1		**2**	BUFFER	BUTOIR RESPINGENTE	PUFFER PARACHOQUES
53	3101996M1	M8 X 16	**2**	SCREW SPECIAL	VIS SPECIALE VITE SPECIALE	SPEZIALSCHRAUBE TORNILLO ESPEC.
54	F312500030300	<> 3903059M91	**1**	BOTTOM PART	PIECE INFERIEURE PARTE INFERIORE	UNTERTEIL PIEZA DE PISO
55	3000193X1	M8	**1**	NUT	ECROU DADO	MUTTER TUERCA

[A] INCLUDE ITEM 2/3/4/6/22/24/33/35/36/37/40/41 /44/46/51
COMPREND L'ITEM 2/3/4/6/22//24/33/35/36/37/ 40/41/44/46/51
BEINHALTET POS NR. 2/3/4/6/22//24/33/35/36/37/ 40/41/44/46/51
INCLUDE IL NUMERO 2/3/4/6/22/24/33/35/36/37/ 40/41/44/46/51
INCLUYE EL NO 2/3/4/6/22/24/33/35/36/37/40/41 /44/46/51

[B] NOT ILLUSTRATED
NON ILLUSTRE
NICHT ILLUSTRIERT
NON ILLUSTRATO
NO ILUSTRADO

Seat
Siege
Fahrersitz
Sedile
Asiento

110-230

Air Pressure Seat With Automatic Adjustment - Luxuy
Siege Pneumatique Avec Reglage Automatique - De Luxe
Luftpolsterungsitz Mit Automatischeinstellung - Luxus
Sedile Pneumatico Con Aggiustatore Automatico - Lusso
Asiento Pneumatico Con Ajuste Automatico - Lujo

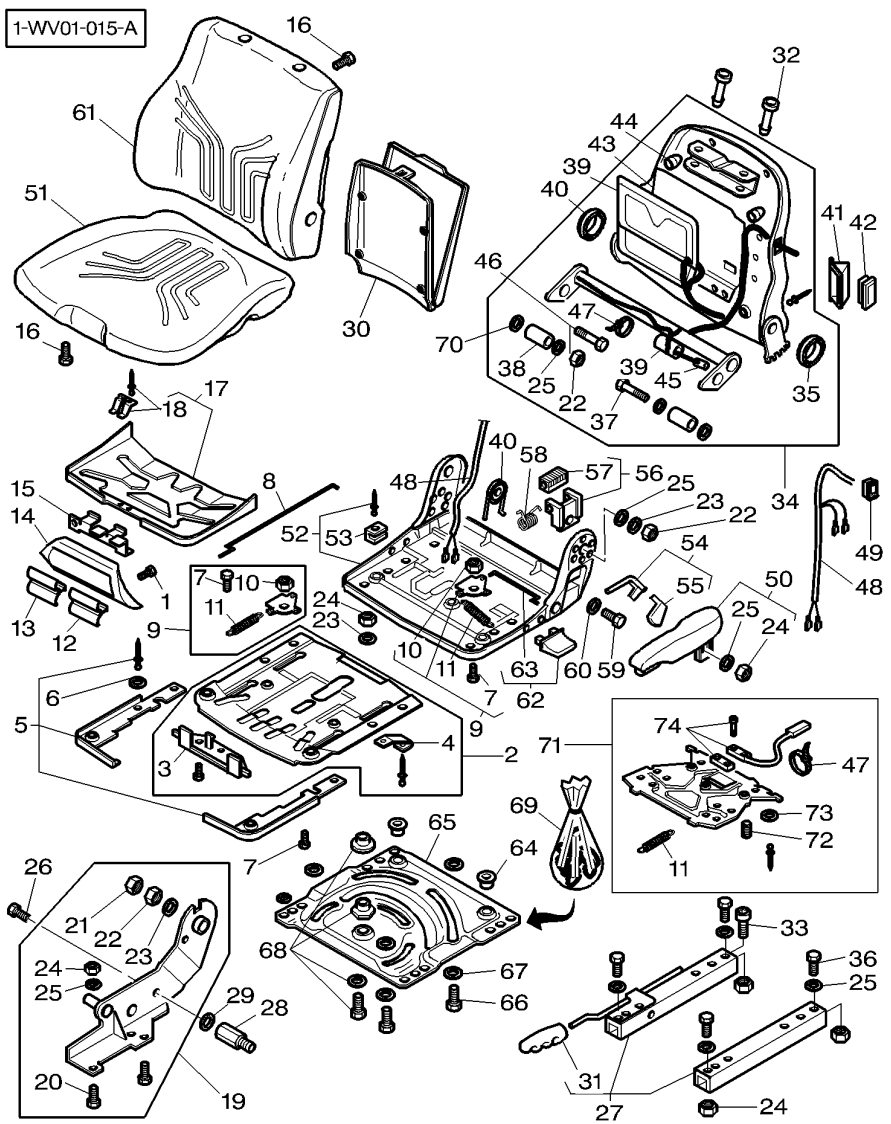

0*	4272523M94		1	SEAT	SIEGE SEDILE	SITZ ASIENTO
1	3904087M1	5x16	2	BOLT	BOULON BULLONE	BOLZEN BULON
2	F716501030130		1	PLATE	PLAQUE PIASTRA	PLATTE PLATO
3	F716501030180		1	NOTCHED PLATE	PLAQUE DENTEE PIASTRA INCAVATA	RASTE PLATO DENTADO
4	F716501030140		1	SHEET METAL	CARROSSERIE CARROZZERIA	BLECH HOJA METALICA
5	F716501030170		1	COVERING	TOLE PROTECTION COVERING	ABDECKUNG COVERING
6	339362X1		2	WASHER	RONDELLE RONDELLA	SCHEIBE ARANDELA
7	339228X1	M8x12	2	HEX. SOCK. SCREW	VIS TETE HEX VITE PARKER	ZYLINDERSCHRAUBE TORN.CAB.HUECA
8	F716501030150		1	LINKAGE	ARTICULATION TIRANTERIA	GESTAENGE VARILLAJE
9	F716501030090		2	LEVER	LEVIER LEVA	HEBEL PALANCA
10	F716501030100		2	RING	ANNEAU ANELLO	RING. ANILLO
11	F198500030270	<> 3104902M1	2	TENSION SPRING	RESSORT TRACTION MOLLA TENDITRICE	ZUGFEDER MUELLE TENSION
12	F716501030360		1	HANDLE	MANCHE IMPUGNATURA	GRIFF EMPUNADURA
13	F716501030350		1	HANDLE	MANCHE IMPUGNATURA	GRIFF EMPUNADURA
14	F716501030340		1	COVERING	TOLE PROTECTION COVERING	ABDECKUNG COVERING
15	F716501030330		1	LEVER	LEVIER LEVA	HEBEL PALANCA
16	F718500030100	M5x25	8	SCREW	VIS VITE	SCHRAUBE TORNILLO
17	F716501030310		1	PIVOT PLATE	PLAQUE PIVOT PIASTRA GIREVOLE	WIPPE PLACA DE PIVOTE
18	F716501030320		1	SHEET METAL	CARROSSERIE CARROZZERIA	BLECH HOJA METALICA
19	3907123M92		1	SUPPORT	SUPPORT SOPPORTO	TRAGER SOPORTE
20	3009439X1	M8x16	4	SCREW	VIS VITE	SCHRAUBE TORNILLO
21	3903607M1		1	CLEVIS	CHAPE GANCIO D'ATTACCO	GABELSTUECK GANCHO SEGURI.
22	3000193X1	M8	2	NUT	ECROU DADO	MUTTER TUERCA
23	391565X1		9	WASHER METRIC	RONDELLE METR. RONDELLA METRICO	SCHEIBE METRISCH ARANDELA METRICO
24	339169X1	M8	10	NUT	ECROU DADO	MUTTER TUERCA
25	391039X1		9	FLAT WASHER	RONDELLE PLATE RONDELLE PIANA	UNTERLEGSCHEIBEN ARANDELA PLANA

Seat
Siege
Fahrersitz
Sedile
Asiento

110-230

Air Pressure Seat With Automatic Adjustment - Luxuy
Siege Pneumatique Avec Reglage Automatique - De Luxe
Luftpolsterungsitz Mit Automatischeinstellung - Luxus
Sedile Pneumatico Con Aggiustatore Automatico - Lusso
Asiento Pneumatico Con Ajuste Automatico - Lujo

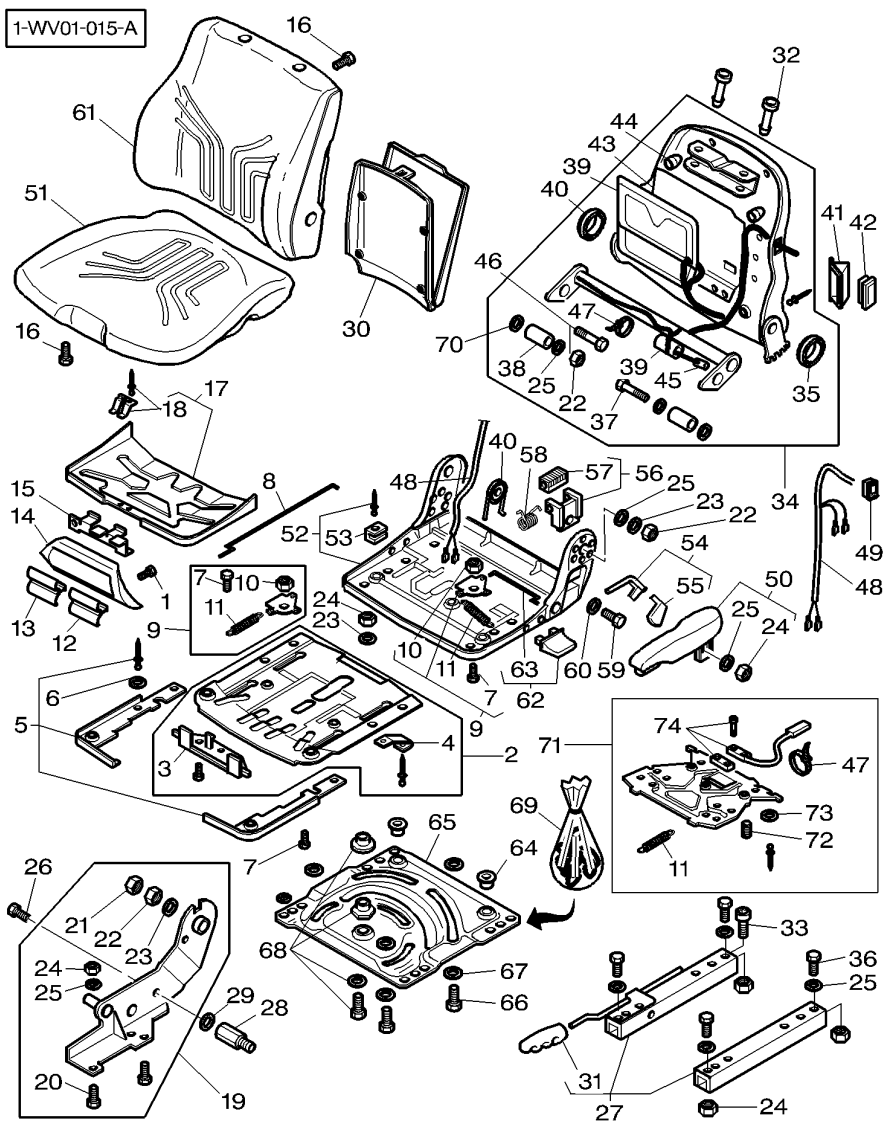

26	353557X1	7/16-20x20	**1**	BOLT UNF	BOULON UNF BULLONE UNF	MASCH.SCHRB.UNF PERNO UNF
27	F716501030050		**1**	KIT, SLIDER	JEU GLISSIERES KIT, SLIDER	VERST.SCHIENENS. KIT, SLIDER
28	3907121M1		**1**	BOLT	BOULON BULLONE	BOLZEN BULON
29	3903605M1		**1**	INSERT	DOUILLE INSERTO	EINSATZSTUECK INSERCION
30	G515500030100		**1**	POCKET	POCHE SACCA	TASCHE BOLSA
31	F716501030060		**1**	HANDLE	MANCHE IMPUGNATURA	GRIFF EMPUNADURA
32	F716501030510		**2**	GUIDE SLEEVE	MANCHON GUIDE MANICOTTO GUIDA	FUEHRUNGSHUELSE MANGUITO GUIA
33	3009285X1	M8x16 ⇒ 1441000X1	**4**	SCREW	VIS VITE	SCHRAUBE TORNILLO
34	F916501030050		**1**	BACK PART	PARTIE DORSALE BACK PART	RUECKENTEIL BACK PART
35	3907136M1		**1**	WASHER	RONDELLE RONDELLA	SCHEIBE ARANDELA
36	339124X1	M8x16	**4**	HEX. SOCK. SCREW	VIS TETE HEX VITE PARKER	ZYLINDERSCHRAUBE TORN.CAB.HUECA
37	339168X1	M8x50	**2**	HEX. SOCK. SCREW	VIS TETE HEX VITE PARKER	ZYLINDERSCHRAUBE TORN.CAB.HUECA
38	F716501030380		**2**	TUBING	TUBULURE TUBATURA	ROHRSTUTZEN TUBERIA
39	F916501030100		**1**	LUMBAR SUPPORT	SUPPORT LOMBAIRE LUMBAR SUPPORT	LENDENSTUETZE LUMBAR SUPPORT
40	F716501030740		**1**	SPRING	RESSORT MOLLA	FEDER MUELLE
41	F916501030070		**1**	COVERING	TOLE PROTECTION COVERING	ABDECKUNG COVERING
42	3903843M1		**1**	SWITCH	INTERRUPTEUR INTERRUTTORE	SCHALTER INTERRUPTOR
43	F916501030080		**1**	PLATE	PLAQUE PIASTRA	PLATTE PLATO
44	F158500030010	⇔ 1719867M1	**2**	BUFFER	BUTOIR RESPINGENTE	PUFFER PARACHOQUES
45	3903970M1		**3**	SPRING	RESSORT MOLLA	FEDER MUELLE
46	3903806M1	M8x60	**1**	SCREW	VIS VITE	SCHRAUBE TORNILLO
47	3903106M1		**9**	TIE	ATTACHE TRAVERSA ATTACCO	ANBINDUNG BARRA DE ENLACE
48	F312500031280		**1**	HARNESS	FAISCEAU FASCIOCAVI	KABELBAUM MAZO CABLES
49	F916501030110	[A]	**1**	SWITCH	INTERRUPTEUR INTERRUTTORE	SCHALTER INTERRUPTOR
50	3904442M91		**1**	ARMREST	ACCOUDOIR BRACCIOLO	ARMLEHNE APOYABRAZOS
51*	3907140M1		**1**	CUSHION	COUSSIN CUSCINO	POLSTER COJIN

Seat
Siege
Fahrersitz
Sedile
Asiento

110-230

Air Pressure Seat With Automatic Adjustment - Luxuy
Siege Pneumatique Avec Reglage Automatique - De Luxe
Luftpolsterungsitz Mit Automatischeinstellung - Luxus
Sedile Pneumatico Con Aggiustatore Automatico - Lusso
Asiento Pneumatico Con Ajuste Automatico - Lujo

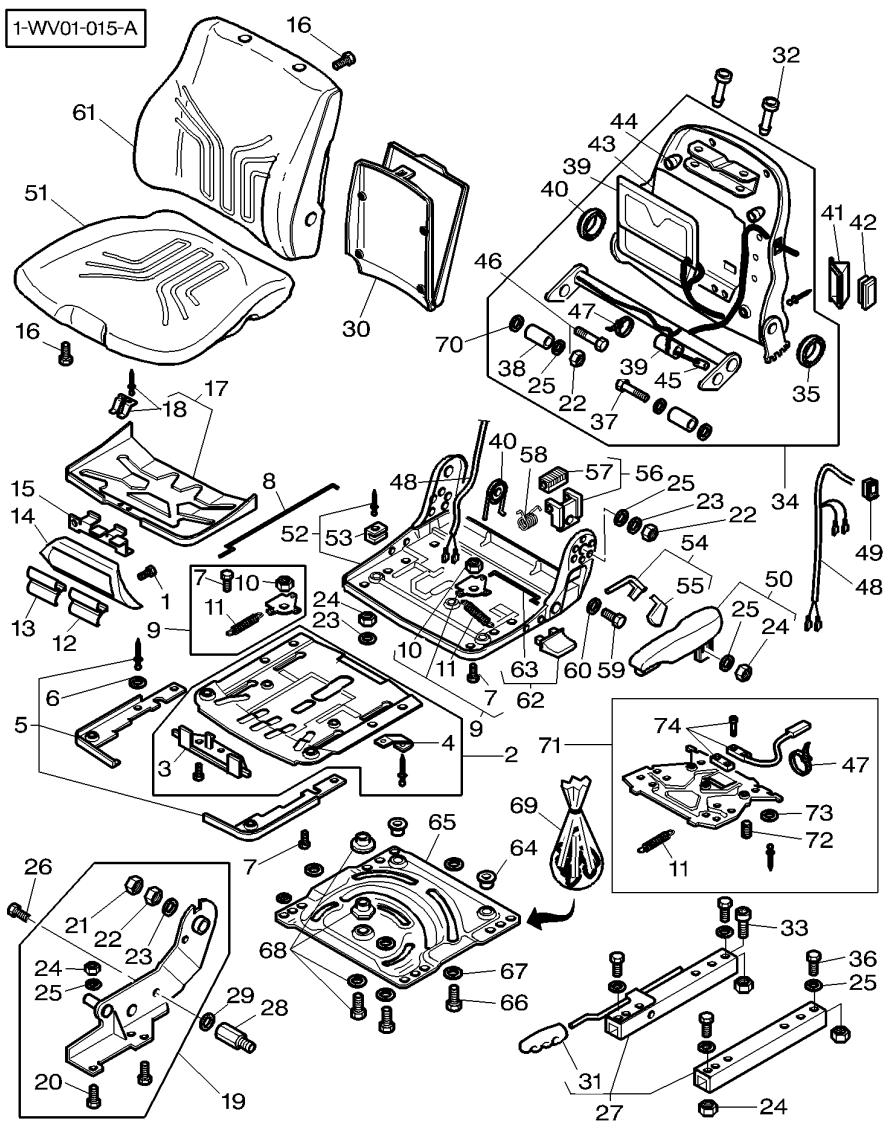

52	F916501030040		**1**	SEAT PLATE	PLAQUE SIEGE PIASTRA SEDILE	SITZPLATTE PLACA DE ASIENTO
53	F716501030200		**1**	SLIDE	COULISSE SLITTA	GLEITSTUECK CORREDERA
54	F716501030290	⇔ 3904264M1	**1**	LEVER	LEVIER LEVA	HEBEL PALANCA
55	F716501030300	⇔ 3904265M1	**1**	HANDLE	MANCHE IMPUGNATURA	GRIFF EMPUNADURA
56	F716501030280	⇔ 3904270M1	**1**	SUPPORT	SUPPORT SOPPORTO	TRAGER SOPORTE
57	F411501030010	⇔ 3904269M1	**1**	EXCLUDER	EXTRACTEUR ESCLUSORE	SPERRE ELIMINADOR
58*	F718500030030		**1**	SPRING	RESSORT MOLLA	FEDER MUELLE
59	353562X1	7/16-20X35	**1**	BOLT UNF	BOULON UNF BULLONE UNF	MASCH.SCHRB.UNF PERNO UNF
60	353428X1	7/16-20	**1**	NUT UNF	ECROU UNF DADO UNF	MUTTER UNF TUERCA UNF
61*	3907139M1		**1**	CUSHION	COUSSIN CUSCINO	POLSTER COJIN
62	F716501030120		**1**	HANDLE	MANCHE IMPUGNATURA	GRIFF EMPUNADURA
63	F716501030110	62	**1**	LINKAGE	ARTICULATION TIRANTERIA	GESTAENGE VARILLAJE
64	F198500030250		**2**	SLIDING DISC	DISQUE GLISSEM. SLIDING DISC	GLEITSCHEIBE SLIDING DISC
65	F716501030070		**1**	TURNTABLE	TABLE TOURNANTE TAVOLA ROTANTE	DREHTISCH PLACA GIRATORIA
66	F716501030080		**4**	PIN	GOUPILLE COPPIGLIA	STIFT PASADOR
67	390735X1		**8**	FLAT WASHER	RONDELLE PLATE RONDELLE PIANA	UNTERLEGSCHEIBEN ARANDELA PLANA
68	F916501030230		**1**	KIT, REPAIR	JEU REPARATION KIT RIPARAZIONE	REPARATURSATZ JUEGO REPARACION
69*	3904275M1	[B]	**1**	PARTS PACK	JEU PIECES PACCO RICAMBI	SATZ TEILE PAQUETE PIEZAS
70	1444351X1		**2**	WASHER	RONDELLE RONDELLA	SCHEIBE ARANDELA
71	3907126M91		**1**	TIMING DEVICE	SYSTEME REGLAGE SINCRONIZZATORE.	EINST.-HINWEIS DISPOS DISTRIB
72	3907124M1		**3**	SPRING	RESSORT MOLLA	FEDER MUELLE
73	3105034M1		**2**	SHOCK ABSORBER	AMORTISSEUR CHOC AMMORTIZZATORE	STOSSDAEMPFER AMORTIGUADOR
74	3907125M91		**1**	SWITCH	INTERRUPTEUR INTERRUTTORE	SCHALTER INTERRUPTOR

[A] HEATER
CHAUFFAGE
HEIZUNG
RISCALDATORE
CALEFACTOR

Seat **Siege** **Fahrersitz** **Sedile** **Asiento**	**110-230**	**Air Pressure Seat With Automatic Adjustment - Luxuy** **Siege Pneumatique Avec Reglage Automatique - De Luxe** **Luftpolsterungsitz Mit Automatischeinstellung - Luxus** **Sedile Pneumatico Con Aggiustatore Automatico - Lusso** **Asiento Pneumatico Con Ajuste Automatico - Lujo**

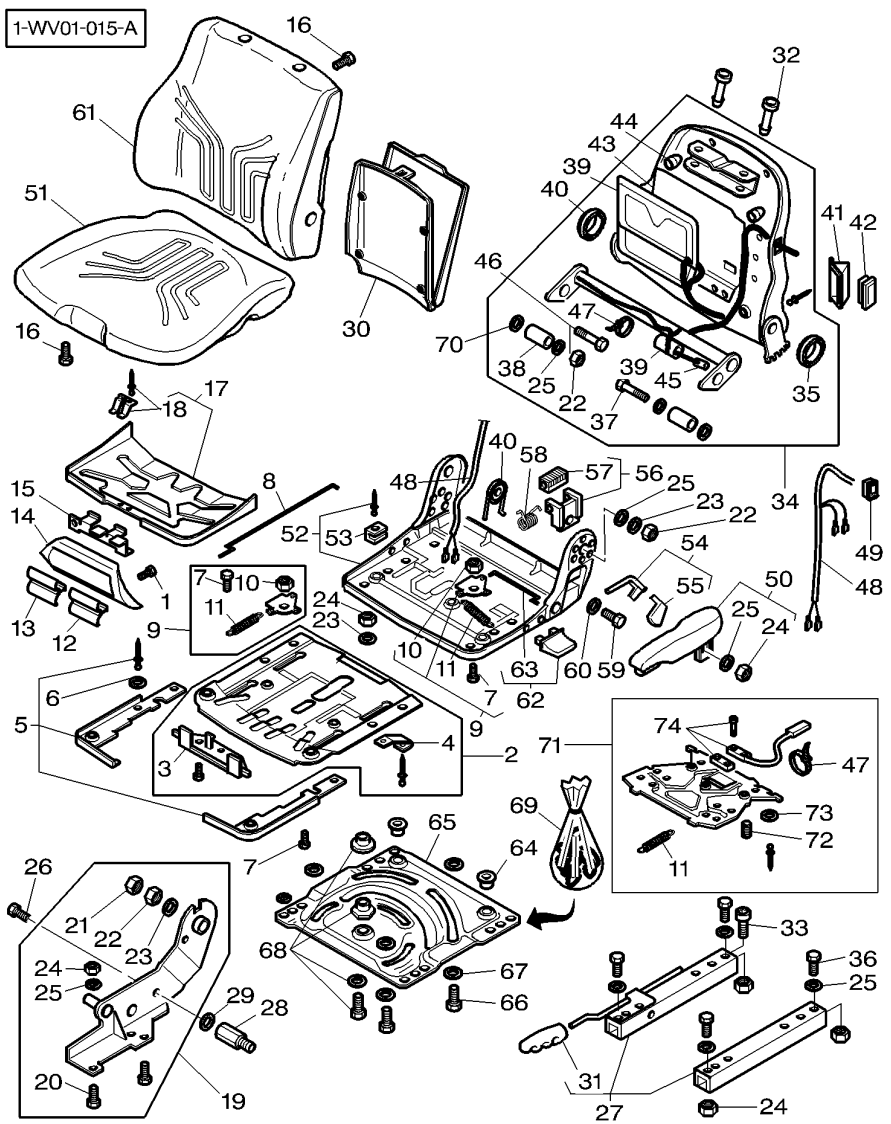

[B] INCLUDE ITEMS 64-66-67-68
COMPREND ITEMS 64-66-67-68
BEINHALTET POS NR 64-66-67-68
INCLUDEIL NUMEROS 64-66-67-68
INCLUYE EL NO 64-66-67-68

Seat
Siege
Fahrersitz
Sedile
Asiento

110-235

Air Pressure Seat With Automatic Adjustment - Luxuy
Siege Pneumatique Avec Reglage Automatique - De Luxe
Luftpolsterungsitz Mit Automatischeinstellung - Luxus
Sedile Pneumatico Con Aggiustatore Automatico - Lusso
Asiento Pneumatico Con Ajuste Automatico - Lujo

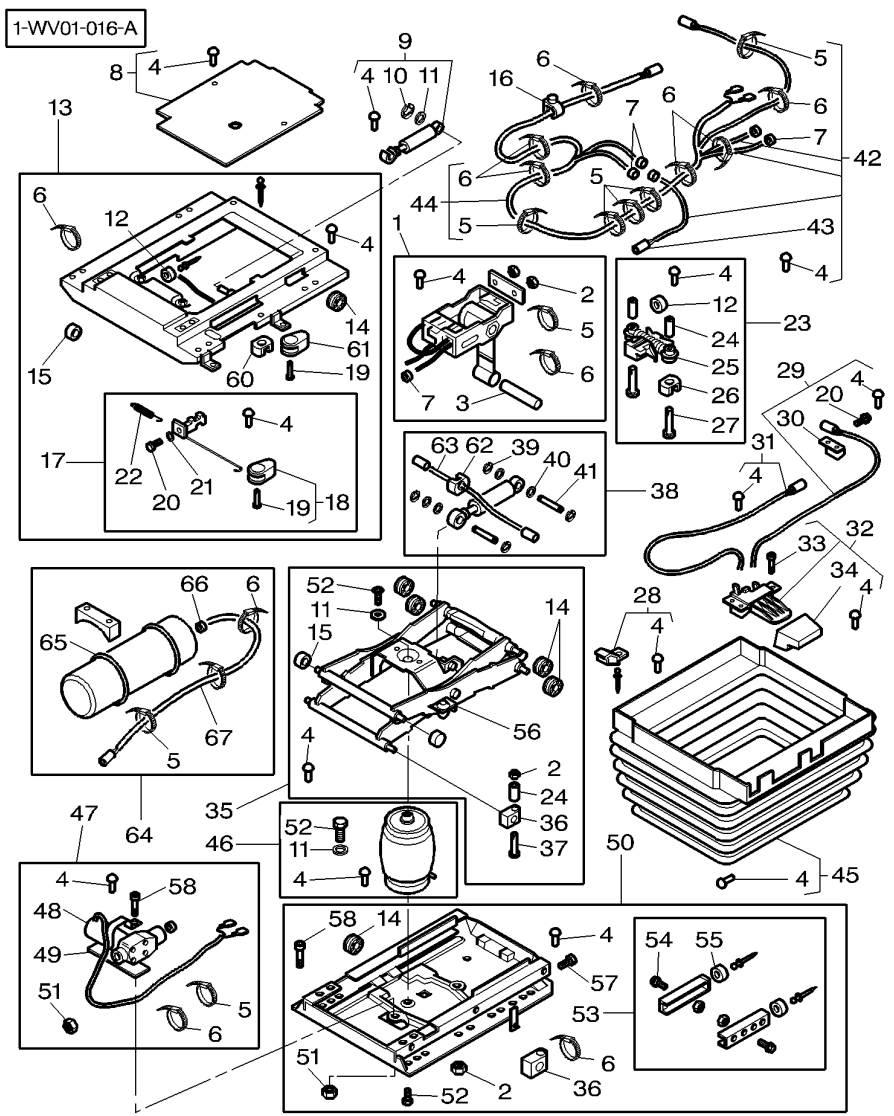

0*	4272523M94		**1**	SEAT	SIEGE SEDILE	SITZ ASIENTO
1	F930500030220		**1**	CONTROL	CONTROLE CONTROLLO	STEUERUNG MANDO
2	3000193X1	M8	**5**	NUT	ECROU DADO	MUTTER TUERCA
3	F312500031020		**1**	PIN	GOUPILLE COPPIGLIA	STIFT PASADOR
4	F184531030210	⇔ 1719896M1	**24**	PLUG	BOUCHON TAPPO	STOPFEN TAPON
5	3903068M1	4,7x204 MM	**4**	TIE	ATTACHE TRAVERSA ATTACCO	ANBINDUNG BARRA DE ENLACE
6	3903106M1	2,5x102 MM	**5**	TIE	ATTACHE TRAVERSA ATTACCO	ANBINDUNG BARRA DE ENLACE
7	3903052M1		**4**	OLIVE	OLIVE OLIVA	OLIVE OLIVA
8	F524500033080	⇔ 3903037M91	**1**	COVERING	TOLE PROTECTION COVERING	ABDECKUNG COVERING
9	3903039M91		**1**	SHOCK ABSORBER	AMORTISSEUR CHOC AMMORTIZZATORE	STOSSDAEMPFER AMORTIGUADOR
10	1441206X1	∅ 6 MM	**1**	TOOTH WASHER	RONDELLE DENTEE ROSETTA DENTATA	ZAHNSCHEIBE ARANDELA ESTRELL
11	391565X1	∅ 8.4 MM	**2**	WASHER METRIC	RONDELLE METR. RONDELLA METRICO	SCHEIBE METRISCH ARANDELA METRICO
12	3903040M1		**1**	BUFFER	BUTOIR RESPINGENTE	PUFFER PARACHOQUES
13	3903814M91		**1**	FIT PLATE SEAT	PLAQUE MONT SIEG FISSAGGIO SEDILE	SITZMONT.PLATTE PLACA FIJ.ASIENT
14	F916501030150		**4**	ROLLER	GALET ROTELLA	ROLLE RODILLO
15	F916501030140		**2**	ROLLER	GALET ROTELLA	ROLLE RODILLO
16	3903823M1		**1**	CABLE CLAMP	SERRE CABLE SERRA CAVO	KABELSCHELLE ABRAZADERA CABLE
17	3903045M91		**1**	ROD LINK	BIELLETTE BISCOTTINO	VERBINDG.STANGE VARILLA ENGANCHE
18	F524500033100		**1**	HANDLE	MANCHE IMPUGNATURA	GRIFF EMPUNADURA
19	3903065M1	4x14	**1**	SCREW	VIS VITE	SCHRAUBE TORNILLO
20	F916500031180	3.5x12MM	**2**	SCREW	VIS VITE	SCHRAUBE TORNILLO
21	339362X1	∅ 4,3 MM	**1**	WASHER	RONDELLE RONDELLA	SCHEIBE ARANDELA
22	3903044M1		**2**	SPRING	RESSORT MOLLA	FEDER MUELLE
23	3903032M91	1	**1**	SHOCK ABSORBER	AMORTISSEUR CHOC AMMORTIZZATORE	STOSSDAEMPFER AMORTIGUADOR
24	3105404M1	1	**4**	TUBE	TUBE TUBO.	ROHR TUBO.
25	F178500030460	⇔ 3903033M1	**2**	BUSH	BAGUE BOCCOLA	RING CASQUILLO

Seat
Siege
Fahrersitz
Sedile
Asiento

110-235

Air Pressure Seat With Automatic Adjustment - Luxuy
Siege Pneumatique Avec Reglage Automatique - De Luxe
Luftpolsterungsitz Mit Automatischeinstellung - Luxus
Sedile Pneumatico Con Aggiustatore Automatico - Lusso
Asiento Pneumatico Con Ajuste Automatico - Lujo

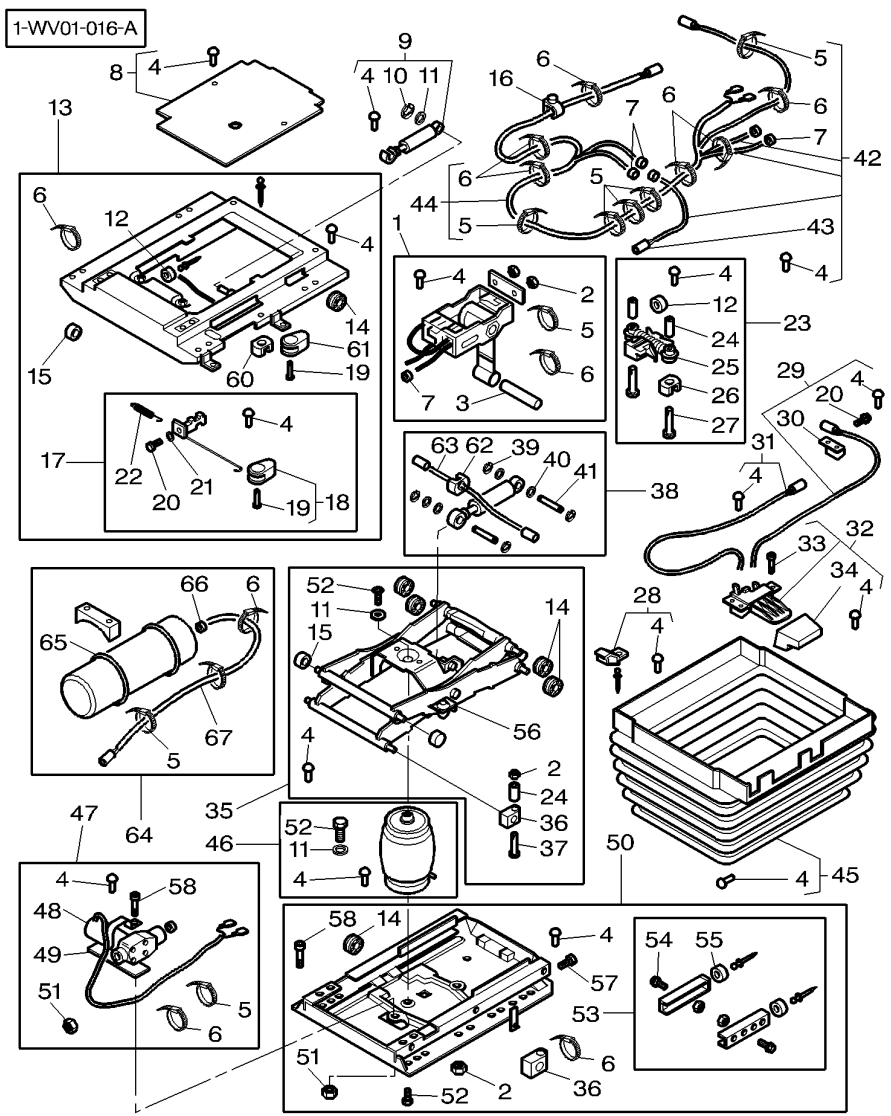

26	3903034M1		2	BUFFER	BUTOIR RESPINGENTE	PUFFER PARACHOQUES
27	339287X1	M8x35	2	HEX. SOCK. SCREW	VIS TETE HEX VITE PARKER	ZYLINDERSCHRAUBE TORN.CAB.HUECA
28	F312500031050	⇔ 3903036M1	2	STOP	BUTEE STOP	ANSCHLAG PARO
29	F716501030610		1	BOWDEN CABLE	CABLE BOWDEN CAVO BOWDEN	BOWDENZUG CABLE BOWDEN
30	3903136M1		1	SUPPORT	SUPPORT SOPPORTO	TRAGER SOPORTE
31	F312500031110		1	BOWDEN CABLE	CABLE BOWDEN CAVO BOWDEN	BOWDENZUG CABLE BOWDEN
32	F312500031130	⇔ 3903043M91	1	ACTUATION	ACTIONNEMENT ACTUATION	BETAETIGUNG ACTUATION
33	3904087M1	M5X16	3	BOLT	BOULON BULLONE	BOLZEN BULON
34	F716501030620	⇔ 3903042M1	1	HANDLE	MANCHE IMPUGNATURA	GRIFF EMPUNADURA
35	F716501030770	⇔ 3903047M91	1	ARM	BRAS BRACCIO	SCHARHEBEL BRAZO
36	F312500030160	⇔ 3903049M1	2	BEARING PLATE	PLAQUE ROULEMENT PIASTRA CUSCINET	LAGERPLATTE PLACA DE APOYO
37	F312500030170		2	PIN	GOUPILLE COPPIGLIA	STIFT PASADOR
38	3903822M91		1	SHOCK ABSORBER	AMORTISSEUR CHOC AMMORTIZZATORE	STOSSDAEMPFER AMORTIGUADOR
39	390287X1		4	SPRING WASHER	RONDELLE ELASTIQ RONDELLA ELASTI.	FEDERSCHEIBE ARANDELA ELASTI.
40	3101663M1		4	WASHER	RONDELLE RONDELLA	SCHEIBE ARANDELA
41	3903035M1		2	CLEVIS PIN	AXE PERNO D'ATTACCO	SPLINTBOLZEN BULON CILINDRICO
42	3907594M91	●○ 3903141M91	1	HYDR. HOSE	FLEXIBLE TUBOFLEX IDRAUL	HYDR. SCHLAUCH TUBO HIDRAULICO
43	3105395M1		2	HOSE CLIP	COLLIER DURITE COLLARE DI TUBO	SCHLAUCHBINDER ABRAZADERA TUBO
44	3903817M91		1	CABLE	CABLE CAVO	KABEL CABLE
45	F312500031190		1	BELLOWS	SOUFFLET SOFFIETTO	FALTENBALG FUELLE
46	3903051M91		1	ACCUMULATOR	ACCUMULATEUR ACCUMULATORE	AKKUMULATOR ACUMULADOR
47	3903057M91		1	COMPRESSOR	COMPRESSEUR COMPRESSORE	KOMPRESSOR COMPRESOR
48	F916500030010	⇔ 3903053M1	1	STIRRUP	ETRIER STAFFA	BUEGEL FUACION
49	3903054M1		1	PLATE	PLAQUE PIASTRA	PLATTE PLATO
50	F312500030300	⇔ 3903059M91	1	BOTTOM PART	PIECE INFERIEURE PARTE INFERIORE	UNTERTEIL PIEZA DE PISO
51	3000193X1	M8	1	NUT	ECROU DADO	MUTTER TUERCA

Seat
Siege
Fahrersitz
Sedile
Asiento

110-235

Air Pressure Seat With Automatic Adjustment - Luxuy
Siege Pneumatique Avec Reglage Automatique - De Luxe
Luftpolsterungsitz Mit Automatischeinstellung - Luxus
Sedile Pneumatico Con Aggiustatore Automatico - Lusso
Asiento Pneumatico Con Ajuste Automatico - Lujo

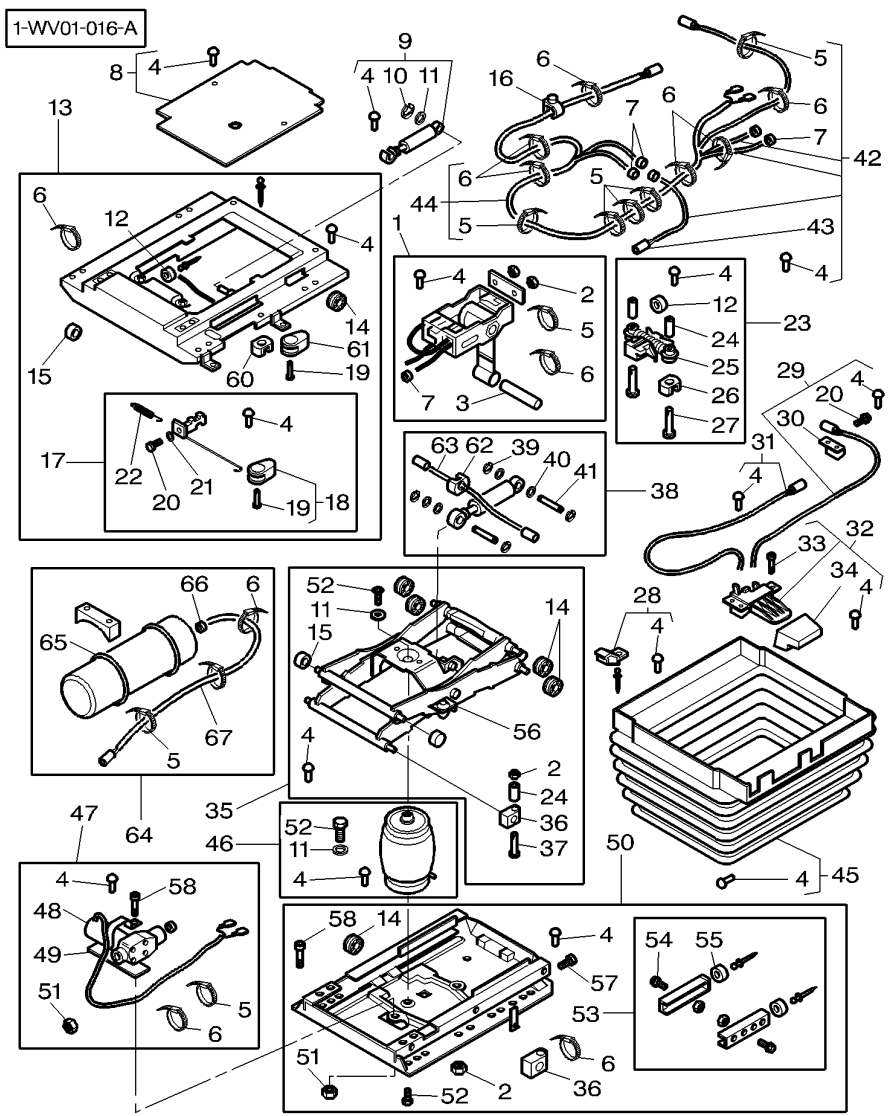

52	F312500030110	M8x20	**2**	SCREW	VIS VITE	SCHRAUBE TORNILLO
53	F930500030130	<> 3903062M1	**1**	STOP	BUTEE STOP	ANSCHLAG PARO
54	3101996M1	M8x16	**2**	SCREW SPECIAL	VIS SPECIALE VITE SPECIALE	SPEZIALSCHRAUBE TORNILLO ESPEC.
55	3102401M1		**2**	BUFFER	BUTOIR RESPINGENTE	PUFFER PARACHOQUES
56	F158500030010	<> 1719867M1	**2**	BUFFER	BUTOIR RESPINGENTE	PUFFER PARACHOQUES
57	3000926X1	M5x10	**1**	SCREW	VIS VITE	SCHRAUBE TORNILLO
58	3903480M1	M8x12	**1**	SCREW	VIS VITE	SCHRAUBE TORNILLO
59	3903135M91	[AB]	**1**	KIT, REPAIR	JEU REPARATION KIT RIPARAZIONE	REPARATURSATZ JUEGO REPARACION
60	F716501030690		**1**	GUIDE	GUIDE GUIDA	FUEHRUNG GUIA
61	F716501030680		**1**	HANDLE	MANCHE IMPUGNATURA	GRIFF EMPUNADURA
62	F716501030700		**1**	SUPPORT	SUPPORT SOPPORTO	TRAGER SOPORTE
63	F716501030710		**1**	BOWDEN CABLE	CABLE BOWDEN CAVO BOWDEN	BOWDENZUG CABLE BOWDEN
64	3903827M91		**1**	ACCUMULATOR	ACCUMULATEUR ACCUMULATORE	AKKUMULATOR ACUMULADOR
65	F205500035210	7.6x387	**2**	CABLE TIE	ATTACHE CABLE FASCETTA CAVI	KABELBINDER APRIETACABLES
66	3903824M1		**2**	CLAMP	COLLIER FASCETTA	HALTESCHELLE ABRAZADERA
67*	F930500030180		**1**	HOSE	DURITE TUBO FLESSIBILE	SCHLAUCH TUBO DE GOMA

[A] INCLUDE ITEM 2/4/5/6/11/12/14/15/24/25/ 26/36/51/52/53/56/58
COMPREND L'ITEM 2/4/5/6/11/12/14/15/24/25/ 26/36/51/52/53/56/58
BEINHALTET POS NR. 2/4/5/6/11/12/14/15/24/25/ 26/36/51/52/53/56/58
INCLUDE IL NUMERO 2/4/5/6/11/12/14/15/24/25/ 26/36/51/52/53/56/58
INCLUYE EL NO 2/4/5/6/11/12/14/15/24/25/ 26/36/51/52/53/56/58

[B] NOT ILLUSTRATED
NON ILLUSTRE
NICHT ILLUSTRIERT
NON ILLUSTRATO
NO ILUSTRADO

Seat Belt
Ceinture De Securite
Sicherheitsgurt
Cintura Sicurezza
Cinturon De Seguridad

110-240

1-WZ02-001-B

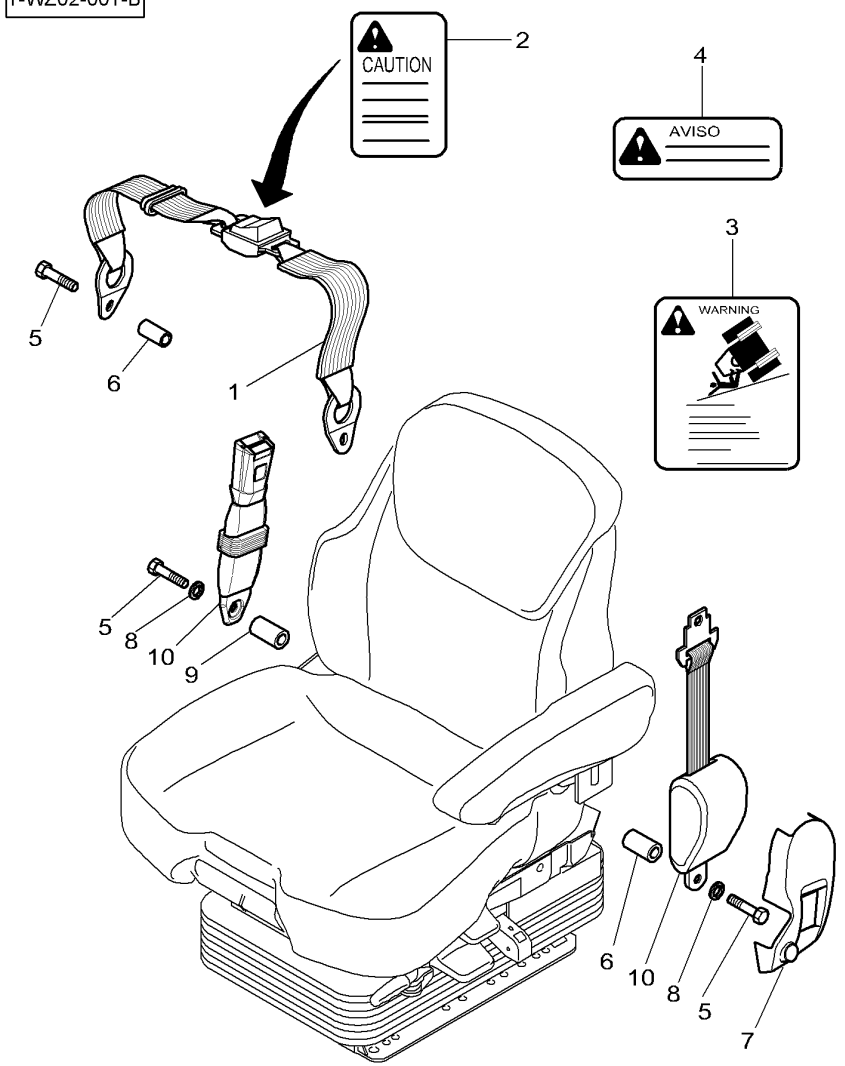

1	3785693M91	➡ R011025	**1**	SAFETY BELT	CEINTURE DE PROT CINTURA DI SOST.	SICHERHEITSGURT CINTURON
2	523784M3	GB	**1**	DECAL	DECALCOMANIE DECALCOMANIA	AUFKLEBER CALCOMANIA
3	3760678M1	GB	**1**	DECAL	DECALCOMANIE DECALCOMANIA	AUFKLEBER CALCOMANIA
4			**X**	NOT USED	NON UTILISE INUSATO	NICHT VERWENDET NO SE USA
5	361530X1		**2**	BOLT UNF	BOULON UNF BULLONE UNF	MASCH.SCHRB.UNF PERNO UNF
6	3011445X1	➡ R011025	**2**	SPACER	ENTRETOISE DISTANZIALE	ABSTANDSTUECK DISCO ESPACIADOR
6	3011445X1	➡ R011026	**1**	SPACER	ENTRETOISE DISTANZIALE	ABSTANDSTUECK DISCO ESPACIADOR
7	4272529M1		**1**	COVER	COUVERCLE COPERCHIO	ABDECKUNG. CUBIERTA
7	4272528M1	[B]	**1**	COVER	COUVERCLE COPERCHIO	ABDECKUNG. CUBIERTA
8	353772X1	➡ R011026	**2**	WASHER	RONDELLE RONDELLA	SCHEIBE ARANDELA
9	4285549M1	➡ R011026	**1**	SPACER	ENTRETOISE DISTANZIALE	ABSTANDSTUECK DISCO ESPACIADOR
10	4285547M1	➡ R011026	**1**	SAFETY BELT	CEINTURE DE PROT CINTURA DI SOST.	SICHERHEITSGURT CINTURON

[B] WITHOUT SEAT BELT
SANS CEINTURE DE SECURITE
OHNE SICHERHEITSQURT
SENSA CINTURA SICUREZZA
SIN CINTURON DE SEGURIDAD

Secondary Seat
Siege Secondaire
Beifahrersitz
Sedile Secondario
Asiento

110-245

PLANCHES EN COURS D'ILLUSTRATION

1*	4271015M92	(US)	**1**	SEAT	SIEGE SEDILE	SITZ ASIENTO
1*	4280078M91	(US)	**1**	SEAT	SIEGE SEDILE	SITZ ASIENTO
2*	4271010M91	1	**1**	CUSHION	COUSSIN CUSCINO	POLSTER COJIN
3*	4270581M1	1 (US)	**1**	SUPPORT	SUPPORT SOPPORTO	TRAGER SOPORTE
3*	4276500M1	1 (US)	**1**	SUPPORT	SUPPORT SOPPORTO	TRAGER SOPORTE
4*	4280079M91	1 (US)	**1**	CUSHION	COUSSIN CUSCINO	POLSTER COJIN
4*	4271013M92	1 (US)	**1**	CUSHION	COUSSIN CUSCINO	POLSTER COJIN
5	3713140M1	1	**9**	SCREW	VIS VITE	SCHRAUBE TORNILLO
6	4270583M1	1	**1**	STAND	BEQUILLE CAVALLETTO	STANDER CABALLETE
7	4270579M1	1	**1**	SUPPORT	SUPPORT SOPPORTO	TRAGER SOPORTE
8	3616277M1		**1**	HELMET	CAPUCHON CASCO	SCHUTZHELM CASCO
9	339123X1	M8 X 20	**1**	HEX. SOCK. SCREW	VIS TETE HEX VITE PARKER	ZYLINDERSCHRAUBE TORN.CAB.HUECA
10	390972X1	∅ 8-17 X 1,7	**1**	FLAT WASHER	RONDELLE PLATE RONDELLE PIANA	UNTERLEGSCHEIBEN ARANDELA PLANA
11	4271528M1		**1**	FOOT REST	REPOSE PIED SUPPORTO PIEDE	FUSSTUETZE REPOSAPIES
12	1440022X1	M8 X 20	**2**	STUD	GOUJON SPINOTTO FILETT.	STEHBOLZEN ESPARRAGO ROSCA.
13	3010467X1	∅ 8-30 X 2	**2**	WASHER	RONDELLE RONDELLA	SCHEIBE ARANDELA
14	394367X1	M8	**2**	NUT	ECROU DADO	MUTTER TUERCA
15	394367X1	M8	**2**	NUT	ECROU DADO	MUTTER TUERCA
16	390972X1	∅ 8-17 X 1,7	**2**	FLAT WASHER	RONDELLE PLATE RONDELLE PIANA	UNTERLEGSCHEIBEN ARANDELA PLANA
17	353558X1	7/16"-20 X 16	**2**	BOLT UNF	BOULON UNF BULLONE UNF	MASCH.SCHRB.UNF PERNO UNF
18	3789236M1		**1**	SAFETY BELT	CEINTURE DE PROT CINTURA DI SOST.	SICHERHEITSGURT CINTURON
19	338600X1	7/16"-20	**1**	NUT UNF	ECROU UNF DADO UNF	MUTTER UNF TUERCA UNF
20	3715118M1		**1**	SUPPORT	SUPPORT SOPPORTO	TRAGER SOPORTE
21	353558X1	7/16"-20 X 16	**1**	BOLT UNF	BOULON UNF BULLONE UNF	MASCH.SCHRB.UNF PERNO UNF
22	390972X1	∅ 8-17 X 1,7	**2**	FLAT WASHER	RONDELLE PLATE RONDELLE PIANA	UNTERLEGSCHEIBEN ARANDELA PLANA
23	339123X1	M8 X 20	**2**	HEX. SOCK. SCREW	VIS TETE HEX VITE PARKER	ZYLINDERSCHRAUBE TORN.CAB.HUECA

Secondary Seat
Siege Secondaire
Beifahrersitz
Sedile Secondario
Asiento

110-245

PLANCHES EN

COURS

D'ILLUSTRATION

23*	339124X1	[A] M8 X 16	**2**	HEX. SOCK. SCREW	VIS TETE HEX VITE PARKER	ZYLINDERSCHRAUBE TORN.CAB.HUECA
24*	3787683M1	US	**1**	DECAL	DECALCOMANIE DECALCOMANIA	AUFKLEBER CALCOMANIA
25*			**X**	NOT USED	NON UTILISE INUSATO	NICHT VERWENDET NO SE USA
26*	4275041M2	∅ 10 ➡ S018028	**X**	BUTTON	BOUTON BOTTONE	KNOPFTASTE BOTON

[A] WITHOUT SEAT BELT
SANS CEINTURE DE SECURITE
OHNE SICHERHEITSQURT
SENSA CINTURA SICUREZZA
SIN CINTURON DE SEGURIDAD

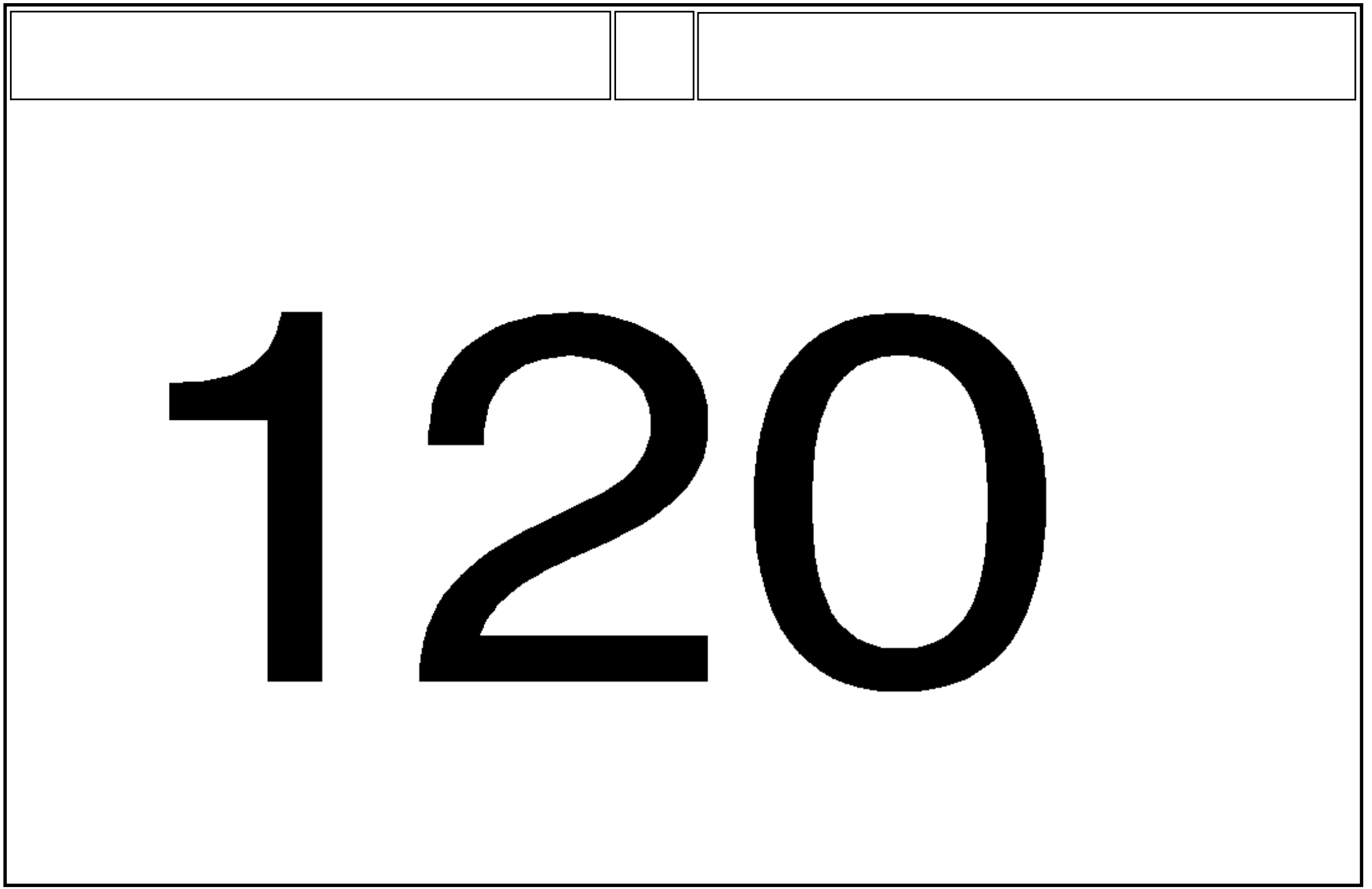
120

Lighting Equipment	Front
Eclairage	Avant
Beleuchtungsanlage	Vorderseite
Equipaggiamento Illuminazione	Frontale
Equipo Alumbrado	Frontal

120-5

North America Only
Amerique Du Nord Seulement
Nur Fuer Nordamerika
Solo Per Nord America
Norte America Solamente

1-WW02-017-A

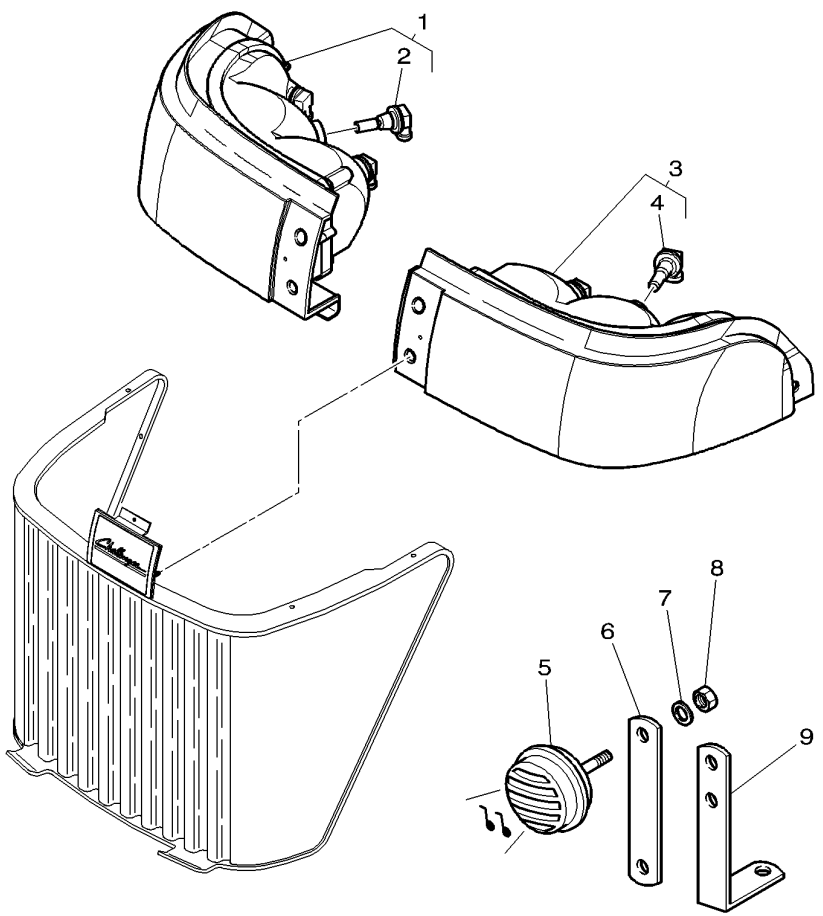

1	5017894M2	▶	**1**	HEAD LIGHT	PHARE FARO	SCHEINWERFER FARO
2	**CH175-1323**	1 12V 55W ⇔ 175-1323	**3**	BULB	AMPOULE BULBO	GLUEHLAMPE BOMBILLA
3	5017895M2	◀	**1**	HEAD LIGHT	PHARE FARO	SCHEINWERFER FARO
4	**CH175-1323**	3 12V 55W ⇔ 175-1323	**3**	BULB	AMPOULE BULBO	GLUEHLAMPE BOMBILLA
5	1678404M1		**1**	HORN	AVERTISSEUR AVVISATORE ACUST	HORN BOCINA
6	3778841M2		**1**	STRAP	PATTE CORREGGIA	LASCHE FAJA
7	339374X1		**1**	LOCK WASHER	RONDELLE FREIN RONDELLA ARRESTO	SICHERUNGSRING ARANDELA SEGURID
8	*394367X1		**1**	NUT	ECROU DADO	MUTTER TUERCA
9	656632M4		**1**	BRACKET	SUPPORT FIXATION STAFFETTA	HALTEARM SOPORTE

Lighting Equipment	Front	120-10	
Eclairage	Avant		
Beleuchtungsanlage	Vorderseite		
Equipaggiamento Illuminazione	Frontale		
Equipo Alumbrado	Frontal		

1-WW02-019-A

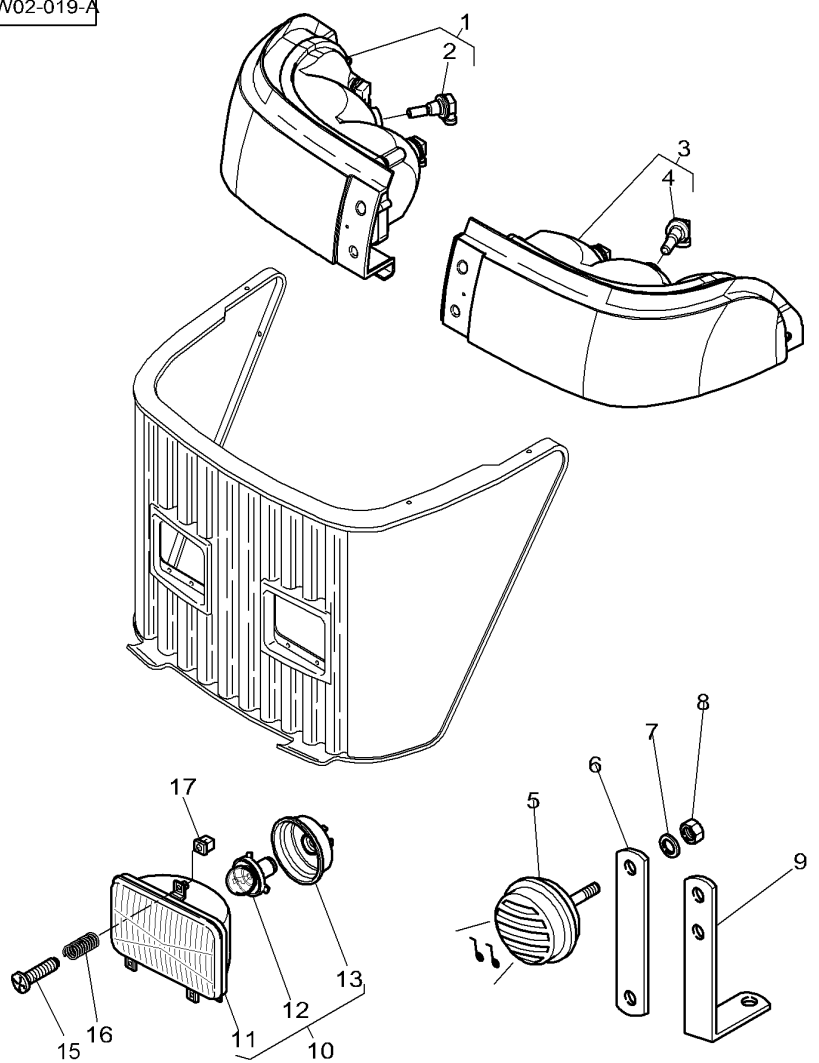

1	5017894M2	▶	**1**	HEAD LIGHT	PHARE FARO	SCHEINWERFER FARO
2	**CH175-1323**	1 12V 55W ⇔ 175-1323	**3**	BULB	AMPOULE BULBO	GLUEHLAMPE BOMBILLA
3	5017895M2	◀	**1**	HEAD LIGHT	PHARE FARO	SCHEINWERFER FARO
4	**CH175-1323**	3 12V 55W ⇔ 175-1323	**3**	BULB	AMPOULE BULBO	GLUEHLAMPE BOMBILLA
5	1678404M1		**1**	HORN	AVERTISSEUR AVVISATORE ACUST	HORN BOCINA
6	3778841M2		**1**	STRAP	PATTE CORREGGIA	LASCHE FAJA
7	339374X1		**1**	LOCK WASHER	RONDELLE FREIN RONDELLA ARRESTO	SICHERUNGSRING ARANDELA SEGURID
8	✱394367X1		**1**	NUT	ECROU DADO	MUTTER TUERCA
9	656632M4		**1**	BRACKET	SUPPORT FIXATION STAFFETTA	HALTEARM SOPORTE
10	**3713799M91**	[A]	**2**	HEADLAMP	PHARE AVANT LAMPADA	FAHRSCHEINWERFER FARO DELANTERO
10	**3713798M91**	[B]	**2**	HEADLAMP	PHARE AVANT LAMPADA	FAHRSCHEINWERFER FARO DELANTERO
11		11 REP. NO 10	**1**	HOUSING	CARTER CARCASSA	GEHAEUSE ALOJAMIENTO
12	961866M1	11	**1**	BULB H/L 45/40W	AMPOULE 45/40W BULBO 45/40W HL	GLUEHL.45/40W BOMBFARO 45/40W
13	3388264M1	11	**1**	CAP	CHAPEAU CAPUCHON	KAPPE TAPA
15	4274756M1	M5X50	**6**	SCREW SPECIAL	VIS SPECIALE VITE SPECIALE	SPEZIALSCHRAUBE TORNILLO ESPEC.
16	4274757M1		**6**	SPRING	RESSORT MOLLA	FEDER MUELLE
17	3809347M1		**6**	NUT	ECROU DADO	MUTTER TUERCA

[A] FOR R.H DRIVING
CIRCULATION A DROITE
FUER RECHTE FAHREN
PER CIRCULACION DESTRA
PARA CIRCULACION DERECHO

[B] LEFT DRIVING
CIRCULATION A GAUCHE
VERKEHR LINKS
CIRCULAZIONE A SINISTRA
CIRCULACION A LA IZQUIERDA

Lighting Equipment	Front	120-15	
Eclairage	Avant		
Beleuchtungsanlage	Vorderseite		
Equipaggiamento Illuminazione	Frontale		
Equipo Alumbrado	Frontal		

1-WW02-009-A

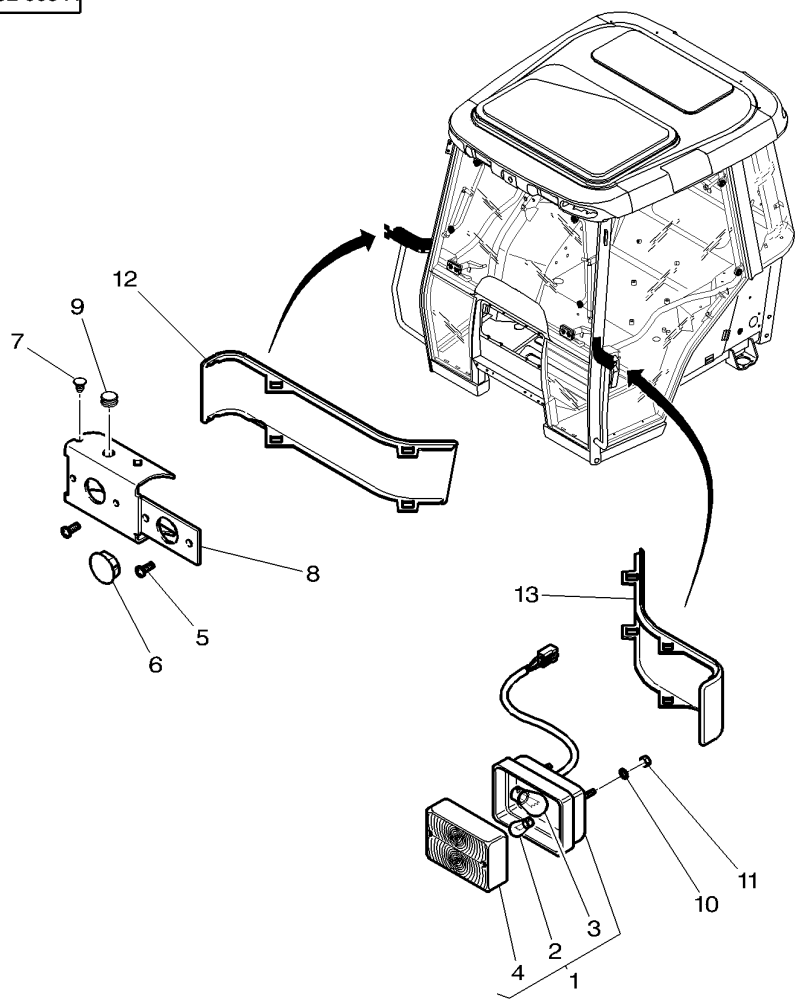

1*	3786791M92	μS	**2**	CONTOUR LIGHT	FEUX DE POSITION CONTOUR LIGHT	UMRISSLEUCHTE CONTOUR LIGHT
2	1420037M1	1	**1**	BULB 12V 5W	AMPOULE 12V 5W BULBO 12V 5W	GLUEHL 12V 5W BOMBILLA 12V 5W
3	621235M1	1	**1**	BULB 12V 21W	AMPOULE 12V 21W BULBO 12V 21W	GLUEHL 12V21W BOMB 12V 21W
4	3105505M1	1	**1**	LENS	LENTILLE LENTE	LINSE LENTE DE VIDRIO
5	3010578X1	M5 X 10	**8**	SCREW	VIS VITE	SCHRAUBE TORNILLO
6	3596314M1		**3**	PLUG	BOUCHON TAPPO	STOPFEN TAPON
7	4275043M1	∅ 6	**6**	PLUG	BOUCHON TAPPO	STOPFEN TAPON
8*	4273311M1	▶	**1**	SUPPORT	SUPPORT SOPPORTO	TRAGER SOPORTE
9	3042523M1	∅ 10	**1**	PLUG	BOUCHON TAPPO	STOPFEN TAPON
10	390469X1		**4**	FLAT WASHER	RONDELLE PLATE RONDELLE PIANA	UNTERLEGSCHEIBEN ARANDELA PLANA
11	3010477X1	M5	**4**	NUT METRIC	ECROU METRIQUE DADO METRICO	MUTTER METRISCH TUERCA METRICO
12*	4273312M1	▶	**1**	MUFF	CACHE MANICOTTO DEVIAN	FLANSCHMUFFE MANGUITO ACOPLAM
13	4272746M1	◀	**1**	MUFF	CACHE MANICOTTO DEVIAN	FLANSCHMUFFE MANGUITO ACOPLAM

Lighting Equipment	Front
Eclairage	Avant
Beleuchtungsanlage	Vorderseite
Equipaggiamento Illuminazione	Frontale
Equipo Alumbrado	Frontal

120-20

1-WW02-012-A

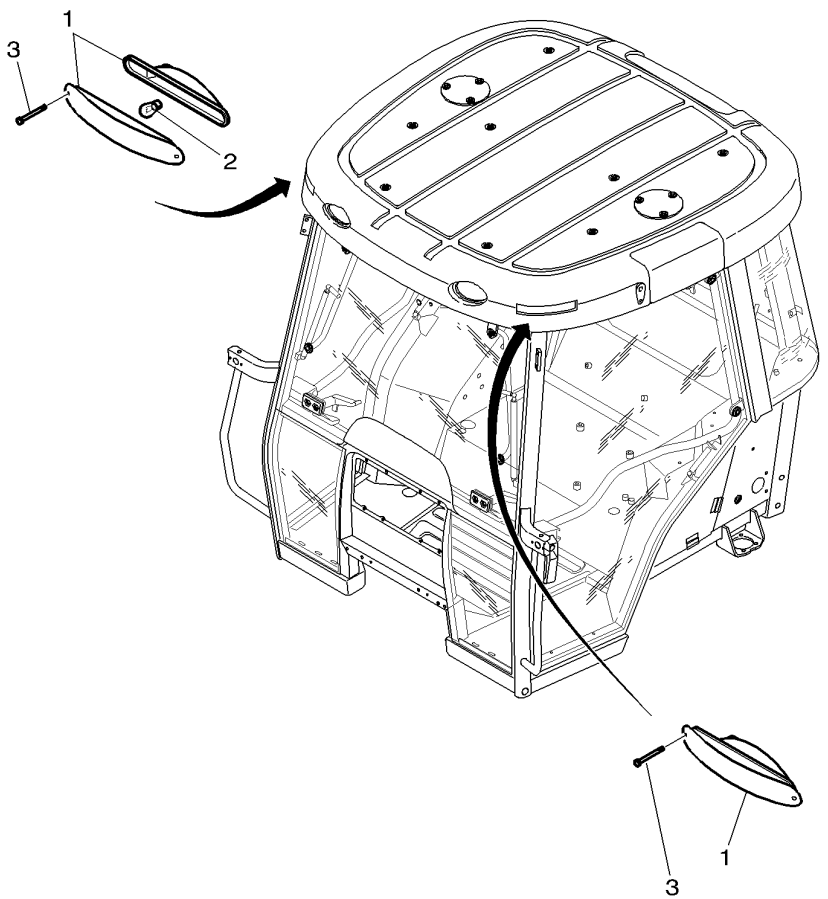

1	5017956M1	◀	**1**	FLASHER	CLIGNOTANT LAMPEGGIANTE	BLINKLICHT DESTELLO
1	5017955M1	▶	**1**	FLASHER	CLIGNOTANT LAMPEGGIANTE	BLINKLICHT DESTELLO
2	4277060M1	12V / 21W	**2**	BULB P/LAMP	LAMPE BULBO E LAMPADA	GLUEHL.ARB.SCH. BOMB LAMP.PILOTO
3*	3009533X1	M4 X 20	**4**	SCREW	VIS VITE	SCHRAUBE TORNILLO

Field Lights
Phare De Travail
Arbeitsscheinwerfer
Luce Illuminazione Campo
Luces De Campo

120-25

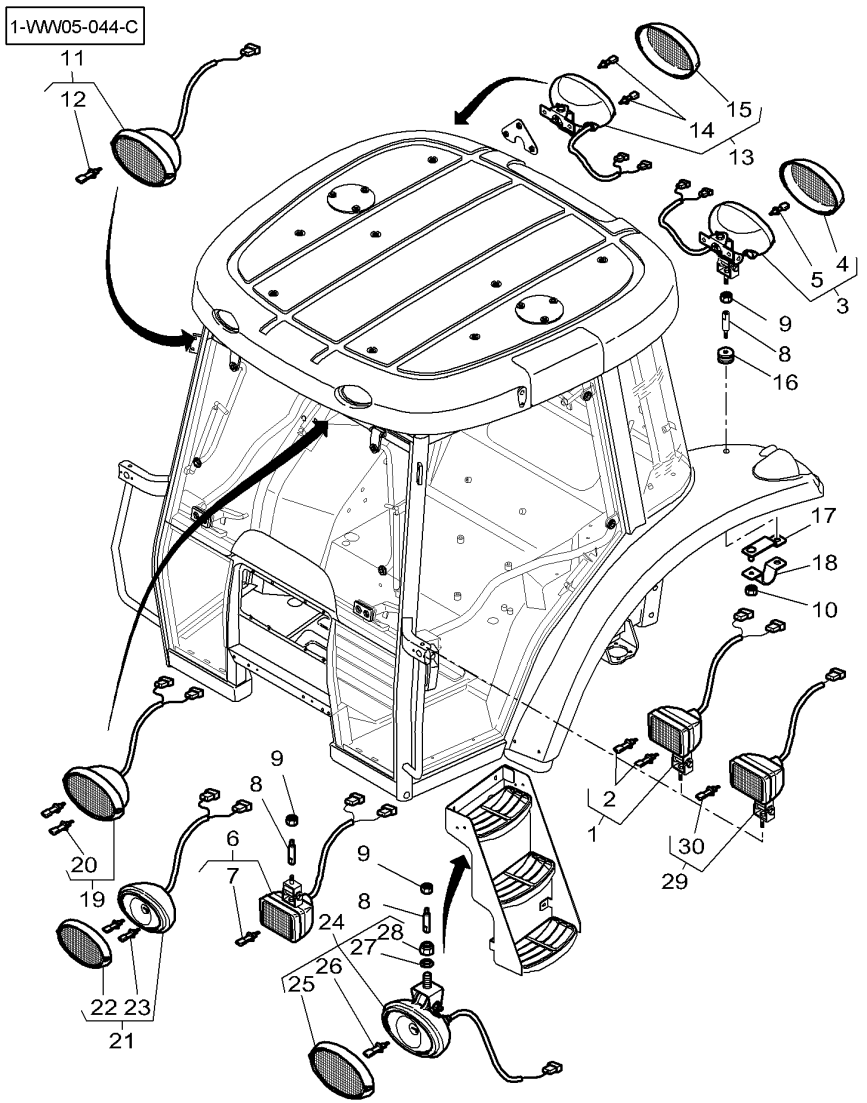

1	4272782M91		**2**	WORKLIGHT	PHARE TRAVAIL LUCE DI LAVORO	ARBEITSSCHEINWER FARO DE TRABAJO
2	**1628494M1**	1 12V-55W	**2**	BULB H3	AMPOULE H3 BULBO H3	GLUEHLAMPE H3 BOMBILLA H3
3	3786668M93		**2**	WORKLIGHT	PHARE TRAVAIL LUCE DI LAVORO	ARBEITSSCHEINWER FARO DE TRABAJO
4	3907280M91	3	**1**	LENS	LENTILLE LENTE	LINSE LENTE DE VIDRIO
5	**1628494M1**	3 12V-55W	**1**	BULB H3	AMPOULE H3 BULBO H3	GLUEHLAMPE H3 BOMBILLA H3
6	4272783M92		**2**	WORKLIGHT	PHARE TRAVAIL LUCE DI LAVORO	ARBEITSSCHEINWER FARO DE TRABAJO
7	**1628494M1**	6 12V-55W	**1**	BULB H3	AMPOULE H3 BULBO H3	GLUEHLAMPE H3 BOMBILLA H3
8	5016887M2		**3**	SPACER	ENTRETOISE DISTANZIALE	ABSTANDSTUECK DISCO ESPACIADOR
9	339402X1	M10	**3**	NUT SPECIAL	ECROU SPECIAL DADO SPECIALE	SPEZIALMUTTER TUERCA ESPECIAL
10	339169X1	M8	**4**	NUT	ECROU DADO	MUTTER TUERCA
11	3786664M91		**2**	WORKLIGHT	PHARE TRAVAIL LUCE DI LAVORO	ARBEITSSCHEINWER FARO DE TRABAJO
12	**1628494M1**	11	**1**	BULB H3	AMPOULE H3 BULBO H3	GLUEHLAMPE H3 BOMBILLA H3
13	3786666M91		**2**	WORKLIGHT	PHARE TRAVAIL LUCE DI LAVORO	ARBEITSSCHEINWER FARO DE TRABAJO
14	**1628494M1**	13 12V-55W	**2**	BULB H3	AMPOULE H3 BULBO H3	GLUEHLAMPE H3 BOMBILLA H3
15	3907064M1	13	**1**	LENS	LENTILLE LENTE	LINSE LENTE DE VIDRIO
16	70921230	∅ 27-35	**4**	GROMMET	PASSE FIL ANELLO PASSACAVO	GUMMITUELLE PASACABLE
17	4273760M1		**2**	BRIDLE	BRIDE BRIGLIA	LASCHENSPANNBAND BRIDA
18	4273761M2		**2**	BRIDLE	BRIDE BRIGLIA	LASCHENSPANNBAND BRIDA
19	3786665M91		**2**	WORKLIGHT	PHARE TRAVAIL LUCE DI LAVORO	ARBEITSSCHEINWER FARO DE TRABAJO
20	**1628494M1**	19 12V - 55W	**2**	BULB H3	AMPOULE H3 BULBO H3	GLUEHLAMPE H3 BOMBILLA H3
21	4276983M91	[B] US	**2**	WORKLIGHT	PHARE TRAVAIL LUCE DI LAVORO	ARBEITSSCHEINWER FARO DE TRABAJO
22	3907064M1	21	**1**	LENS	LENTILLE LENTE	LINSE LENTE DE VIDRIO
23	**1628494M1**	21 12V - 55W	**1**	BULB H3	AMPOULE H3 BULBO H3	GLUEHLAMPE H3 BOMBILLA H3
24	3788699M93		**2**	WORKLIGHT	PHARE TRAVAIL LUCE DI LAVORO	ARBEITSSCHEINWER FARO DE TRABAJO
25	3907280M91	24	**1**	LENS	LENTILLE LENTE	LINSE LENTE DE VIDRIO
26	**1628494M1**	24 12V - 55W	**1**	BULB H3	AMPOULE H3 BULBO H3	GLUEHLAMPE H3 BOMBILLA H3

Field Lights
Phare De Travail
Arbeitsscheinwerfer
Luce Illuminazione Campo
Luces De Campo

120-25

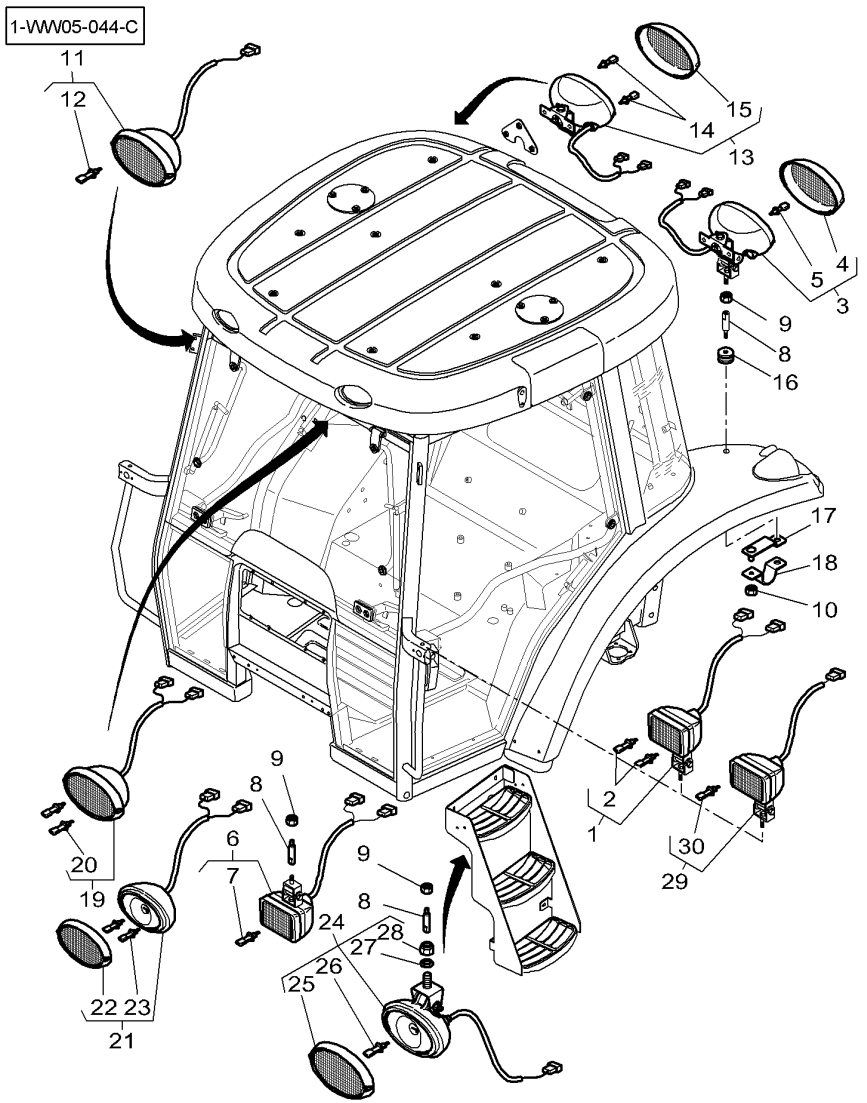

27	1441075X1	24	**1**	CUP SPRING	RONDELLE RESSORT MOLLA CAPPELLOTT	TELLERFEDER CUBETA DE MUELLE
28	1440329X1	24 M10	**1**	LOCKNUT	ECROU FREIN AUTOBLOCCANTE	SICHERUNGSMUTTER CONTRATUERCA
29*	3786693M92		**2**	HEAD LIGHT	PHARE FARO	SCHEINWERFER FARO
30*	**3713341M1**	29	**1**	BULB 12V 60/55W	AMP H4 60/55 W BULBO 12V 60/55W	GLUEHL 12V60/55W BOMBILLA12V60/55

[B] WITH 2 BULB WORKLIGHT
PHARES DE TRAVAIL A 2 AMPOULES
ARBEISSCHEINWERFER MIT 2 CLUHLAMPE
LUCE CON 2 BULBOS
LUCES CON 2 BOMBILLAS

Field Lights
Phare De Travail
Arbeitsscheinwerfer
Luce Illuminazione Campo
Luces De Campo

120-30

Xenon / Pivoting
Au Xenon / Pivotant
Xenon / Luftpolsterungssitz
Xenon / Girando
Xenon / Redondo

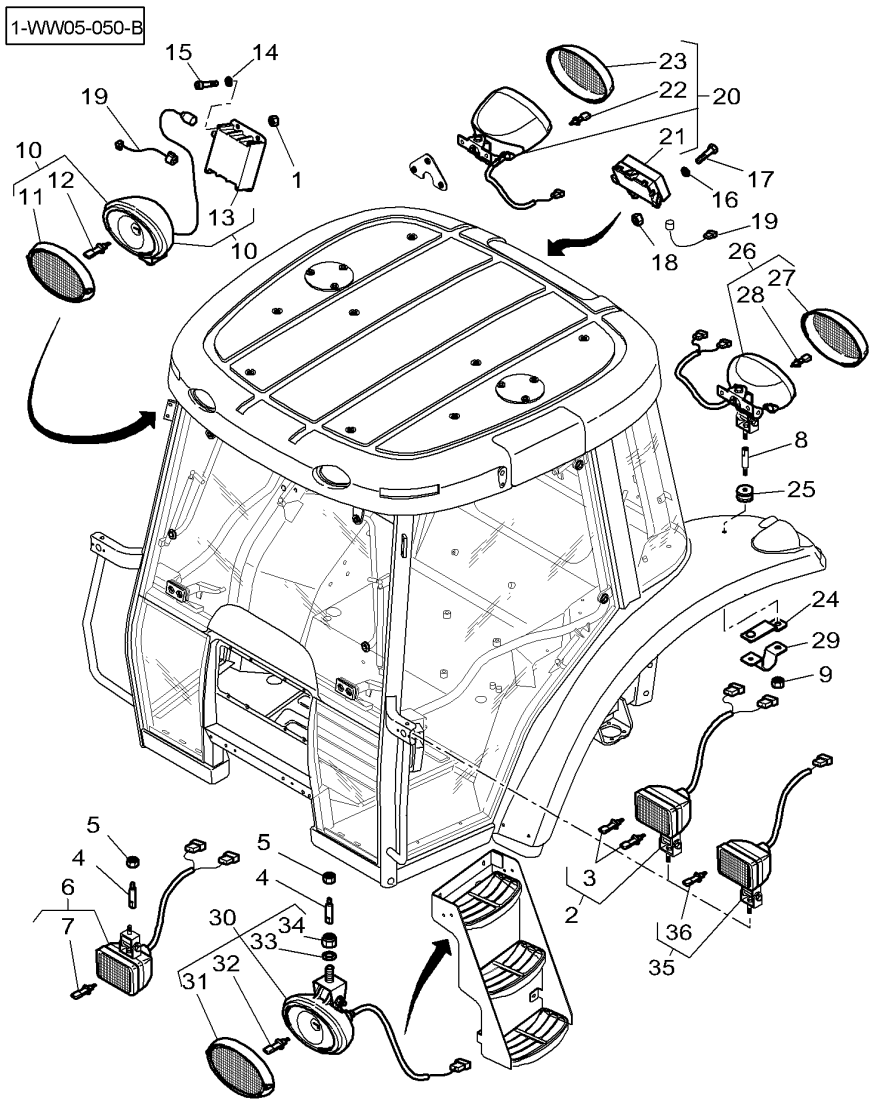

1	1441500X1		M6	**8**	TOP LOCKNUT	ECROU AUTOFREINE DADO DI TESTA	SELBSTS.MUTTER CONTRATUERCA SUP
2	4272782M91			**2**	WORKLIGHT	PHARE TRAVAIL LUCE DI LAVORO	ARBEITSSCHEINWER FARO DE TRABAJO
3	**1628494M1**	2	12V-55W	**2**	BULB H3	AMPOULE H3 BULBO H3	GLUEHLAMPE H3 BOMBILLA H3
4	5016887M2			**1**	SPACER	ENTRETOISE DISTANZIALE	ABSTANDSTUECK DISCO ESPACIADOR
5	339402X1		M10	**1**	NUT SPECIAL	ECROU SPECIAL DADO SPECIALE	SPEZIALMUTTER TUERCA ESPECIAL
6	4272783M92			**2**	WORKLIGHT	PHARE TRAVAIL LUCE DI LAVORO	ARBEITSSCHEINWER FARO DE TRABAJO
7	**1628494M1**	6	12V-55W	**1**	BULB H3	AMPOULE H3 BULBO H3	GLUEHLAMPE H3 BOMBILLA H3
8	5016887M2			**2**	SPACER	ENTRETOISE DISTANZIALE	ABSTANDSTUECK DISCO ESPACIADOR
9	339169X1		M8	**4**	NUT	ECROU DADO	MUTTER TUERCA
10	3788231M91			**2**	HEAD LIGHT	PHARE FARO	SCHEINWERFER FARO
11	3907078M1	10	D2s 12V / 35W	**1**	LENS	LENTILLE LENTE	LINSE LENTE DE VIDRIO
12	**3907077M1**	10		**1**	BULB	AMPOULE BULBO	GLUEHLAMPE BOMBILLA
13	3907075M1	10		**1**	TRANSFORMER	TRANSFORMATEUR TRASFORMATORE	TRANSFORMATOR TRANSFORMADOR
14	390971X1		∅ 6-12 X 1,5	**16**	FLAT WASHER	RONDELLE PLATE RONDELLE PIANA	UNTERLEGSCHEIBEN ARANDELA PLANA
15	3009281X1		M6 X 16	**8**	SCREW	VIS VITE	SCHRAUBE TORNILLO
16	390469X1		∅ 5-10 X 1,5	**6**	FLAT WASHER	RONDELLE PLATE RONDELLE PIANA	UNTERLEGSCHEIBEN ARANDELA PLANA
17	3010506X1		M5 X 16	**6**	SCREW	VIS VITE	SCHRAUBE TORNILLO
18	1441494X1		M5	**6**	NUT METRIC	ECROU METRIQUE DADO METRICO	MUTTER METRISCH TUERCA METRICO
19	4272566M1		◄► 400 MM	**4**	HARNESS	FAISCEAU FASCIOCAVI	KABELBAUM MAZO CABLES
20	3788232M91			**2**	HEAD LIGHT	PHARE FARO	SCHEINWERFER FARO
21	3907383M1	20		**1**	TRANSFORMER	TRANSFORMATEUR TRASFORMATORE	TRANSFORMATOR TRANSFORMADOR
22	**3907384M1**	20		**1**	BULB	AMPOULE BULBO	GLUEHLAMPE BOMBILLA
23	3907385M1	20		**1**	LENS	LENTILLE LENTE	LINSE LENTE DE VIDRIO
24	4273760M1			**2**	BRIDLE	BRIDE BRIGLIA	LASCHENSPANNBAND BRIDA
25	70921230		∅ 27-35	**4**	GROMMET	PASSE FIL ANELLO PASSACAVO	GUMMITUELLE PASACABLE
26	3786668M93			**2**	WORKLIGHT	PHARE TRAVAIL LUCE DI LAVORO	ARBEITSSCHEINWER FARO DE TRABAJO

Field Lights
Phare De Travail
Arbeitsscheinwerfer
Luce Illuminazione Campo
Luces De Campo

120-30

Xenon / Pivoting
Au Xenon / Pivotant
Xenon / Luftpolsterungssitz
Xenon / Girando
Xenon / Redondo

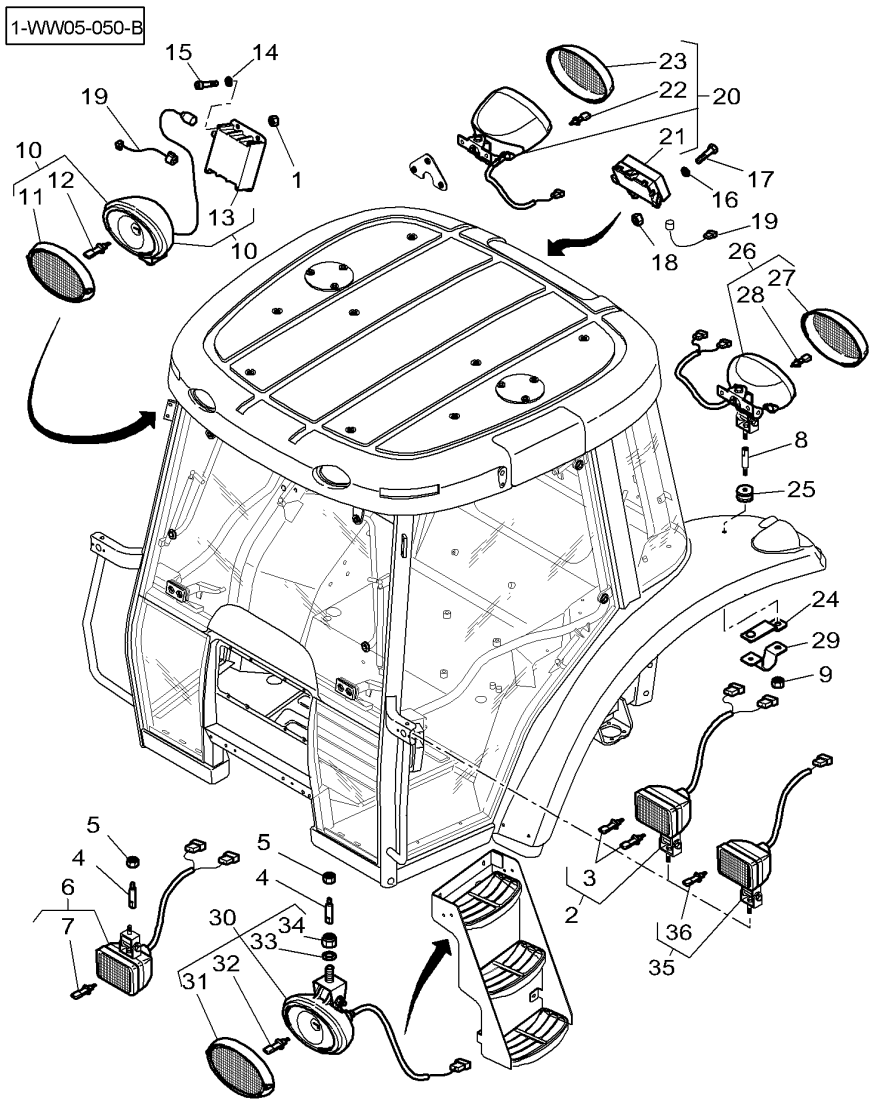

27	3907280M91	26	**1**	LENS	LENTILLE LENTE	LINSE LENTE DE VIDRIO
28	**1628494M1**	26 12V-55W	**1**	BULB H3	AMPOULE H3 BULBO H3	GLUEHLAMPE H3 BOMBILLA H3
29	4273761M2		**2**	BRIDLE	BRIDE BRIGLIA	LASCHENSPANNBAND BRIDA
30	3788699M93		**2**	WORKLIGHT	PHARE TRAVAIL LUCE DI LAVORO	ARBEITSSCHEINWER FARO DE TRABAJO
31	3907280M91	30	**1**	LENS	LENTILLE LENTE	LINSE LENTE DE VIDRIO
32	**1628494M1**	30 12V-55W	**1**	BULB H3	AMPOULE H3 BULBO H3	GLUEHLAMPE H3 BOMBILLA H3
33	1441075X1	30	**1**	CUP SPRING	RONDELLE RESSORT MOLLA CAPPELLOTT	TELLERFEDER CUBETA DE MUELLE
34	1440329X1	30 M10	**1**	LOCKNUT	ECROU FREIN AUTOBLOCCANTE	SICHERUNGSMUTTER CONTRATUERCA
35*	3786693M92		**2**	HEAD LIGHT	PHARE FARO	SCHEINWERFER FARO
36*	**3713341M1**	35	**1**	BULB 12V 60/55W	AMP H4 60/55 W BULBO 12V 60/55W	GLUEHL 12V60/55W BOMBILLA12V60/55

Traffic Warning
Equipement Signalisation
Signalgebungsausstattung
Attrezzatura Segnaletica
Equipamiento Indicacion

120-35

1-WW27-001-B

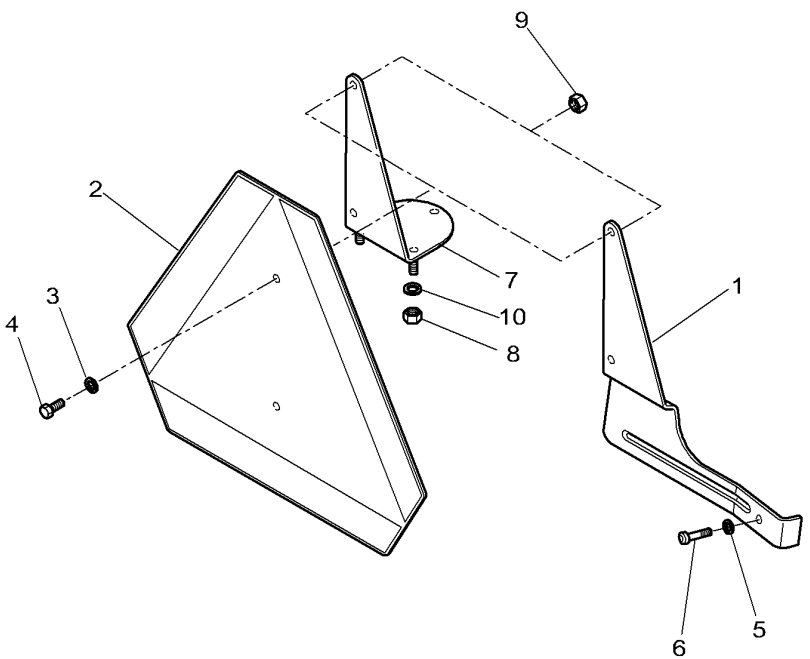

1	4271554M1	➡I R247045	**1**	SUPPORT	SUPPORT SOPPORTO	TRAGER SOPORTE
2*	3712185M1	[A]	**1**	TRIANGLE	TRIANGLE TRIANGOLO	DREIECK TRIANGULO
2*	3789701M1	[B]	**1**	TRIANGLE	TRIANGLE TRIANGOLO	DREIECK TRIANGULO
3	339375X1		**2**	LOCK WASHER	RONDELLE FREIN RONDELLA ARRESTO	SICHERUNGSRING ARANDELA SEGURID
4	339560X1	M6 X 16	**2**	HEX. SOCK. SCREW	VIS TETE HEX VITE PARKER	ZYLINDERSCHRAUBE TORN.CAB.HUECA
5*	4275846M1	➡I R247045 ∅ 6,7-12,2 X 3	**1**	WASHER	RONDELLE RONDELLA	SCHEIBE ARANDELA
6*	4275839M1	➡I R247045 M6 X 35	**1**	SCREW	VIS VITE	SCHRAUBE TORNILLO
7*	4287657M2	➡ R247046	**1**	SUPPORT	SUPPORT SOPPORTO	TRAGER SOPORTE
8*	394367X1	➡ R247046 M8	**3**	NUT	ECROU DADO	MUTTER TUERCA
9*	1441462X1	➡ R247046 M6	**2**	LOCKNUT	ECROU FREIN AUTOBLOCCANTE	SICHERUNGSMUTTER CONTRATUERCA
10*	3010467X1	➡ R247046 ∅ 9-30 X 2	**3**	WASHER	RONDELLE RONDELLA	SCHEIBE ARANDELA

[A] EEC STANDARD
NORME CEE
CEE NORMUNG
UNIFICAZIONE CEE
NORMALIZACION CEE

[B] SAE STANDARD
NORME SAE
SAE NORMUNG
UNIFICAZIONE SAE
NORMALIZACION SAE

Lighting Equipment	Rear	120-40	
Eclairage	Arriere		
Beleuchtungsanlage	Hinterteil		
Equipaggiamento Illuminazione	Posteriore		
Equipo Alumbrado	Trasera		

1-WW03-001-C

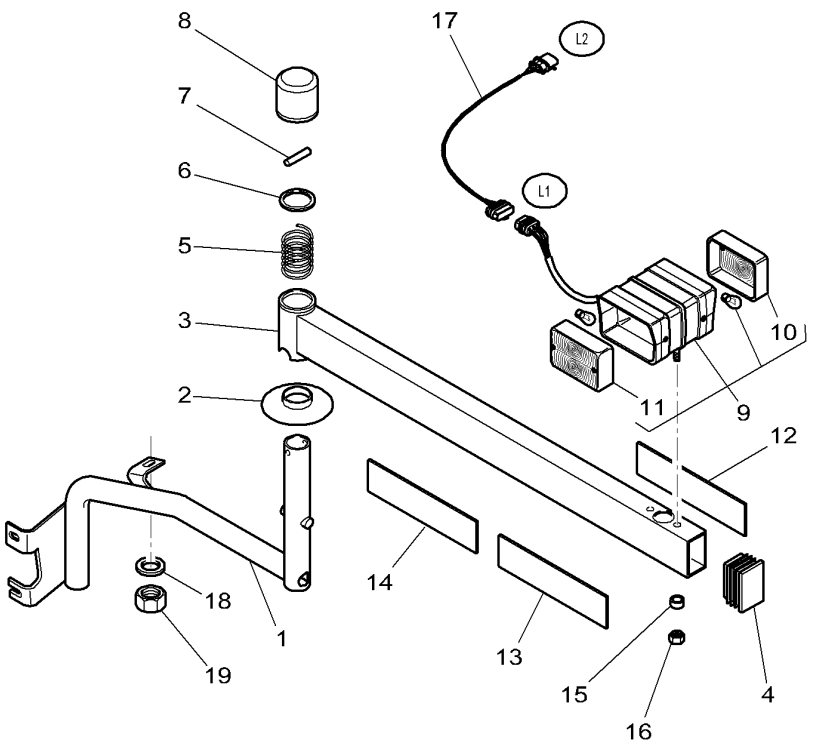

1	4273244M91	◀		**1**	SUPPORT	SUPPORT SOPPORTO	TRAGER SOPORTE
1	4273245M91	▶		**1**	SUPPORT	SUPPORT SOPPORTO	TRAGER SOPORTE
2	3788367M2			**2**	GASKET	JOINT GIUNTO PIANO	FLACHDICHTUNG JUNTA PLANA
3	3788385M93	◀		**1**	SUPPORT	SUPPORT SOPPORTO	TRAGER SOPORTE
3	3788386M93	▶		**1**	SUPPORT	SUPPORT SOPPORTO	TRAGER SOPORTE
4	3788368M1			**2**	TAP	OBTURATEUR. TAPPO*	HAHN GRIFO
5	3788364M2			**2**	SPRING	RESSORT MOLLA	FEDER MUELLE
6	3788365M2			**2**	WASHER	RONDELLE RONDELLA	SCHEIBE ARANDELA
7	3019546X1	∅	8 X 45	**2**	SPIROL PIN	GOUPILLE SPIRALE SPINA ESPANSIONE	SPIRALSTIFT PASADOR ESPIRAL
8	3788369M1			**2**	PLUG	BOUCHON TAPPO	STOPFEN TAPON
9	3788465M2			**2**	LIGHT	FEU FARO.	LEUCHTE LAMPARA/LUZ
10	3907168M91	9		**1**	LENS	LENTILLE LENTE	LINSE LENTE DE VIDRIO
11	3310902M91	9		**1**	LENS	LENTILLE LENTE	LINSE LENTE DE VIDRIO
12	3788462M1	[A]		**2**	REFLECTINGMIRROR	REFLECTEUR SPECCHIO RIFLET.	SPIEGELREFLEKTOR ESPEJO DE REFLEX
13	3788461M1	[B]		**2**	REFLECTINGMIRROR	REFLECTEUR SPECCHIO RIFLET.	SPIEGELREFLEKTOR ESPEJO DE REFLEX
14	3788460M1	[C]		**2**	REFLECTINGMIRROR	REFLECTEUR SPECCHIO RIFLET.	SPIEGELREFLEKTOR ESPEJO DE REFLEX
15	3580848M1	∅	11-20 X 14,5	**4**	SPACER	ENTRETOISE DISTANZIALE	ABSTANDSTUECK DISCO ESPACIADOR
16	339169X1	M8		**4**	NUT	ECROU DADO	MUTTER TUERCA
17	4274333M1			**2**	HARNESS	FAISCEAU FASCIOCAVI	KABELBAUM MAZO CABLES
18	391039X1			**2**	FLAT WASHER	RONDELLE PLATE RONDELLE PIANA	UNTERLEGSCHEIBEN ARANDELA PLANA
19	394367X1	M8		**2**	NUT	ECROU DADO	MUTTER TUERCA

[A] YELLOW
JAUNE
GELB
GIALLO
AMARILLO

[B] RED
ROUGE
ROT
ROSSO
ROJO

Lighting Equipment	Rear	120-40	
Eclairage	Arriere		
Beleuchtungsanlage	Hinterteil		
Equipaggiamento Illuminazione	Posteriore		
Equipo Alumbrado	Trasera		

1-WW03-001-C

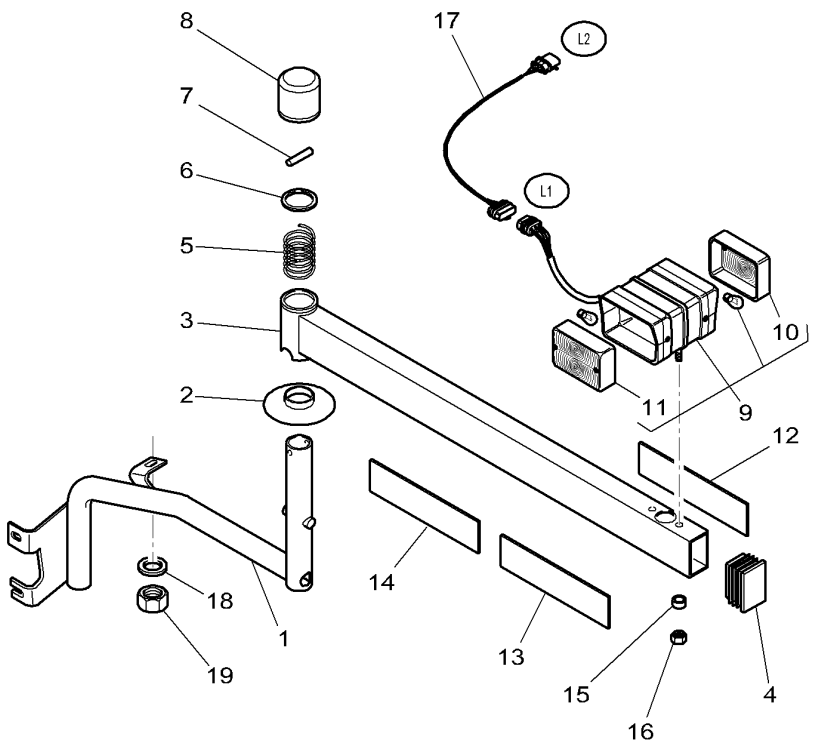

[C] ORANGE
ORANGE
ORANGE
ARANCIONE
ANARANJADO

Lighting Equipment	**Rear**	**120-45**
Eclairage	**Arriere**	
Beleuchtungsanlage	**Hinterteil**	
Equipaggiamento Illuminazione	**Posteriore**	
Equipo Alumbrado	**Trasera**	

1-WW03-028-A

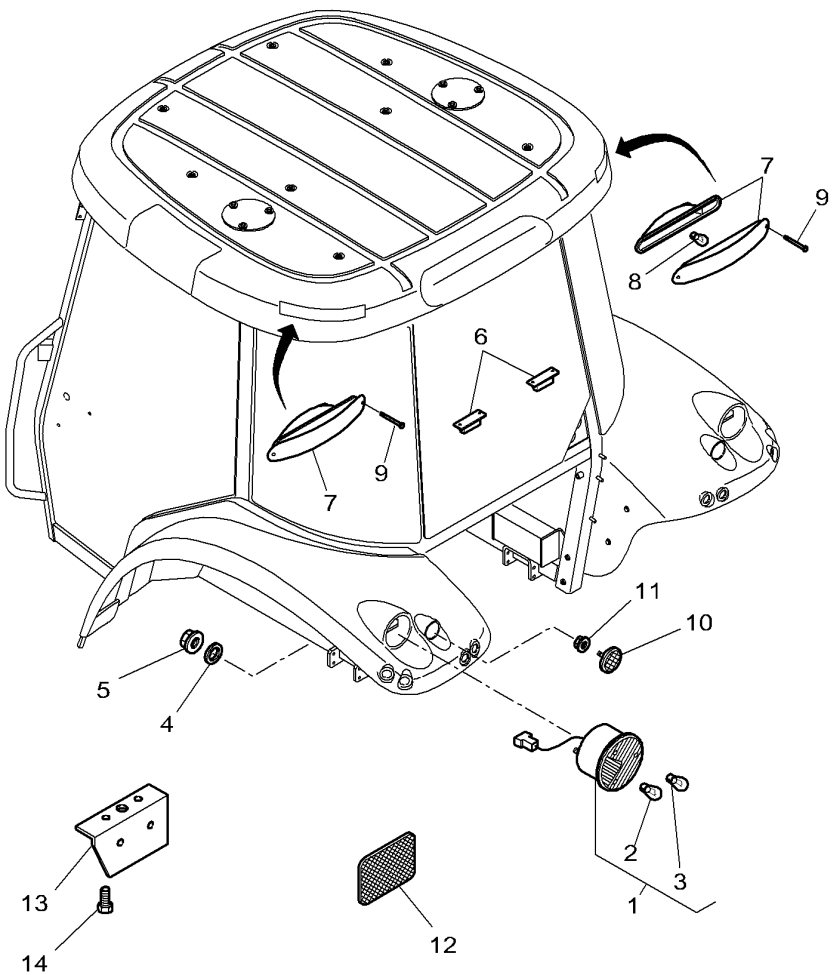

1*	3786689M91	◀	**1**	LH REAR LAMP	FEU AR GAUCHE RETRO LAMPADA SN	RUECKLEUCHTE LI LUZ DE COLA LI
1*	3786690M91	▶	**1**	RH REAR LAMP	FEU AR DROIT LAMPADINA DS POS	RUECKLEUCHTE RE LUZ DE COLA LD
1	3786691M91	◀ (US)	**1**	LH REAR LAMP	FEU AR GAUCHE RETRO LAMPADA SN	RUECKLEUCHTE LI LUZ DE COLA LI
1	3786692M91	▶ (US)	**1**	RH REAR LAMP	FEU AR DROIT LAMPADINA DS POS	RUECKLEUCHTE RE LUZ DE COLA LD
2	621235M1	1	**1**	BULB 12V 21W	AMPOULE 12V 21W BULBO 12V 21W	GLUEHL 12V21W BOMB 12V 21W
3	**908543M1**	1	**1**	BULB S/L 21/5W	AMPOULE 21/5W BULBO 21/5W	GLUEHLAMPE 21/5W BOMB C/I 21/5W
4	390971X1	∅ 6-12 x 1,5	**4**	FLAT WASHER	RONDELLE PLATE RONDELLE PIANA	UNTERLEGSCHEIBEN ARANDELA PLANA
5	1441500X1	M6	**4**	TOP LOCKNUT	ECROU AUTOFREINE DADO DI TESTA	SELBSTS.MUTTER CONTRATUERCA SUP
6	3786670M1		**2**	N/PLATE LAMP	FEU PLAQUE IMMAT LAMPADINA TARGA	KENNZ.LEUCHTE LUZ DE MATRICULA
7	5017958M1	◀	**1**	FLASHER	CLIGNOTANT LAMPEGGIANTE	BLINKLICHT DESTELLO
7	5017957M1	▶	**1**	FLASHER	CLIGNOTANT LAMPEGGIANTE	BLINKLICHT DESTELLO
8	4277060M1	12V - 21W	**2**	BULB P/LAMP	LAMPE BULBO E LAMPADA	GLUEHL.ARB.SCH. BOMB LAMP.PILOTO
9	3009533X1	M4 X 20	**4**	SCREW	VIS VITE	SCHRAUBE TORNILLO
10	4271028M1	∅ 55	**2**	REFLECTOR	CATADIOPTRE CATADIOTTRO	RUECKSTRAHLER LUZ REFRACTANTE
11	3010477X1	M5	**2**	NUT METRIC	ECROU METRIQUE DADO METRICO	MUTTER METRISCH TUERCA METRICO
12	3618951M1		**2**	REFLECTOR	CATADIOPTRE CATADIOTTRO	RUECKSTRAHLER LUZ REFRACTANTE
13*	3052943M2	▶ R291037	**1**	BEARER	SUPPORT PALIER SUPPORTO PORTANT	AUFLAGER DISPOS.PORTADOR
13*	4279180M1	▶ R291038	**1**	SUPPORT	SUPPORT SOPPORTO	TRAGER SOPORTE
13*	3052944M2	◀ R291037	**1**	BEARER	SUPPORT PALIER SUPPORTO PORTANT	AUFLAGER DISPOS.PORTADOR
13*	4279179M1	◀ R291038	**1**	SUPPORT	SUPPORT SOPPORTO	TRAGER SOPORTE
13*	4279179M1		**1**	SUPPORT	SUPPORT SOPPORTO	TRAGER SOPORTE
14	339124X1	M8 X 16	**4**	HEX. SOCK. SCREW	VIS TETE HEX VITE PARKER	ZYLINDERSCHRAUBE TORN.CAB.HUECA

Rotating Light
Gyrophare
Rundumkennleucht
Luce Rotativa
Luz Giratoria

120-50

1-WW11-002-B

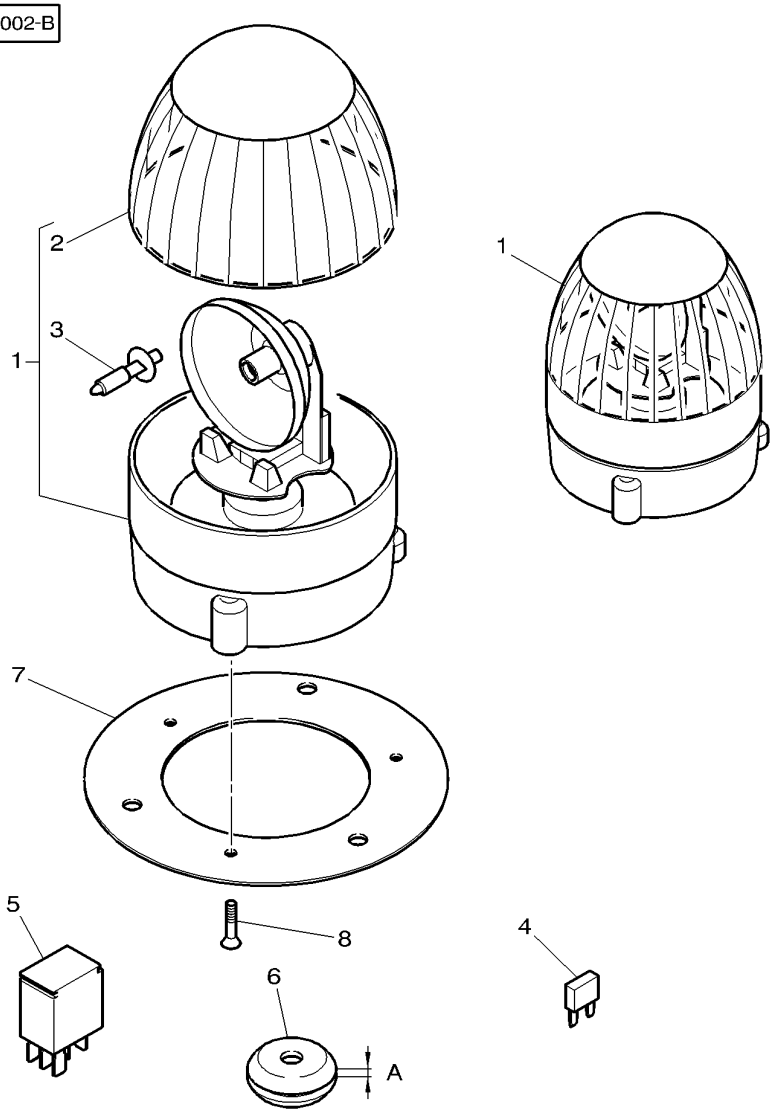

1	5017952M1		**1**	TURNING LIGHT	FEU TOURNANT LUCE ROTANTE	RUNDUMLEUCHTE LUZ ROTATORIA
2	**136-5254**	1	**1**	LENS	LENTILLE LENTE	LINSE LENTE DE VIDRIO
3	***CH9X-8118**	1 12V	**1**	BULB	AMPOULE BULBO	GLUEHLAMPE BOMBILLA
4	**4271800M1**	7,5 A	**1**	FUSE	FUSIBLE FUSIBILE	SICHERUNG FUSIBLE
4	**4271801M1**	10 A	**1**	FUSE	FUSIBLE FUSIBILE	SICHERUNG FUSIBLE
5	**4272431M1**		**1**	RELAY	RELAIS RELE	RELAIS RELE
6	3714694M1	A = 1,5 MM ∅ 7-21	**2**	GROMMET	PASSE FIL ANELLO PASSACAVO	GUMMITUELLE PASACABLE
6	3783677M1	A = 3 MM ∅ 7-21	**1**	GROMMET	PASSE FIL ANELLO PASSACAVO	GUMMITUELLE PASACABLE
7	5017954M1		**1**	SUPPORT	SUPPORT SOPPORTO	TRAGER SOPORTE
8	365924X1	No 10 X 16	**3**	SELF TAP SCREWS	VIS AUTO TARAUD KITAUTOBLOCCANTE	SCHNEIDSCHRAUBEN TORNILLO CHAPA

Front Wheels **Roues Avant** **Vorderraeder** **Ruote Anteriori** **Ruedas Delanteras**	**4 Wheel Drive** **4 Roues Motrices** **Allradantrieb** **4 Ruote Motrici** **4 Ruedas Motrices**	**130-5**

Wheel Hub 10 Holes Assembling
Moyeu De Roues 10 Trous De Fixation
Radnabe 10 Loch Befestigung
Mozzo Ruote 10 Foros Fissazione
Cubo Rueda 10 Orificios Fijacion

1-WL03-004-C

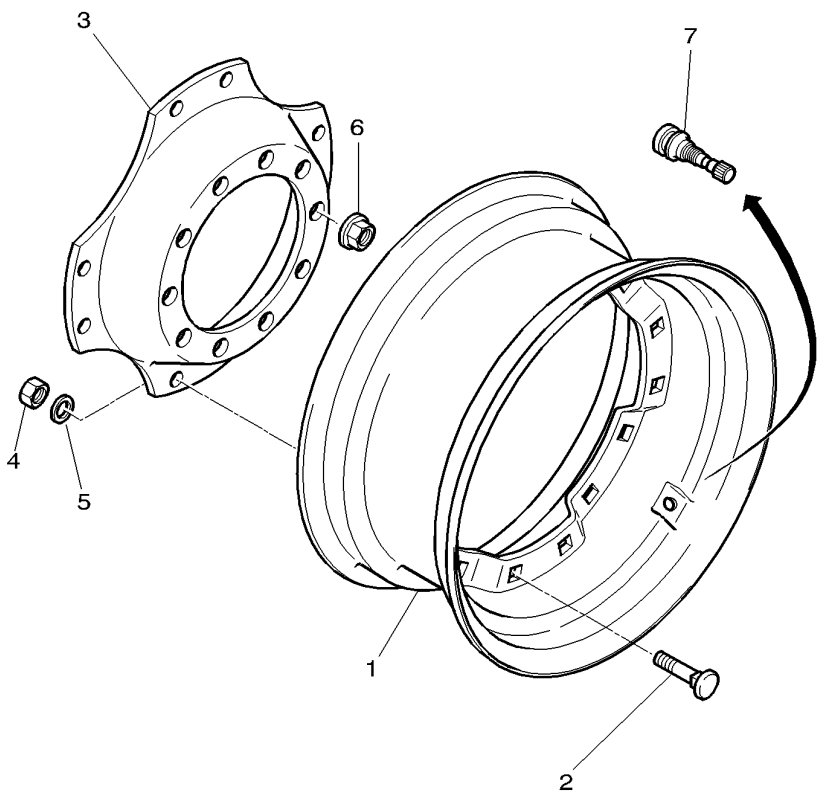

1*	3785778M1	DWW 13 X 30"	**2**	WHEEL RIM	JANTE CERCHIONE	FELGE LLANTA
1	3786087M1	W15L X 34"	**2**	WHEEL RIM	JANTE CERCHIONE	FELGE LLANTA
2	3785847M1	M16 X 40	**16**	SCREW	VIS VITE	SCHRAUBE TORNILLO
3*	3786088M1	34"	**2**	DISC	DISQUE DISCO	SCHEIBE DISCO
4	3785846M1	M16	**16**	NUT	ECROU DADO	MUTTER TUERCA
5	3785848M1	∅ 16,3 X 31,5	**16**	WASHER	RONDELLE RONDELLA	SCHEIBE ARANDELA
6	**3712611M2**	M22	**20**	NUT SPECIAL	ECROU SPECIAL DADO SPECIALE	SPEZIALMUTTER TUERCA ESPECIAL
7	4274219M1		**2**	PRESSURE VALVE	VALVE VALVOLA PRESSION	DRUCKVENTIL VALVULA PRESION

Front Wheels **Roues Avant** **Vorderraeder** **Ruote Anteriori** **Ruedas Delanteras**	**4 Wheel Drive** **4 Roues Motrices** **Allradantrieb** **4 Ruote Motrici** **4 Ruedas Motrices**	**130-10**

Wheel Hub 12 Holes Assembling
Moyeu De Roue 12 Trous Fixation
Radnabe 12 Loch Befestigung
Mozzo Ruote 12 Foros Fissazione
Cubo Rueda 12 Orificios Fijacion

1-WL03-011-A

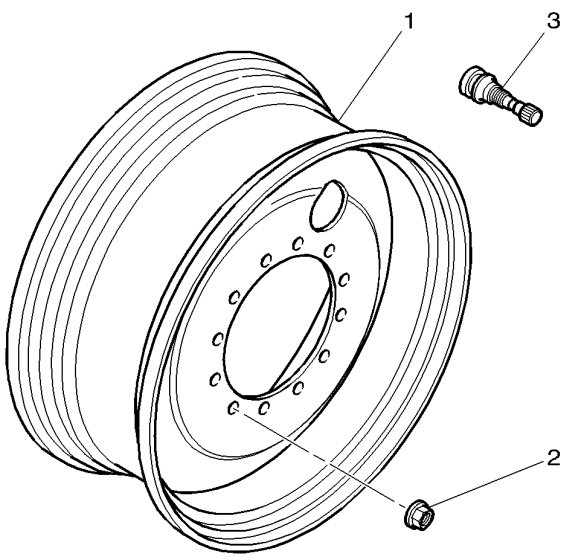

1	3788573M1	DWW 23A X 30"	**2**	WHEEL RIM	JANTE CERCHIONE	FELGE LLANTA
2	**3712611M2**	M22	**24**	NUT SPECIAL	ECROU SPECIAL DADO SPECIALE	SPEZIALMUTTER TUERCA ESPECIAL
3	4274219M1		**2**	PRESSURE VALVE	VALVE VALVOLA PRESSION	DRUCKVENTIL VALVULA PRESION

Front Wheels	4 Wheel Drive	130-15	Wheel Hub 12 Holes Assembling
Roues Avant	4 Roues Motrices		Moyeu De Roue 12 Trous Fixation
Vorderraeder	Allradantrieb		Radnabe 12 Loch Befestigung
Ruote Anteriori	4 Ruote Motrici		Mozzo Ruote 12 Foros Fissazione
Ruedas Delanteras	4 Ruedas Motrices		Cubo Rueda 12 Orificios Fijacion

1-WL03-012-A

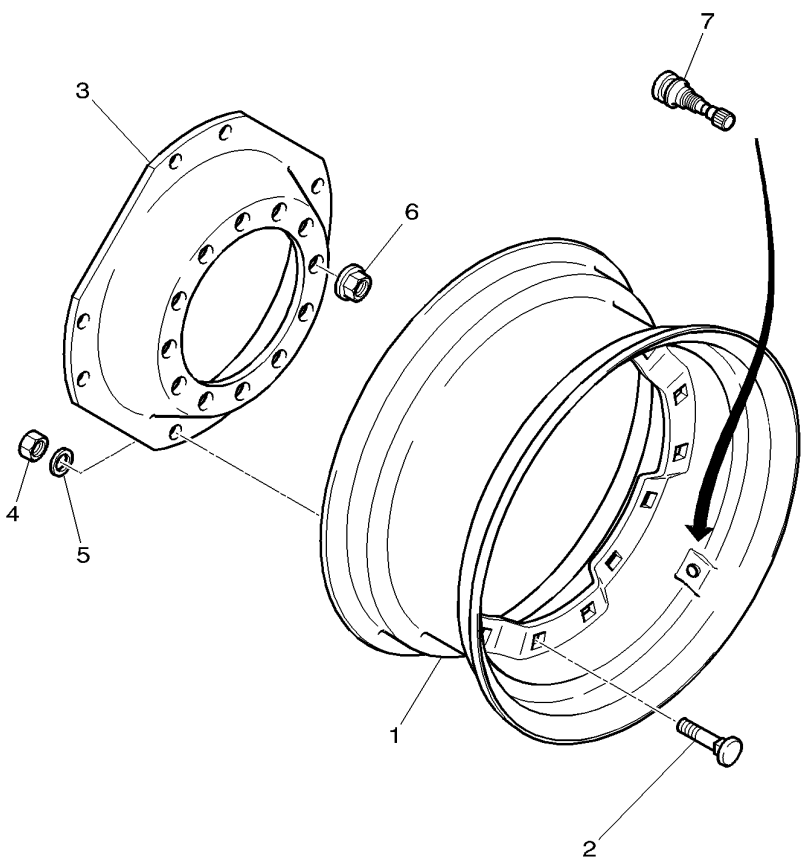

1*	3786087M1	W15L X 34"	**2**	WHEEL RIM	JANTE CERCHIONE	FELGE LLANTA
1*	3786607M1	W18L X 28"	**2**	WHEEL RIM	JANTE CERCHIONE	FELGE LLANTA
1*	3785240M1	DWW 15L X 30"	**2**	WHEEL RIM	JANTE CERCHIONE	FELGE LLANTA
1	3785786M1	W13 X 34"	**2**	WHEEL RIM	JANTE CERCHIONE	FELGE LLANTA
2	3785847M1		**16**	SCREW	VIS VITE	SCHRAUBE TORNILLO
3	3785098M1	34"	**2**	DISC	DISQUE DISCO	SCHEIBE DISCO
3*	4270526M1	28"- 30"	**2**	DISC	DISQUE DISCO	SCHEIBE DISCO
4	3785846M1		**16**	NUT	ECROU DADO	MUTTER TUERCA
5	3785848M1		**16**	WASHER	RONDELLE RONDELLA	SCHEIBE ARANDELA
6	**3712611M2**	M22	**24**	NUT SPECIAL	ECROU SPECIAL DADO SPECIALE	SPEZIALMUTTER TUERCA ESPECIAL
7	4274219M1		**2**	PRESSURE VALVE	VALVE VALVOLA PRESSION	DRUCKVENTIL VALVULA PRESION

Front Axle 4 Wheel Drive **Essieu Avant 4 Roues Motrices** **Vorderachse-4wd** **Assale Anteriore 4 Ruote Motrici** **Doble Traccion De Eje Frontal**	**Mudguards And Supports** **Garde Boue Et Supports** **Radabdeckung Mit Stutze** **Parafanghi E Supporto** **Guardabarros Y Soporte**	**130-20**	**Pivoting** **Pivotant** **Luftpolsterungssitz** **Girando** **Redondo**

1-WK14-016-B

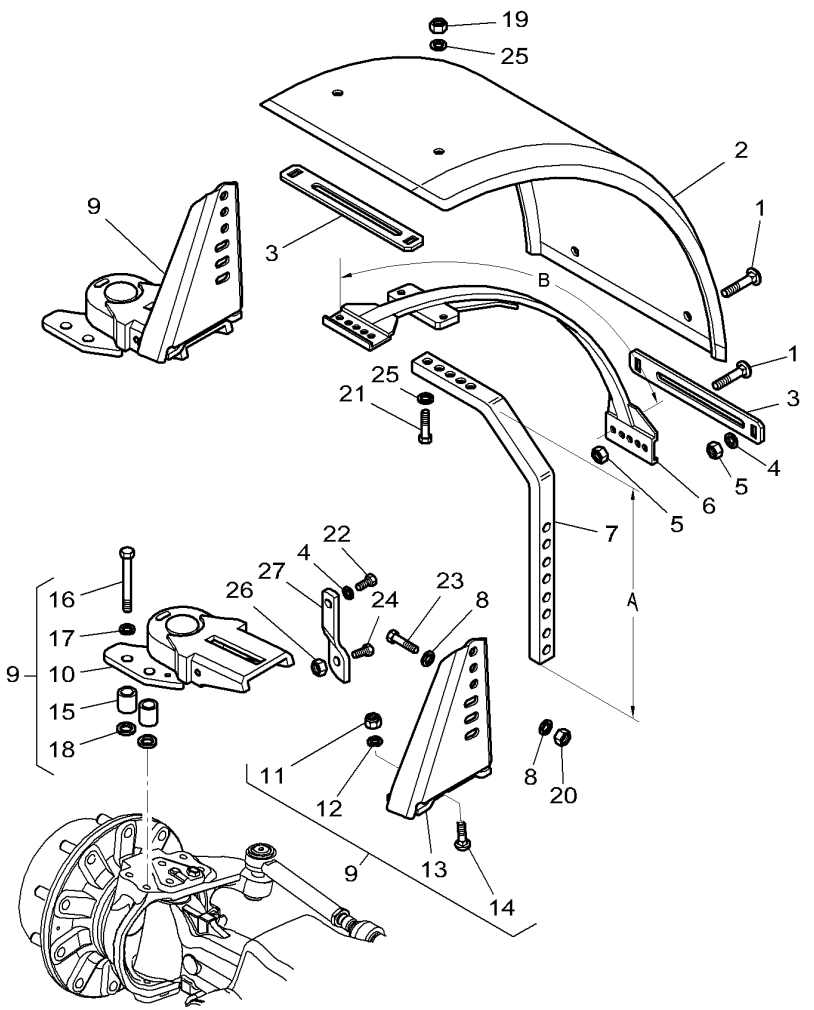

1	390809X1	M10 X 25	**12**	SCREW SPECIAL	VIS SPECIALE VITE SPECIALE	SPEZIALSCHRAUBE TORNILLO ESPEC.
2*	3619229M2	⧓ 470 MM	**2**	FENDER	AILE PARAFANGO.	SCHUTZBLECH GUARDABARROS.
3*	3777586M2	◀▶ 340 mm	**4**	PLATE	PLAQUE PIASTRA	PLATTE PLATO
4	390734X1	∅ 10-21 X 2	**14**	FLAT WASHER	RONDELLE PLATE RONDELLE PIANA	UNTERLEGSCHEIBEN ARANDELA PLANA
5	339402X1	M10	**12**	NUT SPECIAL	ECROU SPECIAL DADO SPECIALE	SPEZIALMUTTER TUERCA ESPECIAL
6*	3789029M1	B = 1167 MM	**2**	SAFETY FRAME	CADRE DE SECURIT TELAIO SICUREZZA	SICHERHE. RAHMEN CUADRO SEGURIDAD
7*	4285025M1	A = 517 MM	**2**	ARM	BRAS BRACCIO	SCHARHEBEL BRAZO
8	390735X1	∅ 12-24 X 2,5	**8**	FLAT WASHER	RONDELLE PLATE RONDELLE PIANA	UNTERLEGSCHEIBEN ARANDELA PLANA
9	4273474M92	▶	**1**	PIVOT	PIVOT CARDINE	DREHZAPFEN. PIVOTE
9	4273475M92	◀	**1**	PIVOT	PIVOT CARDINE	DREHZAPFEN. PIVOTE
10	4273668M2	9 ▶ 👁 130-25 No 1	**1**	PIVOT	PIVOT CARDINE	DREHZAPFEN. PIVOTE
10	4273669M2	9 ◀ 👁 130-25 No 1	**1**	PIVOT	PIVOT CARDINE	DREHZAPFEN. PIVOTE
11	4273673M1	9 M18	**1**	NUT	ECROU DADO	MUTTER TUERCA
12	4273674M1	9	**1**	WASHER	RONDELLE RONDELLA	SCHEIBE ARANDELA
13	4273670M1	9 ◀	**1**	SUPPORT	SUPPORT SOPPORTO	TRAGER SOPORTE
13	4273671M1	9 ▶	**1**	SUPPORT	SUPPORT SOPPORTO	TRAGER SOPORTE
14	4273672M1	9	**1**	SCREW	VIS VITE	SCHRAUBE TORNILLO
15*	3011172X1	[B] ➡| P341029 ∅ 17-32 X 30	**4**	SPACER	ENTRETOISE DISTANZIALE	ABSTANDSTUECK DISCO ESPACIADOR
15*	4282836M1	9 ➡| P341030 ∅ 19-30 X 30	**4**	SPACER	ENTRETOISE DISTANZIALE	ABSTANDSTUECK DISCO ESPACIADOR
16*	391889X1	[B] ➡| P341029 M16 X 70	**8**	HEX. SOCK. SCREW	VIS TETE HEX VITE PARKER	ZYLINDERSCHRAUBE TORN.CAB.HUECA
16*	339881X1	[B] ➡| P341029 M16 X 60	**8**	HEX. SOCK. SCREW	VIS TETE HEX VITE PARKER	ZYLINDERSCHRAUBE TORN.CAB.HUECA
16*	3002877X1	9 ➡| P341030 M16 X 65	**4**	HEX. SOCK. SCREW	VIS TETE HEX VITE PARKER	ZYLINDERSCHRAUBE TORN.CAB.HUECA
17	1441664X1	9	**4**	FLAT WASHER	RONDELLE PLATE RONDELLE PIANA	UNTERLEGSCHEIBEN ARANDELA PLANA
18*	3015484X1	9 ➡| P341030	**4**	O RING	JOINT TORIQUE GIUNTO DI TENUTA	O-RING JUNTA TOROIDAL

Front Axle 4 Wheel Drive **Essieu Avant 4 Roues Motrices** **Vorderachse-4wd** **Assale Anteriore 4 Ruote Motrici** **Doble Traccion De Eje Frontal**	**Mudguards And Supports** **Garde Boue Et Supports** **Radabdeckung Mit Stutze** **Parafanghi E Supporto** **Guardabarros Y Soporte**	**130-20**	**Pivoting** **Pivotant** **Luftpolsterungssitz** **Girando** **Redondo**

1-WK14-016-B

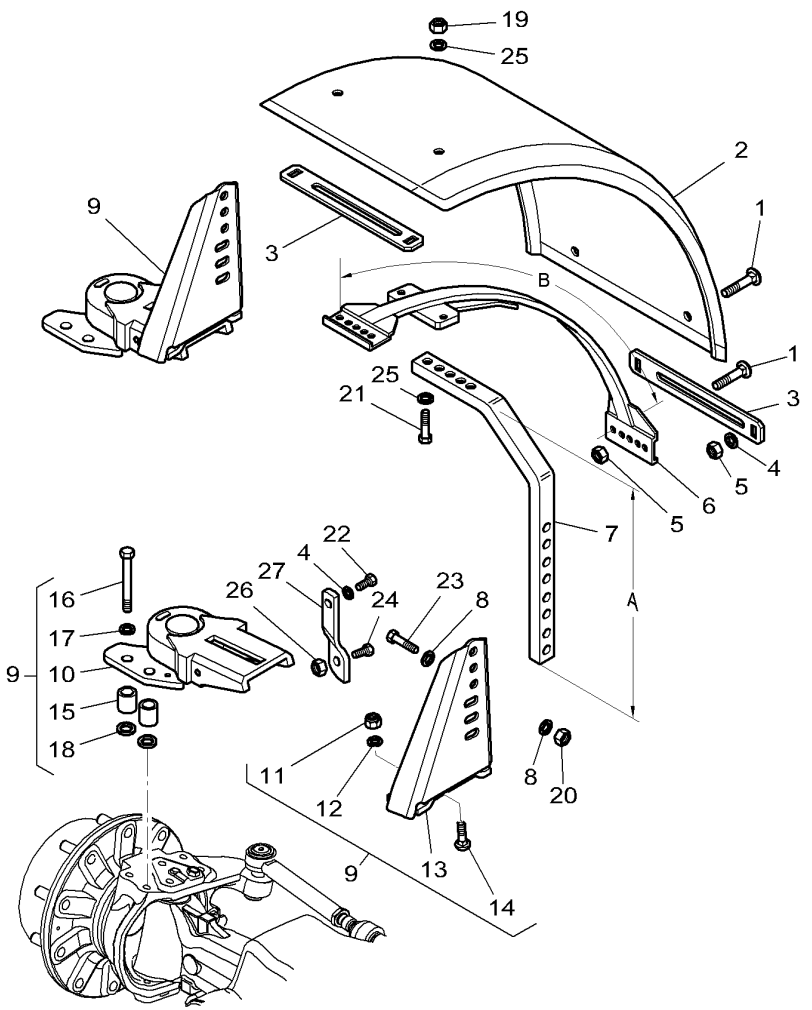

19	1442190X1	M12	**4**	LOCKNUT	ECROU FREIN AUTOBLOCCANTE	SICHERUNGSMUTTER CONTRATUERCA
20	1442190X1	M12	**4**	LOCKNUT	ECROU FREIN AUTOBLOCCANTE	SICHERUNGSMUTTER CONTRATUERCA
21	1441226X1	M12 X 40	**4**	HEX. SOCK. SCREW	VIS TETE HEX VITE PARKER	ZYLINDERSCHRAUBE TORN.CAB.HUECA
22	1441302X1	M10 X 30	**2**	HEX. SOCK. SCREW	VIS TETE HEX VITE PARKER	ZYLINDERSCHRAUBE TORN.CAB.HUECA
23	3009510X1	M12 X 50	**4**	HEX. SOCK. SCREW	VIS TETE HEX VITE PARKER	ZYLINDERSCHRAUBE TORN.CAB.HUECA
24*	1440716X1	M12 x 30	**2**	HEX. SOCK. SCREW	VIS TETE HEX VITE PARKER	ZYLINDERSCHRAUBE TORN.CAB.HUECA
24*	3010763X1	M12 X 60	**2**	HEX. SOCK. SCREW	VIS TETE HEX VITE PARKER	ZYLINDERSCHRAUBE TORN.CAB.HUECA
25	1441664X1	∅ 16-30 X 3	**8**	FLAT WASHER	RONDELLE PLATE RONDELLE PIANA	UNTERLEGSCHEIBEN ARANDELA PLANA
26	339054X1	M12	**2**	NUT SPECIAL	ECROU SPECIAL DADO SPECIALE	SPEZIALMUTTER TUERCA ESPECIAL
27*	4280475M1	◀	**1**	STRAP	PATTE CORREGGIA	LASCHE FAJA
27*	4280473M1	▶	**1**	STRAP	PATTE CORREGGIA	LASCHE FAJA

[B] NOT INCLUDED IN ASSEMBLY
N'EST PAS COMPRIS DANS L'ENSEMBLE
NICHT IN MONTAGEGRUPPE ENTHALTEN IST
NON E COMPRESO IN COMPLESSIVO
NO SE INCLUYE EN GRUPO MONAJE

Front Axle 4 Wheel Drive Essieu Avant 4 Roues Motrices Vorderachse-4wd Assale Anteriore 4 Ruote Motrici Doble Traccion De Eje Frontal	Mudguards And Supports Garde Boue Et Supports Radabdeckung Mit Stutze Parafanghi E Supporto Guardabarros Y Soporte	130-25	Pivoting Pivotant Luftpolsterungssitz Girando Redondo

1-WK14-013-A

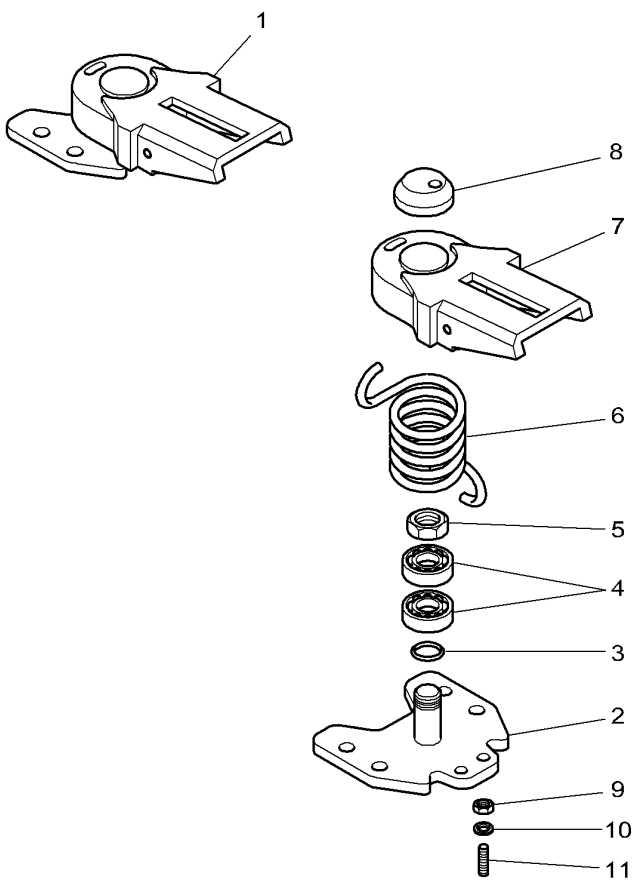

1*	4273669M2	◀	**1**	PIVOT	PIVOT CARDINE	DREHZAPFEN. PIVOTE
1*	4273668M2	▶	**1**	PIVOT	PIVOT CARDINE	DREHZAPFEN. PIVOTE
2		1 REF. 1	**1**	PEDESTAL	SOCLE PIEDISTALLO	SOCKEL PEDESTAL
3	3903902M1	1	**1**	GASKET	JOINT GIUNTO PIANO	FLACHDICHTUNG JUNTA PLANA
4*	3010151X91	1	**2**	BEARING TAPER	ROULEMNT CONIQUE CUSCINETTO CONIC	KEGELLAGER RODAMIENTO CONI
5	3015395X1	1 M25 x 1,5	**1**	LOCKNUT	ECROU FREIN AUTOBLOCCANTE	SICHERUNGSMUTTER CONTRATUERCA
6	3903899M1	1 ◀	**1**	SPRING	RESSORT MOLLA	FEDER MUELLE
6	3903898M1	1 ▶	**1**	SPRING	RESSORT MOLLA	FEDER MUELLE
7		1 REF .1	**1**	COVER	COUVERCLE COPERCHIO	ABDECKUNG. CUBIERTA
8	3907555M1	1	**1**	COVER	COUVERCLE COPERCHIO	ABDECKUNG. CUBIERTA
9	339070X1	1	**1**	NUT	ECROU DADO	MUTTER TUERCA
10	390973X1	1	**1**	WASHER METRIC	RONDELLE METR. RONDELLA METRICO	SCHEIBE METRISCH ARANDELA METRICO
11	F718701030070	1 M14 X 1,5	**1**	GRUB SCREW	VIS SANS TETE VITE SENZA TESTA	GEWINDESTIFT TORNILLO SIN CAB

Front Axle 4 Wheel Drive **Essieu Avant 4 Roues Motrices** **Vorderachse-4wd** **Assale Anteriore 4 Ruote Motrici** **Doble Traccion De Eje Frontal**	**Mudguards And Supports** **Garde Boue Et Supports** **Radabdeckung Mit Stutze** **Parafanghi E Supporto** **Guardabarros Y Soporte**	**130-30**	**Pivoting** **Pivotant** **Luftpolsterungssitz** **Girando** **Redondo**

1-WK14-012-D

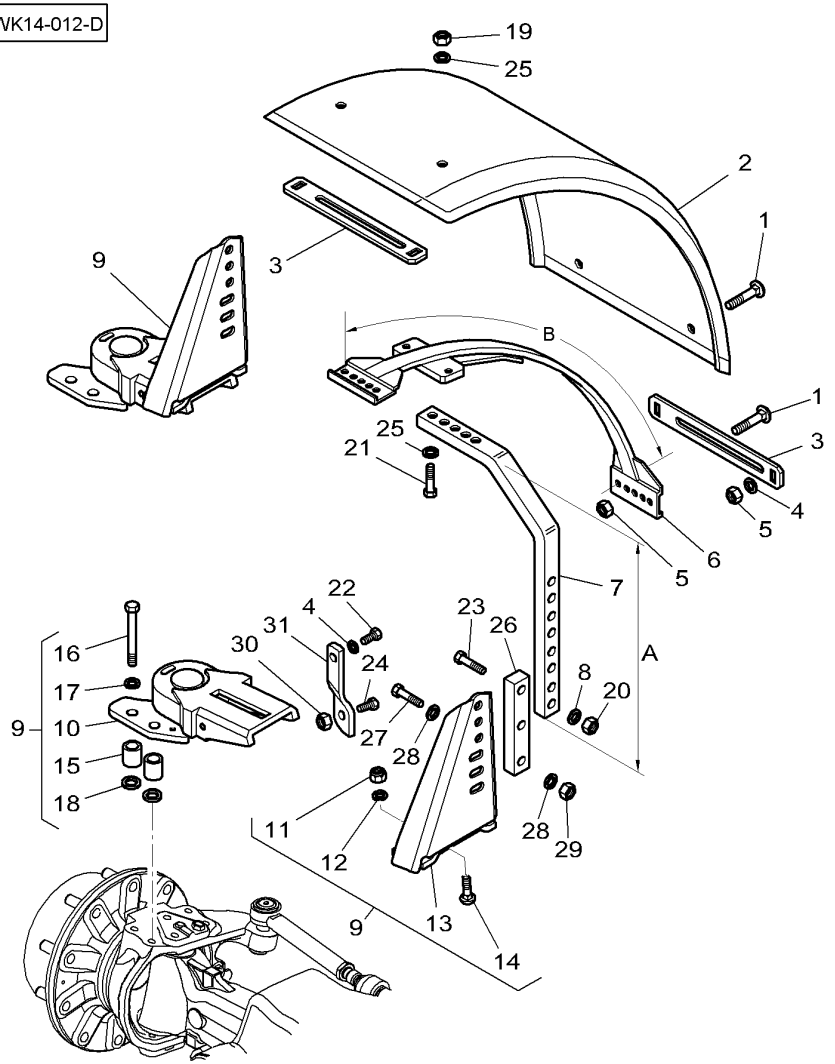

1	390809X1	M10 X 25		**12**	SCREW SPECIAL	VIS SPECIALE VITE SPECIALE	SPEZIALSCHRAUBE TORNILLO ESPEC.
2*	3619229M2	▶◀ 470 mm		**2**	FENDER	AILE PARAFANGO.	SCHUTZBLECH GUARDABARROS.
2*	3779567M1	▶◀ 520 mm		**2**	FENDER	AILE PARAFANGO.	SCHUTZBLECH GUARDABARROS.
2*	3780467M1	▶◀ 620 mm		**2**	FENDER	AILE PARAFANGO.	SCHUTZBLECH GUARDABARROS.
3	3777586M2	◀▶ 340 mm		**4**	PLATE	PLAQUE PIASTRA	PLATTE PLATO
3*	3777587M2	◀▶ 400 mm		**4**	PLATE	PLAQUE PIASTRA	PLATTE PLATO
3*	3780468M2	◀▶ 448 mm		**4**	PLATE	PLAQUE PIASTRA	PLATTE PLATO
4	390734X1	∅ 10-21 X 2		**14**	FLAT WASHER	RONDELLE PLATE RONDELLE PIANA	UNTERLEGSCHEIBEN ARANDELA PLANA
5*	339402X1	M10		**12**	NUT SPECIAL	ECROU SPECIAL DADO SPECIALE	SPEZIALMUTTER TUERCA ESPECIAL
6*	3784948M1	B =1045mm		**2**	SAFETY FRAME	CADRE DE SECURIT TELAIO SICUREZZA	SICHERHE. RAHMEN CUADRO SEGURIDAD
7*	4285025M1	A = 517 mm		**2**	ARM	BRAS BRACCIO	SCHARHEBEL BRAZO
8	390735X1	∅ 12-24 X 2,5		**8**	FLAT WASHER	RONDELLE PLATE RONDELLE PIANA	UNTERLEGSCHEIBEN ARANDELA PLANA
9	4273474M92	▶		**1**	PIVOT	PIVOT CARDINE	DREHZAPFEN. PIVOTE
9	4273475M92	◀		**1**	PIVOT	PIVOT CARDINE	DREHZAPFEN. PIVOTE
10	4273668M2	9 ▶	130-25 No 1	**1**	PIVOT	PIVOT CARDINE	DREHZAPFEN. PIVOTE
10	4273669M2	9 ◀	130-25 No 1	**1**	PIVOT	PIVOT CARDINE	DREHZAPFEN. PIVOTE
11	4273673M1	9 M18		**1**	NUT	ECROU DADO	MUTTER TUERCA
12	4273674M1	9		**1**	WASHER	RONDELLE RONDELLA	SCHEIBE ARANDELA
13	4273670M1	9 ◀		**1**	SUPPORT	SUPPORT SOPPORTO	TRAGER SOPORTE
13	4273671M1	9 ▶		**1**	SUPPORT	SUPPORT SOPPORTO	TRAGER SOPORTE
14	4273672M1	9		**1**	SCREW	VIS VITE	SCHRAUBE TORNILLO
15*	4282836M1	9 ∅ 19-30 X 30		**4**	SPACER	ENTRETOISE DISTANZIALE	ABSTANDSTUECK DISCO ESPACIADOR
16*	3002877X1	9 M16 X 65		**4**	HEX. SOCK. SCREW	VIS TETE HEX VITE PARKER	ZYLINDERSCHRAUBE TORN.CAB.HUECA
17	1441664X1	9		**4**	FLAT WASHER	RONDELLE PLATE RONDELLE PIANA	UNTERLEGSCHEIBEN ARANDELA PLANA
18*	3015484X1	9		**4**	O RING	JOINT TORIQUE GIUNTO DI TENUTA	O-RING JUNTA TOROIDAL
19	1442190X1	M12		**4**	LOCKNUT	ECROU FREIN AUTOBLOCCANTE	SICHERUNGSMUTTER CONTRATUERCA

Front Axle 4 Wheel Drive Essieu Avant 4 Roues Motrices Vorderachse-4wd Assale Anteriore 4 Ruote Motrici Doble Traccion De Eje Frontal	Mudguards And Supports Garde Boue Et Supports Radabdeckung Mit Stutze Parafanghi E Supporto Guardabarros Y Soporte	**130-30**	Pivoting Pivotant Luftpolsterungssitz Girando Redondo

1-WK14-012-D

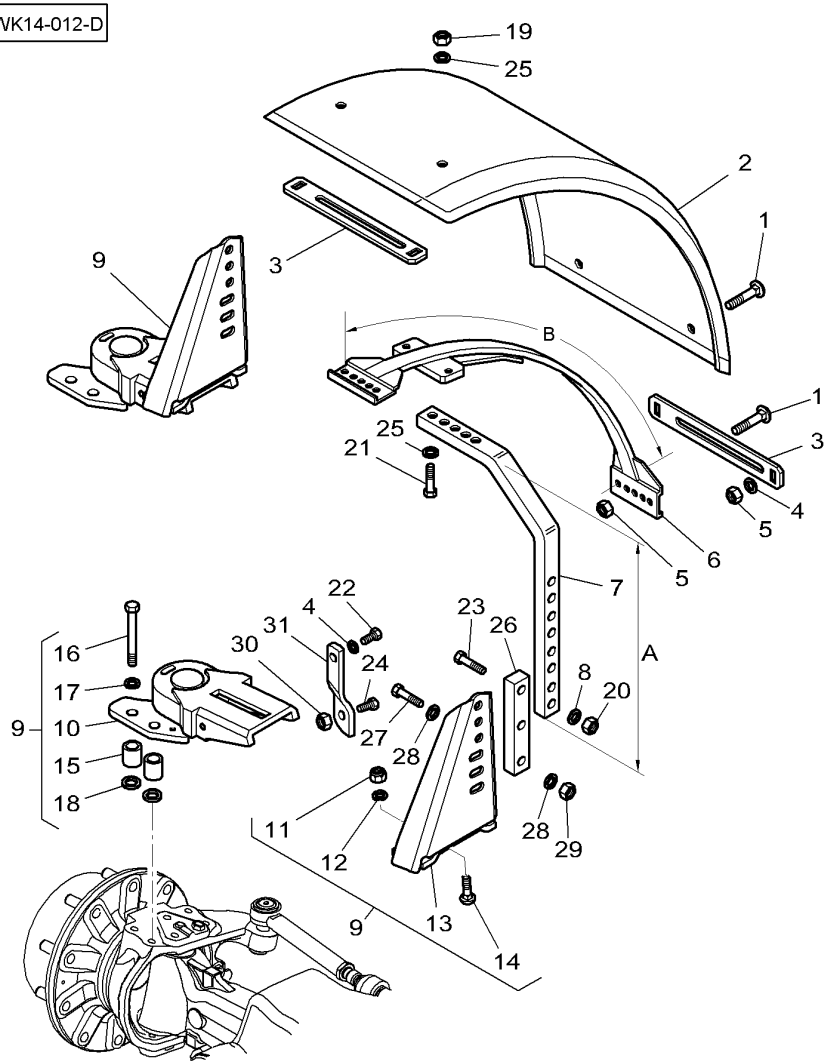

20	1442190X1	M12	**4**	LOCKNUT	ECROU FREIN AUTOBLOCCANTE	SICHERUNGSMUTTER CONTRATUERCA
21	1441226X1	M12 X 40	**4**	HEX. SOCK. SCREW	VIS TETE HEX VITE PARKER	ZYLINDERSCHRAUBE TORN.CAB.HUECA
22	1441302X1	M10 X 30	**2**	HEX. SOCK. SCREW	VIS TETE HEX VITE PARKER	ZYLINDERSCHRAUBE TORN.CAB.HUECA
23	3009510X1	M12 X 50	**4**	HEX. SOCK. SCREW	VIS TETE HEX VITE PARKER	ZYLINDERSCHRAUBE TORN.CAB.HUECA
24*	3010763X1	M12 X 60	**2**	HEX. SOCK. SCREW	VIS TETE HEX VITE PARKER	ZYLINDERSCHRAUBE TORN.CAB.HUECA
25	1441664X1	∅ 16-30 X 3	**8**	FLAT WASHER	RONDELLE PLATE RONDELLE PIANA	UNTERLEGSCHEIBEN ARANDELA PLANA
26	3777716M1		**2**	SPACER	ENTRETOISE DISTANZIALE	ABSTANDSTUECK DISCO ESPACIADOR
27	3009516X1	M12 X 90	**4**	HEX. SOCK. SCREW	VIS TETE HEX VITE PARKER	ZYLINDERSCHRAUBE TORN.CAB.HUECA
28*	390735X1		**8**	FLAT WASHER	RONDELLE PLATE RONDELLE PIANA	UNTERLEGSCHEIBEN ARANDELA PLANA
29*	1442190X1	M12	**4**	LOCKNUT	ECROU FREIN AUTOBLOCCANTE	SICHERUNGSMUTTER CONTRATUERCA
30	339054X1	M12	**2**	NUT SPECIAL	ECROU SPECIAL DADO SPECIALE	SPEZIALMUTTER TUERCA ESPECIAL
31	4280475M1	◀	**1**	STRAP	PATTE CORREGGIA	LASCHE FAJA
31	4280473M1	▶	**1**	STRAP	PATTE CORREGGIA	LASCHE FAJA

Rear Wheels
Roues Arriere
Hinterraeder
Ruote Posteriori
Ruedas Traseras

130-35

Wheel Hub 10 Holes Assembling
Moyeu De Roues 10 Trous De Fixation
Radnabe 10 Loch Befestigung
Mozzo Ruote 10 Foros Fissazione
Cubo Rueda 10 Orificios Fijacion

1-WM01-009-A

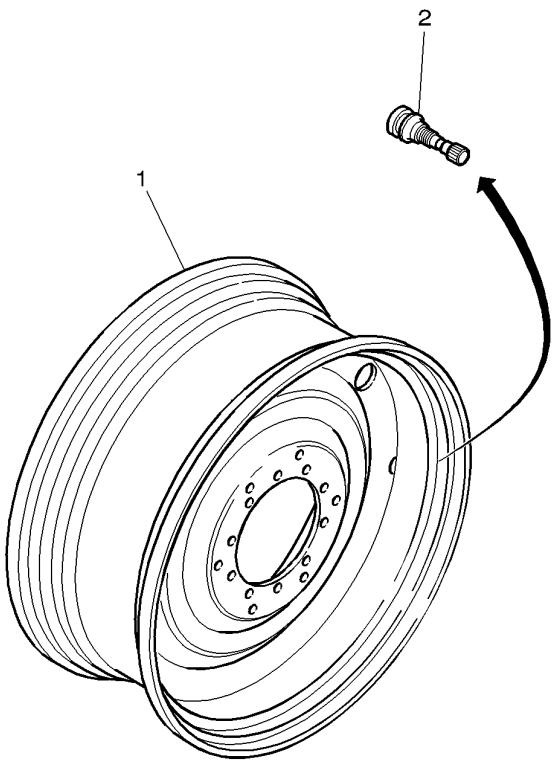

1*	3788574M2	[A] DWW 27A X 42"	**2**	WHEEL RIM	JANTE CERCHIONE	FELGE LLANTA
1	4280632M1	[A] DWL 15L X 50"	**2**	WHEEL RIM	JANTE CERCHIONE	FELGE LLANTA
2	4274219M1		**2**	PRESSURE VALVE	VALVE VALVOLA PRESSION	DRUCKVENTIL VALVULA PRESION

[A] CAN BE TWINED FITTED
PEUT ETRE MONTEE JUMELEE
KANN DOPPLEMONTIERT SEIN
PUO ESSARE ACCOPIARE
SE PUEDE EMPAREJA

Rear Wheels
Roues Arriere
Hinterraeder
Ruote Posteriori
Ruedas Traseras

130-40

Wheel Hub 10 Holes Assembling
Moyeu De Roues 10 Trous De Fixation
Radnabe 10 Loch Befestigung
Mozzo Ruote 10 Foros Fissazione
Cubo Rueda 10 Orificios Fijacion

1-WM01-008-B

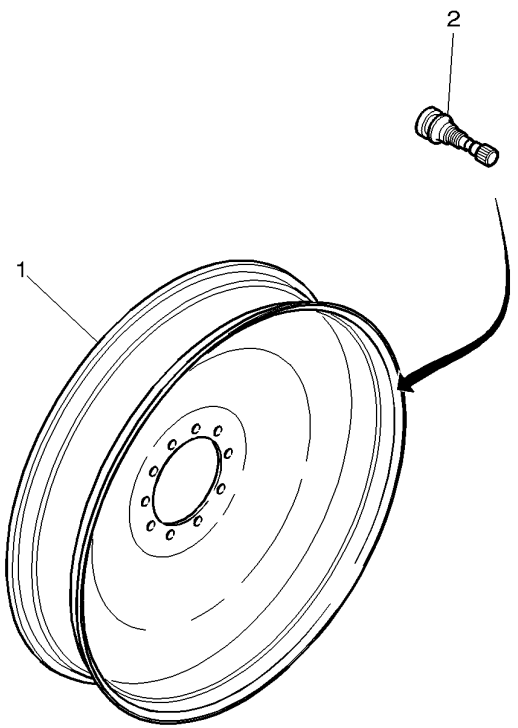

1*	4271729M1	W10 X 54"	**2**	WHEEL RIM	JANTE CERCHIONE LLANTA FELGE
2	4274219M1		**2**	PRESSURE VALVE	VALVE VALVOLA PRESSION DRUCKVENTIL VALVULA PRESION

Rear Wheels
Roues Arriere
Hinterraeder
Ruote Posteriori
Ruedas Traseras

130-45

Wheel Hub 10 Holes Assembling
Moyeu De Roues 10 Trous De Fixation
Radnabe 10 Loch Befestigung
Mozzo Ruote 10 Foros Fissazione
Cubo Rueda 10 Orificios Fijacion

1-WM01-004-C

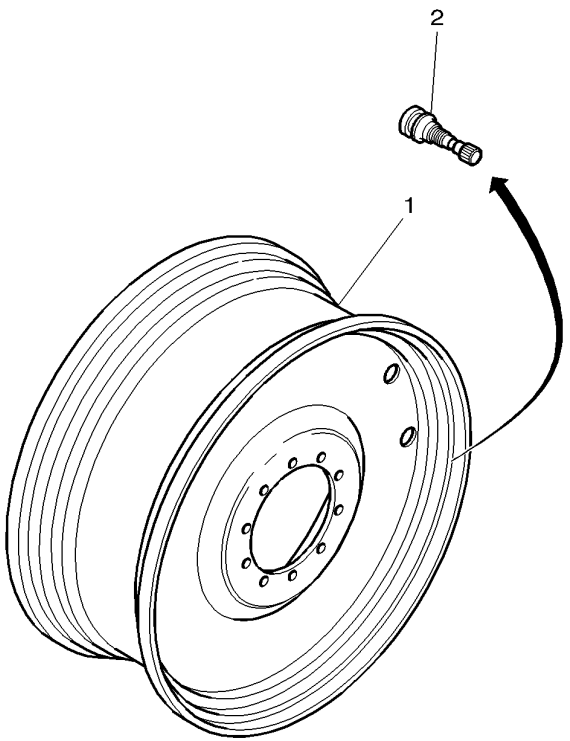

1*	3781972M3	[C] DWW 23A X 38"	**2** WHEEL RIM	JANTE CERCHIONE	FELGE LLANTA
1*	3787712M2	[GJ] W 13 X 46"	**2** WHEEL RIM	JANTE CERCHIONE	FELGE LLANTA
1*	3781982M3	[J] DD 16 X 46"	**2** WHEEL RIM	JANTE CERCHIONE	FELGE LLANTA
2	4274219M1		**2** PRESSURE VALVE	VALVE VALVOLA PRESSION	DRUCKVENTIL VALVULA PRESION

[C] USED WITH TYRES : 650/85R38 - 710/70R38
UTILISE AVEC PNEUS : 650/85R38 - 710/70R38
BENUTZT MIT REIFEN : 650/85R38 - 710/70R38
UTILIZZATO CON PNEUMATICI : 650/85R38 - 710/70R38
UTILIZADO CON NEUMATICOS : 650/85R38 - 710/70R38

[G] USED WITH TYRES : 19,90" X 46"
UTILISE AVEC PNEUS : 19,90" X 46"
BENUTZT MIT REIFEN : 19,90" X 46"
UTILIZZATO CON PNEUMATICI : 19,90" X 46"
UTILIZADO CON NEUMATICOS : 19,90" X 46"

[J] CAN BE TWINED FITTED
PEUT ETRE MONTEE JUMELEE
KANN DOPPLEMONTIERT SEIN
PUO ESSARE ACCOPIARE
SE PUEDE EMPAREJA

Rear Wheels
Roues Arriere
Hinterraeder
Ruote Posteriori
Ruedas Traseras

130-50

Wheel Hub 10 Holes Assembling
Moyeu De Roues 10 Trous De Fixation
Radnabe 10 Loch Befestigung
Mozzo Ruote 10 Foros Fissazione
Cubo Rueda 10 Orificios Fijacion

1-WM01-016-A

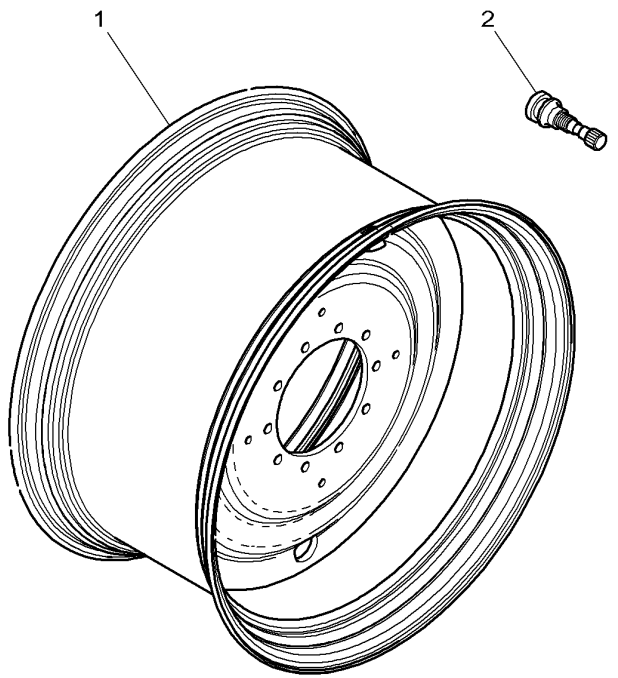

1*	4287641M1	DW 23A X 42"	**2**	WHEEL RIM	JANTE CERCHIONE LLANTA FELGE
2*	4274219M1		**2**	PRESSURE VALVE	VALVE VALVOLA PRESSION DRUCKVENTIL VALVULA PRESION

Rear Wheels
Roues Arriere
Hinterraeder
Ruote Posteriori
Ruedas Traseras

130-55

1-WM01-014-A

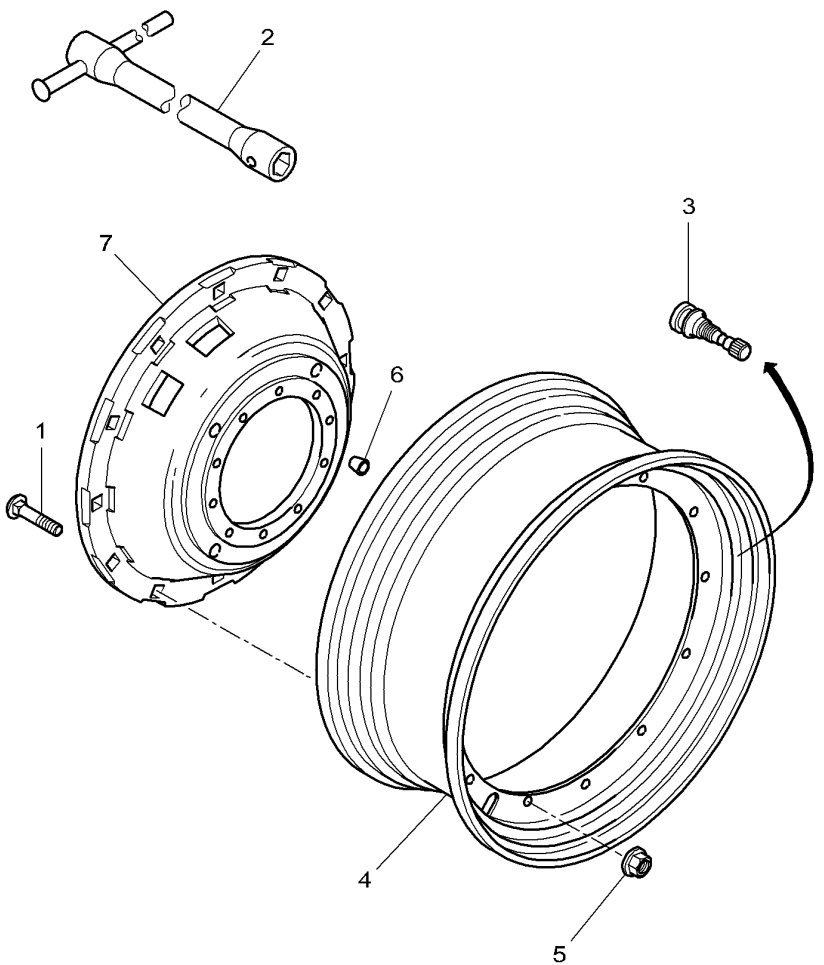

1 *	**920700180070**	M18 X 95	**24**	SCREW	VIS VITE	SCHRAUBE TORNILLO
2	3386406M1		**1**	SPANNER	CLE CHIAVE	SCHR.SCHLUESSEL LLAVE DE RUEDA
3	4274219M1		**2**	PRESSURE VALVE	VALVE VALVOLA PRESSION	DRUCKVENTIL VALVULA PRESION
4 *	3782154M2	DWW 23A X 38"	**2**	WHEEL RIM	JANTE CERCHIONE	FELGE LLANTA
4 *	4280633M1	[J] DWL 15L X 50"	**2**	WHEEL RIM	JANTE CERCHIONE	FELGE LLANTA
4 *	3787713M1	[AFG] W 13 X 46"	**2**	WHEEL RIM	JANTE CERCHIONE	FELGE LLANTA
4 *	3782157M2	[BF] DD 16 X 46"	**2**	WHEEL RIM	JANTE CERCHIONE	FELGE LLANTA
4 *	3782155M1	[CF] DWW 18L X 42"	**2**	WHEEL RIM	JANTE CERCHIONE	FELGE LLANTA
4 *	4287642M1	DW 23A X 42"	**2**	WHEEL RIM	JANTE CERCHIONE	FELGE LLANTA
5 *	**920700180080**	M18	**24**	NUT	ECROU DADO	MUTTER TUERCA
6	3780302M1		**8**	DOWEL	PLOT SPINA	ZYLINDERSTIFT CENTRAJE
7	3716108M3	38" 209 KG	**1**	DISC	DISQUE DISCO	SCHEIBE DISCO

[A] WITH RIM 3716108M3 CAN BE TWINED FITTED WITH WHEEL 3787712M1
AVEC VOILE 3716108M3 PEUT ETRE JUMELEE AVEC JANTE 3787712M1
MIT RADSCHUESSEL 3716108M3 KANN MIT FELGE 3787712M1 DOPPLEMONTIERT SEIN
CON CERCHIONE 3716108M3 PUO ESSARE ACCOPIARE CON RUOTA 3787712M1
CON LLANTA 3716108M3 SE PUEDE EMPAREJA CON RUEDA 3787712M1

[B] WITH RIM 3716108M3 CAN BE TWINED FITTED WITH WHEEL 3781982M3
AVEC VOILE 3716108M3 PEUT ETRE JUMELEE AVEC JANTE 3781982M3
MIT RADSCHUESSEL 3716108M3 KANN MIT FELGE 3781982M3 DOPPLEMONTIERT SEIN
CON CERCHIONE 3716108M3 PUO ESSARE ACCOPIARE CON RUOTA 3781982M3
CON LLANTA 3716108M3 SE PUEDE EMPAREJA CON RUEDA 3781982M3

[C] WITH RIM 3716108M3 CAN BE TWINED FITTED WITH WHEEL 3781969M3
AVEC VOILE 3716108M3 PEUT ETRE JUMELEE AVEC JANTE 3781969M3
MIT RADSCHUESSEL 3716108M3 KANN MIT FELGE 3781969M3 DOPPLEMONTIERT SEIN
CON CERCHIONE 3716108M3 PUO ESSARE ACCOPIARE CON RUOTA 3781969M3
CON LLANTA 3716108M3 SE PUEDE EMPAREJA CON RUEDA 3781969M3

[F] WITH RIM 3716108M3 CAN BE TWINED FITTED
AVEC VOILE 3716108M3 PEUT ETRE JUMELEE
MIT RADSCHUESSEL 3716108M3 KANN DOPPLEMONTIERT SEIN
CON CERCHIONE 3716108M3 PUO ESSARE ACCOPIARE
CON LLANTA 3716108M3 SE PUEDE EMPAREJA

[G] WITH RIM 3582139M4+3615370M3 CAN BE TWINED FITTED
AVEC VOILE 3582139M4+3615370M3 PEUT ETRE JUMELEE
MIT RADSCHUESSEL 3582139M4+3615370M3 KANN DOPPLEMONTIERT SEIN
CON CERCHIONE 3582139M4+3615370M3 PUO ESSARE ACCOPIARE
CON LLANTA 3582139M4+3615370M3 SE PUEDE EMPAREJA

1-WM01-014-A

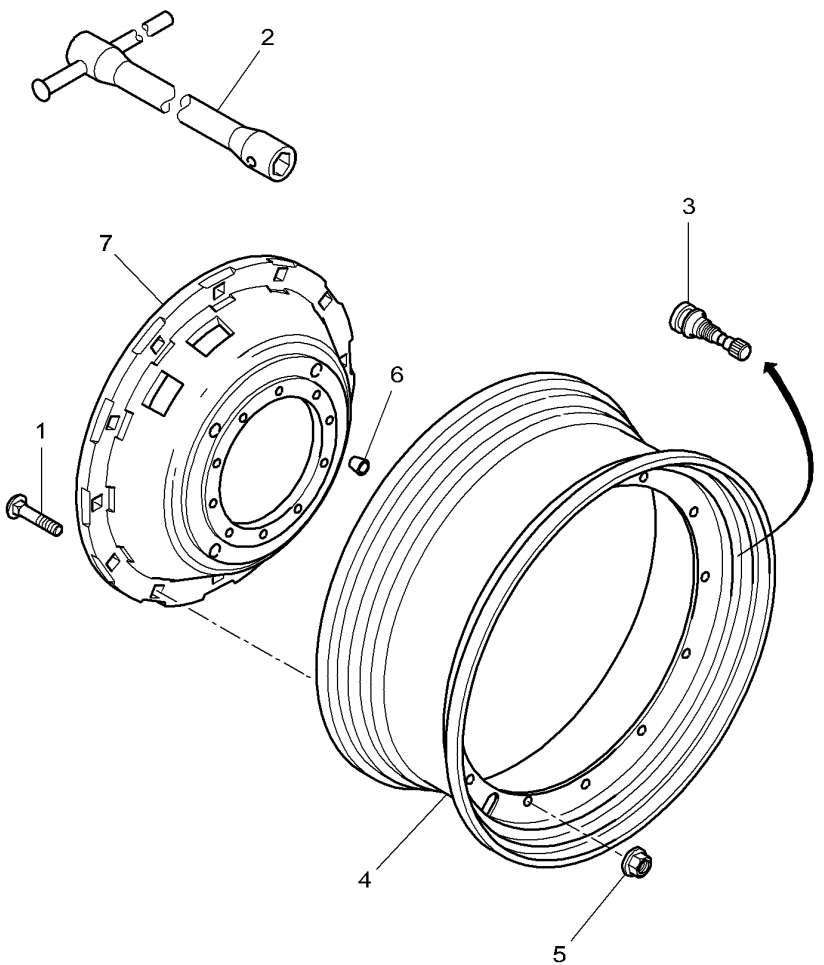

[J] WITH RIM 3716108M3 CAN BE TWINED FITTED WITH WHEEL 4280633M1
AVEC VOILE 3716108M3 PEUT ETRE JUMELEE AVEC JANTE 4280633M1
MIT RADSCHUESSEL 3716108M3 KANN MIT FELGE 4280633M1 DOPPLEMONTIERT SEIN
CON CERCHIONE 3716108M3 PUO ESSARE ACCOPIARE CON RUOTA 4280633M1
CON LLANTA 3716108M3 SE PUEDE EMPAREJA CON RUEDA 4280633M1

Rear Wheels **Roues Arriere** **Hinterraeder** **Ruote Posteriori** **Ruedas Traseras**	**Fixing By Cone** **Fixation Par Cone** **Anbau Der Konus** **Montaggio Con Cono** **Fijacion Con Cono**	**130-60**

Shaft Diameter 110 Mm / Cone/Wheel Hub Reversed
Arbre Diametre 110 Mm / Cone/Moyeu Inverse
Durchmesserwelle 110mm / Konus/Radnabegegenklarung
Albero Diametro 110 Mm / Cono/Mozzo Di Ruota Invertito
Palier Diametro 110mm / Cono/Cubo De Rueda Inverso

1-WM05-007-A

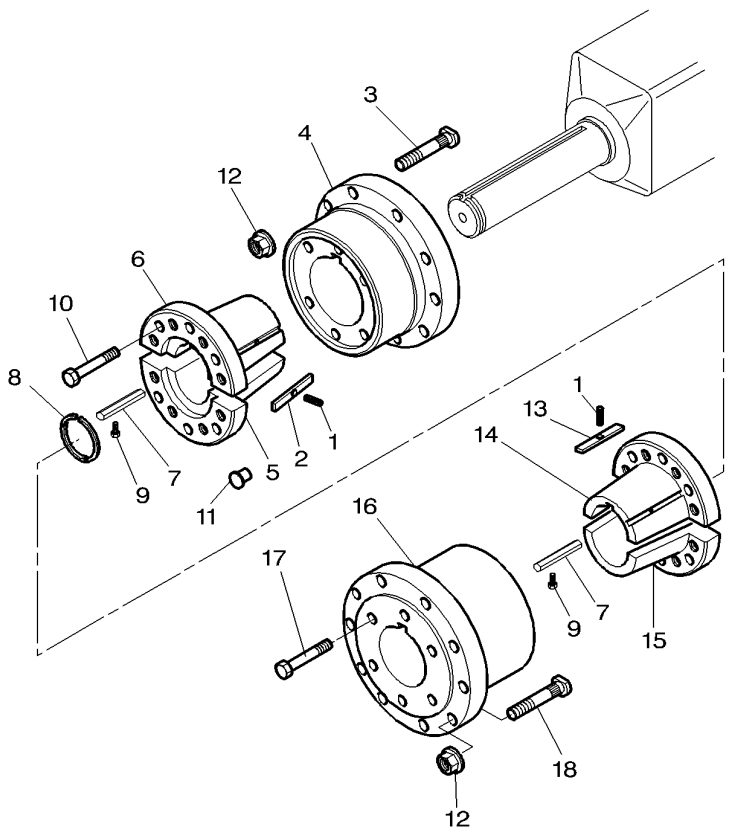

				●		SINGLE WHEELS	ROUES SIMPLES RUOTE SINGOLE	EINFACHRAEDER RUEDAS SENCILLAS
				●		DUAL WHEELS	ROUES JUMELEES RUOTE ACCOPIATE	ZWILLINGSRAEDER RUEDAS DOBLES
1	763786M1	∅ 3 X 19		**4**	**2**	PIN	GOUPILLE COPPIGLIA	STIFT PASADOR
2	509816M3			**2**	**2**	KEY	CLAVETTE CHIAVETTA	STELLKEIL CHAVETA
3*	3792488M2	[A] M22 X 78		**20**	**20**	STUD	GOUJON SPINOTTO FILETT.	STEHBOLZEN ESPARRAGO ROSCA.
3	**3716105M2**	[B] M22 X 100		**20**	**20**	STUD	GOUJON SPINOTTO FILETT.	STEHBOLZEN ESPARRAGO ROSCA.
4	3716107M2			**2**	**2**	HUB	MOYEU MOZZO	NABE CUBO
5	3716269M1	◀▶ 198 MM		**2**	**2**	CONE	CONE CONO	KONUS CONO
6	3716268M1	◀▶ 198 MM		**2**	**2**	CONE	CONE CONO	KONUS CONO
7	3716106M4			**4**	**2**	KEY	CLAVETTE CHIAVETTA	STELLKEIL CHAVETA
8	3010765X1			**4**	**2**	SNAPRING	SEGMENT ARRET ANELLO SIEGER	SPRENGRING ANILLA RETENCION
9	1440350X1	M6 X 20		**4**	**2**	SCREW METRIC	VIS METRIQUE VITE METRICA	SCHRAUBE METR TORNILLO METRICO
10	3010569X1	M20 X 80		**12**	**12**	HEX. SOCK. SCREW	VIS TETE HEX VITE PARKER	ZYLINDERSCHRAUBE TORN.CAB.HUECA
11	3791968M1			**16**	**16**	PLUG	BOUCHON TAPPO	STOPFEN TAPON
12	**3712611M2**	M22		**40**	**20**	NUT SPECIAL	ECROU SPECIAL DADO SPECIALE	SPEZIALMUTTER TUERCA ESPECIAL
13	3787102M1			**2**		KEY	CLAVETTE CHIAVETTA	STELLKEIL CHAVETA
14	3786847M1			**2**		CONE	CONE CONO	KONUS CONO
15	3786848M1			**2**		CONE	CONE CONO	KONUS CONO
16	3786490M1			**2**		HUB	MOYEU MOZZO	NABE CUBO
17	3580230M1	M20 X 190		**16**		HEX. SOCK. SCREW	VIS TETE HEX VITE PARKER	ZYLINDERSCHRAUBE TORN.CAB.HUECA
18	3792488M2	[A] M22 X 78		**20**		STUD	GOUJON SPINOTTO FILETT.	STEHBOLZEN ESPARRAGO ROSCA.

[A] WITH RIM STEEL
AVEC JANTE ACIER
MIT FELGE STAHL
CON CERCHIONE ACCIAID
CON LLANTA ACERO

Rear Wheels **Roues Arriere** **Hinterraeder** **Ruote Posteriori** **Ruedas Traseras**	**Fixing By Cone** **Fixation Par Cone** **Anbau Der Konus** **Montaggio Con Cono** **Fijacion Con Cono**	**130-60**	**Shaft Diameter 110 Mm / Cone/Wheel Hub Reversed** **Arbre Diametre 110 Mm / Cone/Moyeu Inverse** **Durchmesserwelle 110mm / Konus/Radnabegegenklarung** **Albero Diametro 110 Mm / Cono/Mozzo Di Ruota Invertito** **Palier Diametro 110mm / Cono/Cubo De Rueda Inverso**

1-WM05-007-A

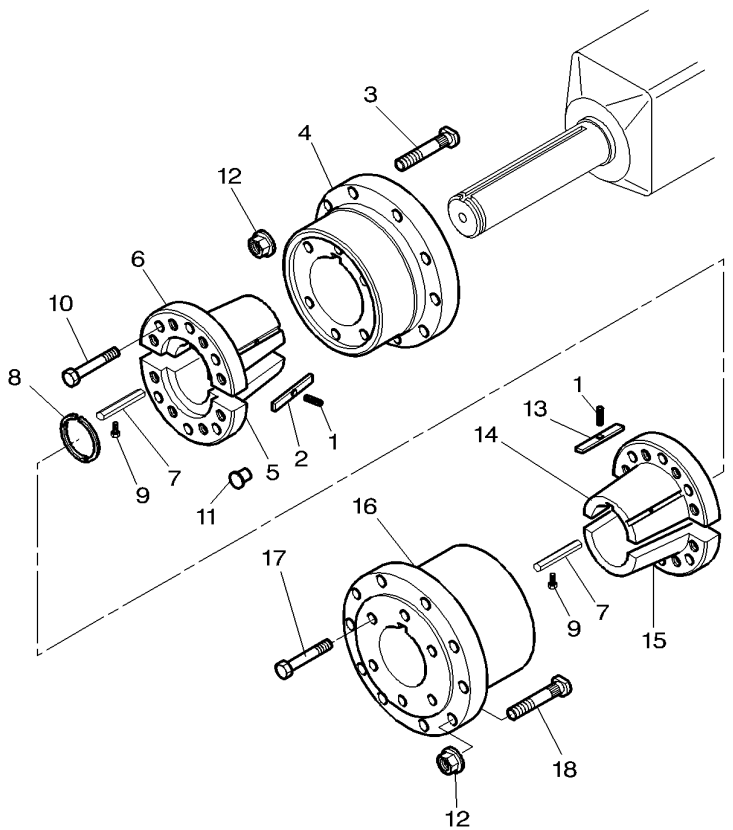

- ● SINGLE WHEELS — ROUES SIMPLES / RUOTE SINGOLE — EINFACHRAEDER / RUEDAS SENCILLAS
- ● DUAL WHEELS — ROUES JUMELEES / RUOTE ACCOPIATE — ZWILLINGSRAEDER / RUEDAS DOBLES

[B] WITH CAST WHEELS
AVEC ROUES FONTE
MIT GUSSFELGEN
CON RUOTA FUSA
CON RUEDAS DE FUNDICION

Wheel Weights
Masses De Roue
Radgewichte
Contrappesi Per Ruote
Pesos De Rueda

130-65

1-WX17-002-A

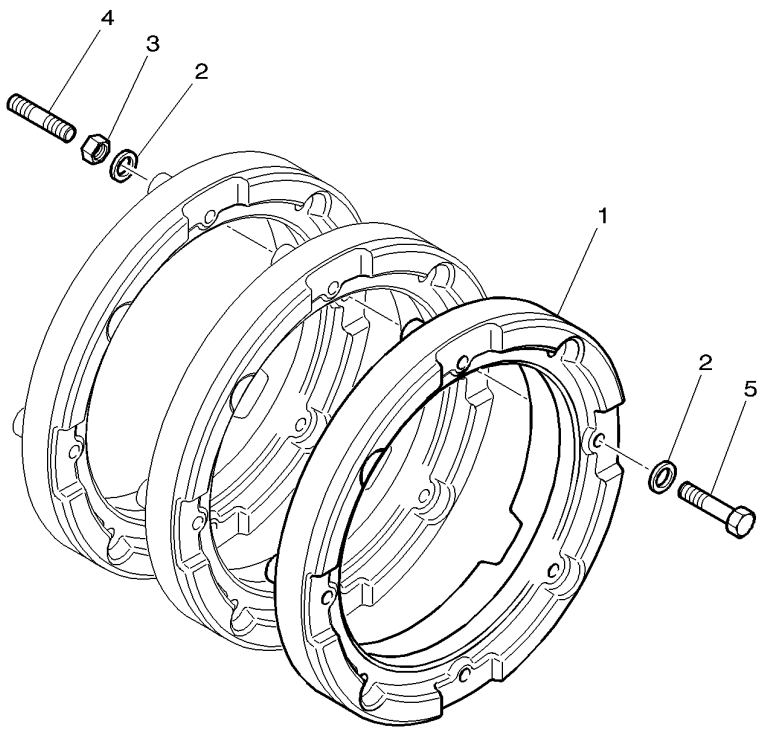

1*	3789077M1	[A] 50 KG	X	WEIGHT	MASSE PESO	GEWICHT PESO
1*	3789078M1	[A] 200 KG	X	WEIGHT	MASSE PESO	GEWICHT PESO
2	3019575X1	∅ 17-44 X 3	X	FLAT WASHER	RONDELLE PLATE RONDELLE PIANA	UNTERLEGSCHEIBEN ARANDELA PLANA
3	339034X1	M16	X	NUT	ECROU DADO	MUTTER TUERCA
4*	3386466M1	M16 X 65	X	STUD	GOUJON SPINOTTO FILETT.	STEHBOLZEN ESPARRAGO ROSCA.
4	3019877X1	M16-120 ➡ P207001	X	STUD	GOUJON SPINOTTO FILETT.	STEHBOLZEN ESPARRAGO ROSCA.
5	3015187X1	M16-130 ➡ P320001	X	HEX. SOCK. SCREW	VIS TETE HEX VITE PARKER	ZYLINDERSCHRAUBE TORN.CAB.HUECA
5*	3019868X1	M16 X 115	X	HEX. SOCK. SCREW	VIS TETE HEX VITE PARKER	ZYLINDERSCHRAUBE TORN.CAB.HUECA

[A] HOLES FIXING ON DIAMETER 456MM
TROUS DE FIXATION SUR DIAMETRE 456MM
LOCHERN FUER PACKDICHTE AUF DURCHMESSER 456MM
FORI PER FISSAGIO SU DIAMETRO 456MM
ORIFICIOS PARA FIJAR SOBRE DIAMETRO 456MM